ACCOSSATO Racing

2017



Racing STREET RACING TUBI FRENO BRAKE LINES PASTIGLIE BRAKE PADS dischi freno brake rotor LEVE LEVERS

ACCOSSATO

E-COMMERCE

Business-To-Business



www.accossato.eu

REGISTRATI E ORDINA
sul B2B ACCOSSATO

REGISTER & ORDER
on the ACCOSSATO B2B





AVVERTENZE / *WARNING*

PRODOTTI DA UTILIZZARE IN CIRCUITO CHIUSO

TUTTI I PRODOTTI DI QUESTO CATALOGO SONO PER USO AGONISTICO E UTILIZZABILI IN CIRCUITO CHIUSO. IL LORO UTILIZZO SU STRADE APERTE AL PUBBLICO È VIETATO. IL MONTAGGIO DEL PRODOTTO DEVE ESSERE EFFETTUATO DA OFFICINE O RIVENDITORI AUTORIZZATI ACCOSSATO.

ESCLUSIONE DI RESPONSABILITÀ

ACCOSSATO RACING OPPURE I SUOI RIVENDITORI SARANNO LIETI DI ASSISTERE I CLIENTI NELLA SCELTA DELLA FORNITURA ESATTA DEGLI ACCESSORI DI MONTAGGIO EVENTUALMENTE NECESSARI O DELLE VARIANTI TRA LE PARTI ADATTE PER LA PROPRIA MOTO.
ACCOSSATO RACING SI RISERVA IL DIRITTO, SENZA PREAVVISO E SENZA FORNIRNE I MOTIVI, DI MODIFICARE SPECIFICHE TECNICHE, COLORI, MATERIALI, DI CANCELLARLI SENZA SOSTITUIRLI O DI INTERROMPERE LA PRODUZIONE DI DETERMINATI PRODOTTI.
TUTTI I DATI SONO FORNITI SENZA IMPEGNO FATTI SALVI I REFUSI, ERRORI DI STAMPA, DI COMPOSIZIONE E OMISSIONI. ACCOSSATO RACING SI RISERVA IL DIRITTO DI APPORTARE,IN QUALSIASI MOMENTO, LE MODIFICHE DEL CASO.

AVVERTENZA

NON IMITARE! I MOTOCICLISTI QUI RITRATTI SONO PILOTI PROFESSIONISTI. LE FOTOGRAFIE SONO STATE REALIZZATE IN CIRCUITI CHIUSI O SU STRADE CHIUSE AL TRAFFICO. ACCOSSATO RACING INVITA TUTTI I MOTOCICLISTI AD INDOSSARE L'ABBIGLIAMENTO PRESCRITTO E A GUIDARE CON COSCIENZA NEL RISPETTO DELLE RELATIVE DISPOSIZIONI APPLICABILI DEL CODICE DELLA STRADA.
ALCUNI ARTICOLI DELLA GAMMA ACCOSSATO RAGING POSSONO NON ESSERE OMOLOGATI PER L'USO SU STRADA (A SECONDA DEL PAESE). PER MAGGIORI INFORMAZIONI RIVOLGERSI AGLI UFFICI COMMERCIALI ACCOSSATO RACING.

PRODUCTS RESERVED FOR CLOSED TRACKS

THE PRODUCTS ON THIS CATALOGUE ARE INTENDED FOR EXCLUSIVE RACING USE AND MUST BE USED ON CLOSED TRACKS. THEIR USAGE ON PUBLIC HIGHWAYS AND ROADS IS STRICTLY FORBIDDEN. THE ASSEMBLING OF THE SPARE PARTS MUST BE DONE BY ACCOSSATO AUTHORIZED DISTRIBUTORS AND SHOPS.

EXCLUSION OF LIABILITY

ACCOSSATO RACING OR ITS DISTRIBUTORS WILL BE GLAD TO HELP THE CUSTOMERS CHOSING THE EXACT AND/OR NECCESSARY SPARE PARTS FOR THEIR OWN MOTORCYCLE.
ACCOSSATO RACING RESERVES THE RIGHT TO MODIFY/CANCEL WITHOUT REPLACEMENT TECHNICAL SPECIFICATIONS, COLORS, MATERIALS OR TO STOP THE PRODUCTION OF SOME KIND OF PRODUCTS.
THE COMPANY WILL PROVIDE ALL THE DETAILS WITH NO OBBLIGATION OMISSIONS,ERRORS,MISPRINTS EXCEPTED.
IN ANY MOMENT ACCOSSATO RACING RESERVES THE RIGHT TO MODIFY ANY SECTION OF THIS CATALOGUE.

WARNING

DON'T IMITATE! THE RACERS IN THE PICTURES ARE PROFESSIONAL RACERS. THE PICTURES WERE BE SHOOTED IN CLOSED TRACKS.
ACCOSSATO RACING INVITES ALL THE RACERS TO WEAR THE CORRECT CLOTHING AND TO DRIVE COSCIENTIOUSLY IN RESPECT OF THE TRAFFIC LAWS.
SOME PRODUCTS OF ACCOSSATO'S SELECTION CAN'T BE HOMOLOGATE TO BE USED ON THE PUBLIC HIGHWAYS(BASED ON THE RULES OF THE DIFFERENT COUNTRIES).
FOR FURTHER INFORMATION PLEASE CONTACT ACCOSSATO RACING SALES DEPARTMENT.

AG DISTRIBUTION
ACCOSSATO GROUP

DC-CHAINS.COM

DC AFAM NV
MOTORCYCLE PARTS

LP

MANN FILTER

ACCOSSATO HA SELEZIONATO PRODOTTI DI FAMOSI BRAND INTERNAZIONALI CHE VERRANNO DISTRIBUITI CON IL MARCHIO AG DISTRIBUZIONE.
IL NUOVO RANGE DI PRODOTTI COMPRENDERÀ I KIT CATENE-CORONE-PIGNONI DC-CHAINS, LE BATTERIE LANDPORT E I FILTRI MANN FILTER.

ACCOSSATO GROUP HAS SELECTED FAMOUS INTERNATIONAL BRANDS WICH WILL BE DISTRIBUTED BY AG DISTRIBUTION BRAND. THE NEW RANGE OF PRODUCTS INCLUSED DC-CHAINS TRANSMISSION KIT, LANDPORT BATTERIES AND MANN FILTER FILTERS.



INDICE GENERALE
table of contents

RACING:	**5 - 78**
STREET RACING:	**79 - 196**
TUBI FRENO brake lines:	**197 - 242**
PASTIGLIE brake pads:	**243 - 502**
DISCHI FRENO brake rotors:	**503 - 730**
LEVE levers:	**731 - 811**


X-lite
MUPO
race suspension
PIRELLI
X-lite
SPIDER
RACE SEATS
València
Terra i Mar
GASOLINE
FOR HUMANS
ENERGY DRINK
bami
RACING TEAM

INDICE LINEA RACING
racing line index

POMPE RADIALI / radial master cylinders:	**6 - 11**
ACCESSORI / accessories:	**12 - 13**
SGANCIO RAPIDO TUBO FRENO brake hose quick disconnector:	**14**
FLUIDO FRENI / brake fluid:	**15 - 17**
KIT:	**18 - 19**
PINZE FRENO / brake calipers:	**22 - 31**
PARALEVA "DEFLECTOR" / handguard:	**32 - 34**
COMANDI GAS / throttle control:	**35 - 39**
PULSANTIERE / button panels:	**40 - 41**
KIT DI TRASFORMAZIONE FRIZIONE FILO-IDRAULICA hydraulic clutch trasformation kit:	**42 - 43**
SENSORI DEL CAMBIO / quick shifter:	**44 - 45**
COMANDI FRIZIONE / clutch control:	**46 - 51**
LEVE DI RICAMBIO / spare part levers:	**52 - 68**
SEMIMANUBRI / clip on:	**69 - 75**
PROTEZIONE CORONA / sprocket defender:	**76**
MANOPOLE / grips:	**77**

Racing

ACCOSSATO

POMPE RICAVATE DAL PIENO / cnc-worked master cylinders



POMPE FRENO Ø 19
Brake Master Cylinders Ø 19

CODICE Reference	**DESCRIZIONE** / Description
CY001	**POMPA FRENO RADIALE 19x18 CNC** cnc-worked brake master cylinder 19x18
CY002	**POMPA FRENO RADIALE 19x19 CNC** cnc-worked brake master cylinder 19x19
CY003	**POMPA FRENO RADIALE 19x20 CNC** cnc-worked brake master cylinder 19x20
CY004	**POMPA FRENO PRS 19x17-18-19 CNC** cnc-worked PRS brake master cylinder 19x17-18-19

POMPE FRIZIONE Ø 16
Clutch Master Cylinders Ø 16

CODICE Reference	**DESCRIZIONE** / Description
CY005	**POMPA FRIZIONE PRS 16x15-16-17 CNC** cnc-worked PRS clutch master cylinder 16x15-16-17

Nota: per impianti bidisco si consigliano pompe diametro 19; per impianti monodisco si consigliano pompe diametro 16
Note: diameter 19 is suggested for double brake rotor-systems; diameter 16 is suggested for single brake rotor-systems

ACCOSSATO

Racing

POMPE RICAVATE DAL PIENO / cnc-worked master cylinders

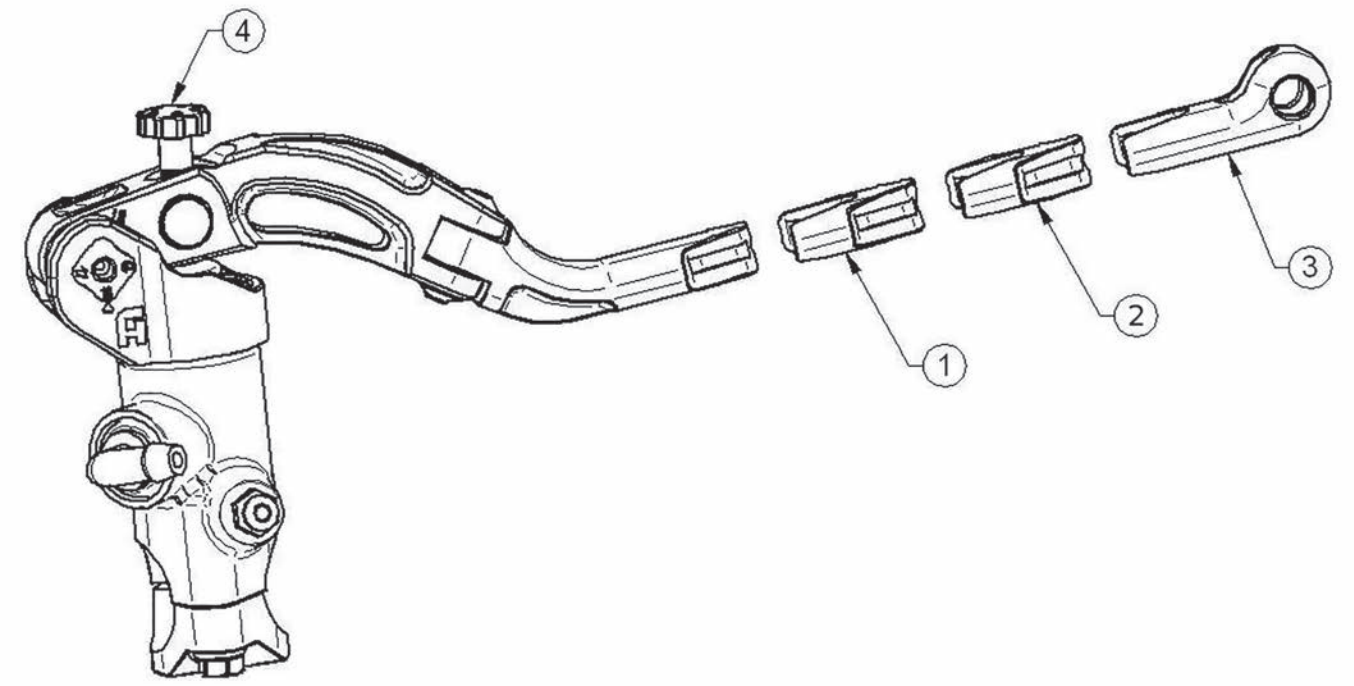

*** Inserto (2) e pomello di regolazione (4) disponibili solo in nero**
* Second insert (2) and adjusting knob (4) available in black color only

LEVA CORTA / Short lever	**LEVA MEDIA** / Medium lever	**LEVA LUNGA** / Long lever
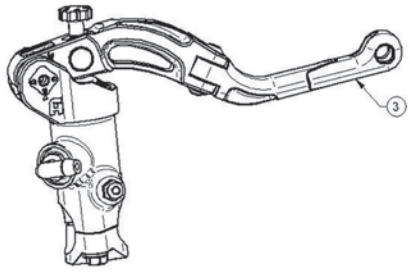	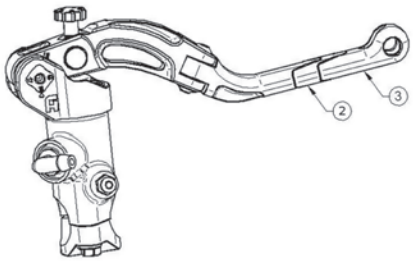	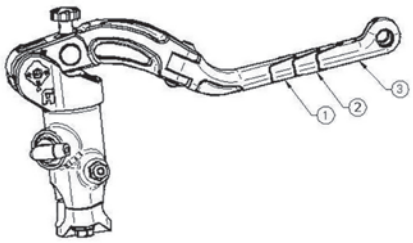
IMPUGNATURA + CODINO handle + final insert	**IMPUGNATURA + INSERTO (2) + CODINO** handle + second insert + final insert	**IMPUGNATURA + INSERTO (1) + INSERTO (2) + CODINO** handle + first insert + second insert + final insert

INSERTI DI RICAMBIO
spare-part insets

CODICE Reference	**DESCRIZIONE** Description	**COLORI INSERTO E CODINO** Insets colours
IN001	**INSERTO + VITI** insert + screws	**N** **NERO** / black **O** **ARANCIONE** / orange **Y** **ORO** / gold **B** **BLU** / blue **R** **ROSSO** / red **S** **ARGENTO** / silver **G** **VERDE** / green
IN003	**CODINO** final insert	

Racing

ACCOSSATO

POMPE FRENO RADIALI / radial brake master cylinders



POMPE FRENO Ø 16
Brake Master Cylinders Ø 16

CODICE Reference	**DESCRIZIONE** / Description
CY034	**POMPA FRENO 16x16 FORGIATA, CON LEVA FISSA** forged brake master cylinder 16x16, with fix lever
CY033	**POMPA FRENO 16x16 FORGIATA, CON LEVA SNODATA** forged brake master cylinder 16x16, with folding lever
CY028	**POMPA FRENO 16x18 FORGIATA, CON LEVA FISSA** forged brake master cylinder 16x18, with fix lever
CY027	**POMPA FRENO 16x18 FORGIATA, CON LEVA SNODATA** forged brake master cylinder 16x18, with folding lever
CY030	**POMPA FRENO PRS 16x17-18-19 FORGIATA, CON LEVA SNODATA** forged PRS brake master cylinder 16x17-18-19, with folding lever

OPZIONI LEVA / Lever options	
LUNGA long	17 cm
CORTA short	15 cm
CON RST with RST	

POMPE FRENO Ø 19
Brake Master Cylinders Ø 19

CODICE Reference	**DESCRIZIONE** / Description
CY023	**POMPA FRENO 19x18 FORGIATA, CON LEVA FISSA** forged brake master cylinder 19x18, with fix lever
CY021	**POMPA FRENO 19x18 FORGIATA, CON LEVA SNODATA** forged brake master cylinder 19x18, with folding lever
CY039	**POMPA FRENO 19x19 FORGIATA, CON LEVA FISSA** forged brake master cylinder 19x19, with fix lever
CY040	**POMPA FRENO 19x19 FORGIATA, CON LEVA SNODATA** forged brake master cylinder 19x19, with folding lever
CY029	**POMPA FRENO 19x20 FORGIATA, CON LEVA FISSA** forged brake master cylinder 19x20, with fix lever
CY035	**POMPA FRENO 19x20 FORGIATA, CON LEVA SNODATA** forged brake master cylinder 19x20, with folding lever
CY041	**POMPA FRENO 19x21 FORGIATA, CON LEVA SNODATA** forged brake master cylinder 19x21, with folding lever
CY022	**POMPA FRENO PRS 19x17-18-19 FORGIATA, CON LEVA SNODATA** forged PRS brake master cylinder 19x17-18-19, with folding lever

OPZIONI LEVA / Lever options	
LUNGA long	17 cm
CORTA short	15 cm
CON RST with RST	

Nota: per impianti bidisco si consigliano pompe diametro 19; per impianti monodisco si consigliano pompe diametro 16
Note: diameter 19 is suggested for double brake rotor-systems; diameter 16 is suggested for single brake rotor-systems

POMPE FRIZIONI RADIALI / radial clutch master cylinders

LEVA K / k-type lever



LEVA RST / rst lever



POMPE FRIZIONE Ø 16
Clutch Master Cylinders Ø 16

CODICE Reference	**DESCRIZIONE** / Description
CY026	**POMPA FRIZIONE 16x16 FORGIATA, CON LEVA FISSA** forged clutch master cylinder 16x16, with fix lever
CY025	**POMPA FRIZIONE 16x16 FORGIATA, CON LEVA SNODATA** forged clutch master cylinder 16x16, with folding lever
CY032	**POMPA FRIZIONE 16x18 FORGIATA, CON LEVA FISSA** forged clutch master cylinder 16x18, with fix lever
CY031	**POMPA FRIZIONE 16x18 FORGIATA, CON LEVA SNODATA** forged clutch master cylinder 16x18, with folding lever
CY024	**POMPA FRIZIONE PRS 16x15-16-17 FORGIATA, CON LEVA SNODATA** forged PRS clutch master cylinder 16x15-16-17, with folding lever

OPZIONI LEVA / Lever options	
LUNGA long	17 cm
CORTA short	15 cm
CON RST with RST	
FRIZIONE clutch	Ø 16
FRIZIONE clutch	Ø 19

POMPE FRIZIONE Ø 19
Clutch Master Cylinders Ø 19

CODICE Reference	**DESCRIZIONE** / Description
CY038	**POMPA FRIZIONE 19x20 FORGIATA, CON LEVA SNODATA** forged clutch master cylinder 19x20, with folding lever

OPZIONI LEVA / Lever options	
LUNGA long	17 cm
CORTA short	15 cm
CON RST with RST	

Nota: per impianti bidisco si consigliano pompe diametro 19; per impianti monodisco si consigliano pompe diametro 16
Note: diameter 19 is suggested for double brake rotor-systems; diameter 16 is suggested for single brake rotor-systems

Racing

ACCOSSATO

POMPA A POLLICE / thumb master cylinder



CODICE Reference	DESCRIZIONE Description	CARATTERISTICHE TECNICHE Technical details	
BP001	POMPA FRENO A POLLICE CON LEVA CORTA Thumb brake master cylinder provided with short lever	Ø POMPANTE / piston	10,5 mm
		PESO / weight	150 gr
		STAFFA DI SUPPORTO bracket	NON INCLUSA not included
BP002		Ø POMPANTE / piston	10,5 mm
		STAFFA DI SUPPORTO bracket	INCLUSA included

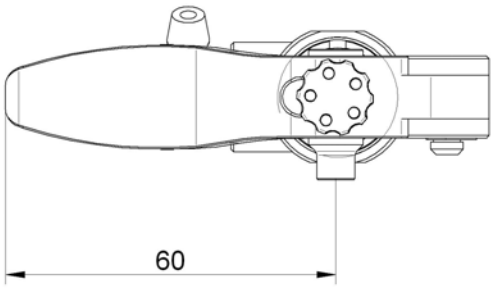

CODICE Reference	DESCRIZIONE Description	CARATTERISTICHE TECNICHE Technical details	
BP003	POMPA FRENO A POLLICE CON LEVA LUNGA Thumb brake master cylinder provided with long lever	Ø POMPANTE / piston	10,5 mm
		PESO / weight	150 gr
		STAFFA DI SUPPORTO bracket	NON INCLUSA not included
BP004		Ø POMPANTE / piston	10,5 mm
		STAFFA DI SUPPORTO bracket	INCLUSA included

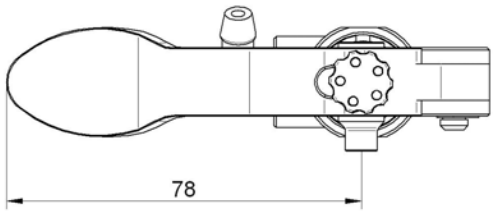

CODICE Reference	DESCRIZIONE Description	CARATTERISTICHE TECNICHE Technical details	
BP005	POMPA FRENO A POLLICE CON LEVA CURVA Thumb brake master cylinder provided with bent lever	Ø POMPANTE / piston	10,5 mm
		PESO / weight	150 gr
		STAFFA DI SUPPORTO bracket	NON INCLUSA not included
BP006		Ø POMPANTE / piston	10,5 mm
		STAFFA DI SUPPORTO bracket	INCLUSA included

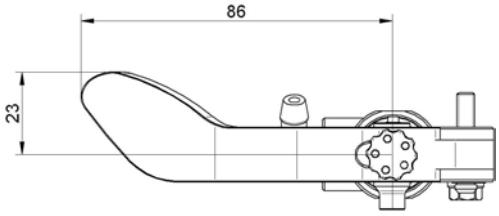

ACCESSORI Accessories

CODICE / Reference	DESCRIZIONE / Description
BS001	LEVA CORTA POMPA A POLLICE short lever for thumb master cylinder

CODICE / Reference	DESCRIZIONE / Description
BS003	LEVA CURVA POMPA A POLLICE bent lever for thumb master cylinder

CODICE / Reference	DESCRIZIONE / Description
BS002	LEVA LUNGA POMPA A POLLICE long lever for thumb master cylinder

CODICE / Reference	DESCRIZIONE / Description
BS004	STAFFA DI SUPPORTO bracket

SPIEGAZIONE	Explanation
La pompa freno a pollice Accossato è realizzata interamente in alluminio ricavato dal pieno, con trattamento superficiale di ossidazione dura, di colore nero. Consente di attivare il freno posteriore esercitando pressione con il solo pollice della mano sinistra. La sua facilità di utilizzo agevola le derapate, classiche in ingresso curva.	Accossato thumb brake master cylinder is utterly made in CNC-worked aluminium, finished with hard anodization superficial treatment, coloured in black. It allows the driver to activate rear brake master cylinder by simply pressing onto the device with his/her left thumb. Its easy use facilitates sideslips when entering bends.

POMPA FRENO POSTERIORE / rear brake master cylinder



CODICE Reference	DESCRIZIONE Description	CARATTERISTICHE TECNICHE Technical details	
MP001	POMPA FRENO POSTERIORE Rear brake master cylinder	Ø POMPANTE / piston	10,5 mm
		INTERASSE FORI DI FOSSAGGIO / bolt pattern	40-50 mm
		PESO / weight	75 gr

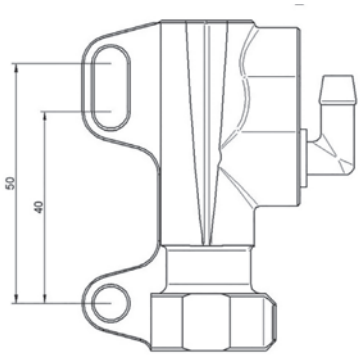

SPIEGAZIONE	Explanation
Interamente in alluminio ricavato dal pieno, con trattamento superficiale di ossidazione dura, colore nero.	Fully made in CNC-worked aluminium, hard anodization superficial treatment, coloured in black.

Racing

ACCOSSATO

ACCESSORI / accessories



MH001 - MH004 *

	CODICE Reference	**DESCRIZIONE** / Description
	**RC001**	**CAVALLOTTO PER POMPA FRENO ACCOSSATO LINEA RACING, ANODIZZATO NATURALE** anodized riser for Accossato Racing-line brake master cylinders
	**RC002**	**CAVALLOTTO PER POMPA FRIZIONE ACOSSATO LINEA RACING, ANODIZZATO NATURALE** anodized riser for Accossato Racing-line clutch master cylinders
	**RC005**	**TAPPO IN GOMMA PER VALVOLA DI SPURGO** bleed valve cover
	**RC006**	**VALVOLA DI SPURGO M8x1** bleed valve M8x1
	**RC007**	**RACCORDO DI COMPENSAZIONE OLIO a L** L-shaped compensation fitting
	**RC009**	**POMELLO DI REGOLAZIONE + SPINA Ø 1,5** adjusting knob + pin Ø 1,5
	**RC010**	**GUARNIZIONE TENUTA DI COMPENSAZIONE OLIO** oil compensation seal
	**RC011**	**(N° 2) VITI CAVALLOTTO, M6x20** (2 pcs) riser screws, M6x20

CODICE Reference	**DESCRIZIONE** / Description
MH001	**SUPPORTO SPECCHIETTO PER POMPE FRENO ACCOSSATO, RICAVATO CNC, FILETTO M8** mirror holder for Accossato brake master cylinders, cnc-worked, screw pitch M8
MH002	**SUPPORTO SPECCHIETTO PER POMPE FRENO ACCOSSATO, RICAVATO CNC, FILETTO M10x1,25** mirror holder for Accossato brake master cylinders, cnc-worked, screw pitch M10x1,25
MH003	**SUPPORTO SPECCHIETTO PER POMPE FRIZIONE ACCOSSATO, RICAVATO CNC, FILETTO M8** mirror holder for Accossato clutch master cylinders, cnc-worked, screw pitch M8
MH004	**SUPPORTO SPECCHIETTO PER POMPE FRIZIONE ACCOSSATO, RICAVATO CNC, FILETTO M10x1,25** mirror holder for Accossato clutch master cylinders, cnc-worked, screw pitch M10x1,25

*** FOTO A SOLO SCOPO ILLUSTRATIVO** / picture for illustrative purposes only



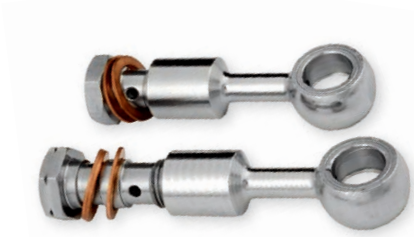

CODICE Reference	DESCRIZIONE / Description
ID001	**IDROSTOP 1 FORO, M10x1 (PER POMPA ACCOSSATO)** 1 hole-idrostop, m10x1 (for Accossato master cylinder)
ID002	**IDROSTOP 2 FORI, M10x1 (PER POMPA ACCOSSATO)** 2 hole-idrostop, m10x1 (for Accossato master cylinder)
ID003	**IDROSTOP 1 FORO, M10x1,25** 1 hole-idrostop, m10x1,25
ID004	**IDROSTOP 2 FORI, M10X1,25** 2 hole-idrostop, m10x1,25

CODICE Reference	DESCRIZIONE / Description
AD001	**VITE 1 FORO + ADATTATORE + 2 RONDELLE IN RAME** 1-hole screw + adapter + 2 copper washers
AD002	**VITE 2 FORI + ADATTATORE + 3 RONDELLE IN RAME** 2-hole screw + adapter + 3 copper washers





CODICE Reference	DESCRIZIONE Description
VG001	**VASCHETTA 30 ml** fluid reservoir 30 ml

CODICE Reference	DESCRIZIONE Description
VP001	**VASCHETTA 15 ml** fluid reservoir 15 ml



CODICE Reference	DESCRIZIONE Description
FA001	**FASCETTA** hose clamp



CODICE Reference	DESCRIZIONE Description
ROND10	**RONDELLA IN RAME** copper washer



CODICE Reference	DESCRIZIONE Description	DIAM.
MS2362	**BULLONE DOPPIO** / double bolt	**M10x1**
MS2363	**BULLONE DOPPIO** / double bolt	**M10x1,25**
MS2364	**BULLONE DOPPIO** / double bolt	**3/8"**



CODICE Reference	DESCRIZIONE Description	DIAM.
MS2365	**BULLONE SINGOLO** / single bolt	**M10x1**
MS2366	**BULLONE SINGOLO** / single bolt	**M10x1,25**
MS2367	**BULLONE SINGOLO** / single bolt	**3/8"**



CODICE Reference	DESCRIZIONE Description
TU001	**TUBO IN GOMMA** rubber tube



CODICE Reference	DESCRIZIONE Description	CONTENUTO Content
KITVG	**KIT PER IL MONTAGGIO VASCHETTA ACCOSSATO** Accossato fluid reservoir assembly kit	**VASCHETTA 30 ml - TUBO - FASCETTA - SUPPORTO IN ALLUMINIO** / fluid reservoir 30 ml - tube - hose clamp - alluminium support
KITVP	**KIT PER IL MONTAGGIO VASCHETTA ACCOSSATO** Accossato fluid reservoir assembly kit	**VASCHETTA 15 ml - TUBO - FASCETTA - SUPPORTO IN ALLUMINIO** / fluid reservoir 30 ml - tube - hose clamp - alluminium support

Racing

ACCOSSATO

SGANCIO RAPIDO TUBO FRENO / brake-hose quick disconnector



CODICE Reference	**DESCRIZIONE** / Description	**COLORE** / Colour	**UNF**
BL001	**SGANCIO RAPIDO TUBO FRENO IN TITANIO** brake-hose quick disconnector, titanium-made	**N** **NERO** / black	**3/8''- 24**
BL002	**SGANCIO RAPIDO TUBO FRENO IN ALLUMINIO** brake-hose quick disconnector, aluminium-made	**N** **NERO** / black	**3/8''- 24**
BL003	**SGANCIO RAPIDO TUBO FRENO IN TITANIO** brake-hose quick disconnector, titanium-made	**R** **ROSSO** / red	**3/8''- 24**
BL006	**SGANCIO RAPIDO TUBO FRENO IN ALLUMINIO** brake-hose quick disconnector, aluminium-made	**R** **ROSSO** / red	**3/8''- 24**
BL005	**SGANCIO RAPIDO TUBO FRENO IN TITANIO** brake-hose quick disconnector, titanium-made	**Y** **ORO** / gold	**3/8''- 24**
BL004	**SGANCIO RAPIDO TUBO FRENO IN ALLUMINIO** brake-hose quick disconnector, aluminium-made	**Y** **ORO** / gold	**3/8''- 24**

SPIEGAZIONE	Explanation
Lo sgancio rapido dei tubi freno garantisce leggerezza e resistenza, praticità e sicurezza. Consente lo smontaggio dell'impianto frenante in diversi segmenti, senza causare perdite di liquido freni e/o ingresso d'aria.	Brake-hose quick disconnector ensures lightness and durability, practicality and safety. It allows to dismount braking system in several segments, preventing it from leakages and/or entrance of air.

SUPER BRAKE FLUID DOT 4

DESCRIZIONE / Description

Il fluido freni ACCOSSATO DOT4 è un olio a base sintetica dalle elevatissime prestazioni, da utilizzare nei moderni impianti idraulici. È particolarmente consigliato nell'impiego dei sistemi ABS.

L'elevata qualità del prodotto è dovuta a:

- **Elevato punto di ebollizione**
- **Bassa viscosità a temperature rigide**
- **Ridotta aggressività ai metalli e alle guarnizioni del circuito frenante**

Gli speciali additivi contenuti nel fluido ottimizzano e prolungano la corretta funzionalità di manicotti, tubazioni e anelli di tenuta dell'impianto frenante. IDot4 è compatibile con tutti i fluido freni aderenti alle norme FMVSS 116.

PER MOTIVI DI SICUREZZA IL LIQUIDO FRENI DEVE ESSERE SOSTITUITO PERIODICAMENTE SECONDO LE PRESCRIZIONI DELLA CASA PRODUTTRICE DEL VEICOLO.

The ACCOSSATO Super Brake Fluid DOT4 is a very high performing synthetic motor oil, suitable for any modern braking system. particularly suggested for motorcycles equipped with ABS system.

Its high quality is based upon:

- High boiling point
- Low viscosity at low temperatures
- No damages to metals and gaskets

Its innovative additives extend sleeves, hoses and gaskets lifetime preserving unaltered its braking capacity.
The Accossato Super Brake Fluid dot 4 can be mixed with other fluids according to the fmvss 116.

Warning: this brake fluid should be replaced soon after each race/competition, according to the guidelines suggested by each motorcycle manufactory company.



CARATTERISTICHE TECNICHE / Technical details		
PARAMETRI / Parameters	**VALORE** / Value	**SPECIFICA** / Specification
ASPETTO / Appearance	**LIQUIDO LIMPIDO** / Clear fluid	**LIQUIDO LIMPIDO** / Clear fluid
PUNTO DI EBOLLIZIONE / equilibrium reflex boiling point **°C**	**265**	**260 MIN**
PUNTO DI EBOLLIZIONE A UMIDO / wet equilibrium reflex boiling point **°C**	**165**	**155 MIN**
VISCOSITÀ A / viscosity at **-40°C, CPS**	**1400**	**1800 MAX**
VISCOSITÀ A / viscosity at **100°C CPS**	**2.2**	**1.5 MIN**
PH	**7.8**	**7.0-11.5**
CORROSIONE / corrosion **(MG/CM²)**:		
Fe STAGNATO / iron+tin	**-0.02**	**0.2 MAX**
ACCIAIO / steel	**-0.02**	**0.2 MAX**
ALLUMINIO / aluminium	**-0.02**	**0.1 MAX**
GHISA / cast iron	**-0.02**	**0.2 MAX**
OTTONE / brass	**0.06**	**0.4 MAX**
RAME / copper	**-0.10**	**0.4 MAX**
PH (DOPO CORROSIONE / after corrosion)	**7.5**	**7.0-11.5**
RIGONFIAMENTO GOMMA SBR A /SBR (styrene butadiene rubber) swelling at **120 °C**		
DIMINUZIONE DUREZZA / IRHD	**-7**	**-15 MAX**
AUMENTO DIAMETRO / diameter increase (**MM**)	**0.80**	**0.15-1.4**
PERDITA DI PESO ALL'EVAPORAZIONE / loss weight (evaporation)	**57.0**	**80 MAX**
LIVELLO DI PRESTAZIONI / Performance		
SAE J 1703 SAE J 1704 - ISO 4925 CLASS 4 - FMVSS 571-116-DOT4 - CUNA NC 956-01 - FIAT 9.55597		

Racing

OLIO FRENI / brake fluid

ACCOSSATO

SOLO USO SU CIRCUITO / use on circuit only

ACCOSSATO RACING BRAKE FLUID DOT 5.1

DESCRIZIONE / Description

Il fluido freni ACCOSSATO DOT5.1 è un liquido freni ad elevato punto di ebollizione, particolarmente indicato per tutte le moto dotate di sistema ABS, nonché per le applicazioni da competizione, dove la sollecitazione dell'impianto frenante raggiunge la sua massima espressione di resa.
L'utilizzo di questo prodotto, scongiura il rischio del cosiddetto "VAPOUR LOCK": in caso di uso intensivo prolungato, l'umidità prodotta dal vapore ristagna all'interno del sistema di frenaggio e, una volta assorbita dal fluido freni, ne altera le proprietà.Il fluido freni Accossato Dot5.1 può essere mescolato ad altri fluidi aderenti alle norme FMVSS 116, quali il DOT3, DOT4, DOT5; NON è invece miscelabile a fluido freni a base di siliconi o esteri silicati.
Gli speciali additivi contenuti nel fluido ottimizzano e prolungano la corretta funzionalità di manicotti, tubazioni ed anelli di tenuta dell'impianto frenante.

PER RAGIONI DI SICUREZZA IL LIQUIDO FRENI DEVE ESSERE SOSTITUITO PERIODICAMENTE SECONDO LE PRESCRIZIONI DELLA CASA PRODUTTRICE DEL VEICOLO.

Avvertenza: Al fine di mantenere intatte le prestazioni e la funzionalità dell'impianto frenante, si consiglia di rimuovere il fluido freni ACCOSSATO DOT5.1 immediatamente dopo ogni gara/utilizzo.
Se non sostituito ad ogni utilizzo, il liquido freni ristagnante all'interno della pompa provoca l'irrimediabile danneggiamento delle guarnizioni della stessa.

The ACCOSSATO Super Brake Fluid DOT5.1 Is a very high boiling-point motor oil, this makes it particularly suitable for motorcycles equipped with ABS system and purely-racing applications, whose brake system is repeatedly strained.
This specificity avoids the so-called "vapour lock" effect for which moisture caused by steam alters the brake fluid features.
The ACCOSSATO DOT5.1 Brake fluid can be blended with other fluids compliant with FMVSS 116 norms, such as DOT3, DOT4 and DOT5. Oppositely, it can not be used in combination with silicone or silicone esters-based brake fluids.
Innovative additives increased the lifetime of the sleeves, hoses and joints of the entirebrke system.

Warning: this brake fluid should be replaced soon after each race/competition, according to the guidelines suggested by each motorcycle manufactory company.



CARATTERISTICHE TECNICHE / Technical details	
PARAMETRI / Parameters	**DATI TECNICI** / Technical features
PUNTO DI EBOLLIZIONE A SECCO / boiling point **°C** (dry)	**265 MIN**
PUNTO DI EBOLLIZIONE A UMIDO / boiling point **°C** (wet)	**180 MIN**
VISCOSITÀ A / viscosity at **-40°C, MM 2/S**	**← 900**
DENSITÀ A / density at **20°C KG/L**	**1.030-1-085**
CONTENUTO DI ACQUA / water contents **(% VOLUME)**	**0.15 MAX**
PH	**7-11.5**

LIVELLO DI PRESTAZIONI / Performance

DOT 5.1
US FMVSS 11

ACCOSSATO RACING BRAKE FLUID BFR 310

DESCRIZIONE / Description

Il fluido freni ACCOSSATO BFR310 è un liquido freni ad elevatissimo punto di ebollizione. È consigliato nell'impiego dei sistemi di frenatura adottati nel mondo delle competizioni, ma può essere utilizzato anche su veicoli da strada. L'utilizzo di questo prodotto, scongiura il rischio del cosiddetto "VAPOUR LOCK": in caso di uso intensivo prolungato, l'umidità prodotta dal vapore ristagna all'interno del sistema di frenaggio e, una volta assorbita dal fluido freni, ne altera le proprietà.
L'Accosato Racing Brake Fluid BFR 310 può essere mescolato con altri fluidi rispondenti alle norme FMVSS 116 DOT3, DOT4, DOT5. In questo caso però le prestazioni risulteranno inferiori.
Non è miscelabile con fluidi per freni a base di siliconi o di esteri silicati.
Gli speciali additivi contenuti nel fluido ottimizzano e prolungano la corretta funzionalità di manicotti, tubazioni ed anelli di tenuta dell'impianto frenante.

PER RAGIONI DI SICUREZZA IL LIQUIDO FRENI DEVE ESSERE SOSTITUITO PERIODICAMENTE SECONDO LE PRESCRIZIONI DELLA CASA PRODUTTRICE DEL VEICOLO.

Avvertenza: Al fine di mantenere intatte le prestazioni e la funzionalità dell'impianto frenante, si consiglia di rimuovere il fluido freni ACCOSSATO BFR310 immediatamente dopo ogni gara/utilizzo.
Se non sostituito ad ogni utilizzo, il liquido freni ristagnante all'interno della pompa provoca l'irrimediabile danneggiamento delle guarnizioni della stessa.

The ACCOSSATO Racing Brake Fluid BFR310 is an extremely high boiling-point motor oil.
It is particularly suitable for purely-racing applications and for on-road motorcycles as well.
This specificity avoids the so-called "vapour lock" effect for which moisture caused by steam alters the brake fluid features.
The ACCOSSATO BFR310 brake fluid can be blended with other fluids compliant with FMVSS 116 norms, such as DOT3, DOT4 and DOT5. Whether the case, BFR310 usual performing capacity might be altered.
Oppositely, it can not be used in combination with silicone or silicone esters-based brake fluids.
Its innovative additives extend sleeves, hoses and gaskets lifetime preserving unaltered its braking capacity.

Warning: this brake fluid should be replaced soon after each race/competition, according to the guidelines suggested by each motorcycle manufactory compa.



CARATTERISTICHE TECNICHE / Technical details	
PARAMETRI / Parameters	**DATI TECNICI** / Technical features
PUNTO DI EBOLLIZIONE A SECCO / boiling point **°C** (dry)	**300 MIN**
PUNTO DI EBOLLIZIONE A UMIDO / boiling point **°C** (wet)	**200 MIN**
VISCOSITÀ A / viscosity at **-40°C, MM 2/S**	**← 1800**
VISCOSITÀ A / viscosity at **40°C, MM 2/S**	**9.3**
DENSITÀ A / density at **20°C KG/L**	**1.070-1.090**
INFIAMMABILITÀ / flammability **°C**	**140 MIN**

LIVELLO DI PRESTAZIONI / Performance
DOT 3 - DOT 4 - FMVSS NO. 116 - SAE J1703

Racing

ACCOSSATO

KIT RACING

CODICE Reference	DESCRIZIONE / Description
KITA 1	**KIT POMPA FRENO RADIALE Ø 19 CON LEVA SNODATA (TUTTE POMPE 19X TRANNE PRS) + COMANDO ELETTRICO REGISTRO LEVA** master cylinder kit Ø 19 with folding lever+electric remote adjuster



CODICE Reference	DESCRIZIONE / Description
KITA 2	**POMPA RADIALE ACCOSSATO Ø 19 CON LEVA SNODATA (TUTTE POMPE 19X TRANNE PRS) + COMANDO FRIZIONE ACCOSSATO CF002** Accossato master cylinder Ø 19 with folding lever+clutch folding lever CF002



CODICE Reference	DESCRIZIONE / Description
KITA 3	**POMPA FRENO Ø 19 CON LEVA FISSA (TUTTE LE POMPE 19 TRANNE PRS) + SUPPORTO SPECCHIO (SPEC. M8 O M10X1,25) + IDROSTOP + KIT VASCHETTA 30ML** Ø 19 brake master cylinder with fix lever (all 19 except for PRS) + mirror holder (M8 or Mx1,25) + idrostop +30 ml fluid reservoir-kit



CODICE Reference	DESCRIZIONE / Description
KITA 4	**POMPA FRENO Ø 19 CON LEVA SNODATA (TUTTE LE POMPE 19 TRANNE PRS) + SUPPORTO SPECCHIO (SPEC. M8 O M10X1,25) + IDROSTOP + KIT VASCHETTA 30ML** Ø 19 brake master cylinder with folding lever (all Ø 19 except for PRS) + mirror holder (M8 or Mx1,25) + idrostop + 30 ml fluid reservoir-kit



CODICE Reference	DESCRIZIONE / Description
KITA 5	**POMPA FRENO Ø 19 CON LEVA FISSA (TUTTE LE POMPE 19 TRANNE PRS) + KIT TUBI FRENO COMPOSTO DA 2 TUBI ANTERIORI E 1 TUBO POSTERIORE** Ø 19 master cylinder with fix lever (all Ø 19 except for PRS) + brake hoses kit, including 2 front hoses & 1 rear




Arai
HELMET
CAROLE NASH
The care it deserves
www.leonhaslam.com
mce
BSB
SKIDMARX
Kawasaki
Kawasaki
32
speedfit

“Siete in cerca di un impianto frenante rivoluzionario che possa tener testa al vostro istinto da staccatori assassini? Ci pensa Accossato!”



“Looking for a revolutionary brake system to appease your outdistance hunger? Accossato is the answer!”

Racing

ACCOSSATO

PINZE FRENO / brake caliper

PINZE FRENO FORGIATE

LA PINZA FORGIATA ACCOSSATO NASCE COME EVOLUZIONE DELLA PINZA RICAVATA CNC UTILIZZANDO LE MIGLIORI TECNOLOGIE E LEGHE DISPONIBILI SUL MERCATO.
L'UTILIZZO DI QUESTA PINZA È RISERVATO PER GLI UTENTI CHE VOGLIONO FARE UN USO DELLA MOTO SIA A LIVELLO AMATORIALE CHE PROFESSIONALE.
LA FORMA E LE DIMENSIONI DI QUESTO PRODOTTO SONO STATE STUDIATE AL FINE DI GARANTIRE IL MIGLIOR PESO MA ALLO STESSO TEMPO LA MASSIMA RIGIDITÀ DEL CORPO ED ANCHE OTTIMA DISSIPAZIONE DEL CALORE GENERATO DALLA FRENATA.

Forged brake caliper

Accossato forged brake caliper was born as a result of the evolution of the CNC machines brake caliper, using the best technologies and alloys. This brake caliper can be use by both riders, those who want to use it in competition and those who just want to use it on normal roads.
The shape and the dimensions of this brake caliper are made to ensure the lowest weight, the maximum rigidity and the best heat dissipation.

PINZE FRENO RICAVATE DAL PIENO CNC

LA PINZA ACCOSSATO È STATA REALIZZATA UTILIZZANDO LE MIGLIORI TECNOLOGIE E I MATERIALI PIU' INNOVATIVI.
LA STRUTTURA DELLA PINZA VIENE REALIZZATA IN MONOBLOCCO ED È RICAVATA DAL PIENO CON MACCHINE CNC A 5 ASSI.
I TAPPI DI CHIUSURA CILINDRICI IN ALLUMINIO SONO STATI PROGETTATI PER OTTENERE UNA CHIUSURA A TENUTA MECCANICA.

CNC-worked brake caliper

The Accossato CNC brake caliper is made using the best technologies and innovative materials. Its structure is monoblock and is produced using 5 axis machines.
The aluminium caliper caps have been projected in order to guarantee a secure and staedy lock.

PZ001



PZ002



PZ003



PZ004



PZ005



PZ006



PZ007



PZ008



PINZA FRENO CNC
CNC-worked brake caliper



CODICE Reference	**DESCRIZIONE** Description	**CARATTERISTICHE TECNICHE** Technical details	
PZ001	**PINZA FRENO CNC MONOBLOCCO** Monoblock cnc-worked brake caliper	**INTERASSE** / distance	**108 mm**
		OFF-SET	**22,5 mm**
		PISTONCINI / small pistons	**TITANIO AUTOVENTILATI D34mm (n°4)** titanium-made, self-ventilated, D34mm (4pcs)
		GUARNIZIONE PARAPOLVERE / dust seal	**NO**
		COLORE / colour	**OSSIDO DURO** / hard oxidation
		PASTIGLIE / brake pads	**NON INCLUSE** / not included
		N° PASTIGLIE X PINZA N° of brake pads per caliper	**4 pz** / 4pcs
		CONTENUTO CONFEZIONE / pack contents	**PINZA SINGOLA (DX oppure SX)** single brake caliper (L or R)

ACCESSORI DI RICAMBIO (VENDUTI SINGOLARMENTE) spare parts (sold individually)	
CODICE Reference	**DESCRIZIONE** Description
AGPA134ZXC	**PASTIGLIE FRENO MESCOLA RACING (4 pz x blister)** brake pad with racing compound (4pcs x blister)
AGPA134EV2	**PASTIGLIE FRENO MESCOLA RACING (2 pz x blister)** brake pad with racing compound (2pcs x blister)
PT034	**PISTONE AUTOVENTILATO IN TITANIO, Ø34** self-ventilated piston, made in aluminium, Ø34
UP034	**GUARNIZIONE PISTONE Ø34** Ø34 piston seal
AGPET	**PERNO IN TITANIO** titanium pin
AGM01	**MOLLA ANTI-VIBRAZIONI** anti-rattle spring
AGFS	**FERMO DI SICUREZZA** safety catch
RC012	**VALVOLA DI SPURGO M8x1** bleeding valve M8x1

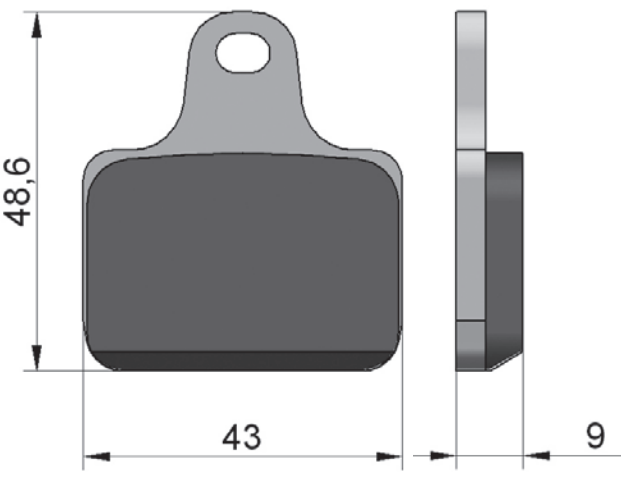

AGPA134 ZXC / EV2

PINZA FRENO FORGIATA
forged brake caliper



CODICE Reference	**DESCRIZIONE** Description	**CARATTERISTICHE TECNICHE** Technical details	
PZ002	**PINZA FRENO FORGIATA MONOBLOCCO** Monoblock forged brake caliper	**INTERASSE** / distance	**108 mm**
		OFF-SET	**22,5 mm**
		PISTONCINI / small pistons	**TITANIO AUTOVENTILATI D34mm (n°4)** titanium-made, self-ventilated, D34mm (4pcs)
		GUARNIZIONE PARAPOLVERE / dust seal	**NO**
		COLORE / colour	**OSSIDAZIONE NERA** / black oxidation
		PASTIGLIE / brake pads	**NON INCLUSE** / not included
		N° PASTIGLIE X PINZA N° of brake pads per caliper	**4 pz** / 4pcs
		CONTENUTO CONFEZIONE / pack contents	**PINZA SINGOLA (DX oppure SX)** single brake caliper (L or R)

ACCESSORI DI RICAMBIO (VENDUTI SINGOLARMENTE) spare parts (sold individually)	
CODICE Reference	**DESCRIZIONE** Description
AGPA134ZXC	**PASTIGLIE FRENO MESCOLA RACING (4 pz x blister)** brake pad with racing compound (4pcs x blister)
AGPA134EV2	**PASTIGLIE FRENO MESCOLA RACING (2 pz x blister)** brake pad with racing compound (2pcs x blister)
PT034	**PISTONE AUTOVENTILATO IN TITANIO, Ø34** self-ventilated piston, made in aluminium, Ø34
UP034	**GUARNIZIONE PISTONE Ø34** Ø34 piston seal
AGPET	**PERNO IN TITANIO** titanium pin
AGPEI	**PERNO INOX** stainless steel pin
AGM01	**MOLLA ANTI-VIBRAZIONI** anti-rattle spring
AGFS	**FERMO DI SICUREZZA** safety catch
RC012	**VALVOLA DI SPURGO M8x1** bleeding valve M8x1

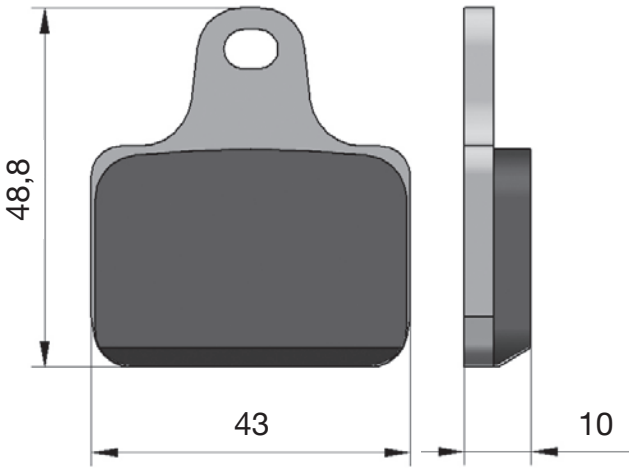

AGPA134 ZXC / EV2

PINZA FRENO FORGIATA
forged brake caliper



CODICE Reference	**DESCRIZIONE** Description	**CARATTERISTICHE TECNICHE** Technical details	
PZ003	**PINZA FRENO FORGIATA MONOBLOCCO** Monoblock forged brake caliper	**INTERASSE** / distance	**108 mm**
		OFF-SET	**22,5 mm**
		PISTONCINI / small pistons	**ALLUMINIO ERGAL D34mm (n°4)** ergal aluminium D34mm (4pcs)
		GUARNIZIONE PARAPOLVERE / dust seal	**SI** / yes
		COLORE / colour	**OSSIDAZIONE NATURALE** / natural oxidation
		PASTIGLIE / brake pads	**NON INCLUSE** / not included
		N° PASTIGLIE X PINZA N° of brake pads per caliper	**4 pz** / 4pcs
		CONTENUTO CONFEZIONE / pack contents	**PINZA SINGOLA (DX oppure SX)** single brake caliper (L or R)

ACCESSORI DI RICAMBIO (VENDUTI SINGOLARMENTE) spare parts (sold individually)	
CODICE Reference	**DESCRIZIONE** Description
AGPA134ZXC	**PASTIGLIE FRENO MESCOLA RACING (4 pz x blister)** brake pad with racing compound (4pcs x blister)
AGPA134EV2	**PASTIGLIE FRENO MESCOLA RACING (2 pz x blister)** brake pad with racing compound (2pcs x blister)
PA034	**PISTONE IN ALLUMINIO, Ø34** Ø34 aluminium pin
UP034	**GUARNIZIONE PISTONE Ø34** Ø34 piston seal
GP034	**GUARNIZIONE PARAPOLVERE Ø34** Ø34 dust seal
AGPET	**PERNO IN TITANIO** titanium pin
AGPEI	**PERNO INOX** stainless steel pin
AGM01	**MOLLA ANTI-VIBRAZIONI** anti-rattle spring
AGFS	**FERMO DI SICUREZZA** safety catch
RC012	**VALVOLA DI SPURGO M8x1** bleeding valve M8x1

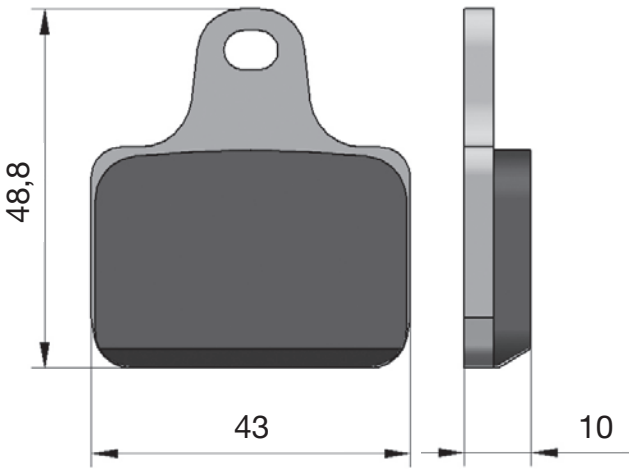

AGPA134 ZXC / EV2

Racing

ACCOSSATO

PINZE FRENO / brake caliper

PINZA FRENO FORGIATA
forged brake caliper



NEW

COLORI PINZE Calipers colours	**FINITURA** Finishing
A **ANTRACITE** / charcoal **N** **NERO** / black	**ANODIZZAZIONE** anodizing
Y **GIALLO FLUO** / fluor. yellow **B** **BLU** / blue **R** **ROSSO** / red **S** **SILVER**	**VERNICIATURA** coating

CODICE Reference	**DESCRIZIONE** Description	**CARATTERISTICHE TECNICHE** Technical details	
PZ004	**PINZA FRENO FORGIATA MONOBLOCCO** Monoblock forged brake caliper	**INTERASSE** / distance	**108 mm**
		OFF-SET	**22,5 mm**
		PISTONCINI / small pistons	**ALLUMINIO ERGAL D34mm (n°4)** ergal aluminium D34mm (4pcs)
		GUARNIZIONE PARAPOLVERE / dust seal	**SI** / yes
		COLORE STANDARD / standard colour	**ANTRACITE** / charcoal
		PASTIGLIE / brake pads	**INCLUSE** / included
		CONTENUTO CONFEZIONE / pack contents	**PINZA DX + PINZA SX** / L+R brake calipers

ACCESSORI DI RICAMBIO (VENDUTI SINGOLARMENTE) spare parts (sold individually)	
CODICE Reference	**DESCRIZIONE** Description
AGPA134ZXC	**PASTIGLIE FRENO MESCOLA RACING (4 pz x blister)** brake pad with racing compound (4pcs x blister)
AGPA134EV2	**PASTIGLIE FRENO MESCOLA RACING (2 pz x blister)** brake pad with racing compound (2pcs x blister)
PA034	**PISTONE IN ALLUMINIO, Ø34** Ø34 aluminium pin
UP034	**GUARNIZIONE PISTONE Ø34** Ø34 piston seal
GP034	**GUARNIZIONE PARAPOLVERE Ø34** Ø34 dust seal
AGPET	**PERNO IN TITANIO** titanium pin
AGPEI	**PERNO INOX** stainless steel pin
AGM01	**MOLLA ANTI-VIBRAZIONI** anti-rattle spring
AGFS	**FERMO DI SICUREZZA** safety catch
RC012	**VALVOLA DI SPURGO M8x1** bleeding valve M8x1

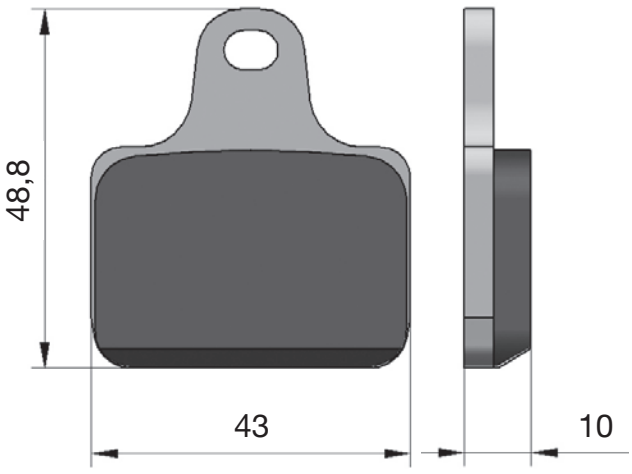

AGPA134 ZXC / EV2

PINZA FRENO CNC
CNC-worked brake caliper



CODICE Reference	**DESCRIZIONE** Description	**CARATTERISTICHE TECNICHE** Technical details	
PZ005	**PINZA FRENO CNC MONOBLOCCO** Monoblock cnc-worked brake caliper	**INTERASSE** / distance	**100 mm**
		OFF-SET	**30 mm**
		PISTONCINI / small pistons	**TITANIO AUTOVENTILATI, N°2 D34mm + N°2 D38mm** titanium-made, self-ventilated, D34mm (2pcs) + D38mm (2pcs)
		GUARNIZIONE PARAPOLVERE / dust seal	**No**
		COLORE / colour	**OSSIDAZIONE; oxidation**
		PASTIGLIE / brake pads	**NON INCLUSE** / not included
		N° PASTIGLIE X PINZA N° of brake pads per caliper	**2 pz** / 2pcs
		CONTENUTO CONFEZIONE / pack contents	**PINZA SINGOLA (DX oppure SX)** single brake caliper (L or R)

ACCESSORI DI RICAMBIO (VENDUTI SINGOLARMENTE) / spare parts (sold individually)	
CODICE / Reference	**DESCRIZIONE** / Description
AGPA137ZXC	**PASTIGLIE FRENO MESCOLA RACING (2pz x blister)** / brake pad with racing compound (2pcs x blister)
PT034	**PISTONE AUTOVENTILATO IN TITANIO, Ø34** / self-ventilated piston, made in aluminium, Ø34
UP034	**GUARNIZIONE PISTONE Ø34** / Ø34 piston seal
PT038	**PISTONE AUTOVENTILATO IN TITANIO, Ø38** / self-ventilated piston, made in aluminium, Ø38
UP038	**GUARNIZIONE PISTONE Ø38** / Ø38 piston seal
AGM02	**MOLLA ANTI VIBRAZIONI** / anti-rattle spring
RC012	**VALVOLA DI SPURGO M8x1** / bleeding valve M8x1

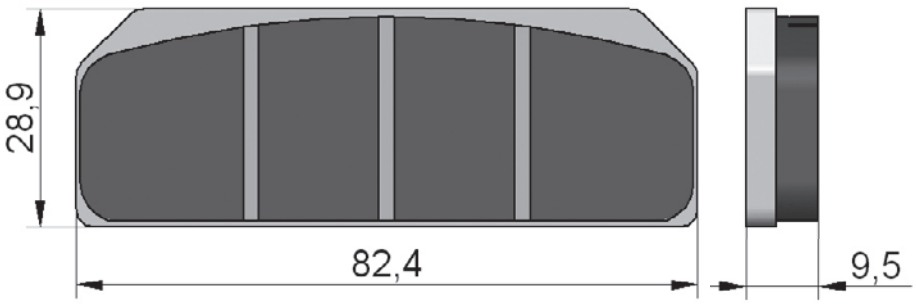

AGPA137 ZXC

Racing

ACCOSSATO

PINZE FRENO / brake caliper

PINZA FRENO FORGIATA
forged brake caliper



CODICE Reference	**DESCRIZIONE** Description	**CARATTERISTICHE TECNICHE** Technical details	
PZ007	**PINZA FRENO FORGIATA MONOBLOCCO** Monoblock forged brake caliper	**INTERASSE** / distance	**100 mm**
		OFF-SET	**30 mm**
		PISTONCINI / small pistons	**ALLUMINIO ERGAL D34mm (n°2) + (n°2) D38mm** ergal aluminium D34mm (2pcs) + (2pcs) D38mm
		GUARNIZIONE PARAPOLVERE / dust seal	**SI - yes**
		COLORE / colour	**OSSIDAZIONE NERA; black oxidation**
		PASTIGLIE / brake pads	**INCLUSE; included**
		CONTENUTO CONFEZIONE / pack contents	**PINZA SINGOLA (DX oppure SX)** single brake caliper (L or R)

ACCESSORI DI RICAMBIO (VENDUTI SINGOLARMENTE) / spare parts (sold individually)	
CODICE / Reference	**DESCRIZIONE** / Description
AGPA137ZXC	**PASTIGLIE FRENO MESCOLA RACING (2pz x blister)** / brake pad with racing compound (2pcs x blister)
PA034	**PISTONE IN ALLUMINIO, Ø34** / Ø34 aluminium pin
PA038	**PISTONE IN ALLUMINIO, Ø38** / Ø38 aluminium pin
RC012	**VALVOLA DI SPURGO M8x1** / bleeding valve M8x1
UP034	**GUARNIZIONE PISTONE Ø34** / Ø34 piston seal
UP038	**GUARNIZIONE PISTONE Ø38** / Ø38 piston seal
AGM02	**MOLLA ANTI VIBRAZIONI** / anti-rattle spring
GP034	**GUARNIZIONE PARAPOLVERE Ø34** / Ø34 dust seal
GP038	**GUARNIZIONE PARAPOLVERE Ø38** / Ø38 dust seal

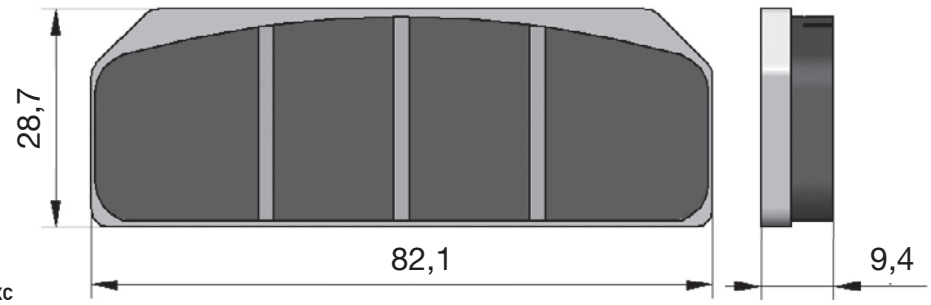

AGPA137 ZXC

PINZE RADIALI MOTO 3 CNC
moto 3 CNC-worked brake calipers



CODICE Reference	**DESCRIZIONE** Description	**CARATTERISTICHE TECNICHE** Technical details	
PZ006	**PINZA FRENO CNC MONOBLOCCO** Monoblock cnc-worked brake caliper	**INTERASSE** / distance	**60 mm**
		OFF-SET	**20,5 mm**
		PISTONCINI / small pistons	**TITANIO AUTOVENTILATI, N°2 D34mm** titanium-made, self-ventilated, D34mm (2pcs)
		GUARNIZIONE PARAPOLVERE / dust seal	**No**
		COLORE / colour	**OSSIDO DURO** / hard oxidation
		PASTIGLIE / brake pads	**NON INCLUSE** / not included
		N° PASTIGLIE X PINZA N° of brake pads per caliper	**2 pz** / 2pcs
		CONTENUTO CONFEZIONE / pack contents	**PINZA SINGOLA (DX oppure SX)** single brake caliper (L or R)

ACCESSORI DI RICAMBIO (VENDUTI SINGOLARMENTE) spare parts (sold individually)	
CODICE Reference	**DESCRIZIONE** Description
AGPA134ZXC	**PASTIGLIE FRENO MESCOLA RACING (4 pz x blister)** brake pad with racing compound (4pcs x blister)
AGPA134EV2	**PASTIGLIE FRENO MESCOLA RACING (2 pz x blister)** brake pad with racing compound (2pcs x blister)
PT034	**PISTONE AUTOVENTILATO IN TITANIO, Ø34** self-ventilated piston, made in aluminium, Ø34
UP034	**GUARNIZIONE PISTONE Ø34** Ø34 piston seal
AGPET	**PERNO IN TITANIO** titanium pin
AGM01	**MOLLA ANTI-VIBRAZIONI** anti-rattle spring
AGFS	**FERMO DI SICUREZZA** safety catch
RC006	**VALVOLA DI SPURGO M8x1** bleeding valve M8x1

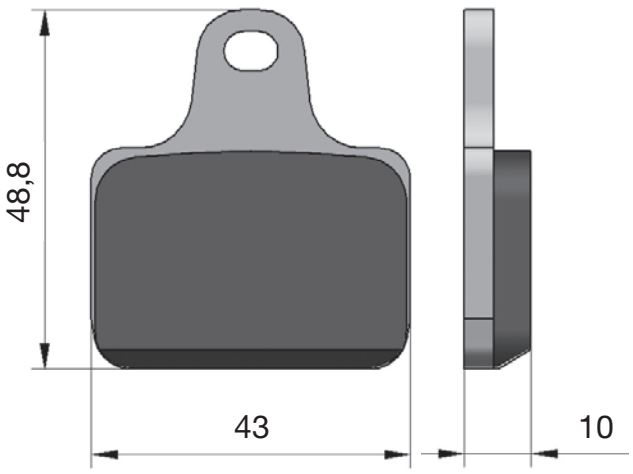

AGPA134 ZXC / EV2

PINZA POSTERIORE AD ATTACCO RADIALE MOTO 2
rear brake caliper with radial connection moto 2



CODICE Reference	**DESCRIZIONE** Description	**CARATTERISTICHE TECNICHE** Technical details	
PZ008	**PINZA FRENO CNC MONOBLOCCO** Monoblock cnc-worked brake caliper	**INTERASSE** / distance	**60mm**
		OFF-SET	**20,5mm**
		PISTONCINI / small pistons	**TITANIO AUTOVENTILATI D29,5mm N°2** titanium-made, self-ventilated, D29,5mm (2 pcs)
		GUARNIZIONE PARAPOLVERE / dust seal	**NO**
		COLORE / colour	**OSSIDO DURO** / hard oxidation
		PASTIGLIE / brake pads	**NON INCLUSE** / not included
		N° PASTIGLIE X PINZA N° of brake pads per caliper	**2 pz** / 2pcs
		CONTENUTO CONFEZIONE / pack contents	**PINZA SINGOLA (DX oppure SX)** single brake caliper (L or R)

ACCESSORI DI RICAMBIO (VENDUTI SINGOLARMENTE) spare parts (sold individually)	
CODICE Reference	**DESCRIZIONE** Description
AGPA134ZXC	**PASTIGLIE FRENO MESCOLA RACING (4 pz x blister)** brake pad with racing compound (4pcs x blister)
AGPA134EV2	**PASTIGLIE FRENO MESCOLA RACING (2 pz x blister)** brake pad with racing compound (2pcs x blister)
PT295	**PISTONE IN TITANIO AUTOVENTILATO, Ø 29,5** titanium-made, self-ventilated piston, Ø29,5
GP295	**GUARNIZIONE PISTONE Ø 29,5** Ø29,5 piston seal
AGPET	**PERNO IN TITANIO** titanium pin
AGM01	**MOLLA ANTI-VIBRAZIONI** anti-rattle spring
AGFS	**FERMO DI SICUREZZA** safety catch
RC006	**VALVOLA DI SPURGO M8x1** bleeding valve M8x1

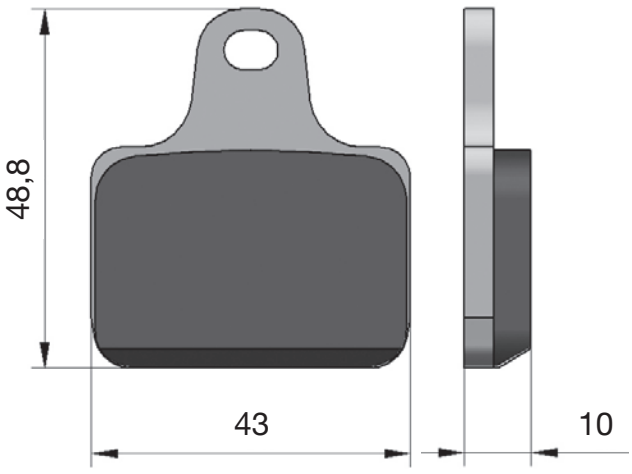

AGPA134 OR / ZXC / EV2

KIT PINZA E DISCO POSTERIORE MOTO 2
rear moto 2 brake caliper and rotor



CODICE Reference	DESCRIZIONE Description	COMPRENDE Contents
KITA20	KIT PINZA + DISCO POSTERIORE MOTO2 Rear brake caliper&rotor for Moto2	PZ008 + DK001

DESCRIZIONE DISCO DK001 DK001 description	CARATTERISTICHE TECNICHE DISCO Rotor technical details	
DISCO FLOTTANTE PER FRENO POSTERIORE MOTO2 Rear brake caliper&rotor for Moto2	Ø	220 mm
	SPESSORE / thickness	4,5 mm
	OFF-SET	8 mm
	PESO / weight	670 gr

Racing

ACCOSSATO

PARALEVA - DEFLECTOR







ACCOSSATO

Racing

PARALEVA - DEFLECTOR



SPIEGAZIONE / Details	
IL PARALEVA "DEFLECTOR" È STATO STUDIATO PER GARANTIRE LA MASSIMA SICUREZZA DEI PILOTI DURANTE LE GARE. DEFLECTOR PROTEGGE LA LEVA FRENO E FRIZIONE, DA QUALSIASI CONTATTO ACCIDENTALE CON ALTRI VEICOLI. LA RICERCATEZZA NELLO SVILUPPO HA PERMESSO DI RIDURRE AL MINIMO L'INCIDENZA AERODINAMICA. IL PARALEVA "DEFLECTOR" PUÒ ESSERE REGOLATO IN LUNGHEZZA E LATERALMENTE, ATTRAVERSO ADATTATORI. COMPATIBILE PER TUTTI I MANUBRI CON DIAMETRO INTERNO DA 12 A 20MM.	The « DEFLECTOR » handguard was designed to guarantee the total safety for the racers during the races. Deflector safeguard the clutch lever and the brake one from any kind of dangerous contact with other vehicles. The research during the planning of this product leads up to the reduction of the aerodynamics incidence. The « DEFLECTOR » handguard can be extend laterally and in length by adaptors, Deflector is suitable for any handlebar from 12 to 20 mm.

CODICE Reference	**DESCRIZIONE** Description	**VARIANTI TUBO** Hose variants	**VARIANTI ATTACCO** Joint variants	**VARIANTE COLORE** Colours variants
DE001	**PARALEVA ACCOSSATO DX TUBO IN ALLUMINIO** Accossato right handguard, aluminium hose	**TUBO DRITTO / TUBO PIEGATO A 90°** Straight hose / 90° bent hose	**12-16mm** **16-20mm**	**VEDI TABELLA A** see table A
DE002	**PARALEVA ACCOSSATO SX TUBO IN ALLUMINIO** Accossato left handguard, aluminium hose	**TUBO DRITTO / TUBO PIEGATO A 90°** Straight hose / 90° bent hose	**12-16mm** **16-20mm**	**VEDI TABELLA A** see table A
DE003	**PARALEVA ACCOSSATO DX + SX TUBO IN ALLUMINIO** Accossato left+right handguard, aluminium hose	**TUBO DRITTO / TUBO PIEGATO A 90°** Straight hose / 90° bent hose	**12-16mm** **16-20mm**	**VEDI TABELLA A** see table A
DE004	**PARALEVA ACCOSSATO DX TUBO IN ALLUMINIO + TERMINALE SX** Accossato right handguard, aluminium hose + left end	**TUBO DRITTO / TUBO PIEGATO A 90°** Straight hose / 90° bent hose	**12-16mm** **16-20mm**	**VEDI TABELLA A** see table A
DE005	**PARALEVA ACCOSSATO SX TUBO IN ALLUMINIO + TERMINALE DX** Accossato left handguard, aluminium hose + right end	**TUBO DRITTO / TUBO PIEGATO A 90°** Straight hose / 90° bent hose	**12-16mm** **16-20mm**	**VEDI TABELLA A** see table A
DE006	**PARALEVA ACCOSSATO DX TUBO IN CARBONIO** Accossato right handguard, carbon hose	**TUBO DRITTO / TUBO PIEGATO A 90°** Straight hose / 90° bent hose	**12-16mm** **16-20mm**	**VEDI TABELLA B** see table B
DE007	**PARALEVA ACCOSSATO SX TUBO IN CARBONIO** Accossato left handguard, carbon hose	**TUBO DRITTO / TUBO PIEGATO A 90°** Straight hose / 90° bent hose	**12-16mm** **16-20mm**	**VEDI TABELLA B** see table B
DE008	**PARALEVA ACCOSSATO DX + SX TUBO IN CARBONIO** Accossato left+right handguard, carbon hose	**TUBO DRITTO / TUBO PIEGATO A 90°** Straight hose / 90° bent hose	**12-16mm** **16-20mm**	**VEDI TABELLA B** see table B
DE009	**PARALEVA ACCOSSATO DX TUBO IN CARBONIO + TERMINALE SX** Accossato right handguard, carbon hose + left end	**TUBO DRITTO / TUBO PIEGATO A 90°** Straight hose / 90° bent hose	**12-16mm** **16-20mm**	**VEDI TABELLA B** see table B
DE010	**PARALEVA ACCOSSATO SX TUBO IN CARBONIO + TERMINALE DX** Accossato left handguard, carbon hose + right end	**TUBO DRITTO / TUBO PIEGATO A 90°** Straight hose / 90° bent hose	**12-16mm** **16-20mm**	**VEDI TABELLA B** see table B

TABELLA A / Table A - **PARALEVA IN ALLUMINIO** / aluminium handguard
1° PALLINO: COLORE TUBO / 1° dot: hose colours
2° PALLINO: COLORE ATTACCHI / 2° dot: joints colours

010	011	012	013	014	015
016	017	018	019	020	021
022	023	024	025	026	027
028	029	030	031	032	033
034	035	036	037	038	039
040	041	042	043	044	045

TABELLA B / Table B - **PARALEVA IN CARBONIO** / carbon handguard
1° PALLINO: COLORE TUBO IN CARBONIO / 1° dot: carbon-made hose colours
2° PALLINO: COLORE ATTACCHI / 2° dot: joints colours

046	047	048	049	050	051

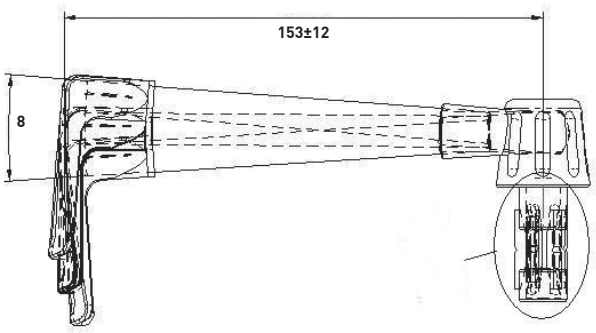

Racing

ACCOSSATO

PARALEVA - DEFLECTOR

APPLICATIVO UNIVERSALE, PER MANUBRI Ø INTERNO DA 12mm A 20mm

universal application for handlebars with inner ø from 12mm to 20mm

MARCA Brand	MODELLO Model	ANNI / years		Ø OEM (mm)
		DA / from	A / to	
APRILIA	RSV4	2009	2015	
	RSV1000	2004	2008	
	SHIVER 750	2007	2014	
	TUONO	2006	2009	
	TUONO V4	2011	2015	
BMW	S1000R	2014	2015	
	S1000RR	2009	2015	
DUCATI	848	2008	2011	12
	1098 / 1198	2007	2011	16 / 17,5
	DIAVEL	2011	2015	12
	MONSTER S4 - ST2	2007		
	MONSTER 821	2014	2015	17
	MONSTER 1100	2011	2013	14,5
	PANIGALE 899	2013	2015	
	PANIGALE 1199	2012	2015	
	PANIGALE 1299	2015	2016	
	STREETFIGHTER 848 / 1100	2008	2015	14,5
HONDA	TUTTI I MODELLI all models	TUTTI all		
KAWASAKI	ER-6N	2012	2015	
	ZX 250R	2009	2012	
	Z750	2004	2012	
	Z800	2013	2015	
	Z1000	2003	2015	
	Z1000 SX	2011	2015	
	ZX6R	2003	2015	
	ZX10R	2011	2016	
MV AGUSTA	B3 675 / 800	2012	2015	
	F3 675	2011	2015	18 / 19,5
	F3 675 / 800	2011	2015	18 / 19,5
	BRUTALE 4 cil. / cyl. - TUTTE / all	2010	2016	16 / 17,5
	F4 / TUTTE / all	2010	2015	18 / 19,5
SUZUKI	GLADIUS 650	2009	2015	
	GSR 600	2006	2011	
	GSR 750	2011	2015	
	GSXR 600 / 750	2000	2015	
	GSXR 1000	2003	2015	
	GSXS 1000	2015	2016	
TRIUMPH	STREET TRIPLE 675 R.	2007	2015	
YAMAHA	FAZER 600 - FZ6	2004	2006	
	FAZER 1000	2001	2012	
	MT-07	2014	2015	
	MT-09	2013	2015	
	T-Max 500 - 530	2002	2015	
	TDM 900	2002	2008	
	R 125	2008	2015	
	R1	1998	2015	
	R3	2015		
	R6	2006	2015	
	X-Max 400	2013	2015	

SGANCIO RAPIDO PER COMANDO GAS ACCOSSATO
quick disconnect for Accossato throttle control



CODICE Reference	**DESCRIZIONE** / Description
	SGANCIO RAPIDO PER COMANDO GAS ACCOSSATO quick disconnector for Accossato throttle control



LUNGHEZZA L1 L1 length
111
131
151
486
UNIVERSALI universal

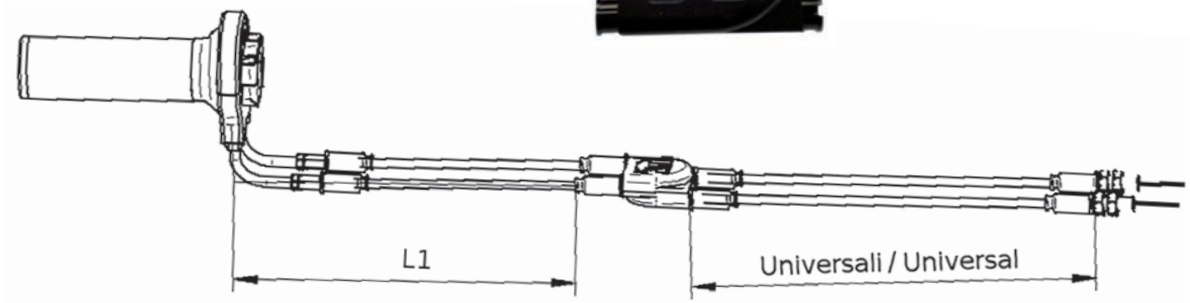

VANTAGGI	Pros
• **RIDUCE I TEMPI DI SOSTITUZIONE DEL COMANDO GAS** • **NON RICHIEDE INTERVENTI SUL MOTORE** • **NON NECESSITA REGOLAZIONE CAVI**	• time reduction in throttle control replacement • no need to act onto the engine; • no need for cable adjustment;

SPIEGAZIONE	Explanation
Il dispositivo nasce pensando alle esigenze del mondo delle competizioni motociclistiche, in cui l'eventuale rottura del comando gas (ad esempio in seguito a caduta) comporta la perdita di un turno di prove a causa del lungo e delicato lavoro di sostituzione dei cavi. **L'utente potrà montare e registrare il dispositivo, avendo cura di posizionare lo sdoppiatore in zona accessibile ma protetta dagli urti, procedendo al di fuori del clima caotico delle gare, con calma e perizia. Fornitosi di uno o più kit lato acceleratore di ricambio, in caso di necessità, potrà sostituirlo con un altro semplicemente svitando una vite e senza dover toccare alcun registro di tensionamento.** **Il lato motore viene fornito di cavi universali, mentre per il lato acceleratore è possibile scegliere la lunghezza dei cavi.**	This device was created to fulfil at best the need for speed in 2-wheel competition world. In case of any brakages of throttle control (i.e. due to a fall), time-taking cable replacement would mean to miss a turn during testing. Assemble and adjust the device carefully, by putting the splitter into a position easy to reach, but sheltered from impacts. By necessity, quick disconnector allows you to replace throttle control by simply unscrewing the specific screw. No need to act on tentioning adjuster. Engine side is provided with universal cables, whilst for gas control side cables are available in several lengths

Racing

ACCOSSATO

COMANDI GAS / throttle control



SPIEGAZIONE	Explanation
Altamente versatile e realizzato interamente in alluminio CNC, il comando gas Accossato è frutto di uno studio effettuato direttamente sui campi di gara dei trofei sportivi e del mondiale superbike. Il kit è composto da 2 gusci esterni e da 3 ruote di diverso diametro, che permetteno di rendere il comando più o meno rapido. Maggiore è il diametro della cam interna, maggiore è prontezza del comando gas.	Made in CNC-worked aluminium, Accossato throttle control was born from our gained experience on tracks directly. Highly versatile, it is provided with 2 external semi-shells and 3 inner cams, allowing to adjust throttle promptness. The bigger the diameter of the inner cam, the more the promptness of the throttle control.

CONTENUTO	Contents
I COMANDI GAS BICAVO (NO BMW) VENGONO FORNITI COMPLETI DI 3 CAM: Ø 40 - 43 - 45	Double-cable throtte controls (no BMW) are provided with 3 cams: Ø 40 - 43 - 45

COLORI MANOLOPOLE E CALOTTE caps and grips available in	
N **NERO** / black	**R** **ROSSO** / red
O **ARANCIONE** / orange	**S** **ARGENTO** / silver
Y **ORO** / gold	**G** **VERDE** / green
B **BLU** / blue	**T** **TITANIO** / titanium

COMANDI GAS / throttle control



CODICE Reference	DESCRIZIONE / Description
MY001	**COMANDO GAS IN ERGAL SENZA CAVI, CON MANOPOLE GR001 INCLUSE** ergal-made throttle control, without cables, provided with GR001 grips
MY002	**COMANDO GAS IN ERGAL COMPLETO DI CAVI (SPECIFICARE CODICE) E MANOPOLE GR001** ergal-made throttle control, provided with cables (specify reference) and GR001 grips
MY003	**COMANDO GAS IN ERGAL SENZA CAVI, CON MANOPOLE GR002 INCLUSE** ergal-made throttle control, without cables, provided with GR002 grips
MY004	**COMANDO GAS IN ERGAL COMPLETO DI CAVI (SPECIFICARE CODICE) E MANOPOLE GR002** ergal-made throttle control, provided with cables (specify reference) and GR002 grips
MY005	**COMANDO GAS SPECIFICO PER BMW, SENZA CAVI (USA CAVI ORIGINALI), CON MANOPOLE GR001 INCLUSE** BMW-specific throttle control, without cables (fits original cables only), provided with GR001 grips
MY006	**COMANDO GAS SPECIFICO PER BMW, SENZA CAVI (USA CAVI ORIGINALI), CON MANOPOLE GR002 INCLUSE** BMW-specific throttle control, without cables (fits original cables only), provided with GR002 grips

Racing

ACCOSSATO

TRASMISSIONI COMANDO GAS / gas-throttle cables

APPLICAZIONI / Motorcycles		ANNI / years		CODICE Reference
MARCA / Brand	MODELLO / Model	DA / from	A / to	
APRILIA	RSV 1000 FACTORY DREAM	2004	2008	AP002
	TUONO 1000 R-FACTORY	2006	2009	AP006
	RSV4 R 1000 RSV4 FACTORY 1000	2009	2010	AP010
	RSV4 APCR	2012	2013	AP012
DUCATI	749S / 749R / 749 DARK	2003	2006	DU001
	999 / 999S / 999R			
	848	2008	2010	DU006
	848 EVO	2011	2013	
	1098R	2008	2009	
	1198	2009	2011	
	1198S	2009	2010	
	1198R	2010		
	MULTISTRADA 1000	2003	2006	DU008
	MULTISTRADA 1000S	2005	2006	
	MULTISTRADA 1100	2007	2009	
	MULTISTRADA 1100S	2007	2009	
HONDA	CBR 1000	2004	2010	HN001
	CBR 600	2007	2014	HN008
KAWASAKI	NINJA ZX10R	2008	2009	ZX001
	ZX6R	2005	2010	ZX004
	NINJA 250	2008	2010	ZX010
	ZX10R	2011	2015	ZX011
	ZX10R	2016	2017	ZX012
SUZUKI	GSXR 1000	2007	2008	SU001
	GSXR 1000	2009	2015	SU004
	GSXR 600/750	2006	2010	SU007
TRIUMPH	DAYTONA 675	2007	2009	TR001
	DAYTONA 675	2013	2014	TR005
	THRUXTON	2010		TR004
YAMAHA	R6	2006	2007	YA001
	R6	2008	2015	YA003
	YZFR1	2004	2006	YA006
	YZFR1	2007	2008	YA009
	YZFR1	2009	2014	YA011
	YZFR1	2015	2016	YA013

COMANDI GAS / throttle control



CODICE Reference	DESCRIZIONE / Description	COLORE / Colour
MY011	**COMANDO GAS MONOCAVO, COMPLETO DI CAVI UNIVERSALI E MANOPOLE GR001** single cable throttle control, provided with universal cables and GR001 grips	N ■ NERO / black
MY012	**COMANDO GAS MONOCAVO, COMPLETO DI CAVI UNIVERSALI E MANOPOLE GR002** single cable throttle control, provided with universal cables and GR002 grips	
MY013	**COMANDO GAS MONOCAVO, SENZA CAVI (no cavi originali: monta solo CU002), CON MANOPOLE GR001 INCLUSE** single cable throttle control, without cables (fits CU002 only), with GR001 grips	
MY014	**COMANDO GAS MONOCAVO, SENZA CAVI (no cavi originali: monta solo CU002), CON MANOPOLE GR002 INCLUSE** single cable throttle control, without cables (fits CU002 only), with GR002 grips	

KIT CAVI UNIVERSALI
universal-cable kit



CODICE / Reference	DESCRIZIONE / Description
CU001	**TRASMISSIONI GAS UNIVERSALI PER COMANDO GAS BICAVO ACCOSSATO: MY001 - MY006** universal cable kit for Accossato double-cable throttle control, references MY001 - MY006
CU002	**TRASMISSIONI GAS UNIVERSALI PER COMANDO GAS MONOCAVO ACCOSSATO: MY011 - MY014** universal cable kit for Accossato singlw-cable throttle control, references MY011 - MY014

SPIEGAZIONE	Explanation
I kit cavi universali Accossato consentono di montare i nostri comandi gas su qualsiasi moto in commercio. PER L'INSTALLAZIONE DEL PRODOTTO, RIVOLGERSI A UN'OFFICINA SPECIALIZZATA.	Accossato universal-cable kits allow our throttle controls to be installed on any motorcycles. INSTALLATION BY AUTHORIZED WORKSHOPS ONLY.

Racing

ACCOSSATO

PULSANTIERE / button panels



SPIEGAZIONE	Explanation
LE PULSANTIERE RACING ACCOSSATO SONO INTERAMENTE REALIZZATE IN ALLUMINIO CNC E ANODIZZATE NERE. ESTREMA FACILITÀ D GUIDA DA PARTE DEL PILOTA, DURANTE L'UTILIZZO IN PISTA. PULSANTI IMPERMEABILI "IP67".	Accossato racing button panels are totally made in cnc-worked aluminium and black anodized. Extremely easy-to-use, they are designed to guarantee comfort and safety to the driver. Waterprooof buttons "IP67".



CODICE Reference	**DESCRIZIONE** Description	**CARATTERISTICHE TECNICHE** Technical details			
PS001	**PULSANTIERA 2 PULSANTI** 2-key button panel	**LATO** / side	**DESTRO** / right	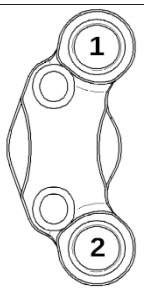	**BISTABILE** bistable **MONOSTABILE** monostable
		FUNZIONI / functions	→		
		LUNGH. CAVO / cable L	**55 cm**		
		CONNETTORE / connector	**N/P**		
		PESO / weight	**≈ 70 gr**		
		*** CAVALLOTTO** / riser	**No**		

CODICE Reference	**DESCRIZIONE** Description	**CARATTERISTICHE TECNICHE** Technical details	
PS006	**PULSANTIERA 2 PULSANTI PERSONALIZZABILE (compilare l'apposita scheda)[1]** customized 2-key button panel (specific form to fill in)[1]	**LATO** / side	**DX o SX** / R. or L.
		FUNZIONI PERSONALIZZABILI customizable functions	**vedi opzioni scheda[1]** see form options[1]
		LUNGH. CAVO / cable L	**55 cm**
		CONNETTORE / connector	**N/P**
		PESO / weight	**≈ 70 gr**
		*** CAVALLOTTO** / riser	**No**

DESCRIZIONE / Description	**COMPATIBILE CON POMPE FRENO** / suitable for brake m. cyl.
*** Non fornita di cavallotto: si assembla direttamente alla pompa freno, al posto del braccialetto originale** Assembly to master cylinder directly, in place of original riser.	**ACCOSSATO**
	BREMBO RCS
	→ originali, interasse fori 30-32mm → OEM, bolt pattern 30-32mm

PULSANTIERE / button panels



CODICE Reference	DESCRIZIONE Description	CARATTERISTICHE TECNICHE Technical details			
PS002	**PULSANTIERA 3 PULSANTI** 3-key button panel	**LATO** / side	**SINISTRO / LEFT**		**BISTABILE** bistable **MONOSTABILE** monostable **MONOSTABILE** monostable
		FUNZIONI / functions	→		
		LUNGH. CAVO / cable L	**55 CM**		
		CONNETTORE / connector	**N/P**		
		PESO / weight	**≈ 95 GR**		
		CAVALLOTTO / riser	**SI / YES**		

CODICE Reference	DESCRIZIONE Description	CARATTERISTICHE TECNICHE Technical details	
PS003	**PULSANTIERA 3 PULSANTI PERSONALIZZABILE (compilare l'apposita scheda)[1]** customized 3-key button panel (specific form to fill in)[1]	**LATO** / side	**DX o SX** / R. or L.
		FUNZIONI PERSONALIZZABILI customizable functions	**vedi opzioni scheda[1]** see form options[1]
		LUNGH. CAVO / cable L	**55 cm**
		CONNETTORE / connector	**N/P**
		PESO / weight	**≈ 95 gr**
		CAVALLOTTO / riser	**SI** / yes



CODICE Reference	DESCRIZIONE Description	CARATTERISTICHE TECNICHE Technical details			
PS004	**PULSANTIERA 5 PULSANTI** 5-key button panel	**LATO** / side	**SINISTRO** / left	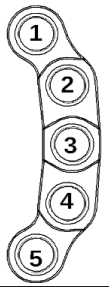	**MONOSTABILE** monostable **MONOSTABILE** monostable **MONOSTABILE** monostable **BISTABILE** bistable **MONOSTABILE** monostable
		FUNZIONI / functions	→		
		LUNGH. CAVO / cable L	**55 cm**		
		CONNETTORE / connector	**N/P**		
		PESO / weight	**≈ 145 gr**		
		CAVALLOTTO / riser	**SI** / yes		

CODICE Reference	DESCRIZIONE Description	CARATTERISTICHE TECNICHE Technical details	
PS005	**PULSANTIERA 5 PULSANTI PERSONALIZZABILE (compilare l'apposita scheda)[1]** customized 5-key button panel (specific form to fill in)[1]	**LATO** / side	**DX o SX** / R. or L.
		FUNZIONI PERSONALIZZABILI customizable functions	**vedi opzioni scheda[1]** see form options[1]
		LUNGH. CAVO / cable L	**55 cm**
		CONNETTORE / connector	**N/P**
		PESO / weight	**≈ 145 gr**
		CAVALLOTTO / riser	**SI** / yes

Racing

ACCOSSATO

KIT DI TRASFORMAZIONE FRIZIONE FILO - IDRAULICA
hydraulic-clutch transformation kit



SPIEGAZIONE	Explanation
GRAZIE ALLA SUA ALTA VERSATILITÀ, QUESTO KIT PERMETTE DI TRASFORMARE LA FRIZIONE A FILO IN FRIZIONE IDRAULICA. REALIZZATO IN ALLUMINIO E RICAVATO CNC, IL SISTEMA È AUTO-REGISTRANTE E RICHIEDE POCA MANUTENZIONE DA PARTE DELL'UTENTE. IL KIT È STATO STUDIATO PER RICHIEDERE MENO FORZA SULLA LEVA, IN MODO TALE DA AVERE UNA MIGLIORE RISPOSTA DURANTE IL CAMBIO DELLA MARCIA.	Highly versatile, this kit allows clutch lever to be turned into hydraulic clutch. Made in aluminium and CNC-worked, this self-adjusting system needs low maintenance. Less strength demanding, this transformation kit is specifically designed to improve reaction to gear shift.

ACCOSSATO

Racing

KIT DI TRASFORMAZIONE FRIZIONE FILO - IDRAULICA
hydraulic-clutch transformation kit

MARCA Brand	MODELLO Model	CC	ANNI / years		CODICE Reference
			DA / from	A / to	
APRILIA	MOTORE AM6	50	→	→	HS001
	RS 250	250	1995	2006	HS002
	4.5 RXV / SXV	450	→	→	HS046
	5.5 RXV / SXV	550	→	→	HS046
BETAMOTOR	MOTORE MINARELLI AM6	50	→	→	HS001
BENELLI	TNT Ø 14	1130	2004	2008	HS004
BMW	F 650	650	→	→	HS005
	F 800 S	800	→	→	HS005
	F 800 GS	800	→	→	HS006
CAGIVA	ALETTA ORO S2	→	1988		HS007
GUZZI	CALIFONIA STONE	→	→	→	HS008
	V35	→	→	→	HS009
HONDA	MOTORE MINARELLI (HM)	50	→	→	HS001
	CBF	600	2004	2005	HS017
	CBF	600	2006		HS002
	HORNET (pistone 14)	600	2001	2007	HS018
	HORNET (pistone 14)	900	1999	2007	HS018
KAWASAKI	ZX-6R	636	2005	2006	HS002
	Z / ZS 750	750	2005	2006	HS017
	Z 750	750	2007		HS029
	VN	800	→	→	HS030
	Z 1000	1000	2004		HS031
KTM	DUKE (L.B.)	620	→	→	HS033
SUZUKI	GSX-R	600	2002	2005	HS002
	GSX-R	600	2006	2008	HS037
	GSR	600	2005	2006	HS038
	GSR	600	2007		HS039
	SV NAKED	650	2000		HS047
	SV NAKED	650	2002	2006	HS002
	GSX-F	750	1998		HS033
	GSX-R	750	2002		HS033
	GSX-R	750	2006	2008	HS037
	GSX-R	1000	2004		HS005
	GSX-R	1000	2005	2006	HS002
	GSX-R	1000	2006		HS002
	GSX ANNI '80	1100	ANNI '80		HS041
TRIUMPH	SPEEDTRIPLE	900/1050	2005	2007	HS017
	TIGER	1050	2004		HS047
	TIGER	1050	2006		HS017
YAMAHA	FZ6 / FAZER	600	2004	2006	HS018
	MT	660	2003		HS044
	XT	660	2005	2006	HS017
	TDM	850	→	→	HS047
	TDM	900	2003		HS038
	FAZER	1000	2001		HS017
	FZ1	1000	2006		HS045
	R1	1000	2001		HS045

Racing

ACCOSSATO

SENSORI DEL CAMBIO / quick shifter



CODICE Reference	DESCRIZIONE Description	CARATTERISTICHE TECNICHE Technical details	
QS001	SENSORE DEL CAMBIO IN COMPRESSIONE quick shifter in compression	**MATERIALE** / raw material	**ALLUMINIO Al 7075** / Al 7075 Aluminium
		FORO ASTINA / holder pitch	**M6 DESTRORSO / SINISTRORSO** M6 righthanded / lefthanded
		DIMENSIONI / dimensions	**43 x 26 x 10**
		PESO / weight	**30gr**
		RANGE CARICO / load range	**min: 4Kg max: 25Kg**
		LUNGHEZZA CAVO / cable length	**25cm**
		CONNETTORE / connector	**2vie femmina** / 2-port female manifold **(mini universal Mate-N-lock)**
		SEGNALE DI USCITA / output signal	**NA (normalmente aperto)** / NO (normally open)

ACCESSORIO / accessory

CODICE Reference	DESCRIZIONE Description	CARATTERISTICHE TECNICHE Technical details	
CAV08	PROLUNGA CAVO extension cable	**LUNGHEZZA CAVO** cable length	**80 cm**
		CONNETTORE connector	**2 vie maschio** / 2-port male manifold (mini universal Mate-N-lock)
VM001	**KIT 1 x VITE + 1 x MOLLA PER SENSORE IN COMPRESSIONE** kit composed of 1 x screw + 1 x spring for quick shifter in compression		

SPIEGAZIONE	Explanation
Il sensore del cambio elettronico è stato studiato per garantire la regolazione delle sensibilità della cambiata, in base alle esigenze del pilota. Il sensore provvede a tagliare l'alimentazione al motore per consentire l'inserimento della marcia superiore. **Il pilota può dunque azionare il cambio a gas aperto.**	Accossato quick shifter was designed to allow the driver to adjust sensitivity of gear shift, as needed. Shifter disrupts power supplies to the engine, in order to upshift higher gear. Driver is allowed to operate the gear, by keeping full throttle.

REGOLAZIONE E MONTAGGIO	Adjustment & assembly
Per poter regolare questo tipo di sensore è necessario avvitare/svitare le viti (1) che agendo su delle molle ne aumentano o diminuiscono il carico. Se le viti vengono avvitate il sensore richiede una forza maggiore per essere azionato, viceversa svitandole le molle si distendono e il sensore risulta più "morbido". E' importante per il corretto funzionamento del sensore che le viti vengano strette o aperte sempre nello stesso modo (ad es. ¼ di giro sulla superiore e ¼ di giro sulla inferiore), questo consente alle 2 parti mobili di poter sempre scorrere parallelamente sui perni evitando che si creino degli attriti e conseguente indurimento del sensore.	You can regulate this kind of shifter by screwing or unscrewing the screw (1) which acting on the springs will increase or decrease the laden. If the screws are screwed the shifter needs an higher force to be activated on the other hand if you unscrew the spring, it will extend so the shifter will be more flexible. For the proper operation of the shifter, it is important that the screws are closed in and unfold always in the same way (for example ¼ rotation both for the higher and the lower ones) to allow both the moving parts to course in parallel on the keystone to avoid the creation of friction and the consequent hardening of the shifter.

SENSORI DEL CAMBIO / quick shifter



IN TRAZIONE
IN TRACTION

CODICE Reference	DESCRIZIONE Description	CARATTERISTICHE TECNICHE Technical details	
QS002	**SENSORE DEL CAMBIO IN TRAZIONE** Quick shifter in traction	**MATERIALE** / raw material	**ALLUMINIO Al 7075** / Al 7075 Aluminium
		FORO ASTINA / holder pitch	**M6 DESTRORSO / SINISTRORSO** M6 righthanded / lefthanded
		DIMENSIONI / dimensions	**44,5 x 22 x 10**
		PESO / weight	**25gr**
		RANGE CARICO / load range	**min: 3 Kg max: 30 Kg**
		LUNGHEZZA CAVO / cable length	**25cm**
		CONNETTORE / connector	**2vie femmina** / 2-port female manifold **(mini universal Mate-N-lock)**
		SEGNALE DI USCITA / output signal	**NA (normalmente aperto)** / NO (normally open)

ACCESSORIO / accessory

CODICE Reference	DESCRIZIONE Description	CARATTERISTICHE TECNICHE Technical details	
CAV08	**PROLUNGA CAVO** Extension cable	**LUNGHEZZA CAVO** / cable length	**80 cm**
		CONNETTORE / connector	**2 vie maschio** / 2-port male manifold **(mini universal Mate-N-lock)**
VM002	**KIT 1 x VITE + 1 x MOLLA PER SENSORE IN TRAZIONE** kit composed of 1 x screw + 1 x spring for quick shifter in traction		

SPIEGAZIONE	Explanation
IL SENSORE DEL CAMBIO ELETTRONICO È STATO STUDIATO PER GARANTIRE LA REGOLAZIONE DELLE SENSIBILITÀ DELLA CAMBIATA, IN BASE ALLE ESIGENZE DEL PILOTA. IL SENSORE PROVVEDE A TAGLIARE L'ALIMENTAZIONE AL MOTORE PER CONSENTIRE L'INSERIMENTO DELLA MARCIA SUPERIORE. **IL PILOTA PUÒ DUNQUE AZIONARE IL CAMBIO A GAS APERTO.**	Accossato quick shifter was designed to allow the driver to adjust sensitivity of gear shift, as needed. Shifter disrupts power supplies to the engine, in order to upshift higher gear. Driver is allowed to operate the gear, by keeping full throttle.

REGOLAZIONE E MONTAGGIO	Adjustment & assembly
PER POTER REGOLARE QUESTO TIPO DI SENSORE È NECESSARIO AVVITARE/SVITARE LE VITI (1) CHE AGISCONO SU DELLE MOLLE. E' IMPORTANTE UTILIZZARE LA STESSA ACCORTEZZA NELL'EFFETTUARE L'OPERAZIONE DI REGOLAZIONE DEL CARICO AVVITANDO E SVITANDO LE BRUGOLE NELLO STESSO MODO DESCRITTO PER L'ALTRO SENSORE. PER AVVITARE E SVITARE LE BRUGOLE È NECESSARIO PRIMA SVITARE I GRANI (2), PORTARE IL SENSORE AL CARICO DESIDERATO E INSERIRE NUOVAMENTE I GRANI AVVITANDOLI A BATTUTA, QUESTO PER EVITARE CHE LE BRUGOLE SI SVITINO E IL SENSORE PERDA LA SENSIBILITÀ DESIDERATA DAL PILOTA DURANTE L'UTILIZZO DELLA MOTO.	You can regulate this kind of shifter by screwing or unscrewing the screw (1) which acts on the springs. It is important to be careful by carrying out the regulation of the charge screwing and unscrewing the hex screw in the same way as the AG-SENS-01. When you have to screw and unscrew the hex screw before it is necessary to unscrew the grub screw (2) then you have to take the sensor to the desired load and put again the grub screw, screwing them until the end to avoid the hex screws go away and the sensor loose the sensibility desired to the pilot during the use of the motorcycle.

Racing

ACCOSSATO

COMANDO FRIZIONE A CAVO / cable clutch control

UNIVERSALE
UNIVERSAL



BREVETTATO
PATENTED















ACCOSSATO

COMANDO FRIZIONE A CAVO / cable clutch control



CODICE Reference	DESCRIZIONE Description	INTERASSI DISPONIBILI Available distances	COLORI * Colours*	OPZIONI LEVA Lever options
CF001	**COMANDO FRIZIONE LEVA SNODATA STANDARD** clutch control standard folding lever	24 mm 29 mm 32 mm 34 mm	N **NERO** / black O **ARANCIONE** / orange Y **ORO** / gold B **BLU** / blue R **ROSSO** / red S **ARGENTO** / silver G **VERDE** / green T **TITANIO** / titanium	RST
CF002	**COMANDO FRIZIONE CON ATTACCO MICRO (micro non incluso)** provided with switch hole (switch not included)			
CF003	**COMANDO FRIZIONE CON BRACCIALETTO IN COLORE TITANIO** with hose clamp in titanium colour			
CF004	**COMANDO FRIZIONE CON MICRO INCLUSO** with switch included			
CF005	**COMANDO FRIZIONE CON MICRO E SUPPORTO SPECCHIETTO INCLUSI** with switch and mirror holder included			

*** PERNO DI REGOLAZIONE ED IMPUGNATURA: STESSO COLORE** / adjusting knob & handle: same color

TUTTE LE LEVE HANNO LUNGHEZZA STANDARD / all standard-length levers

ACCESSORI / accessories

	CODICE Reference	DESCRIZIONE / Description
	MH005 *	**SUPPORTO SPECCHIETTO RICAVATO CNC, FILETTO M8, PER COMANDI FRIZIONE ACCOSSATO: CF001 - CF015** cnc-worked mirror holder, M8 screw pitch, suitable for Accossato clutch controls: CF001 - CF015
	MH006 *	**SUPPORTO SPECCHIETTO RICAVATO CNC, FILETTO M10x1,25 PER COMANDI FRIZIONE ACCOSSATO: CF001 - CF015** cnc-worked mirror holder, M10x1,25 screw pitch, suitable for Accossato clutch controls: CF001 - CF015

*** FOTO A SOLO SCOPO ILLUSTRATIVO** / picture for illustrative purposes only

Racing

ACCOSSATO

COMANDO FRIZIONE A CAVO "REVOLUTION"
cable "revolution" clutch control



CODICE Reference	DESCRIZIONE Description	INTERASSI DISPONIBILI Available distances
CF011	**COMANDO FRIZIONE REVOLUTION** revolution clutch control	
CF012	**COMANDO FRIZIONE CON ATTACCO MICRO (micro non incluso)** provided with switch hole (switch not included)	**24 mm**
CF013	**COMANDO FRIZIONE CON BRACCIALETTO IN COLORE TITANIO** with hose clamp in titanium colour	**29 mm**
CF014	**COMANDO FRIZIONE CON MICRO INCLUSO** with switch included	**32 mm** **34 mm**
CF015	**COMANDO FRIZIONE CON MICRO E SUPPORTO SPECCHIETTO INCLUSI** with switch and mirror holder included	













ACCOSSATO

Racing

COMANDO FRIZIONE A CAVO "REVOLUTION"
cable "revolution" clutch control

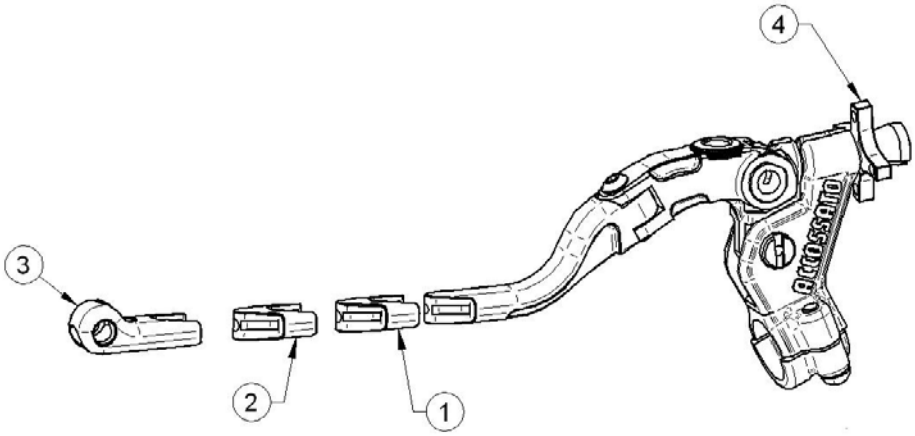

LEVA CORTA / Short lever

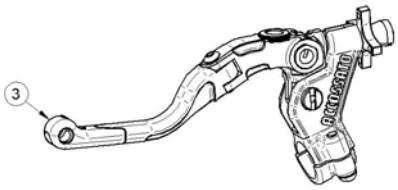

IMPUGNATURA + CODINO
handle + final insert

LEVA MEDIA / Medium lever

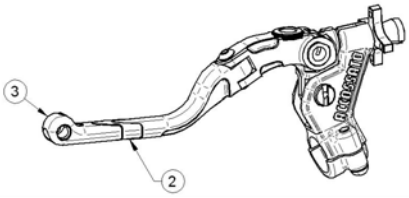

IMPUGNATURA + INSERTO (2) + CODINO
handle + second insert + final insert

LEVA LUNGA / Long lever

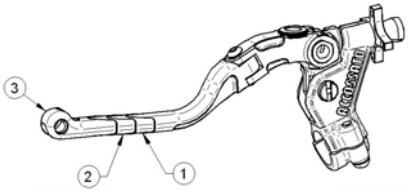

IMPUGNATURA + INSERTO (1) + INSERTO (2) + CODINO
handle + first insert + second insert + final insert

INSERTI DI RICAMBIO / spare-part insets

CODICE Reference	**DESCRIZIONE** Description	**COLORI *** Colours*	**NOTE** Notes
IN001	**INSERTO + VITI** insert + screws	**N** **NERO** / black **O** **ARANCIONE** / orange **Y** **ORO** / gold **B** **BLU** / blue **R** **ROSSO** / red **S** **ARGENTO** / silver **G** **VERDE** / green	***** **inserto (2) solo in nero** second insert (2) in black color only
IN003	**CODINO** final insert		****** **PERNO DI REGOLAZIONE E CODINO: STESSO COLORE** adjusting knob & final insert: same color

ACCESSORI / accessories

	CODICE Reference	**DESCRIZIONE** / Description
	**MH005 ***	**SUPPORTO SPECCHIETTO RICAVATO CNC, FILETTO M8, PER COMANDI FRIZIONE ACCOSSATO: CF001 - CF015** cnc-worked mirror holder, M8 screw pitch, suitable for Accossato clutch controls: CF001 - CF015
	**MH006 ***	**SUPPORTO SPECCHIETTO RICAVATO CNC, FILETTO M10x1,25 PER COMANDI FRIZIONE ACCOSSATO: CF001 - CF015** cnc-worked mirror holder, M10x1,25 screw pitch, suitable for Accossato clutch controls: CF001 - CF015

*** FOTO A SOLO SCOPO ILLUSTRATIVO** / picture for illustrative purposes only

Racing

ACCOSSATO

COMANDO FRIZIONE A CAVO / cable clutch control

















ACCOSSATO

Racing

COMANDO FRIZIONE A CAVO / cable clutch control

CODICE Reference	DESCRIZIONE Description	INTERASSI DISPONIBILI Available distances	COLORI * Colours*
CF006	COMANDO FRIZIONE LEVA SNODATA STANDARD clutch control standard folding lever	24 mm 29 mm 32 mm 34 mm	N NERO / black O ARANCIONE / orange Y ORO / gold B BLU / blue R ROSSO / red S ARGENTO / silver G VERDE / green T TITANIO / titanium
CF007	COMANDO FRIZIONE CON ATTACCO MICRO (micro non incluso) provided with switch hole (switch not included)		
CF008	COMANDO FRIZIONE CON BRACCIALETTO IN COLORE TITANIO with hose clamp in titanium colour		
CF009	COMANDO FRIZIONE CON MICRO INCLUSO with switch included		
CF010	COMANDO FRIZIONE CON MICRO E SUPPORTO SPECCHIETTO INCLUSI with switch and mirror holder included		

*** PERNO DI REGOLAZIONE ED IMPUGNATURA: STESSO COLORE** / adjusting knob & handle: same color

TUTTE LE LEVE HANNO LUNGHEZZA STANDARD / all standard-length levers

ACCESSORI / accessories

	CODICE Reference	DESCRIZIONE / Description
	MH005 *	SUPPORTO SPECCHIETTO RICAVATO CNC, FILETTO M8, PER COMANDI FRIZIONE ACCOSSATO: CF001 - CF015 cnc-worked mirror holder, M8 screw pitch, suitable for Accossato clutch controls: CF001 - CF015
	MH006 *	SUPPORTO SPECCHIETTO RICAVATO CNC, FILETTO M10x1,25 PER COMANDI FRIZIONE ACCOSSATO: CF001 - CF015 cnc-worked mirror holder, M10x1,25 screw pitch, suitable for Accossato clutch controls: CF001 - CF015

*** FOTO A SOLO SCOPO ILLUSTRATIVO** / picture for illustrative purposes only

LEVE DI RICAMBIO
spare part levers

PER COMANDO FRIZIONE ACCOSSATO
for Accossato clutch control: **53 - 54**

PER POMPE FRENO/FRIZIONE ACCOSSATO E BREMBO
for Accossato & Brembo master cylinders: **55 - 57**

A CONTROLLO REMOTO
remote adjusting levers: **58 - 60**

A CONTROLLO ELETTRONICO
mechanized levers: **61**

PER POMPE FRENO/FRIZIONE OEM
for Oem master cylinders: **62 -67**

PER POMPE NISSIN
for Nissin master cylinders: **68**

ACCOSSATO

Racing

LEVE SNODATE: RICAMBIO PER COMANDI FRIZIONE
folding levers: spare parts for clutch controls



CODICE Reference	DESCRIZIONE Description	INTERASSI DISPONIBILI Available distances	COLORI IMPUGNATURA Handle colours	OPZIONI Options
LV016	**RICAMBIO LEVA PER COMANDO FRIZIONE CF001 - CF005** spare lever for clutch control CF001 - CF005	**24 mm** **29 mm** **32 mm** **34 mm**	**N** **NERO** / black **O** **ARANCIONE** / orange **Y** **ORO** / gold **B** **BLU** / blue **R** **ROSSO** / red **S** **ARGENTO** / silver **G** **VERDE** / green **T** **TITANIO** / titanium*	**RST** **asola passaggio aria** air-stream eyelet
LV017	**RICAMBIO LEVA PER COMANDO FRIZIONE CF006 - CF010** spare lever for clutch control CF006 - CF010			

*** SOLO** / only **LV016**

TUTTE LE LEVE HANNO LUNGHEZZA STANDARD / all standard-length levers



Racing

ACCOSSATO

LEVA SNODATA CON IMPUGNATURA "REVOLUTION": RICAMBIO PER COMANDO FRIZIONE

folding lever with "Revolution" handle: spare part for clutch control



CODICE Reference	DESCRIZIONE Description	INTERASSI DISPONIBILI Available distances
LV025	**RICAMBIO LEVA PER COMANDO FRIZIONE CF011 - CF015 CON IMPUGNATURA REVOLUTION** "Revolution-handle" clutch lever for clutch control CF011 - CF015	**24 mm** **29 mm** **32 mm** **34 mm**
	RST DI SERIE RST equipped	

INSERTI DI RICAMBIO

spare-part insets

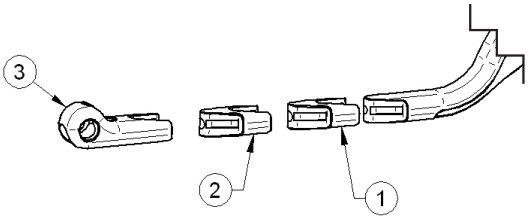

LEVA CORTA / Short lever

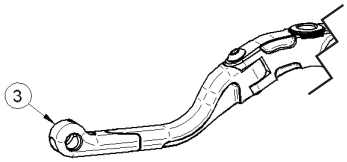

IMPUGNATURA + CODINO
handle + final insert

LEVA MEDIA / Medium lever

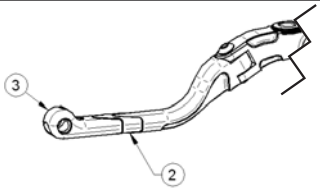

IMPUGNATURA + INSERTO (2) + CODINO
handle + second insert + final insert

LEVA LUNGA / Long lever

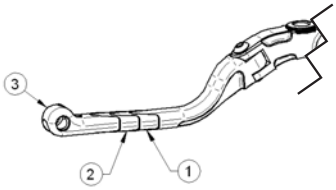

IMPUGNATURA + INSERTO (1) + INSERTO (2) + CODINO
handle + first insert + second insert + final insert

INSERTI DI RICAMBIO

spare-part insets

CODICE Reference	DESCRIZIONE Description	COLORI * Colours*
IN001	**INSERTO + VITI** insert + screws	**N** **NERO** / black **O** **ARANCIONE** / orange **Y** **ORO** / gold **B** **BLU** / blue **R** **ROSSO** / red **S** **ARGENTO** / silver **G** **VERDE** / green
IN003	**CODINO** final insert	

ACCOSSATO

Racing

LEVE FISSE: RICAMBIO PER POMPE FRENO/FRIZIONE
fix levers: spare parts for brake/clutch master cylinders



CODICE Reference	**DESCRIZIONE** Description	**INTERASSI DISPONIBILI** Available distances	**OPZIONI LEVA** Lever options	**COLORI *** Colours*
LV001	**LEVA FRENO FISSA, PER POMPE RADIALI ACCOSSATO E BREMBO** fix brake lever, for Accossato and Brembo radial master cylinders	**18 mm** **19 mm** **20 mm** **21 mm** **PRS (17-18-19) mm**	**LUNGA** / long: **17cm** **CORTA** / short: **15cm**	**N** **NERO** / black **O** **ARANCIONE** / orange **Y** **ORO** / gold **B** **BLU** / blue **R** **ROSSO** / red **S** **ARGENTO** / silver **G** **VERDE** / green
	RST DI SERIE RST equipped			
LV002	**LEVA FRIZIONE FISSA, PER POMPE RADIALI ACCOSSATO E BREMBO** fix clutch lever, for Accossato and Brembo radial master cylinders	**16 mm** **18 mm** **PRS (15-16-17) mm**	**LUNGA** / long: **17cm** **CORTA** / short: **15cm**	
	RST DI SERIE RST equipped			

Racing

ACCOSSATO

LEVA SNODATA CON IMPUGNATURA "REVOLUTION": RICAMBIO PER POMPE FRENO/FRIZIONE

folding lever with "Revolution" handle: spare part for brake/clutch master cylinders



CODICE Reference	DESCRIZIONE Description	INTERASSI DISPONIBILI Available distances
LV003	**LEVA FRENO CON IMPUGNATURA REVOLUTION, PER POMPE RADIALI ACCOSSATO E BREMBO** "Revolution-handle" brake lever, for Accossato and Brembo radial master cylinders	**18 mm** **19 mm** **20 mm** **21 mm** **PRS (17-18-19) mm**
	RST DI SERIE RST equipped	
LV004	**LEVA FRIZIONE CON IMPUGNATURA REVOLUTION, PER POMPE PRS ACCOSSATO** "Revolution-handle" clutch lever, for Accossato PRS master cylinders	**16 mm** **18 mm** **PRS (15-16-17) mm**
	RST DI SERIE RST equipped	

SPIEGAZIONE	Explanation
LEVA SNODATA ANTI-ROTTURA, BRAVETTATA ACCOSSATO. IN CASO DI CADUTA, LO SNODO CONSENTE DI POTER RIPRENDERE LA CORSA, CON UN SEMPLICE GESTO DELLA MANO.	Anti-breaking patented Accossato lever. In the event of fall, its junction allows you to retake the race by a simple hand movement, with no need to brake.

LEVA CORTA / Short lever

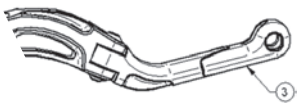

IMPUGNATURA + CODINO
handle + final insert

LEVA MEDIA / Medium lever

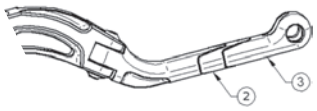

IMPUGNATURA + INSERTO (2) + CODINO
handle + second insert + final insert

LEVA LUNGA / Long lever

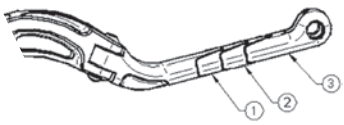

IMPUGNATURA + INSERTO (1) + INSERTO (2) + CODINO
handle + first insert + second insert + final insert

INSERTI DI RICAMBIO

spare-part insets

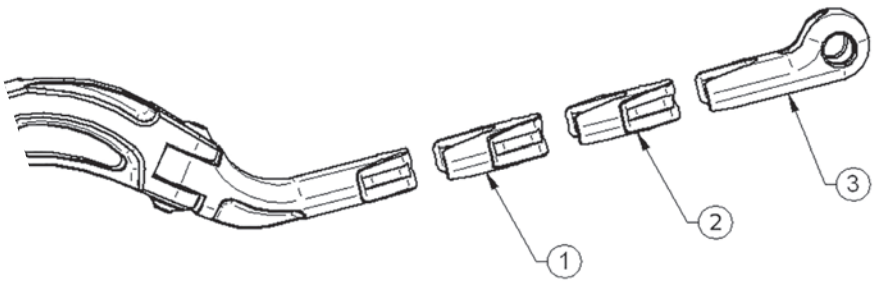

CODICE Reference	DESCRIZIONE Description	COLORI INSERTO + CODINO Insets colours
IN001	**INSERTO + VITI** insert + screws	**N** **NERO** / black **O** **ARANCIONE** / orange **Y** **ORO** / gold **B** **BLU** / blue **R** **ROSSO** / red **S** **ARGENTO** / silver **G** **VERDE** / green
IN003	**CODINO** final insert	

LEVE SNODATE: RICAMBIO PER POMPE FRENO/FRIZIONE
folding levers: spare parts for brake/clutch master cylinders



CODICE Reference	DESCRIZIONE Description	INTERASSI DISPONIBILI Available distances	OPZIONI Options	COLORI IMPUGNATURA Handle colours
LV005	**LEVA FRENO RADIALE SNODATA PER POMPE FRENO ACCOSSATO E BREMBO** folding radial brake lever for Accossato and Brembo brake master cylinders	**16 mm** **18 mm** **19 mm** **20 mm** **21 mm** **PRS (17-18-19) mm**	**RST** **LUNGA** / long: **17 cm** **CORTA** / short: **15 cm**	**N** **NERO** / black **O** **ARANCIONE** / orange **Y** **ORO** / gold **B** **BLU** / blue **R** **ROSSO** / red **S** **ARGENTO** / silver **G** **VERDE** / green
	MODELLO K DI SERIE K equipped			
LV006	**LEVA FRIZIONE RADIALE SNODATA PER POMPE FRIZIONE ACCOSSATO E BREMBO** folding radial clutch lever for Accossato and Brembo clutch master cylinders	**16 mm** **18 mm** **PRS (15-16-17) mm**	**RST** **LUNGA** / long: **17 cm** **CORTA** / short: **15 cm**	
	MODELLO K DI SERIE K equipped			

SPIEGAZIONE	Explanation
LEVA SNODATA ANTI-ROTTURA, BRAVETTATA ACCOSSATO. IN CASO DI CADUTA, LO SNODO CONSENTE DI POTER RIPRENDERE LA CORSA, CON UN SEMPLICE GESTO DELLA MANO.	Anti-breaking patented Accossato lever. In the event of fall, its junction allows you to retake the race by a simple hand movement, with no need to brake.

Racing

ACCOSSATO

LEVE A CONTROLLO REMOTO INTEGRATO
brake lever with integrated remote adjuster



CODICE Reference	DESCRIZIONE Description	COLORI IMPUGNATURA Handle colours	OPZIONI LEVA Lever options	OPZIONI SUPPORTO Holder Options
RA001	**LEVA FRENO A CONTROLLO REMOTO INTEGRATO PER POMPE OEM** brake lever with integrated 90° remote adjuster for oem master cylinders	**N** **NERO** / black **O** **ARANCIONE** / orange **Y** **ORO** / gold **B** **BLU** / blue **R** **ROSSO** / red **S** **ARGENTO** / silver **G** **VERDE** / green	**RST**	**35 mm** **60 mm**

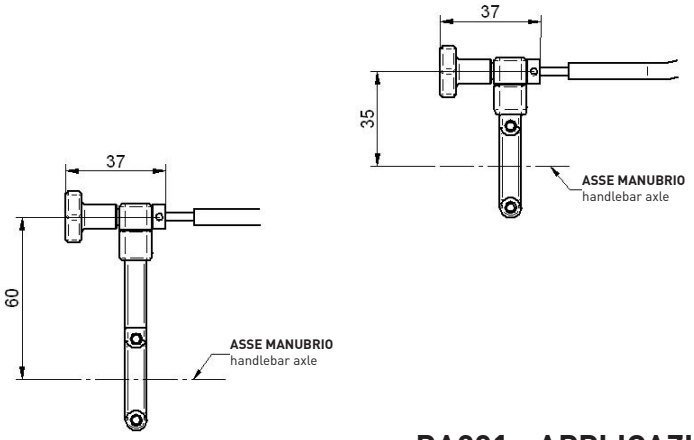

RICAMBI SUPPORTO / spare-part holder

CODICE Reference	DESCRIZIONE Description	ALTEZZA Available heigth
RS001	**RICAMBIO SUPPORTO CORTO** short spare-part holder	**35 mm**

CODICE Reference	DESCRIZIONE Description	ALTEZZA Available heigth
RS002	**RICAMBIO SUPPORTO LUNGO** long spare-part holder	**60 mm**

RA001 - APPLICAZIONI / application list

CC	MODELLO Model	ANNI / years DA / from	 A / to
APRILIA			
1000	RSV R	2004	2008
1000	RSV R Dream	2004	2008
1000	RSV R Factory	2004	2008
1000	RSV4	2009	2017
1000	RSV4 Factory	2009	2017
1000	RSV4 R	2010	2017
BENELLI			
1130	TnT R160	2010	2012
DUCATI			
749	749	2003	2006
749	749 DARK	2004	2006
749	749 R	2004	2006
749	749 S	2003	2006
848	848	2008	2017
848	854 EVO	2012	2017
999	999	2003	2006
999	999 R	2003	2006
999	999 S	2003	2006
1000	MONSTER S4R	2007	2008

CC	MODELLO Model	ANNI / years DA / from	 A / to
1000	MONSTER S4Rs	2006	2008
1100	MONSTER	2009	2013
1100	MONSTER EVO	2011	2017
1100	MONSTER S	2009	2013
KTM			
990	SUPER DUKE	2005	2015
990	SUPER DUKE R	2007	2017
1190	RC8	2008	2015
1190	RC8 R	2009	2014
MOTO GUZZI			
1225	MGS-01 Corsa	2004	2014
MOTO MORINI			
1200	CORSARO	2007	2017
1200	CORSARO CARBON	2007	2017
1200	CORSARO VELOCE	2007	2017
1200	GRANPASSO	2008	2017
TRIUMPH			
675	DAYTONA R	2011	2013
1050	SPEED TRIPLE	2010	2015

ACCOSSATO

Racing

LEVE A CONTROLLO REMOTO / remote-adjusting levers

CODICE Reference	DESCRIZIONE Description	COLORI IMPUGNATURA Handle colours	OPZIONI LEVA Lever options	OPZIONI SUPPORTO Holder Options
RA002	LEVA FRENO A CONTROLLO REMOTO INTEGRATO PER POMPE OEM brake lever with integrated 90° remote adjuster for oem master cylinders	N NERO / black O ARANCIONE / orange Y ORO / gold B BLU / blue R ROSSO / red S ARGENTO / silver G VERDE / green	RST	35 mm 60 mm

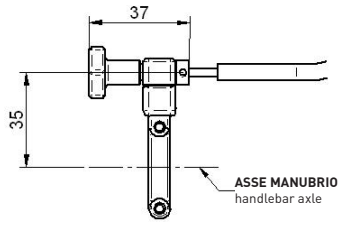

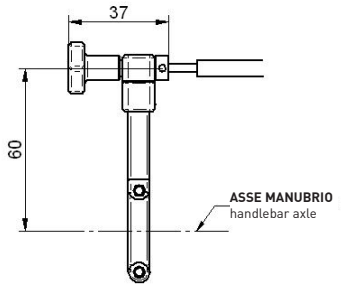

RICAMBI SUPPORTO / spare-part holder

CODICE Reference	DESCRIZIONE Description	ALTEZZA Available heigth
RS001	RICAMBIO SUPPORTO CORTO short spare-part holder	35 mm

CODICE Reference	DESCRIZIONE Description	ALTEZZA Available heigth
RS002	RICAMBIO SUPPORTO LUNGO long spare-part holder	60 mm

RA002 - APPLICAZIONI / application list

CC	MODELLO Model	ANNI / years DA / from	A / to
	DUCATI		
1200	SUPERBIKE PANIGALE R	2016	2016
1199	SUPERBIKE PANIGALE R	2017	2017
1198	SUPERBIKE PANIGALE R	2015	2015
1200	SUPERBIKE PANIGALE R USA	2016	2016
1199	SUPERBIKE PANIGALE R USA	2017	2017
1198	SUPERBIKE PANIGALE R USA	2015	2015
959	SUPERBIKE 959 PANIGALE ABS USA	2016	2017
955	SUPERBIKE 959 PANIGALE ABS THA	2016	2017
956	SUPERBIKE 959 PANIGALE ABS BRA	2017	2017
956	SUPERBIKE 959 PANIGALE ABS	2017	2017
955	SUPERBIKE 959 PANIGALE ABS	2016	2016
1198	SUPERBIKE 899 PANIGALE ABS	2015	2015
898	SUPERBIKE 899 PANIGALE ABS USA	2014	2015
898	SUPERBIKE 899 ABS THA	2015	2015
899	SUPERBIKE 899 PANIGALE ABS	2014	2014
1300	SUPERBIKE 1299S ABS	2016	2016
1299	SUPERBIKE 1299S ABS	2017	2017
1285	SUPERBIKE 1299S ABS	2015	2015
1300	SUPERBIKE 1299 ABS USA	2016	2016
1299	SUPERBIKE 1299 ABS USA	2017	2017
1285	SUPERBIKE 1299 ABS USA	2015	2015
1299	SUPERBIKE 1299A ABS BRASIL	2016	2016
1299	SUPERBIKE 1299S 90 ANNIVERSARIO	2017	2017
1300	SUPERBIKE 1299 ABS	2016	2016
1299	SUPERBIKE 1299 ABS	2017	2017
1285	SUPERBIKE 1299 ABS	2015	2015

CC	MODELLO Model	ANNI / years DA / from	A / to
1300	SUPERBIKE 1299 ABS USA	2016	2016
1299	SUPERBIKE 1299 ABS USA	2017	2017
1285	SUPERBIKE 1299 ABS USA	2015	2015
1299	SUPERBIKE 1299 ABS BRASIL	2016	2016
1200	SUPERBIKE 1199 PANIGALE	2012	2013
1200	SUPERBIKE 1199 PANIGALE USA	2012	2013
1200	SUPERBIKE 1199 PANIGALE S	2012	2013
1200	SUPERBIKE 1199 PANIGALE S USA	2012	2013
1200	SUPERBIKE 1199 PANIGALE S TRIC	2012	2013
1200	SUPERBIKE 1199 PANIGALE S ABS	2012	2014
1199	SUPERBIKE 1199 PANIGALE ABS	2015	2015
1198	SUPERBIKE 1199 PANIGALE S ABS	2014	2014
1200	SUPERBIKE PANIGALE R	2014	2014
1199	SUPERBIKE 1199 PANIGALE R	2013	2013
1200	SUPERBIKE 1199 PANIGALE R USA	2014	2014
1199	SUPERBIKE 1199 PANIGALE R USA	2013	2013
1200	SUPERBIKE 1199 PANIGALE ABS	2012	2014
1200	SUPERBIKE 1199 PANIGALE ABS US	2012	2014
1199	SUPERBIKE 1199 PANIGALE ABS BR	2015	2015
1198	SUPERBIKE 1199 PANIGALE ABS BR	2014	2014
1200	MONSTER 1200 S	2014	2017
1200	MONSTER 1200 S USA	2014	2017
1200	MONSTER 1200 S STRIPES	2015	2016
1200	MONSTER 1200 S STRIPES USA	2015	2016
1200	MONSTER 1200 R	2016	2017
1200	MONSTER 1200 R USA	2016	2017

Racing

ACCOSSATO

LEVE A CONTROLLO REMOTO / remote-adjusting levers



RA003



RA004

CODICE Reference	DESCRIZIONE Description	COLORI IMPUGNATURA Handle colours	OPZIONI LEVA Lever options	OPZIONI SUPPORTO Holder Options
RA003	**LEVA FRENO A CONTROLLO REMOTO INTEGRATO DRITTO, PER POMPE ACCOSSATO E BREMBO** brake lever with integrated straight remote adjuster, for Accossato and Brembo master cylinders	N **NERO** / black O **ARANCIONE** / orange Y **ORO** / gold B **BLU** / blue R **ROSSO** / red S **ARGENTO** / silver G **VERDE** / green	RST	35 mm 60 mm
RA004	**LEVA FRENO A CONTROLLO REMOTO INTEGRATO A 90° PER POMPE ACCOSSATO** brake lever with integrated 90° remote adjuster for Accossato master cylinders			

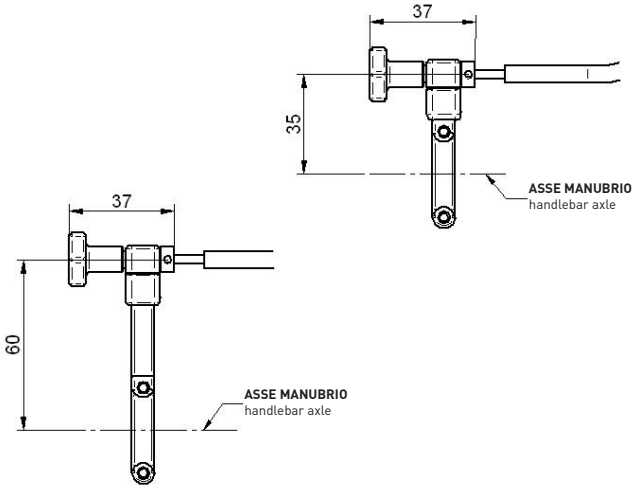

RICAMBI SUPPORTO / spare-part holder

CODICE Reference	DESCRIZIONE Description	ALTEZZA Available heigth
RS003	**RICAMBIO SUPPORTO CORTO PER RA003** short spare-part holder for RA003	35 mm
RS004	**RICAMBIO SUPPORTO LUNGO PER RA003** long spare-part holder for RA003	60 mm
RS005	**RICAMBIO SUPPORTO CORTO PER RA004** short spare-part holder for RA004	35 mm
RS006	**RICAMBIO SUPPORTO LUNGO PER RA004** long spare-part holder for RA004	60 mm

LEVE MOTORIZZATE / mechanized LEVERS



CODICE Reference	DESCRIZIONE Description	INTERASSI DISPONIBILI Available distances	COLORI Colours	OPZIONI LEVA Lever options
LM002	**LEVA FRENO A CONTROLLO ELETTRONICO PER POMPE ACCOSSATO E BREMBO (no RCS)** brake lever with electronic control, for Accossato and Brembo master cylinders (no RCS)	**16 mm** **18 mm** **19 mm** **20 mm** **21 mm** **PRS (17-18-19) mm**	**N** ■ **NERO** / black	**RST**

SPIEGAZIONE	Explanation
DISPOSITIVO BREVETTATO ACCOSSATO. LE LEVE TRADIZIONALI COL POMELLO DI REGOLAZIONE MANUALE RISULTANO TUTT'ALTRO CHE SEMPLICI DA REGOLARE SUL RETTILINEO, A 300KM/H. CON LE LEVE A CONTROLLO ELETTRONICO INVECE, È SUFFICIENTE AGIRE SUI 2 PULSANTI, PER OTTENERE UNA REGOLAZIONE SEMPLICE E PERFETTA PER LE ESIGENZA DI OGNI PILOTA.	Device patented by Acossato. Traditional levers have manual adjusting knob: not that easy for the driver to adjust, when riding at 300Km/h. On the contrary, with electronic-control levers adjustment is only about pushing the 2 instelled buttons: easy and fast. Perfect for all tastes.

LEVA FRENO PER POMPE BREMBO RCS
brake lever for Brembo rcs master cylinder



CODICE Reference	DESCRIZIONE Description
LV007	**LEVA FRENO PER POMPE BREMBO RCS 19X18 CNC** / brake lever for brembo rcs cnc master cylinder 19x18

Racing

ACCOSSATO

LEVE: RICAMBIO POMPE FRENO/FRIZIONE OEM
levers: spare parts for oem brake/clutch master cylinders



CODICE Reference	DESCRIZIONE Description	COLORI Colours	OPZIONI Options
LV008	**LEVA FRIZIONE REGOLABILE SNODATA** **• LUNGA: 17 cm** adjustable, folding clutch lever for clutch master cylinder • long: 17 cm	**N** **NERO** / black **O** **ARANCIONE** / orange **Y** **ORO** / gold **B** **BLU** / blue **R** **ROSSO** / red **S** **ARGENTO** / silver **G** **VERDE** / green	**RST**
LV009	**LEVA FRENO REGOLABILE SNODATA** **• LUNGA: 17 cm** adjustable, folding brake lever • long: 17 cm		

SPIEGAZIONE	Explanation
LEVA SNODATA ANTI-ROTTURA, REALIZZATA IN ALLUMINIO E BREVETTATA ACCOSSATO. IN CASO DI CADUTA, LO SNODO CONSENTE DI POTER RIPRENDERE LA CORSA, CON UN SEMPLICE GESTO DELLA MANO.	Anti-breaking patented Accossato lever, in aluminium raw material. In the event of fall, its junction allows you to retake the race by a simple hand movement, with no need to brake.

LV008 - APPLICAZIONI / application list

CC	MODELLO Model	ANNI / years DA / from	A / to
	APRILIA		
1000	ETV CAPO NORD	2001	2003
1000	ETV CAPO NORD	2004	2007
1000	ETV CAPO NORD RALLY	2004	
1000	RST FUTURA	2001	2003
1000	RSV	1998	2003
1000	RSV MILLE	2001	
1000	RSV SP	1999	
1000	SL FALCO	2000	2003
1000	TUONO	2002	2005
1000	TUONO FACTORY	2006	2010
1000	TUONO R	2006	2009
1200	DORSODURO	2011	2017
	DUCATI		
748	748	1999	2002
748	748 R	1999	2002
748	748 S	2000	2002
750	SUPERSPORT	1999	
900	MONSTER IE	2000	2001
900	SPORT 900	2002	
900	SUPERSPORT	1998	1999
900	SUPERSPORT IE	2000	2002
916	MONSTER S4	2001	2002
916	MONSTER S4 FOGGY	2002	
996	996	1999	2001
996	996 R	2001	
996	996 S	2001	
996	SPECIAL USA	1999	
996	SPS	1999	2000
998	998	2002	
998	MATRIX	2004	
998	998 R	2002	
998	998 S BAYLISS	2002	
999	S FINAL EDITION	2004	
1000	GT	2006	2010
1000	GT TOURING	2009	
1000	MONSTER	2003	2005
1000	MONSTER S	2005	
1000	MONSTER S2R	2006	2007
1000	MONSTER S4R	2005	2006
1000	MULTISTRADA	2003	2006
1000	MULTISTRADA DS / S DS	2005	
1000	MULTISTRADA S	2006	
1000	PAUL SMART L.E.	2006	
1000	SPORT	2007	2009
1000	SPORT S	2007	2009
1000	ST3	2005	2007
1000	ST3 S	2006	2007
1000	SUPERSPORT	2003	
	MOTO GUZZI		
850	BREVA	2006	2007
850	GRISO	2006	2007
850	NORGE	2007	2017
940	AQUILA NERA	2007	2017
940	BELLAGIO	2007	2017
1100	BREVA	2005	2007
1100	GRISO	2005	2008
1200	BREVA	2008	2017
1200	GRISO 8V	2007	2017
1200	GRISO 8V SPECIAL ED.	2007	2017
1200	NORGE	2006	2009
1200	NORGE GT8V	2010	2017
1200	SPORT	2006	2008
1200	SPORT 4V ABS	2009	2017
1200	STELVIO	2008	
1200	STELVIO NTX ABS	2009	2017
	MOTO MORINI		
1200	9,5	2007	2017
1200	CORSARO	2005	2006
1200	CORSARO CARBON	2007	2017
1200	CORSARO SPORT	2008	2017
1200	SCRAMBLER	2009	2017

LV009 - APPLICAZIONI / application list

CC	MODELLO Model	ANNI / years DA / from	A / to
	APRILIA		
250	RS	1998	2003
1000	RSV	1998	2003
1000	RSV MILLE	2001	
1000	RSV SP	1999	
1000	SL FALCO	2000	2003
1000	TUONO	2002	2005
1000	TUONO FACTORY	2006	2010
1000	TUONO R	2006	2009
1001	TUONO V4 R	2011	2017
1200	DORSODURO	2011	2017
	BENELLI		
899	CAFE' RACER	2010	
900	TORNADO LE	2002	2003
900	TORNADO RS	2004	2005
900	TORNADO TRE	2003	
1130	TNT CAFE RACER	2006	2007
1130	TNT CAFE RACER	2010	2017
1130	TORNADO TRE	2007	
	DUCATI		
748	748	1999	2002
748	748 R	1999	2002
748	748 S	2000	2002
750	SUPERSPORT	1999	2002
900	MONSTER IE	2000	2001
900	SPORT 900	2002	
900	SUPERSPORT	1998	1999
900	SUPERSPORT IE	2000	2002
916	MONSTER S4	2001	2002
996	996	1999	2001
996	996 R	2001	
996	996 S	2001	
996	SPECIAL USA	1999	
996	SPS	1999	2000
998	998	2002	
998	MATRIX	2004	
998	998 R	2002	
998	998 S BAYLISS	2002	
999	S FINAL EDITION	2004	
1000	GT	2006	2010
1000	GT TOURING	2009	
1000	MONSTER	2003	2005
1000	MONSTER S	2005	
1000	MONSTER S2R	2006	2007
1000	MONSTER S4R	2005	2006
1000	MULTISTRADA	2003	2006
1000	MULTISTRADA DS / S DS	2005	
1000	MULTISTRADA S	2006	
1000	PAUL SMART	2006	
1000	SPORT	2007	2009
1000	SPORT S	2007	2009
1000	ST3	2005	2007
1000	ST3 S	2006	2007
1000	SUPERSPORT	2003	
	HUSQVARNA		
250	SMR	2006	2013
310	SMR	2009	2013
450	SMR	2006	2016
510	SMR	2006	2008
630	SMS	2010	2013

Racing

ACCOSSATO

LEVE: RICAMBIO POMPE FRENO/FRIZIONE OEM
levers: spare parts for oem brake/clutch master cylinders



CODICE Reference	DESCRIZIONE Description	APPLICAZIONI / Application list			COLORI Colours	OPZIONI Options
			CC			
LV010	LEVA FRIZIONE REGOLABILE SNODATA CON GRANO, PER POMPA / COMANDO FRIZIONE; LEVA LUNGA: 17 cm adjustable, folding clutch lever with pin for clutch master cylinder / clutch control; long lever: 17 cm	DUCATI	696	MONSTER 2010 - 2013	N NERO / black O ARANCIONE / orange Y ORO / gold B BLU / blue R ROSSO / red S ARGENTO / silver G VERDE / green	RST
			796	HYPERMOTARD 2009 - 2017		
			796	MONSTER 2010 - 2017		
LV011	LEVA FRENO REGOLABILE SNODATA CON GRANO, PER POMPA FRENO; LEVA LUNGA: 17 cm adjustable, folding brake lever with pin for brake master cylinder long lever: 17 cm	DUCATI	696	MONSTER 2010 - 2013		
			796	HYPERMOTARD 2009 - 2017		
			796	MONSTER 2010 - 2017		
		GILERA	800	GP800 2008 - 2009		
		KTM	690	DUKE 2011 - 2017		
			690	DUKE ABS 2011 - 2017		
			690	SM 2007 - 2015		
			690	SMC R 2010 - 2015		

SPIEGAZIONE	Explanation
LEVA SNODATA ANTI-ROTTURA, REALIZZATA IN ALLUMINIO E BREVETTATA ACCOSSATO. IN CASO DI CADUTA, LO SNODO CONSENTE DI POTER RIPRENDERE LA CORSA, CON UN SEMPLICE GESTO DELLA MANO.	Anti-breaking patented Accossato lever, in aluminium raw material. In the event of fall, its junction allows you to retake the race by a simple hand movement, with no need to brake.

ACCOSSATO

Racing

LEVE: RICAMBIO PER POMPE ORIGINALI
levers: spare parts for oem master cylinders



CODICE Reference	**DESCRIZIONE** Description	**COLORI** Colours	**OPZIONI** Options
LV012	**LEVA FRENO SNODATA, PER POMPE OEM** folding brake lever, for oem master cylinder	**N** **NERO** / black **O** **ARANCIONE** / orange **Y** **ORO** / gold **B** **BLU** / blue **R** **ROSSO** / red **S** **ARGENTO** / silver **G** **VERDE** / green	**RST**
LV013			
LV014	**LEVA FRIZIONE SNODATA, PER POMPE OEM** folding clutch lever, for oem master cylinder		
LV015			

TUTTE LE LEVE HANNO LUNGHEZZA STANDARD / all standard-length levers

Racing

ACCOSSATO

LEVE PER POMPE ORIGINALI / levers for oem master cylinders

LV012 - APPLICAZIONI / application list

CC	MODELLO Model	ANNI / years	
		DA / from	A / to
	APRILIA		
1000	RSV R	2004	2008
1000	RSV R Dream	2004	2008
1000	RSV R Factory	2004	2008
1000	RSV4	2009	2017
1000	RSV4 Factory	2009	2017
1000	RSV4 R	2010	2017
	BENELLI		
1130	TnT R160	2010	2012
	DUCATI		
749	749	2003	2006
749	749 DARK	2004	2006
749	749 R	2004	2006
749	749 S	2003	2006
848	848	2008	2017
848	854 EVO	2012	2017
999	999	2003	2006
999	999 R	2003	2006
999	999 S	2003	2006
1000	MONSTER S4R	2007	2008
1000	MONSTER S4Rs	2006	2008
1100	MONSTER	2009	2013
1100	MONSTER EVO	2011	2017
1100	MONSTER S	2009	2013
	KTM		
990	SUPER DUKE	2005	2015
990	SUPER DUKE R	2007	2017
1190	RC8	2008	2015
1190	RC8 R	2009	2014
	MOTO GUZZI		
1225	MGS-01 Corsa	2004	2014
	MOTO MORINI		
1200	CORSARO	2007	2017
1200	CORSARO CARBON	2007	2017
1200	CORSARO VELOCE	2007	2017
1200	GRANPASSO	2008	2017
	TRIUMPH		
675	DAYTONA R	2011	2013
1050	SPEED TRIPLE	2010	2015

LV013 - APPLICAZIONI / application list

CC	MODELLO Model	ANNI / years	
		DA / from	A / to
	DUCATI		
1200	SUPERBIKE PANIGALE R	2016	2016
1199	SUPERBIKE PANIGALE R	2017	2017
1198	SUPERBIKE PANIGALE R	2015	2015
1200	SUPERBIKE PANIGALE R USA	2016	2016
1199	SUPERBIKE PANIGALE R USA	2017	2017
1198	SUPERBIKE PANIGALE R USA	2015	2015
959	SUPERBIKE 959 PANIGALE ABS USA	2017	2017
955	SUPERBIKE 959 PANIGALE ABS USA	2016	2016
955	SUPERBIKE 959 PANIGALE ABS THA	2016	2016
956	SUPERBIKE 959 PANIGALE ABS BRA	2017	2017
956	SUPERBIKE 959 PANIGALE ABS	2017	2017
955	SUPERBIKE 959 PANIGALE ABS	2016	2016
1198	SUPERBIKE 899 PANIGALE ABS	2015	2015
898	SUPERBIKE 899 PANIGALE ABS USA	2015	2015
898	SUPERBIKE 899 PANIGALE ABS USA	2014	2014
898	SUPERBIKE 899 PANIGALE ABS THA	2015	2015
899	SUPERBIKE 899 PANIGALE ABS	2014	2014
1300	SUPERBIKE 1299S ABS	2016	2016
1299	SUPERBIKE 1299S ABS	2017	2017
1285	SUPERBIKE 1299S ABS	2015	2015
1300	SUPERBIKE 1299S ABS USA	2016	2016
1299	SUPERBIKE 1299S ABS USA	2017	2017
1285	SUPERBIKE 1299S ABS USA	2015	2015
1299	SUPERBIKE 1299S ABS BRASIL	2016	2016
1299	SUPERBIKE 1299S 90 ANNIVERSARIO	2017	2017
1300	SUPERBIKE 1299 ABS	2016	2016
1299	SUPERBIKE 1299 ABS	2017	2017
1285	SUPERBIKE 1299 ABS	2015	2015
1300	SUPERBIKE 1299 ABS USA	2016	2016
1299	SUPERBIKE 1299 ABS USA	2017	2017
1285	SUPERBIKE 1299 ABS USA	2015	2015
1299	SUPERBIKE 1299 ABS BRASIL	2016	2016
1200	SUPERBIKE 1199 PANIGALE	2013	2013
1200	SUPERBIKE 1199 PANIGALE	2012	2012
1200	SUPERBIKE 1199 PANIGALE USA	2013	2013
1200	SUPERBIKE 1199 PANIGALE USA	2012	2012
1200	SUPERBIKE 1199 PANIGALE S	2013	2013
1200	SUPERBIKE 1199 PANIGALE S	2012	2012
1200	SUPERBIKE 1199 PANIGALE S USA	2013	2013
1200	SUPERBIKE 1199 PANIGALE S USA	2012	2012
1200	SUPERBIKE 1199 PANIGALE S TRIC	2013	2013
1200	SUPERBIKE 1199 PANIGALE S TRIC	2012	2012
1200	SUPERBIKE 1199 PANIGALE S ABS	2014	2014
1200	SUPERBIKE 1199 PANIGALE S ABS	2013	2013
1200	SUPERBIKE 1199 PANIGALE S ABS	2012	2012
1199	SUPERBIKE 1199 PANIGALE S ABS	2015	2015
1198	SUPERBIKE 1199 PANIGALE S ABS	2014	2014
1200	SUPERBIKE 1199 PANIGALE R	2014	2014
1199	SUPERBIKE 1199 PANIGALE R	2013	2013
1200	SUPERBIKE 1199 PANIGALE R USA	2014	2014
1199	SUPERBIKE 1199 PANIGALE R USA	2013	2013
1200	SUPERBIKE 1199 PANIGALE ABS	2014	2014
1200	SUPERBIKE 1199 PANIGALE ABS	2013	2013
1200	SUPERBIKE 1199 PANIGALE ABS	2012	2012
1200	SUPERBIKE 1199 PANIGALE ABS US	2014	2014
1200	SUPERBIKE 1199 PANIGALE ABS US	2013	2013
1200	SUPERBIKE 1199 PANIGALE ABS US	2012	2012
1199	SUPERBIKE 1199 PANIGALE ABS BR	2015	2015
1198	SUPERBIKE 1199 PANIGALE ABS BR	2014	2014
1200	MONSTER 1200 S	2017	2017
1200	MONSTER 1200 S	2016	2016
1200	MONSTER 1200 S	2015	2015
1200	MONSTER 1200 S	2014	2014
1200	MONSTER 1200 S USA	2017	2017
1200	MONSTER 1200 S USA	2016	2016
1200	MONSTER 1200 S USA	2015	2015
1200	MONSTER 1200 S USA	2014	2014
1200	MONSTER 1200 S STRIPES	2016	2016
1200	MONSTER 1200 S STRIPES	2015	2015
1200	MONSTER 1200 S STRIPES USA	2016	2016
1200	MONSTER 1200 S STRIPES USA	2015	2015
1200	MONSTER 1200 R	2017	2017
1200	MONSTER 1200 R	2016	2016
1200	MONSTER 1200 R USA	2017	2017
1200	MONSTER 1200 R USA	2016	2016

LEVE PER POMPE ORIGINALI / levers for oem master cylinders

LV014 - APPLICAZIONI / application list

CC	MODELLO Model	ANNI / years	
		DA / from	A / to
	APRILIA		
1000	RSV R	2004	2008
1000	RSV R Dream	2004	2008
1000	RSV R Factory	2004	2008
1000	RSV4	2009	2017
	BENELLI		
1130	TnT R160	2010	2012
	DUCATI		
749	749	2003	2006
749	749 DARK	2004	2006
749	749 R	2004	2006
749	749 S	2003	2006
848	848	2008	2017
848	854 EVO	2012	2017
999	999	2003	2006
999	999 R	2003	2006
999	999 S	2003	2006
1000	MONSTER S4R	2007	2008
1000	MONSTER S4Rs	2006	2008
1100	MONSTER	2009	2013
1100	MONSTER EVO	2011	2017
1100	MONSTER S	2009	2013
	MOTO GUZZI		
1225	MGS-01 Corsa	2004	2014
	MOTO MORINI		
1200	CORSARO	2007	2017
1200	CORSARO VELOCE	2007	2017
1200	GRANPASSO	2008	2017

LV015 - APPLICAZIONI / application list

CC	MODELLO Model	ANNI / years	
		DA / from	A / to
	DUCATI		
1200	SUPERBIKE PANIGALE R	2016	2016
1199	SUPERBIKE PANIGALE R	2017	2017
1198	SUPERBIKE PANIGALE R	2015	2015
1200	SUPERBIKE PANIGALE R USA	2016	2016
1199	SUPERBIKE PANIGALE R USA	2017	2017
1198	SUPERBIKE PANIGALE R USA	2015	2015
959	SUPERBIKE 959 PANIGALE ABS USA	2017	2017
955	SUPERBIKE 959 PANIGALE ABS USA	2016	2016
955	SUPERBIKE 959 PANIGALE ABS THA	2016	2016
956	SUPERBIKE 959 PANIGALE ABS BRA	2017	2017
956	SUPERBIKE 959 PANIGALE ABS	2017	2017
955	SUPERBIKE 959 PANIGALE ABS	2016	2016
1198	SUPERBIKE 899 PANIGALE ABS	2015	2015
898	SUPERBIKE 899 PANIGALE ABS USA	2015	2015
898	SUPERBIKE 899 PANIGALE ABS USA	2014	2014
898	SUPERBIKE 899 PANIGALE ABS THA	2015	2015
899	SUPERBIKE 899 PANIGALE ABS	2014	2014
1300	SUPERBIKE 1299S ABS	2016	2016
1299	SUPERBIKE 1299S ABS	2017	2017
1285	SUPERBIKE 1299S ABS	2015	2015
1300	SUPERBIKE 1299S ABS USA	2016	2016
1299	SUPERBIKE 1299S ABS USA	2017	2017
1285	SUPERBIKE 1299S ABS USA	2015	2015
1299	SUPERBIKE 1299S ABS BRASIL	2016	2016
1299	SUPERBIKE 1299S 90 ANNIVERSARIO	2017	2017
1300	SUPERBIKE 1299 ABS	2016	2016
1299	SUPERBIKE 1299 ABS	2017	2017
1285	SUPERBIKE 1299 ABS	2015	2015
1300	SUPERBIKE 1299 ABS USA	2016	2016
1299	SUPERBIKE 1299 ABS USA	2017	2017
1285	SUPERBIKE 1299 ABS USA	2015	2015
1299	SUPERBIKE 1299 ABS BRASIL	2016	2016
1200	SUPERBIKE 1199 PANIGALE	2013	2013
1200	SUPERBIKE 1199 PANIGALE	2012	2012
1200	SUPERBIKE 1199 PANIGALE USA	2013	2013
1200	SUPERBIKE 1199 PANIGALE USA	2012	2012
1199	SUPERBIKE 1199 PANIGALE SUPERL	2014	2014
1200	SUPERBIKE 1199 PANIGALE S	2013	2013
1200	SUPERBIKE 1199 PANIGALE S	2012	2012
1200	SUPERBIKE 1199 PANIGALE S USA	2013	2013
1200	SUPERBIKE 1199 PANIGALE S USA	2012	2012
1200	SUPERBIKE 1199 PANIGALE S TRIC	2013	2013
1200	SUPERBIKE 1199 PANIGALE S TRIC	2012	2012
1200	SUPERBIKE 1199 PANIGALE S ABS	2014	2014
1200	SUPERBIKE 1199 PANIGALE S ABS	2013	2013
1200	SUPERBIKE 1199 PANIGALE S ABS	2012	2012
1199	SUPERBIKE 1199 PANIGALE S ABS	2015	2015
1198	SUPERBIKE 1199 PANIGALE S ABS	2014	2014
1200	SUPERBIKE 1199 PANIGALE R	2014	2014
1199	SUPERBIKE 1199 PANIGALE R	2013	2013
1200	SUPERBIKE 1199 PANIGALE R USA	2014	2014
1199	SUPERBIKE 1199 PANIGALE R USA	2013	2013
1200	SUPERBIKE 1199 PANIGALE ABS	2014	2014
1200	SUPERBIKE 1199 PANIGALE ABS	2013	2013
1200	SUPERBIKE 1199 PANIGALE ABS	2012	2012
1200	SUPERBIKE 1199 PANIGALE ABS US	2014	2014
1200	SUPERBIKE 1199 PANIGALE ABS US	2013	2013
1200	SUPERBIKE 1199 PANIGALE ABS US	2012	2012
1199	SUPERBIKE 1199 PANIGALE ABS BR	2015	2015
1198	SUPERBIKE 1199 PANIGALE ABS BR	2014	2014
1200	MONSTER 1200	2017	2017
1200	MONSTER 1200 USA	2017	2017
1200	MONSTER 1200 S	2017	2017
1200	MONSTER 1200 S	2016	2016
1200	MONSTER 1200 S	2015	2015
1200	MONSTER 1200 S	2014	2014
1200	MONSTER 1200 S USA	2017	2017
1200	MONSTER 1200 S USA	2016	2016
1200	MONSTER 1200 S USA	2015	2015
1200	MONSTER 1200 S USA	2014	2014
1200	MONSTER 1200 S STRIPES	2016	2016
1200	MONSTER 1200 S STRIPES	2015	2015
1200	MONSTER 1200 S STRIPES USA	2016	2016
1200	MONSTER 1200 S STRIPES USA	2015	2015
1200	MONSTER 1200 R	2017	2017
1200	MONSTER 1200 R	2016	2016
1200	MONSTER 1200 R USA	2017	2017
1200	MONSTER 1200 R USA	2016	2016

Racing

ACCOSSATO

LEVE: RICAMBI PER POMPE RADIALI NISSIN
levers: spare parts for nissin master cylinders



CODICE Reference	DESCRIZIONE Description	COLORI Colours	OPZIONI Options
LV018	LEVA FRENO SNODATA, PER POMPE RADIALI NISSIN folding brake lever, for Nissin radial master cylinders	N NERO / black O ARANCIONE / orange Y ORO / gold B BLU / blue R ROSSO / red S ARGENTO / silver G VERDE / green T TITANIO / titanium	RST
LV019			
LV020			
LV021	LEVA FRENO SNODATA CON REGISTRO INTEGRATO, PER POMPE RADIALI NISSIN folding brake lever with integrated adjuster, for Nissin radial master cylinders		
LV022			

TUTTE LE LEVE HANNO LUNGHEZZA STANDARD / all standard-length levers

LV018 + LV021 APPLICAZIONI / application list

CC	MODELLO Model	ANNI / years	
		DA / from	A / to
KAWASAKI			
750	Z750R	2011	2012
1000	Z1000	2007	2012
1000	Z1000 ABS	2007	2009

LV019 APPLICAZIONI / application list

CC	MODELLO Model	ANNI / years	
		DA / from	A / to
HONDA			
600	CBR RR	2007	2015
1000	CB1000 R	2008	2013
1000	CBR RR FIREBLADE	2004	2011
1000	CBR RR FIREBLADE ABS	2009	2012

LV020 + LV022 APPLICAZIONI / application list

CC	MODELLO Model	ANNI / years	
		DA / from	A / to
BMW			
1000	HP4	2012	2014
1000	S1000 RR	2009	2014
SUZUKI			
600	GSX-R	2004	2007
750	GSX-R	2001	2007
1000	GSX-R	2005	2017

CC	MODELLO Model	ANNI / years	
		DA / from	A / to
1300	GSX B-KING	2008	2017
TRIUMPH			
675	DAYTONA	2006	2013
675	STREET TRIPLE	2012	2015
1050	SPEED TRIPLE	2008	2009
YAMAHA			
1000	YZF-R1	2015	2016

SEMI-MANUBRIO REGOLABILE / adjustable clip-on



CODICE Reference	DESCRIZIONE Description	PER FORCELLE Ø Fits forks Ø	COLORI TUBI Rods colours	NOTE Notes
CP001	SEMI-MANUBRIO REGOLABILE CON INCLINAZIONE DA 6° A 10°, CON GUSCIO adjustable clip-on with inclination from 6° to 10°, with inner ring	48 mm 50 mm 51 mm 52 mm 53 mm 55 mm	N NERO / black O ARANCIONE / orange Y ORO / gold B BLU / blue R ROSSO / red S ARGENTO / silver G VERDE / green	COLORE GUSCI: NERO inner rings color: black
CP002	SEMI-MANUBRIO REGOLABILE CON INCLINAZIONE DA 6° A 10°, SENZA GUSCIO adjustable clip-on with inclination from 6° to 10°, no inner rings	48 mm 50 mm 51 mm 52 mm 53 mm 55 mm		

RICAMBI SEMI-MANUBRI / clip-on spare parts

CODICE Reference	DESCRIZIONE Description	PER FORCELLE Ø Fits forks Ø	COLORE GUSCIO Inner ring colour
GU048 GU050 GU051 GU052 GU053 GU055	COPPIA DI GUSCI PER SEMI-MANUBRI A DIAMETRO INTERCAMBIABILE pair of inner rings for clip-on with adjustable diameter	48 mm 50 mm 51 mm 52 mm 53 mm 55 mm	N NERO / black



CP001 - CP002 - APPLICAZIONI / application list

CC	MODELLO Model	ANNI / years DA / from	A / to	Ø FORCELLA Fork Ø
	APRILIA			
250	RS REPLICA	1995	1997	50
250	RS REPLICA	1998	2003	50
1000	RSV ME	1998	2000	53
1000	RSV RP	2001	2003	53
1000	RSV/FACTORY	2006	2009	50
1000	RSV4/FACTORY/APRC	2009	2012	50
1000	RSV R RP / ME	2001	2003	51
1000	RSV RR	2004		51
1000	SL FALCO PA	2000	2005	51
1000	RSV R FACTORY RR	2004	2010	51
1000	RSV4 FACTORY RK	2010	2012	51
1000	RSV4 FACTORY APRC RK	2011	2014	51
1000	RSV4 R RK	2010		51
1000	RSV4 R APRC RK	2011	→	51
1000	RSV4 RF APRC	2015	→	51
1000	RSV4 RR	2015	→	51
1000	RSV	1998	2003	53
1000	RSV R	1998	2009	53
1000	TUONO	1999	2008	53
	BMW			
1000	S RR	2009	2016	55
1000	HP4	2013		55
1000	HP RR K10	2013	→	55
1000	RR K10	2009	→	55
1000	S RR K10	2009	→	55
	DUCATI			
600	MONSTER	1994		50

Racing

ACCOSSATO

SEMI-MANUBRIO REGOLABILE / adjustable clip-on

CC	MODELLO Model	ANNI / years DA / from	A / to	Ø FORCELLA Fork Ø
620	MONSTER	2002		50
620	MONSTER S	2002		50
620	SUPERSPORT I.E.	2003		50
750	SS SC	1991	1998	50
750	SS S	1993	1994	50
750	SUPERSPORT SS	1994		50
750	MONSTER	1997	2002	50
750	SUPERSPORT I.E.	1999	2002	50
800	MONSTER S2R	1993		50
800	SUPERSPORT I.E.	2003	2005	50
888	888 S	1993	1996	50
900	SS S	1991	1998	50
900	MONSTER	1993	2002	50
900	SUPERSPORT SS	1993		50
900	SUPERSPORT I.E.	1998	2002	50
996	MONSTER S4R	2003		50
1000	SUPERSPORT I.E.	2003	2006	50
748	748	1994		53
748	748 SP	1995	2002	53
748	748 S, SP, SPS	1995	2000	53
748	H3	2000	2003	53
749	R S	2002		53
749	749 S	2003	2006	53
749	R,S H5	2003	2007	53
749	749R	2004	2006	53
848	S H6	2007		53
848	EVO H6	2008	2011	53
916	916	1994	1998	53
916	916 SPS	1997	1998	53
996	SPS H1	1997	2001	53
998	H2	2001	→	53
998	S H2	2001	2004	53
999	999, S,R,BIPOSTO	2002	2006	53
1000	RR FIREBLAD SP	2014	→	53
1098	1098, R, S H7	2007	2009	53
1198	1198, S, SP, R	2009	2011	53
1198	DIAVEL	2012		53
1199	PANIGALE	2012		53
1199	PANIGALE R	2013	→	53
	HONDA			
600	CBR RR	2005	2016	48
600	CBR RR ABS	2009	2010	48
600	CBR RR	2013		48
900	CBR RR SC44	2000	2001	50
900	CBR RR Fireblade	2000	2003	50
900	CBR RR	2002		50
900	CBR RR SC 50	2002	2003	50
1000	VTR SP1	2000	2006	50
1000	VTR SP1 SC45	2000	2001	50
1000	VTR SP2	2002	2007	50
1000	VTR F	2000	2006	50
1000	TR SP2 SC45	2002		50
1000	CBR FIREBLADE SC57	2004	2007	50
1000	CBR RR	2004	2016	50
1000	CBR RR SC59	2008		50
	KAWASAKI			
1000	ZX-10R NINJA	2006	2007	48
400	ZXR R	1991	2001	50
400	ZXR	1991	2003	50
600	ZX-6R Ninja	2003	2008	50
600	ZX-6RR Ninja	2003	2006	50
636	ZX-6R Ninja	2003	2006	50
1000	ZX-10R	2004	2016	50

CC	MODELLO Model	ANNI / years DA / from	A / to	Ø FORCELLA Fork Ø
600	ZX6R	2009	2013	51
750	ZXR ZX750/L/M	1992	1995	52
750	ZX-7R NINJA ZX750 P	1995	2002	52
750	ZX-7R	1996	2003	52
900	ZX 9R NINJA ZX900B	1994	1997	52
900	ZX-9R	1996		52
	MV AGUSTA			
675	F3	2015	2017	50
800	F3	2014	→	50
	SUZUKI			
250	RVG	1991	1992	50
250	RVG VJ22B	1991		50
600	FZ6	1997		50
600	GSXR	2004	2016	50
600	GSXR WVB2	2004	2005	50
600	GSXR WVCE	2006	2007	50
600	GSXR WVCV	2008	2010	50
600	GSX-R	2011	→	50
750	GSXR GR7AB	1990	1991	50
750	GSXR W GR7BB	1992	1995	50
750	GSX-R	1997	1999	50
750	GSXR W GR7DB	1998	1999	50
750	GSXR	2000	2016	50
750	GSXR WVCB	2000	2003	50
750	GSXR WV34	2004	2005	50
750	GSXR WVCF	2006	2007	50
750	GSXR WVCW	2008	2010	50
750	C4	2011	→	50
1000	TL AG	1997		50
1000	TL	1997	2003	50
1000	TL R/S	1997	2001	50
1000	TL S	1997	2001	50
1000	TL R AM	1998		50
1000	TL R	1998	2002	50
1000	GSXR	2001	2016	50
1000	GSXR WVBL	2001	2002	50
1000	GSXR WVBZ	2003	2004	50
1000	SV, S, N	2003	2008	50
1000	GSXR WVB6	2005	2006	50
1000	GSXR WVCL	2007	2008	50
1000	GSXR WVCY	2009	→	50
1100	GSXR WUGU75C	1993	1997	50
1300	R HAYABUSA	2005	2007	50
1300	R HAYABUSA	2008	2012	50
1100	GSXR GV73C	1990	1992	52
1100	GSXR W GU75C	1993	1997	52
	TRIUMPH			
675	DAYTONA D 67 LC	2006	2012	50
675	DAYTONA R	2006	2012	50
675	DAYTONA H67	2013	→	50
	YAMAHA			
600	R6	2005	2016	50
600	YZF R6	2005	2010	50
750	YZF R	1993	1996	50
750	YZF R SP	1993	1998	50
750	YZF R 4HN	1993	1996	50
750	YZF SP 4HT	1995	1996	50
750	YZF R7	1999	2002	50
1000	FZR UP SIDE D. 3LE	1991	1995	50
1000	THUNDERACE	1996	2002	48
1000	R1	1998	2016	50
1000	YZF-R1	1998	2010	50
1000	FZR	1998	2009	50

ACCOSSATO

Racing

SEMI-MANUBRI / clip-on



INCLINAZIONE 10°
INCLINATION 10°

CODICE Reference	DESCRIZIONE Description	PER FORCELLE Ø Fits forks Ø	COLORI TUBI Rods colours	COLORI BRACCIALETTO Rings colours
CP003	**SEMI-MANUBRIO IN ALLUMINIO FORGIATO CON MORSETTO DI BLOCCAGGIO COMPOSTO DA 2 SEMI-GUSCI** aluminium-forged clip-on provided with metal clamp composed of 2 half-rings	**50 mm** **51 mm** **52 mm** **53 mm**	**N** **NERO** / black **O** **ARANCIONE** / orange **Y** **ORO** / gold **B** **BLU** / blue **R** **ROSSO** / red **S** **ARGENTO** / silver **G** **VERDE** / green	**N** **NERO** / black **S** **ARGENTO** / silver

APPLICAZIONI / application list

CC	MODELLO Model	ANNI / years DA / from	A / to	Ø FORCELLA Fork Ø
	APRILIA			
250	RS REPLICA	1995	1997	50
250	RS REPLICA	1998	2003	50
1000	RSV ME	1998	2000	53
1000	RSV RP	2001	2003	53
1000	RSV/FACTORY	2006	2009	50
1000	RSV4/FACTORY/APRC	2009	2012	50
1000	RSV R RP / ME	2001	2003	51
1000	RSV RR	2004		51
1000	SL FALCO PA	2000	2005	51
1000	RSV R FACTORY RR	2004	2010	51
1000	RSV4 FACTORY RK	2010	2012	51
1000	RSV4 FACTORY APRC RK	2011	2014	51
1000	RSV4 R RK	2010		51
1000	RSV4 R APRC RK	2011	→	51
1000	RSV4 RF APRC	2015	→	51
1000	RSV4 RR	2015	→	51
1000	RSV	1998	2003	53

CC	MODELLO Model	ANNI / years DA / from	A / to	Ø FORCELLA Fork Ø
1000	RSV R	1998	2009	53
1000	TUONO	1999	2008	53
	DUCATI			
600	MONSTER	1994		50
620	MONSTER	2002		50
620	MONSTER S	2002		50
620	SUPERSPORT I.E.	2003		50
750	SS SC	1991	1998	50
750	SS S	1993	1994	50
750	SUPERSPORT SS	1994		50
750	MONSTER	1997	2002	50
750	SUPERSPORT I.E.	1999	2002	50
800	MONSTER S2R	1993		50
800	SUPERSPORT I.E.	2003	2005	50
888	888 S	1993	1996	50
900	SS S	1991	1998	50
900	MONSTER	1993	2002	50
900	SUPERSPORT SS	1993		50

Racing

ACCOSSATO

SEMI-MANUBRI / clip-on

CC	MODELLO Model	ANNI / years DA / from	A / to	Ø FORCELLA Fork Ø
900	SUPERSPORT I.E.	1998	2002	50
996	MONSTER S4R	2003		50
1000	SUPERSPORT I.E.	2003	2006	50
748	748	1994		53
748	748 SP	1995	2002	53
748	748 S, SP, SPS	1995	2000	53
748	H3	2000	2003	53
749	R S	2002		53
749	749 S	2003	2006	53
749	R,S H5	2003	2007	53
749	749R	2004	2006	53
848	S H6	2007		53
848	EVO H6	2008	2011	53
916	916	1994	1998	53
916	916 SPS	1997	1998	53
996	SPS H1	1997	2001	53
998	H2	2001	→	53
998	S H2	2001	2004	53
999	999, S,R,BIPOSTO	2002	2006	53
1000	RR FIREBLAD SP	2014	→	53
1098	1098, R, S H7	2007	2009	53
1198	1198, S, SP, R	2009	2011	53
1198	DIAVEL	2012		53
1199	PANIGALE	2012		53
1199	PANIGALE R	2013	→	53
	HONDA			
900	CBR RR SC44	2000	2001	50
900	CBR RR Fireblade	2000	2003	50
900	CBR RR	2002		50
900	CBR RR SC 50	2002	2003	50
1000	VTR SP1	2000	2006	50
1000	VTR SP1 SC45	2000	2001	50
1000	VTR SP2	2002	2007	50
1000	VTR F	2000	2006	50
1000	TR SP2 SC45	2002		50
1000	CBR FIREBLADE SC57	2004	2007	50
1000	CBR RR	2004	2016	50
1000	CBR RR SC59	2008		50
	KAWASAKI			
400	ZXR R	1991	2001	50
400	ZXR	1991	2003	50
600	ZX-6R Ninja	2003	2008	50
600	ZX-6RR Ninja	2003	2006	50
636	ZX-6R Ninja	2003	2006	50
1000	ZX-10R	2004	2016	50
600	ZX6R	2009	2013	51
750	ZXR ZX750/L/M	1992	1995	52
750	ZX-7R NINJA ZX750 P	1995	2002	52
750	ZX-7R	1996	2003	52
900	ZX 9R NINJA ZX900B	1994	1997	52
900	ZX-9R	1996		52
	MV AGUSTA			
675	F3	2015	2017	50
800	F3	2014	→	50

CC	MODELLO Model	ANNI / years DA / from	A / to	Ø FORCELLA Fork Ø
	SUZUKI			
250	RVG	1991	1992	50
250	RVG VJ22B	1991		50
600	FZ6	1997		50
600	GSXR	2004	2016	50
600	GSXR WVB2	2004	2005	50
600	GSXR WVCE	2006	2007	50
600	GSXR WVCV	2008	2010	50
600	GSX-R	2011	→	50
750	GSXR GR7AB	1990	1991	50
750	GSXR W GR7BB	1992	1995	50
750	GSX-R	1997	1999	50
750	GSXR W GR7DB	1998	1999	50
750	GSXR	2000	2016	50
750	GSXR WVCB	2000	2003	50
750	GSXR WV34	2004	2005	50
750	GSXR WVCF	2006	2007	50
750	GSXR WVCW	2008	2010	50
750	C4	2011	→	50
1000	TL AG	1997		50
1000	TL	1997	2003	50
1000	TL R/S	1997	2001	50
1000	TL S	1997	2001	50
1000	TL R AM	1998		50
1000	TL R	1998	2002	50
1000	GSXR	2001	2016	50
1000	GSXR WVBL	2001	2002	50
1000	GSXR WVBZ	2003	2004	50
1000	SV, S, N	2003	2008	50
1000	GSXR WVB6	2005	2006	50
1000	GSXR WVCL	2007	2008	50
1000	GSXR WVCY	2009	→	50
1100	GSXR WUGU75C	1993	1997	50
1300	R HAYABUSA	2005	2007	50
1300	R HAYABUSA	2008	2012	50
1100	GSXR GV73C	1990	1992	52
1100	GSXR W GU75C	1993	1997	52
	TRIUMPH			
675	DAYTONA D 67 LC	2006	2012	50
675	DAYTONA R	2006	2012	50
675	DAYTONA H67	2013	→	50
	YAMAHA			
600	R6	2005	2016	50
600	YZF R6	2005	2010	50
750	YZF R	1993	1996	50
750	YZF R SP	1993	1998	50
750	YZF R 4HN	1993	1996	50
750	YZF SP 4HT	1995	1996	50
750	YZF R7	1999	2002	50
1000	FZR UP SIDE D. 3LE	1991	1995	50
1000	R1	1998	2016	50
1000	YZF-R1	1998	2010	50
1000	FZR	1998	2009	50

ACCOSSATO

Racing

SEMI-MANUBRI RIALZATI / raised clip-on



CODICE Reference	DESCRIZIONE Description	Ø mm	RIALZO Rise	COLORI TUBI Rods colours	COLORI BRACCIALETTO Rings colours
CP004	**SEMI-MANUBRIO RIALZATO CON INCLINAZIONE 10° REALIZZATO IN ERGAL 7075 RICAVATO CNC** raised clip-on 10° inclination made in cnc-worked ergal 7075 raw material	50	+10 mm +20 mm	**N** **NERO** / black **O** **ARANCIONE** / orange **Y** **ORO** / gold **B** **BLU** / blue **R** **ROSSO** / red **S** **ARGENTO** / silver **G** **VERDE** / green	**N** **NERO** / black **S** **ARGENTO** / silver

Racing

ACCOSSATO

SEMI-MANUBRI RIALZATI / raised clip-on

APPLICAZIONI / application list

CC	MODELLO Model	ANNI / years DA / from	A / to	Ø FORCELLA Fork Ø
APRILIA				
250	RS REPLICA	1995	1997	50
250	RS REPLICA	1998	2003	50
1000	RSV/FACTORY	2006	2009	50
1000	RSV4/FACTORY/APRC	2009	2012	50
DUCATI				
600	MONSTER	1994		50
620	MONSTER	2002		50
620	MONSTER S	2002		50
620	SUPERSPORT I.E.	2003		50
750	SS SC	1991	1998	50
750	SS S	1993	1994	50
750	SUPERSPORT SS	1994		50
750	MONSTER	1997	2002	50
750	SUPERSPORT I.E.	1999	2002	50
800	MONSTER S2R	1993		50
800	SUPERSPORT I.E.	2003	2005	50
888	888 S	1993	1996	50
900	SS S	1991	1998	50
900	MONSTER	1993	2002	50
900	SUPERSPORT SS	1993		50
900	SUPERSPORT I.E.	1998	2002	50
996	MONSTER S4R	2003		50
1000	SUPERSPORT I.E.	2003	2006	50
HONDA				
900	CBR RR SC44	2000	2001	50
900	CBR RR Fireblade	2000	2003	50
900	CBR RR	2002		50
900	CBR RR SC 50	2002	2003	50
1000	VTR SP1	2000	2006	50
1000	VTR SP1 SC45	2000	2001	50
1000	VTR SP2	2002	2007	50
1000	VTR F	2000	2006	50
1000	TR SP2 SC45	2002		50
1000	CBR FIREBLADE SC57	2004	2007	50
1000	CBR RR	2004	2016	50
1000	CBR RR SC59	2008		50
KAWASAKI				
400	ZXR R	1991	2001	50
400	ZXR	1991	2003	50
600	ZX-6R Ninja	2003	2008	50
600	ZX-6RR Ninja	2003	2006	50
636	ZX-6R Ninja	2003	2006	50
1000	ZX-10R	2004	2016	50
MV AGUSTA				
675	F3	2015	2017	50
800	F3	2014	→	50
SUZUKI				
250	RVG	1991	1992	50
250	RVG VJ22B	1991		50
600	FZ6	1997		50
600	GSXR	2004	2016	50
600	GSXR WVB2	2004	2005	50
600	GSXR WVCE	2006	2007	50
600	GSXR WVCV	2008	2010	50
600	GSX-R	2011	→	50
750	GSXR GR7AB	1990	1991	50
750	GSXR W GR7BB	1992	1995	50
750	GSX-R	1997	1999	50
750	GSXR W GR7DB	1998	1999	50
750	GSXR	2000	2016	50
750	GSXR WVCB	2000	2003	50
750	GSXR WV34	2004	2005	50
750	GSXR WVCF	2006	2007	50
750	GSXR WVCW	2008	2010	50
750	C4	2011	→	50
1000	TL AG	1997		50
1000	TL	1997	2003	50
1000	TL R/S	1997	2001	50
1000	TL S	1997	2001	50
1000	TL R AM	1998		50
1000	TL R	1998	2002	50
1000	GSXR	2001	2016	50
1000	GSXR WVBL	2001	2002	50
1000	GSXR WVBZ	2003	2004	50
1000	SV, S, N	2003	2008	50
1000	GSXR WVB6	2005	2006	50
1000	GSXR WVCL	2007	2008	50
1000	GSXR WVCY	2009	→	50
1100	GSXR WUGU75C	1993	1997	50
1300	R HAYABUSA	2005	2007	50
1300	R HAYABUSA	2008	2012	50
TRIUMPH				
675	DAYTONA D 67 LC	2006	2012	50
675	DAYTONA R	2006	2012	50
675	DAYTONA H67	2013	→	50
YAMAHA				
600	R6	2005	2016	50
600	YZF R6	2005	2010	50
750	YZF R	1993	1996	50
750	YZF R SP	1993	1998	50
750	YZF R 4HN	1993	1996	50
750	YZF SP 4HT	1995	1996	50
750	YZF R7	1999	2002	50
1000	FZR UP SIDE D. 3LE	1991	1995	50
1000	R1	1998	2016	50
1000	YZF-R1	1998	2010	50
1000	FZR	1998	2009	50

TUBI SEMI-MANUBRI / clip-on rods



CODICE Reference	DESCRIZIONE Description	MISURE Dimension		RICAMBIO PER Spare part for	COLORI TUBI Rods colours
TB001	**TUBI SEMI-MANUBRI IN ALLUMINIO REALIZZATI IN LEGA AERONAUTICA 2014 NO TAPPI TUBI** aluminium-made clip-on in 2014-aeronautic alloy no rod caps	**LUNGHEZZA** length	**280 mm**		N **NERO** / black O **ARANCIONE** / orange Y **ORO** / gold B **BLU** / blue R **ROSSO** / red S **ARGENTO** / silver G **VERDE** / green
		Ø INTERNO inner Ø	**14 mm**		
TB002	**TUBI SEMI-MANUBRI IN ALLUMINIO REALIZZATI IN LEGA 7003** aluminium-made clip-on in 7003 alloy	**LUNGHEZZA** length	**250 mm**	**CP003 + CP004**	
		Ø INTERNO inner Ø	**17 mm**		
TB003	**TUBI SEMI-MANUBRI IN ALLUMINIO REALIZZATI IN LEGA 7003** aluminium-made clip-on in 7003 alloy	**LUNGHEZZA** length	**280 mm**	**CP001 + CP002**	
		Ø INTERNO inner Ø	**17 mm**		

RICAMBI / spare parts

CODICE Reference	DESCRIZIONE Description	MISURE Dimension		RICAMBIO PER Spare part for	COLORI TAPPI Caps colours
TT001	**TAPPI TUBO SEMI-MANUBRIO** cap for clip-on rod	**Ø INTERNO** inner Ø	**17 mm**	**TB002 + TB003**	N **NERO** / black

Racing

ACCOSSATO

PROTEZIONE CORONA / sprocket defender



CODICE Reference	**DESCRIZIONE** Description	**SPECIFICHE TECNICHE** Technical details		**COLORI** Colours
SP001	**PROTEZIONE CORONA** sprocket defender	**MATERIALE** raw material	**ALLUMINIO** aluminium	**N** **NERO** / black **O** **ARANCIONE** / orange **Y** **ORO** / gold **B** **BLU** / blue **R** **ROSSO** / red **S** **ARGENTO** / silver **G** **VERDE** / green
		SPESSORE thickness	**3 mm**	

MARCA Brand	**CC**	**MODELLO** Model	**ANNI** / Years	
KAWASAKI	**600**	**ZX-6R**	**2003**	**2014**
	636	**ZX-636R**	**2003**	**2014**
	1000	**ZX-10R**	**2004**	**2014**
SUZUKI	**600**	**GSX-R**	**2004**	**2014**
	750	**GSX-R**	**2004**	**2014**
	1000	**GSX-R**	**2003**	**2008**
	1000	**GSX-R**	**2009**	**2014**

SPIEGAZIONE	Explanation
IL MONTAGGIO AVVIENE DIRETTAMENTE SUL NOTTOLINO DEL FORCELLONE, SENZA EFFETTUARE MODIFICHE.	Direct assebly on swing arm; no modifications are required.

ACCOSSATO

Racing

MANOPOLE RACING / racing grips



CODICE Reference	DESCRIZIONE Description	Ø	OPZIONI Options	COLORI Colours
GR001	**MANOPOLE RACING *** **REALIZZATE IN MESCOLA SEMI-RIGIDA** **INTERCAMBIABILI A TUTTE LE MOTO STRADALI** racing grips made in semi-rigid compound suitable for any street motorcycles	22 / 24	**FORATE** pierced **NON FORATE** not pierced	**N** **NERO** / black **O** **ARANCIONE** / orange **Y** **ORO** / gold **B** **BLU** / blue **R** **ROSSO** / red **S** **ARGENTO** / silver **G** **VERDE** / green



CODICE Reference	DESCRIZIONE Description	Ø	OPZIONI Options	COLORI Colours
GR002	**MANOPOLE RACING *** **INTERCAMBIABILI A TUTTE LE MOTO RACING** racing grips suitable for any racing motorcycles	22 / 24	**FORATE** pierced **NON FORATE** not pierced	**MANOPOLE** / grips: **N** **NERO** / black **LOGO:** **R** **ROSSO** / red

*** MANOPOLE VENDUTE A COPPIE** / grips sold in pairs


SUPERSPOR
FIM WORLD CHA
PIRELLI
1ST
Kawasaki
SHOEI

ACCOSSATO

STREET RACING



INDICE LINEA STREET RACING
street racing line index

POMPE RADIALI / radial master cylinders: **82 - 89**

LEVE CNC / cnc worked levers: **90 - 93**

POMPE FRENO CUSTOM / Custom brake master cylinders: **94**

MANOPOLE ALLUMINIO CNC / cnc worked aluminium grips: **95**

MANOPOLE RISCALDARE / warming-up grips: **96**

SEMI-MANUBRI / clip on: **97**

KIT FLANGE FRENO / brake flange kit: **98 - 99**

CAVALLETTI / stands: **100 - 101**

PEDANE / rearsets: **102 - 105**

SERBATOIO LIQUIDO FRENI CNC / cnc worked fluid reservoirs: **106 - 107**

TAPPI e COPERCHI / caps & covers: **108 - 115**

TAMPONI PARACARENA / crash pads: **116 - 117**

TAPPI SPECCHIO / mirror cover: **118**

GHIERE / steering nuts: **119 - 120**

PROTEZIONE FORCELLA / fork protector: **122 - 123**

SUPPORTI CAVALLETTO / stand supports: **124**

LED FENDINEBBIA / led fog lights: **125**

SPECCHIETTI RETROVISORI / rear view mirrors: **126 - 128**

CATADIOTTRO / retroflector: **128**

SEZIONE MANUBRI / hanldlebar section: **129 - 195**


JEREZ
proskins
DAINESE
Arai
CAROLE NASH
The care it deserves
B&C
express
Pair
OXFORD
Donington
Speedfit
Kawasaki
679
Bournemouth Kawasaki
Racing
Cool Milk
www.leonhaslam.com

STREET RACING

POMPE REVOLUTION / revolution master cylinders



POMPE REVOLUTION / revolution master cylinders

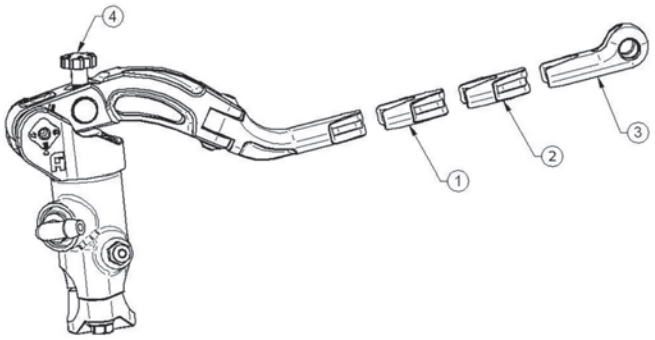

* **INSERTO 2 (2) E POMELLO DI REGOLAZIONE (4) DISPONIBILI SOLO IN NERO**
Second insert (2) and adjusting knob (4) available in black color only

** **CODINO (3): STESSO COLORE DEL PERNO DI REGOLAZIONE (4)**
Final insert (3): same colour as adjusting knob (4)

LEVA CORTA / Short lever

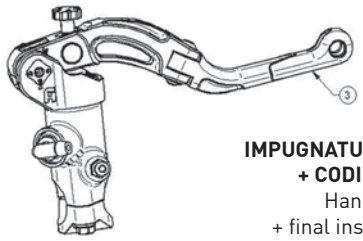

IMPUGNATURA + CODINO
Handle + final insert

LEVA MEDIA / Medium lever

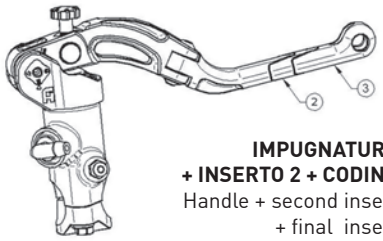

IMPUGNATURA + INSERTO 2 + CODINO
Handle + second insert + final insert

LEVA LUNGA / Long lever

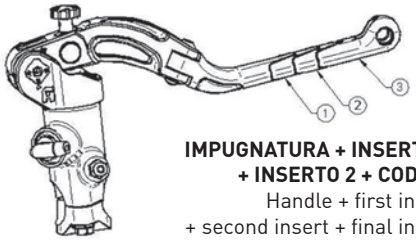

IMPUGNATURA + INSERTO 1 + INSERTO 2 + CODINO
Handle + first insert + second insert + final insert

POMPE FRENO Ø 16/ brake master cylinders Ø 16

CODICE Reference	DESCRIZIONE Description
CL055	**POMPA FRENO RADIALE 16X16 FORGIATA CON LEVA REVOLUTION** forged radial brake master cylinder 16x16 with revolution lever
CL056	**POMPA FRENO RADIALE 16X18 FORGIATA CON LEVA REVOLUTION** forged radial brake master cylinder 16x18 with revolution lever
CL051	**POMPA FRENO RADIALE PRS 16X17-18-19 FORGIATA CON LEVA REVOLUTION** forged radial PRS brake master cylinder 16x17-18-19 with revolution lever with revolution lever

CODICE Reference	DESCRIZIONE Description
CL059	**POMPA FRIZIONE RADIALE 16X16 FORGIATA CON LEVA REVOLUTION** forged radial clutch master cylinder 16x16 with revolution lever
CL058	**POMPA FRIZIONE RADIALE 16X18 FORGIATA CON LEVA REVOLUTION** forged radial clutch master cylinder 16x18 with revolution lever
CL052	**POMPA FRIZIONE RADIALE PRS 16X15-16-17 FORGIATA CON LEVA REVOLUTION** forged radial clutch master cylinder 16x15-16-17, with revolution lever

POMPE FRENO Ø 19 / brake master cylinders Ø 19

CODICE Reference	DESCRIZIONE Description
CL053	**POMPA FRENO RADIALE FORGIATA 19X18 CON LEVA REVOLUTION** forged radial brake master cylinder 19x18 with revolution lever
CL054	**POMPA FRENO RADIALE FORGIATA 19X19 CON LEVA REVOLUTION** forged radial brake master cylinder 19x19 with revolution lever

CODICE Reference	DESCRIZIONE Description
CL057	**POMPA FRENO RADIALE FORGIATA 19X20 CON LEVA REVOLUTION** forged radial brake master cylinder 19x20 with revolution lever
CL050	**POMPA FRENO RADIALE FORGIATA PRS 19X17-18-19 CONN LEVA REVOLUTION** forged radial PRS brake master cylinder 19x17-18-19 with revolution lever

INSERTI DI RICAMBIO
Spare-part insets

CODICE Reference	DESCRIZIONE Description	COLORI INSERTI E CODINO Insert and final insert colours	NOTE Notes
IN001	**INSERTO + VITI** insert + screws	N **NERO** / black O **ARANCIONE** / orange Y **ORO** / gold B **BLU** / blue R **ROSSO** / red S **ARGENTO** / silver G **VERDE** / green	* **INSERTO (2) SOLO IN NERO** second insert (2) in black color only ** **PERNO DI REGOLAZIONE E CODINO: STESSO COLORE** adjusting knob & final insert: same color
IN003	**CODINO** final insert		

NOTA: PER IMPIANTI BIDISCO SI CONSIGLIANO POMPE DIAMETRO 19; PER IMPIANTI MONODISCO SI CONSIGLIANO POMPE DIAMETRO 16
note: diameter 19 is suggested for double brake rotor-systems; diameter 16 is suggested for single brake rotor-systems

STREET RACING

POMPE FRENO RADIALI "BLACK EDITION"

"Black Edition" radial brake master cylinders



NOTA: PER IMPIANTI BIDISCO SI CONSIGLIANO POMPE DIAMETRO 19; PER IMPIANTI MONODISCO SI CONSIGLIANO POMPE DIAMETRO 16
note: diameter 19 is suggested for double brake rotor-systems; diameter 16 is suggested for single brake rotor-systems

ACCOSSATO

POMPE FRENO RADIALI "BLACK EDITION"
"Black Edition" radial brake master cylinders

POMPE FRENO Ø 16 / brake master cylinders Ø 16

CODICE Reference	DESCRIZIONE Description	COLORI LEVE Levers colours	NOTE Notes	OPZIONI LEVA Lever options
CL034	**POMPA FRENO 16X16 FORGIATA, CON LEVA FISSA** forged brake master cylinder 16x16, with fix lever	**N** **NERO** / black **O** **ARANCIONE** / orange **Y** **ORO** / gold **B** **BLU** / blue **R** **ROSSO** / red **S** **ARGENTO** / silver **G** **VERDE** / green	** **PERNO DI REGOLAZIONE: STESSO COLORE LEVA** adjusting knob: same color as lever	• **LUNGA** long: 17 cm • **CORTA** short: 15 cm • **CON RST** with RST
CL033	**POMPA FRENO 16X16 FORGIATA, CON LEVA SNODATA** forged brake master cylinder 16x16, with folding lever			
CL028	**POMPA FRENO 16X18 FORGIATA, CON LEVA FISSA** forged brake master cylinder 16x18, with fix lever			
CL027	**POMPA FRENO 16X18 FORGIATA, CON LEVA SNODATA** forged brake master cylinder 16x18, with folding lever			
CL030	**POMPA FRENO PRS 16X17-18-19 FORGIATA, CON LEVA SNODATA** forged PRS brake master cylinder 16x17-18-19, with folding lever			

POMPE FRENO Ø 19 / brake master cylinders Ø 19

CODICE Reference	DESCRIZIONE Description	COLORI LEVE Levers colours	NOTE Notes	OPZIONI LEVA Lever options
CL023	**POMPA FRENO 19X18 FORGIATA, CON LEVA FISSA** forged brake master cylinder 19x18, with fix lever	**N** **NERO** / black **O** **ARANCIONE** / orange **Y** **ORO** / gold **B** **BLU** / blue **R** **ROSSO** / red **S** **ARGENTO** / silver **G** **VERDE** / green	** **PERNO DI REGOLAZIONE: STESSO COLORE LEVA** adjusting knob: same color as lever	• **LUNGA** long: 17 cm • **CORTA** short: 15 cm • **CON RST** with RST
CL021	**POMPA FRENO 19X18 FORGIATA, CON LEVA SNODATA** forged brake master cylinder 19x18, with folding lever			
CL039	**POMPA FRENO 19X19 FORGIATA, CON LEVA FISSA** forged brake master cylinder 19x19, with fix lever			
CL040	**POMPA FRENO 19X19 FORGIATA, CON LEVA SNODATA** forged brake master cylinder 19x19, with folding lever			
CL029	**POMPA FRENO 19X20 FORGIATA, CON LEVA FISSA** forged brake master cylinder 19x20, with fix lever			
CL035	**POMPA FRENO 19X20 FORGIATA, CON LEVA SNODATA** forged brake master cylinder 19x20, with folding lever			
CL022	**POMPA FRENO PRS 19X17-18-19 FORGIATA, CON LEVA SNODATA** forged PRS brake master cylinder 19x17-18-19, with folding lever			

ACCESSORI / accessories

CODICE Reference	DESCRIZIONE Description
RC003	**CAVALLOTTO PER POMPA FRENO ACCOSSATO BLACK EDITION, LINEA STREET RACING, NERO** black riser for Accossato Street Racing-line black -edition brake master cylinders

NOTA: PER IMPIANTI BIDISCO SI CONSIGLIANO POMPE DIAMETRO 19; PER IMPIANTI MONODISCO SI CONSIGLIANO POMPE DIAMETRO 16
note: diameter 19 is suggested for double brake rotor-systems; diameter 16 is suggested for single brake rotor-systems

STREET RACING

POMPE FRIZIONI RADIALI "BLACK EDITION"

"Black Edition" radial clutch master cylinders



POMPE FRIZIONI RADIALI "BLACK EDITION"
"Black Edition" radial clutch master cylinders

POMPE FRIZIONE Ø 16
clutch master cylinders Ø 16

CODICE Reference	DESCRIZIONE Description	COLORI LEVE Levers colours	NOTE Notes	OPZIONI LEVA Lever options
CL026	**POMPA FRIZIONE 16X16 FORGIATA, CON LEVA FISSA** forged clutch master cylinder 16x16, with fix lever	N **NERO** / black O **ARANCIONE** / orange Y **ORO** / gold B **BLU** / blue R **ROSSO** / red S **ARGENTO** / silver G **VERDE** / green	** **PERNO DI REGOLAZIONE: STESSO COLORE LEVA** adjusting knob: same color as lever	• **LUNGA** long: 17 cm • **CORTA** short: 15 cm • **CON RST** with RST
CL025	**POMPA FRIZIONE 16X16 FORGIATA, CON LEVA SNODATA** forged clutch master cylinder 16x16, with folding lever			
CL032	**POMPA FRIZIONE 16X18 FORGIATA, CON LEVA FISSA** forged clutch master cylinder 16x18, with fix lever			
CL031	**POMPA FRIZIONE 16X18 FORGIATA, CON LEVA SNODATA** forged clutch master cylinder 16x18, with folding lever			
CL024	**POMPA FRIZIONE PRS 16X15-16-17 FORGIATA, CON LEVA SNODATA** forged PRS clutch master cylinder 16x15-16-17, with folding lever			

POMPE FRIZIONE Ø 19
clutch master cylinders Ø 19

CODICE Reference	DESCRIZIONE Description	COLORI LEVE Levers colours	NOTE Notes	OPZIONI LEVA Lever options
CL038	**POMPA FRIZIONE 19X20 FORGIATA, CON LEVA SNODATA** forged clutch master cylinder 19x20, with folding lever	N **NERO** / black O **ARANCIONE** / orange Y **ORO** / gold B **BLU** / blue R **ROSSO** / red S **ARGENTO** / silver G **VERDE** / green	** **PERNO DI REGOLAZIONE: STESSO COLORE LEVA** adjusting knob: same color as lever	• **LUNGA** long: 17 cm • **CORTA** short: 15 cm • **CON RST** with RST

ACCESSORI / accessories

CODICE Reference	DESCRIZIONE Description
RC004	**CAVALLOTTO PER POMPA FRIZIONE ACCOSSATO BLACK EDITION, LINEA STREET RACING, NERO** black riser for Accossato Street Racing-line black -edition clutch master cylinders

NOTA: PER IMPIANTI BIDISCO SI CONSIGLIANO POMPE DIAMETRO 19; PER IMPIANTI MONODISCO SI CONSIGLIANO POMPE DIAMETRO 16
note: diameter 19 is suggested for double brake rotor-systems; diameter 16 is suggested for single brake rotor-systems

STREET RACING

POMPE RADIALI CON VASCHETTA INTEGRATA
radial master cylinders with integrated fluid reservoir









COLORI LEVE Levers colours	NOTE Notes	OPZIONI LEVA Lever options
N **NERO** / black O **ARANCIONE** / orange Y **ORO** / gold B **BLU** / blue R **ROSSO** / red S **ARGENTO** / silver G **VERDE** / green	** **PERNO DI REGOLAZIONE E TAPPO VASCHETTA: STESSO COLORE LEVA** adjusting knob and fluid reservoir cap: same color as lever	• **LUNGA** long: 17 cm • **CORTA** short: 15 cm • **CON RST** with RST

POMPE RADIALI CON VASCHETTA INTEGRATA
radial master cylinders with integrated fluid reservoir

POMPE FRENO
brake master cylinders

Ø 16

CODICE Reference	DESCRIZIONE Description
PK034	**POMPA FRENO 16X16 FORGIATA, CON VASCHETTA INTEGRATA, CON LEVA FISSA** forged brake master cylinder 16x16, with integrated fluid reservoir & fix lever
PK033	**POMPA FRENO 16X16 FORGIATA, CON VASCHETTA INTEGRATA, CON LEVA SNODATA** forged brake master cylinder 16x16, with integrated fluid reservoir & folding lever
PK028	**POMPA FRENO 16X18 FORGIATA, CON VASCHETTA INTEGRATA, CON LEVA FISSA** forged brake master cylinder 16x18, with integrated fluid reservoir & fix lever
PK027	**POMPA FRENO 16X18 FORGIATA, CON VASCHETTA INTEGRATA, CON LEVA SNODATA** forged brake master cylinder 16x18, with integrated fluid reservoir & folding lever
PK030	**POMPA FRENO PRS 16X17-18-19 FORGIATA, CON VASCHETTA INTEGRATA, CON LEVA SNODATA** forged PRS brake master cylinder 16x17-18-19, with integrated fluid reservoir & folding lever

Ø 19

CODICE Reference	DESCRIZIONE Description
PK023	**POMPA FRENO 19X18 FORGIATA, CON VASCHETTA INTEGRATA, CON LEVA FISSA** forged brake master cylinder 19x18, with integrated fluid reservoir & fix lever
PK021	**POMPA FRENO 19X18 FORGIATA, CON VASCHETTA INTEGRATA, CON LEVA SNODATA** forged brake master cylinder 19x18, with integrated fluid reservoir & folding lever
PK039	**POMPA FRENO 19X19 FORGIATA, CON VASCHETTA INTEGRATA, CON LEVA FISSA** forged brake master cylinder 19x19, with integrated fluid reservoir & fix lever
PK040	**POMPA FRENO 19X19 FORGIATA, CON VASCHETTA INTEGRATA, CON LEVA SNODATA** forged brake master cylinder 19x19, with integrated fluid reservoir & folding lever
PK029	**POMPA FRENO 19X20 FORGIATA, CON VASCHETTA INTEGRATA, CON LEVA FISSA** forged brake master cylinder 19x20, with integrated fluid reservoir & fix lever
PK035	**POMPA FRENO 19X20 FORGIATA, CON VASCHETTA INTEGRATA, CON LEVA SNODATA** forged brake master cylinder 19x20, with integrated fluid reservoir & folding lever
PK022	**POMPA FRENO PRS 19X17-18-19 FORGIATA, CON VASCHETTA INTEGRATA, CON LEVA SNODATA** forged PRS brake master cylinder 19x17-18-19, with integrated fluid reservoir & folding lever

POMPE FRIZIONE
clutch master cylinders

Ø 16

CODICE Reference	DESCRIZIONE Description
PK026	**POMPA FRIZIONE 16X16 FORGIATA, CON VASCHETTA INTEGRATA, CON LEVA FISSA** forged clutch master cylinder 16x16, with integrated fluid reservoir & fix lever
PK025	**POMPA FRIZIONE 16X16 FORGIATA, CON VASCHETTA INTEGRATA, CON LEVA SNODATA** forged clutch master cylinder 16x16, with integrated fluid reservoir & folding lever
PK032	**POMPA FRIZIONE 16X18 FORGIATA, CON VASCHETTA INTEGRATA, CON LEVA FISSA** forged clutch master cylinder 16x18, with integrated fluid reservoir & fix lever
PK031	**POMPA FRIZIONE 16X18 FORGIATA, CON VASCHETTA INTEGRATA, CON LEVA SNODATA** forged clutch master cylinder 16x18, with integrated fluid reservoir & folding lever
PK024	**POMPA FRIZIONE PRS 16X15-16-17 FORGIATA, CON VASCHETTA INTEGRATA, CON LEVA SNODATA** forged PRS clutch master cylinder 16x15-16-17, with integrated fluid reservoir & folding lever

Ø 19

CODICE Reference	DESCRIZIONE Description
PK038	**POMPA FRIZIONE 19X20 FORGIATA, CON VASCHETTA INTEGRATA, CON LEVA SNODATA** forged clutch master cylinder 19x20, with integrated fluid reservoir & folding lever

ACCESSORI / accessories

CODICE Reference	POMPE FRENO "PK" "PK" brake master cylinder
RC013	**CAVALLOTTO PER POMPA FRENO ACCOSSATO CON VASCHETTA INTEGRATA, NERO** black riser for Accossato brake master cylinders with integrated fluid reservoir
MH007	**SUPPORTO SPECCHIETTO CNC PER POMPE FRENO ACCOSSATO, CON VASCHETTA INTEGRATA, FILETTO M8** Cnc-worked mirror holder for Accossato brake master cylinders with integrated fluid reservoir, screw pitch M8
MH008	**SUPPORTO SPECCHIETTO CNC PER POMPE FRENO ACCOSSATO, CON VASCHETTA INTEGRATA, FILETTO M10X1,25** Cnc-worked mirror holder for Accossato btrake master cylinders with integrated fluid reservoir, screw pitch M10x1,25

CODICE Reference	POMPE FRIZIONE "PK" "PK" clutch master cylinder
RC014	**CAVALLOTTO PER POMPA FRIZIONE ACCOSSATO CON VASCHETTA INTEGRATA, NERO** black riser for Accossato clutch master cylinders with integrated fluid reservoir
MH009	**SUPPORTO SPECCHIETTO CNC PER POMPE FRIZIONE ACCOSSATO, CON VASCHETTA INTEGRATA, FILETTO M8** cnc-worked mirror holder for Accossato clutch master cylinders with integrated fluid reservoir, screw pitch M8
MH010	**SUPPORTO SPECCHIETTO CNC PER POMPE FRIZIONE ACCOSSATO, CON VASCHETTA INTEGRATA, FILETTO M10X1,25** cnc-worked mirror holder for Accossato clutch master cylinders with integrated fluid reservoir, screw pitch M10x1,25

NOTA: PER IMPIANTI BIDISCO SI CONSIGLIANO POMPE DIAMETRO 19; PER IMPIANTI MONODISCO SI CONSIGLIANO POMPE DIAMETRO 16
note: diameter 19 is suggested for double brake rotor-systems; diameter 16 is suggested for single brake rotor-systems

STREET RACING

LEVE CNC FRENO - FRIZIONE / brake & clutch CNC-worwed levers



COLORI LEVE FRENO E FRIZIONE Brake & clutch lever colours	
N	**NERO** / black
O	**ARANCIONE** / orange
Y	**ORO** / gold
B	**BLU** / blue
R	**ROSSO** / red
S	**ARGENTO** / silver
G	**VERDE** / green

OPZIONI LEVA FRENO E FRIZIONE
Brake & clutch lever options

- **LUNGA**
  long: 17 cm
- **CORTA**
  short: 15 cm

ACCOSSATO

STREET RACING

LEVE CNC FRENO - FRIZIONE / brake & clutch CNC-worwed levers

MODELLO Model	ANNI / years DA From	A To	LEVA FRENO Brake lever	LEVA FRIZIONE Clutch lever
APRILIA				
RSV4 RR	2015	2016	EDF011	ESV004
RSV4 RACING FACTORY LE	2015	2016	EDF011	ESV004
RSV RR RACER PACK	2015	2015	EDF011	ESV004
RSV4 RACING FACTORY APRC ABS	2013	2014	EDF011	ESV004
RSV4 APRC R ABS	2013	2014	EDF011	ESV004
RSV4 FACTORY APRC	2011	2012	EDF011	ESV004
RSV4 APRC R	2011	2012	EDF011	ESV004
RSV4 R	2009	2010	EDF011	ESV004
RSV4 FACTORY - SBK RACING	2009	2010	EDF011	ESV004
RSV R - FACTORY - DREAM	2004	2008	EDF011	ESV004
TUONO V4R/Factory	2011	2016	EDB080	ESV004
TUONO / R	2003	2009	EDB080	ESC080
CAPONORD 1200/Rally	2013	2016	EDB080	ESC080
SHIVER	2007	2016	EDF023	ESC023
SHIVER GT	2009	2009	EDF023	-
DORSODURO 1200	2010	2015	EDB080	ESC080
DORSODURO 750	2008	2016	EDF023	ESC023
MANA	2007	2011	EDF023	-
MANA GT	2009	2016	EDF023	-
DORSODURO	2008	2016	EDF023	ESC080
DORSODURO FACTORY	2010	2013	EDF023	ESC080
RSV MILLE / R	1999	2003	EDB080	ESC080
ETV CAPONORD ABS	2004	2007	EDF016	ESC080
RST1000 FUTURA	2001	2003	EDF016	-
PEGASO STRADA - FACTORY - TRAIL	2005	2009	EDF016	-
FALCO / SL1000	2000	2004	EDB080	ESC080
BMW				
S1000RR (Not Comp ver.)	2015	2016	EDF022	ESB22H
S1000R (w and w/o CC)	2015	2016	EDF022	ESB22H
S1000RR (NOT Comp ver.)	2010	2014	EDF022	ESB022
S1000R (w and w/o CC)	2014		EDF022	ESB022
K1600 GT/GTL	2011	2015	-	ESB002
K1300 S/R/GT	2009	2015	-	ESB002
F800GS/Adventure	2008	2016	EDB001	ESB008
F800R	2009	2016	EDB001	ESB008
F800GT	2013	2016	EDB001	ESB008
F800ST	2006	2015	EDB001	ESB008
F800S	2006	2014	EDB001	ESB008
F700GS	2013	2016	EDB001	ESB008
F650GS	2008	2012	EDB001	ESB008
K1200R	2005	2008	-	ESB002
K1200R SPORT	2006	2008	-	ESB002
K1200S	2004	2008	-	ESB002
R1200R	2006	2014	-	ESB002
R1200RT /SE	2010	2013	-	ESB002
R1200S	2006	2008	-	ESB002
R1200ST	2005	2008	-	ESB002
R1200GS ADVENTURE	2006	2013	-	ESB002
R1200GS	2004	2012	-	ESB002
HP2 SPORT	2008	2011	EDM001	ESM011
HP2 Enduro	2005	2008	EDB001	ESB002
HP2 Megamoto	2006	2009	EDB001	ESB002
BUELL				
1125R	2008	2009	EDF014	ESC777
1125CR	2009		EDF014	ESC777
XB12R	2009		EDF014	ESB055
XB12Ss	2009		EDF014	ESB055
XB12Scg	2009		EDF014	ESB055
Ulysses XB12XT	2009		EDF021	ESB055
Ulysses XB12X	2009		EDF021	ESB055
XB12 all models up to 08 only	2004	2008	EDF021	ESB055
XB9 all models	2003	2009	EDF021	ESB055
X1 Lightning	1998	2002	EDF014	ESB055
S1 Lightning	1997	1998	EDF014	ESB055
M2 Cyclone	1997	2002	EDF014	ESB055
DUCATI				
DIAVEL /CARBON	2011	2015	EDF011	ESH011
Diavel/Carbon/XDiavel/S	2016		EDF099	ESH011
1199 Panigale/S/Tricolor	2012	2015	EDF099	ESH011
899 Panigale	2014	2015	EDF099	ESH011
1299 Panigale/S/R	2015	2016	EDF099	ESH011
959 Panigale	2016		EDF099	ESH011
1198/S/R	2009	2011	EDF011	ESH011
1098/S/Tricolor	2007	2008	EDF011	ESH011
848 /EVO	2007	2013	EDF011	ESH011
MULTISTRADA 1200/S/GT	2010	2016	EDF011	ESH011
STREETFIGHTER /S	2009	2013	EDF011	ESH011
STREETFIGHTER 848	2012	2015	EDF011	ESH011
MONSTER 1200 / S / R	2014	2016	EDF099	ESH011
M1100/S/EVO MONSTER	2009	2013	EDF011	ESH011
821 MONSTER/Dark/Stripe	2014	2016	EDB012	ESD082
796 MONSTER	2011	2014	EDB012	ESD022
696 MONSTER	2009	2014	EDB012	ESD022
HYPERMOTARD 1100/S/EVO SP	2007	2012	EDD001	ESH011
HYPERMOTARD 796	2010	2012	EDB012	ESD022
HYPERMOTARD 821 SP	2013	2015	-	ESD082
HYPERMOTARD 821 / HYPERSTRADA	2013	2015	EDB012	ESD082
HYPERMOTARD 939/Strada	2016		EDB012	ESD082
Scrambler	2015	2016	-	ESD082
HYPERMOTARD 939 SP	2016		-	ESD082
999/S/R	2003	2006	EDF011	ESH011
749/S/R	2003	2006	EDF011	ESH011
S4RS	2006	2008	EDF011	ESH011
MS4/MS4R	2001	2006	EDB080	ESC080
M900/M1000	2000	2005	EDB080	ESC080
900SS/1000SS	1998	2006	EDB080	ESC080
996/998/B/S/R	1999	2003	EDB080	ESC080
748/750SS	1999	2002	EDB080	ESC080
MTS1000SDS/DS	2004	2006	EDB080	ESC080
MTS1100/S	2007	2009	EDB080	ESC080
ST4/S/ABS	2004	2006	EDB080	ESC080
ST3/S/ABS	2003	2007	EDB080	ESC080
SPORT 1000	2006	2009	EDB080	ESC080
GT 1000	2006	2010	EDB080	ESC080
PAUL SMART LE	2006		EDB080	ESC080
S2R 1000	2006	2008	EDB080	ESC080
HONDA				
GROM	2014	2016	EDF025	ESH250
CBR250R	2011	2013	EDF025	ESH250
CBR300R/CB300F/FA	2014	2016	EDF025	ESH250
CBR500R/CB500F/X	2013	2015	EDF025	ESH250
CB600F	2007	2013	EDF018	ESH607
CBR600F	2011	2013	EDF018	ESH607
CBR650F/CB650F	2014	2016	EDF018	ESH065
CB599 / CB600 HORNET	1998	2006	EDF018	ESH626
CBR 600 F2,F3,F4,F4i	1991	2007	EDF018	ESH626
CB919	2002	2007	EDF018	ESH626
CB1000R	2008	2016	EDF033	ESH033
CBR600RR	2003	2006	EDF029	ESY688H
CBR600RR	2007	2016	EDF033	ESY688H
CBR900RR	1993	1999	EDF018	ESH626

STREET RACING

LEVE CNC FRENO - FRIZIONE / brake & clutch CNC-worwed levers

ACCOSSATO

MODELLO Model	ANNI / years DA From	A To	LEVA FRENO Brake lever	LEVA FRIZIONE Clutch lever
CBR929RR	2000	2001	EDF029	ESH626
CBR954RR	2002	2003	EDF029	ESY688H
CBR1000RR / FIREBLADE	2004	2007	EDF033	ESH033
CBR1000RR/FIREBLADE/SP	2008	2016	EDF033	ESY688H
RC51 / RVT1000 SP-1/SP-2	2000	2006	EDF029	ESH033
VF750S SABRE	1982	1986	EDF018	ESV000
VFR750	1991	1997	EDF018	ESV000
VFR800	1998	2001	-	ESV000
VFR800/F	2002	2016	EDF018	ESV000
VTR1000F / FIRESTORM	1998	2005	EDF018	ESV000
CBF1000	2006	2009	EDF018	ESV000
CBR1100XX / BLACKBIRD	1997	2007	-	ESV000
ST1300/ST1300A	2003	2007	-	ESV000
VTX1300	2003	2008	EDF018	ESH626
X-11	1999	2002	-	ESH626
NC700 S/X	2012	2013	EDF018	ESH626
NC750 S/X	2014	2015	EDF018	ESH250
VFR 1200/F	2010	2016	EDF012	ESH033
CBF600/SA	2010	2013	EDF018	ESH607
CBF1000/A	2010	2013	EDF018	ESH033
ST 1300	2008	2012	EDF012	ESV000
CB1100/GIO special	2013	2016	EDF018	ESH033
Black Spirit	2014	2016	EDF018	ESH250
HYOSUNG				
GT250R CARBURETION	2006	2010	EDF008	ESH008
COMET GT 250R FI EURO3	2007	2008	EDF008	ESH008
TE RAPIER	2007	2008	EDF008	ESH008
GT 650R TTC CARBURETION	2006	2006	EDF008	ESH008
GT 650R FI MIKUNI	2007	2007	EDF008	ESH008
GT 650R	2005	2006	EDF008	ESH008
GT 650 FI MIKUNI	2007	2008	EDF008	ESH008
ST7	2010	2010	EDF008	ESH008
KAWASAKI				
NINJA 300R	2013	2016	-	-
NINJA 250R	2008	2012	-	-
ZX6R/636	2007	2016	EDF088	ESK828
ZX636R / ZX6RR	2005	2006	EDF035	ESK828
ZX6R / ZX636R / ZX6RR	2000	2004	EDF014	ESK828
ZX-6	1990	1999	EDF014	-
ZX10R	2004	2005	-	ESK828
ZX10R	2006	2015	EDF088	ESK828
ZX10R	2016		EDF099	ESK828
H2 / H2R	2015	2016	EDF099	ESH011
Z1000SX/NINJA 1000/Tourer	2011	2016	EDF088	ESK828
Z1000	2007	2016	EDF088	ESK828
Z800/E version	2013	2016	EDF021	-
W800/SE	2012	2016	-	ESK750
Z750R	2011	2012	EDF088	-
ZX1400 / ZX14R / ZZR1400	2006	2016	EDF088	ESH088
GTR1400 / CONCOURS	2007	2016	EDF088	ESH088
VULCAN/S 650cc	2015	2016	EDF021	ESK750
VERSYS (650cc)	2006	2008	-	ESK750
VERSYS (650cc)	2009	2014	-	ESK750
VERSYS 650cc	2015	2016	EDF021	ESK750
ZZR600	1990	2004	-	ESK750
ZX7R / ZX7RR	1989	2003	-	ESC777
ZX9	1994	1997	EDF014	ESC777
ZX9R	1998	1999	EDF014	ESK750
ZX9R	2000	2003	EDF014	-
Z750 (not Z750S model)	2007	2012	EDF021	-
ZXR400	all years		-	ESK750

MODELLO Model	ANNI / years DA From	A To	LEVA FRENO Brake lever	LEVA FRIZIONE Clutch lever
ZZR/ZX1400 S Version	2016		EDF099	-
NINJA 400R	2011		EDF044	-
KTM				
RC8 / R	2009	2016	EDF011	ESM011
1290 Super Duke R/GT	2014	2016	EDF011	ESM011
1190 Adventure/R	2013	2016	EDD001	ESA090
Super Adventure 1290	2015	2016	EDD001	ESA090
ADVENTURE 1050	2016		EDB012	ESA090
990 SuperDuke	2005	2012	EDF011	ESM011
990 SMR/SMT	2009	2013	EDD001	ESM069
690 Duke/SMC/SMCR	2014	2016	EDB012	ESA090
690 Duke R	2014	2016	EDF011	ESA090
690 Enduro R	2014	2016	EDB012	ESA090
690 SMC/SMC-R/Duke/Duke R	2012	2013	EDB012	ESM069
690 Duke	2008	2011	EDF011	ESM011
390 Duke/RC390	2013	2016	EDF039	ESK390
200 Duke/RC200	2014	2015	EDF039	ESK390
RC125	2014	2015	EDF039	ESK390
RC125/125 Duke	2014	2016	EDF039	ESK390
MOTO GUZZI				
CALIFORNIA Custom/Touring/Classic	2014	2016	EDF023	ESC023
GRISO	2006	2015	EDF016	ESC080
BREVA 750	2004	2009	-	ESD037
BREVA 1100	2006	2012	EDF016	ESC080
BREVA 850	2006	2007	EDF016	ESC080
BREVA 1200	2007	2007	EDF016	ESC080
BELLAGIO - AQUILA NERA	2007	2013	EDF016	ESC080
NORGE 1200/GT8V	2006	2015	EDF016	ESC080
NORGE 850	2007	2007	EDF016	ESC080
1200 SPORT	2007	2013	EDF016	ESC080
STELVIO	2008	2015	EDF016	ESC080
V7 Racer	2011	2015	-	ESD037
V7 Classic	2008	2016	-	ESD037
V7 Stone/Special	2012	2016	-	ESD037
AUDACE	2015	2016	EDF023	ESC023
ELDORADO	2015	2016	EDF023	ESC023
MGX21	2016		-	ESC023
MV AGUSTA				
F4 - F4R - F4RR	2013	2015	EDF011	ESH011
F4 RC	2015	2015	EDF011	ESH011
F4S - R - RR - FRECCE TRICOLORE	2010	2012	EDF011	ESH011
F3 675	2013	2016	EDF035	ESM048
F3 800/AGO/RC/AMG	2014	2016	EDF035	ESM048
Brutale 800/RR	2012	2015	EDF015	ESM048
Rivale 800	2014	2016	EDF015	ESM048
Dragster 800/RR	2014	2016	EDF015	ESM048
Turismo Veloce 800	2015	2015	EDF015	ESM048
Brutale 675	2012	2016	EDF015	ESM048
Brutale 920 - 990R - 1090RR	2010	2011	EDF015	-
BRUTALE R - RR	2012	2012	EDF015	-
BRUTALE 1090 - 1090R - CORSA	2013	2015	EDF015	-
STRADALE	2015	2015	EDF015	-
SUZUKI				
GSXR600	2011	2016	EDF035	ESV004
GSXR600	2006	2010	EDF035	ESS035
GSXR600	2004	2005	EDF035	ESS248
GSXR600	1997	2003	EDF014	ESS248
GSXR750	2011	2016	EDF035	ESV004
GSXR750	2006	2010	EDF035	ESS035
GSXR750	2004	2005	EDF035	ESS248
GSXR750	1996	2003	EDF014	ESS248

LEVE CNC FRENO - FRIZIONE / brake & clutch CNC-worwed levers

MODELLO Model	ANNI / years DA From	A To	LEVA FRENO Brake lever	LEVA FRIZIONE Clutch lever
GSXR1000	2009	2016	EDF035	ESV004
GSXR1000	2007	2008	EDF035	ESS014
GSXR1000	2005	2006	EDF035	ESS035
GSXR1000	2001	2004	-	ESS248
GSX-S1000/F/ABS	2015	2016	EDF035	ESV004
HAYABUSA/GSXR1300	2008	2016	EDF041	ESV014
HAYABUSA/GSXR1300	1999	2007	-	ESS014
B-KING	2008	2011	EDF035	ES031
GSR750/GSX-S750	2011	2016	EDF014	ESS248
GSX650F	2008	2015	EDF014	ESS014
GSF650 BANDIT	2007	2010	EDF014	ESS014
GSX1250 F/SA/ABS	2010	2016	EDF014	ESS014
GSF1250 BANDIT	2007	2015	EDF014	ESS014
GSF1200 BANDIT	2001	2006	EDF014	ESS014
SFV650 GLADIUS	2009	2015	EDF014	ESS248
SV650/S	1999	2009	-	ESS650
SV650	2016		-	ESS248
DL650/V-STROM	2011	2012	EDF014	ESS248
DL650/V-STROM	2004	2010	EDF014	ESS650
600/750 KATANA	1998	2006	-	ESS650
GSR600	2006	2011	EDF014	-
TRIUMPH				
DAYTONA 675	2006	2015	EDF035	EST333
DAYTONA 675 R	2011	2016	EDF011	EST333
SPEED TRIPLE 1050	2011	2015	EDF011	EST333
SPEED TRIPLE 1050/S	2016		-	EST333P
SPEED TRIPLE	2004	2007	EDF014	EST333
SPEED TRIPLE R	2012	2015	EDF011	EST333
SPEED TRIPLE	2008	2010	EDF035	EST333
SPEED TRIPLE R	2016		-	EST333P
SPEED TRIPLE	1997	2003	EDF014	EST955
TIGER 1050/Sport	2007	2015	EDF014	EST333
TIGER 800 XC/XCX/XR/XRX	2015	2016	EDF014	EST333P
THRUXTON	2004	2015	EDF014	EST333
TIGER 800/XC	2011	2014	EDF014	EST333
THRUXTON R	2016		-	EST333P
THRUXTON	2016		EDF014	EST333P
THRUXTON Steve McQueen SE	2012		EDF014	EST333
BONNEVILLE /SE/T100/Black	2006	2015	EDF014	EST333
BONNEVILLE T120	2016		EDF014	EST333P
SCRAMBLER	2006	2015	EDF014	EST333
675 STREET TRIPLE	2008	2015	EDF014	EST333
675 STREET TRIPLE R/RX	2009	2016	-	EST333
DAYTONA 955i	1997	2003	EDF014	EST955
DAYTONA 955i	2004	2006	EDF014	EST333
SPEED FOUR	2005	2006	EDF014	EST333

MODELLO Model	ANNI / years DA From	A To	LEVA FRENO Brake lever	LEVA FRIZIONE Clutch lever
SPEED FOUR	2003	2004	EDF014	EST955
DAYTONA 600/650	2004	2005	EDF014	EST333
TT 600	2000	2003	EDF014	EST955
SPRINT GT	2011	2015	EDF014	EST333
SPRINT ST/RS	2004	2009	EDF014	EST333
SRINT ST	1997	2003	EDF014	EST955
SPRINT RS	1999	2003	EDF014	EST955
ROCKET III	2004	2007	EDF014	EST333
ROCKET III CLASSIC	2007	2010	EDF014	EST333
ROCKET III ROADSTER	2010	2015	EDF014	EST333
SPEEDMASTER	2006	2016	EDF014	EST333
AMERICA	2004	2005	EDF014	EST955
AMERICA/LT	2006	2016	EDF014	EST333
TIGER 1200 EXPLORER	2012	2016	EDF014	ESC777
Trophy/SE	2013	2015	EDF014	ESC777
STREET TWIN	2016		EDF014	EST333P
YAMAHA				
YZF R125	2008	2011	EDR15L	ESR15R
YZF R1/R1M	2015	2016	EDR015	-
YZF R1	2009	2014	EDR019	-
YZF R1	2007	2008	EDR104	ESY688
YZF R1	2002	2003	EDF014	ESY688
YZF R1	1999	2001	EDF021	ESY688
YZF R6	2005	2016	EDR104	-
SUPERTENERE/XT1200ZE	2012	2016	EDF016	ESC777
V-MAX	2009	2016	-	ESC777
FZ6 FAZER	2004	2010	EDF016	-
FZ6R	2009	2015	EDF016	-
FZ8	2011	2015	EDF016	-
MT-10	2016		EDF016	ESV004
MT-07/FZ-07	2014	2016	EDF016	-
FJ-09/MT-09 Tracer	2015	2016	EDF016	ESV004
FZ-09/MT-09/SR (Not FJ-09)	2014	2015	EDF016	-
FZ1 FAZER	2006	2013	EDF016	ESY688
FZ1 FAZER	2001	2005	-	ESY688
FJR 1300	2004	2016	EDF016	-
XJ6 DIVERSION	2009	2015	EDF016	-
MT-01	2004	2009	-	ESC777
TDM 900	2012	2014	EDF016	ESY695
XJR 1300/Racer	2004	2016	EDF016	ESC777
XSR 700 ABS	2016		EDF016	-
XSR 900 ABS	2016		EDF016	-
XV 950 Racer	2016		EDF016	-
XJR1300	2004	2014	EDF016	ESC777
XJR1300	1995	2003	-	ESC777

STREET RACING

POMPE FRENO PER CUSTOM - MANUBRIO DA 1 POLLICE (25,4MM)
custom-bike brake master cylinders - 1 inch (25,4 mm) handlebar

COLORI LEVE Levers colours	OPZIONI LEVA Lever options
N **NERO** / black **O** **ARANCIONE** / orange **Y** **ORO** / gold **B** **BLU** / blue **R** **ROSSO** / red **S** **ARGENTO** / silver **G** **VERDE** / green	• **LUNGA** long: 17 cm • **CORTA** short: 15 cm • **CON RST** with RST



CON CORPO POMPA ANTRACITE
with charcoal-grey body

CODICE Reference	DESCRIZIONE Description
PC003	**POMPA FRENO RADIALE 19X18, FORGIATA, CON LEVA FISSA** forged brake master cylinder 19x18 with fixed lever
PC002	**POMPA FRENO RADIALE 19X18, FORGIATA, CON LEVA SNODATA** forged brake master cylinder 19x18 with folding lever
PC005	**POMPA FRENO RADIALE 19X19, FORGIATA, CON LEVA FISSA** forged brake master cylinder 19x19 with fixed lever
PC004	**POMPA FRENO RADIALE 19X19, FORGIATA, CON LEVA SNODATA** forged brake master cylinder 19x19 with folding lever
PC006	**POMPA FRENO RADIALE 19X20, FORGIATA, CON LEVA FISSA** forged brake master cylinder 19x20 with fixed lever
PC007	**POMPA FRENO RADIALE 19X20, FORGIATA, CON LEVA SNODATA** forged brake master cylinder 19x20 with folding lever
PC001	**POMPA FRENO PRS 19X17-18-19, FORGIATA, CON LEVA SNODATA** prs forged brake master cylinder 19x17-18-19 with folding lever

CON CORPO POMPA NERO
with black body

CODICE Reference	DESCRIZIONE Description
PC010	**POMPA FRENO RADIALE FORGIATA 19X18 LEVA FISSA** forged brake master cylinder 19x18 with foxed lever
PC009	**POMPA FRENO RADIALE FORGIATA 19X18 LEVA SNODATA** forged brake master cylinder 19x18 with folding lever
PC012	**POMPA FRENO RADIALE FORGIATA 19X19 LEVA FISSA** forged brake master cylinder 19x19 with fixed lever
PC011	**POMPA FRENO RADIALE FORGIATA 19X19 LEVA SNODATA** forged brake master cylinder 19x19 with folding lever
PC013	**POMPA FRENO RADIALE FORGIATA 19X20 LEVA FISSA** forged brake master cylinder 19x20 with fixed lever
PC014	**POMPA FRENO RADIALE FORGIATA 19X20 LEVA SNODATA** forged brake master cylinder 19x20 with folding lever
PC008	**POMPA FRENO FORGIATA PRS 19X17-18-19 LEVA SNODATA** prs forged brake master cylinder 19x174-18-19 with folding lever

ACCOSSATO

STREET RACING

MANOPOLE RACING ALLUMINIO CNC
aluminium cnc-worked racing grips



CODICE Reference	COLORI LEVE Levers colours
GR004N	N **NERO** / black
GR004B	B **BLU** / blue
GR004G	G **VERDE** / green
GR004R	R **ROSSO** / red
GR004Y	Y **ORO** / gold
GR0046	S **ARGENTO** / silver

APPLICATIVO / application list

MODELLO Model	MODELLO Model	MODELLO Model	MODELLO Model
APRILIA	749 R	ER6N	SV 600
CAPONORD	796	ZX-6R	B KING
DORSODURO FACTORY	916	Z 750	BANDIT
FACTORY	996 R	Z 1000	BURGMAN
FALCO	998 R	ZX-10R	GLADIUS
MANA GT	999 S	GTR 1400	GSR
RSV FACTORY	1100	ZZR 1400	GSX-F
RSV 4 '09-'10	HYPERMOTARD S	NINJA	GSX-R
RSV4 R FACTORY	MONSTER S	VERSYS	HAYABUSA
RSV R	MULTISTRADA S	KTM	1000
SHIVER GT	S2R	125	SV 1000 S
TUONO FACTORY	S4R	400	TL
BENELLI	GILERA	640	TRIUMPH
TNT	GP 800	690	995
TORNADO	NEXUS	950	1050
TRAK	HONDA	990	SPEED TRIPLE
BIMOTA	600	CRF CR	STREET TRIPLE R
DB5	1000	DR-Z	TIGER
DB7	CB	DUKE SUPERBIKE	YAMAHA
DB8	CBR RR	R	FJR
DELIRIO	HORNET	RC8 '08 →	FZ1
TESI	SH	RUNNER	FZ6 FAZER
BMW	SILVER WING	TM	FAZER 8
1200	TRANSALP	XR	FZ8
K 1200 R '05 - '08	HUSABERG	XT	MT - 01
R 1200 GS '04 - '07	SXV 450	YZ	MT - 03
R 1200 R '06 - '09	SXV 550	YZF	R1
R 1200 S '06 - '09	HUSQVARNA	MV AGUSTA	R6
1300	125	BRUTALE tutte - all	R7
CAGIVA	310	F4 '99 - '12	SUPER
RAPTOR 600	450	750	TENERÉ
RAPTOR 1000	510	910	T-MAX
DUCATI	610	SUZUKI	V-MAX
696	KAWASAKI	600	XT 1200
748 R S	250	750	XJR 1300

STREET RACING

MANOPOLE RISCALDATE / warming-up grips



CODICE Reference	DESCRIZIONE Description	CARATTERISTICHE TECNICHE Technical details		COLORE Colour
GR005	MANOPOLE RISCALDATE warming-up grips	LUNGHEZZA length	123 mm	N ■ NERO / black
		DIAMETRO Ø	22 mm	
		PESO NETTO net weight	221 gr	
		TENSIONE D'ALIMENTAZIONE electric tension	12 V	
		POTENZA RISCALDANTE rated heat	max 24 W	
		LUNGHEZZA length	25cm	

SPIEGAZIONE	Explanation
• STANDARD DI QUALITÁ SUPERIORE	• high-quality standard
• FACILI DA INSTALLARE	• easy to assamble
• DISPOSITIVO DI PROTEZIONE ANTI-INVERSIONE DI POLARITÁ INTEGRATO: IN CASO DI COLLEGAMENTO ERRATO, LA CENTRALINA NON SUBISCE DANNI	• anti-polarity inversion device integrated: in case of wrong connection, control unit won't undergo any damages
• REGOLAZIONE DI TEMPERATURA IN 4 POSIZIONI INTEGRATA ALLA MANOPOLA	• 4-position heat adjuster integrated to grip
• CENTRALINA DI REGOLAZIONE SEPARATA: IN CASO DI SOSTITUZIONE, NON OCCORRE SMONTARE LE MANOPOLE	• separated control unit: it allows replacement without grips dismantling
• MANOPOLE IN GOMMA CON DISEGNO ANTI-SCIVOLO	• rubber-coated grios, with non-slip pattern
• GUAINA IN CALZA TRECCIATA ESPANDIBILE PER LA PROTEZIONE DEI CABLAGGI ELETTRICI	• non-shrinkable tubing for cables protection

*** MANOPOLE VENDUTE A COPPIE** / grips sold in pairs

ACCOSSATO

STREET RACING

SEMI-MANUBRI RIALZATI REGOLABILI
adjustable raised clip-on



Altezza variabile
± 40 mm rispetto alla posizione originale
variable height
± 40 mm +/- then original position

CODICE Reference	DESCRIZIONE Description	Ø	COLORE Colour	APPLICATIVO Suitable for
CP005	SEMI-MANUBRI RIALZATI REGOLABILI	41 MM	T **TITANIO** / titanium	**UNIVERSALI - ADATTABILI PER FORCELLE Ø 41MM** universal- adjustable for Ø 41mm-forks
CP006	adjustable raised clip-on	46 MM		**UNIVERSALI - ADATTABILI PER FORCELLE Ø 46MM** universal- adjustable for Ø 46mm-forks

APPLICATIVO SPECIFICO / specific application list

CODICE Reference	MARCA Brand	MODELLO Model
CP005	SUZUKI	SV 650

CODICE Reference	MARCA Brand	MODELLO Model
CP006	SUZUKI	SV1000

SPIEGAZIONE	Explanation
• **REALIZZATI IN ALLUMINIO FORGIATO** • **CONSENTONO DI REGOLARE L'ALTEZZA DELLA POSIZIONE DI GUIDA ORIGINALE, ASSECONDANDO LE ESIGENZE DEL PILOTA**	• aluminium-forged • they allow to adjust the length of original driving position, according to drivers' needs

STREET RACING

KIT FLANGE FRENO / brake-flanges kit

T-MAX



CODICE Reference	DESCRIZIONE Description	CARATTERISTICHE TECNICHE Technical details		APPLICAZIONI /Application list	
				MODELLO / model	ANNI / years
FL001	FLANGIA FRENO T-MAX T-MAX brake flange	STAFFE PER PINZE RADIALI brackets for radial brake calipers	INTERASSE / distance 108 mm	YAMAHA T-MAX 500	2008 - 2014
		COLORE / colour	N ■ NERO / black		
		CONTENUTO CONFEZIONE packaging	FLANGIA DX + FLANGIA SX R. flange + L. flange	YAMAHA T-MAX 530	2008 - 2014

SPIEGAZIONE	Explanation
QUESTO KIT REALIZZATO INTERAMENTE IN CNC PERMETTE LA TRASFORMAZIONE DELLE PINZE FRENO ORIGINALI, DA ASSIALI A RADIALI. LA MODIFICA DELL'IMPIANTO FRENANTE MIGLIORERÀ LA POTENZA DI FRENATA DELLA VOSTRA MOTO, RENDENDOLA PIÙ DECISA E SICURA. IL KIT È COMPATIBILE CON I DISCHI FRENO ORIGINALI; MONTANDO I DISTANZIALI, È POSSIBILE MONTARE DISCHI FRENO MAGGIORATI.	Utterly CNC-worked, this kit allows to turn original brake calipers form axial into radial. Braking power will definitely inhence in promptness and safety as well. Kit suits oem brake calipers. Furthermore, by assembling wheel spacers, it is also possible to install oversize brake rotors.

CODICE Reference	DESCRIZIONE Description	CARATTERISTICHE TECNICHE Technical details	CODICE Reference	APPLICAZIONI /Application list	
				MODELLO / model	ANNI / years
KITA6	KIT IMPIANTO FRENANTE T-MAX 500 braking -assembly kit T-MAX 500	FLANGIA DX + FLANGIA SX / R. flange + L. flange	FL001	YAMAHA T-MAX 500	2008 - 2014
		POMPA FRENO 19X18 FORGIATA, CON LEVA SNODATA 19x18 forged brake master cylinder, with folding lever	CY021		
		TUBI FRENO / brake hoses	AGA0021		
		PINZE FRENO FORGIATE CON PASTIGLIE AGPA137ZXC INCLUSE forged brake calipers with brake pads AGPA137ZXC incuded	PZ007		

CODICE Reference	DESCRIZIONE Description	CARATTERISTICHE TECNICHE Technical details	CODICE Reference	APPLICAZIONI /Application list	
				MODELLO / model	ANNI / years
KITA7	KIT IMPIANTO FRENANTE T-MAX 530 braking -assembly kit T-MAX 530	FLANGIA DX + FLANGIA SX / R. flange + L. flange	FL001	YAMAHA T-MAX 530	2008 - 2014
		POMPA FRENO 19X18 FORGIATA, CON LEVA SNODATA 19x18 forged brake master cylinder, with folding lever	CY021		
		TUBI FRENO / brake hoses	AGA0034		
		PINZE FRENO FORGIATE CON PASTIGLIE AGPA137ZXC INCLUSE forged brake calipers with brake pads AGPA137ZXC incuded	PZ007		

BMW



CODICE Reference	DESCRIZIONE Description	CARATTERISTICHE TECNICHE Technical details		APPLICAZIONI /Application list	
				MODELLO / model	ANNI / years
FL003	FLANGIA FRENO BMW BMW brake flange	STAFFE PER PINZE RADIALI brackets for radial brake calipers	INTERASSE / distance 100 mm	BMW R1200S	2006 - 2007
		COLORE / colour	N ■ NERO / black		
		CONTENUTO CONFEZIONE packaging	FLANGIA DX + FLANGIA SX R. flange + L. flange		

SPIEGAZIONE	Explanation
QUESTO KIT REALIZZATO INTERAMENTE IN CNC PERMETTE LA TRASFORMAZIONE DELLE PINZE FRENO ORIGINALI, DA ASSIALI A RADIALI. **LA MODIFICA DELL'IMPIANTO FRENANTE MIGLIORERÀ LA POTENZA DI FRENATA DELLA VOSTRA MOTO, RENDENDOLA PIÙ DECISA E SICURA.** **IL KIT È COMPATIBILE CON I DISCHI FRENO ORIGINALI; MONTANDO I DISTANZIALI, È POSSIBILE MONTARE DISCHI FRENO MAGGIORATI.**	Utterly CNC-worked, this kit allows to turn original brake calipers form axial into radial. Braking power will definitely inhence in promptness and safety as well. Kit suits oem brake calipers. Furthermore, by assembling wheel spacers, it is also possible to install oversize brake rotors.

STREET RACING

CAVALLETTO ANTERIORE SMONTABILE
front disassembled stand



CODICE Reference	DESCRIZIONE Description	COLORI Colours
AV003	**CAVALLETTO ANTERIORE SMONTABILE** front disassembled stand	**N** **NERO** / black **O** **ARANCIONE** / orange **Y** **ORO** / gold **B** **BLU** / blue **R** **ROSSO** / red **S** **ARGENTO** / silver **G** **VERDE** / green

SPIEGAZIONE	Explanation
IL CAVALLETTO ANTERIORE SMONTABILE ACCOSSATO CONSENTE DI RIDURRE L'INGOMBRO DURANTE IL TRASPORTO. REALIZZATO IN ALLUMINIO, È DISPONIBILE IN DIVERSE COLORAZIONI. IL CAVALLETTO È VENDUTO CON IL SUPPORTO A CONO, CHE LO RENDE ADATTO A TUTTE LE MOTO CHE RICHIEDONO IL SOLLEVAMENTO DA SOTTO GLI STELI DELLA MOTO.	Accossato front decomposable stand allows to reduce volume at minimum to ease carriage at best. Made in aluminium, front part is available in several colors. Stand is supplied with its "cone-shaped" supports. provided with supports, stand width becomes adjustable it could be used on any motorcycles requiring lifting from underneath the fork stem.

CAVALLETTO POSTERIORE SMONTABILE
rear disassembled stand



CODICE Reference	DESCRIZIONE Description	COLORI Colours
AV001	**CAVALLETTO POSTERIORE SMONTABILE CON STAFFA A "L"** rear disassembled stand provided with "L"-shaped bracket	N **NERO** / black O **ARANCIONE** / orange Y **ORO** / gold B **BLU** / blue R **ROSSO** / red S **ARGENTO** / silver G **VERDE** / green
AV002	**CAVALLETTO POSTERIORE SMONTABILE CON STAFFA A "V"** rear disassembled stand provided with "V"-shaped bracket	

SPIEGAZIONE	Explanation
I CAVALLETTI POSTERIORI SMONTABILI ACCOSSATO CONSENTONO DI RIDURRE L'INGOMBRO DURANTE IL TRASPORTO. REALIZZAIO IN ALLUMINIO, SONO DISPONIBILI IN DIVERSE COLORAZIONI. I CAVALLETTI SONO VENDUTI CON IL SUPPORTO IN GOMMA A "L" OPPURE A "V", ADATTI A QUALSIASI MOTO STRADALE O DA TURISMO.	Accossato front decomposable stands allow to reduce volume at minimum to ease carriage at best. Made in aluminium, front parts are available in several colors. Stands are supplied with specific brackets, either "L-shaped" (AV001) or with "V-shaped" (AV002) ones, suitable for any on-road & tourism motorcycles.

STREET RACING

PEDANE TOURING / touring rearsets



CODICE Reference	COLORI Colours
FT102	N **NERO (pedana)** / black (rearset) R **ROSSO (inserto)** / red (insert)

APPLICAZIONI / application list

CC	MODELLO Model	ANNI / years DA From	ANNI / years A To	ANTERIORE DX+SX Front R + L	PASSEGGERO DX+SX Passenger R + L
	DUCATI				
821	HYPERMOTARD	2013	2015	X	X
821	HYPERMOTARD BRASIL	2014	2016	X	X
821	HYPERMOTARD HYPERSTRADA THAILAND	2016	2017	X	X
821	HYPERMOTARD HYPERSTRADA	2013	2015	X	X
821	HYPERMOTARD HYPERSTRADA BRASIL	2014	2016	X	X
821	HYPERMOTARD HYPERSTRADA USA	2013	2015	X	X
821	HYPERMOSTRADA LOW SEAT	2015	2015	X	X
821	HYPERMOTARD SP	2013	2015	X	X
821	HYPERMOTARD SP USA	2013	2015	X	X
821	HYPERMOTARD THAILAND	2015	2015	X	X
821	HYPERMOTARD USA	2013	2014	X	X
1200	MULTISTRADA 1200 ABS BRASIL	2014	2015	X	X
1200	MULTISTRADA 1200 ABS THAILAND	2014	2017	X	X
1200	MULTISTRADA 1200 ABS USA	2010	2017	X	X
1200	MULTISTRADA 1200 ABS	2010	2017	X	X
1200	MULTISTRADA 1200 S ABS USA	2015	2017	X	X
1200	MULTISTRADA 1200 S ABS	2015	2017	X	X
1200	MULTISTRADA 1200 S D-AIR	2016	2017	X	X
1200	MULTISTRADA 1200 S GT USA	2013	2014	X	X

CC	MODELLO Model	ANNI / years DA From	ANNI / years A To	ANTERIORE DX+SX Front R + L	PASSEGGERO DX+SX Passenger R + L
1200	MULTISTRADA 1200 S GT	2013	2014	X	X
1200	MULTISTRADA 1200 S PIKES PEAK BR	2014	2015	X	X
1200	MULTISTRADA 1200 S PIKES PEAK TH	2014	2017	X	X
1200	MULTISTRADA 1200 S PIKES PEAK US	2012	2017	X	X
1200	MULTISTRADA 1200 S PIKES PEAK	2012	2017	X	X
1200	MULTISTRADA 1200 S SPORT USA	2011	2012	X	X
1200	MULTISTRADA 1200 S SPORT	2011	2012	X	X
1200	MULTISTRADA 1200 S TOURING BRASIL	2014	2016	X	X
1200	MULTISTRADA 1200 S TOURING D-AIR	2016	2017	X	X
1200	MULTISTRADA 1200 S TOURING THAILAND	2014	2014	X	X
1200	MULTISTRADA 1200 S TOURING USA	2010	2017	X	X
1200	MULTISTRADA 1200 S TOURING	2010	2017	X	X
1200	MULTISTRADA 1200 TOURING USA	2015	2017	X	X
1200	MULTISTRADA 1200 TOURING	2015	2017	X	X
1200	MULTISTRADA 1200 USA	2010	2012	X	X
1200	MULTISTRADA 1200	2010	2012	X	X

SPIEGAZIONE	Explanation
PEDANE PER MODELLI TOURING, INTERAMENTE REALIZZATE IN ALLUMINIO RICAVATO DAL PIENO. TRATTATE CON ANODIZZAZIONE SUPERFICIALE NERA E CON INSERTO ROSSO. LA DENTELLATURA È SPECIFICAMENTE PROGETTATA PER GARANTIRE UN MAGGIOR GRIP ALLO STIVALE DEL PILOTA.	Rearsets for Touring-bikes CNC-worked aluminium made. Black anodized surface and red insets. Grooved footrests are specifically designed to guarantee the pilot a major grip with the boots.

ACCOSSATO

STREET RACING

PEDANE RACING / racing rearsets



COLORE PEDANA Rearset colour
N **NERO** / black
COLORE INSERTI Insets colour
O **ARANCIONE** / orange
Y **ORO** / gold
B **BLU** / blue
R **ROSSO** / red
G **VERDE** / green

APPLICATIVO / application list

MODELLO Model	CC	ANNI / years		CODICE Reference	CAMBIO / shift		COLORE PEDANA Rearset colour	COLORE INSERTI Insets colour
		DA From	A To		STANDARD	ROVESCIATO reversed		
APRILIA								
RSV4(R/FACTORY)	1000	2009	2011	FT002		x	N	R
RSV4 APRC R ABS	1000	2013	2014	FT095	x	x		
RSV4 APRC R	1000	2011	2012	FT002		x		
RSV4 FACTORY APRC ABS	1000	2013	2014	FT095	x	x		
RSV4 FACTORY APRC STD - SE	1000	2011	2012	FT002		x		
RSV4 RACING FACTORY LE	1000	2015	2016	FT002		x		
RSV4 RR RACER PACK	1000	2015	2015	FT002		x		
RSV4 RR	1000	2015	2015	FT002		x		
BMW								
S1000RR	999	2009	2014	FT003	x	x	N	
S1000RR (racing)	999	2009	2014	FT094	x	x		
S1000RR	999	2015	→	FT052	x	x		
DUCATI								
848 EVO	848 / 850	2011	2013	FT053	x	x	N	R
848 EVO CORSE SE	848 / 850	2012	2013	FT053	x	x		

STREET RACING

PEDANE RACING / racing rearsets

ACCOSSATO

MODELLO Model	CC	ANNI / years		CODICE Reference	CAMBIO / shift		COLORE PEDANA Rearset colour	COLORE INSERTI Insets colour
		DA From	A To		STANDARD	ROVESCIATO reversed		
848	850	2008	2008	FT053	x	x		
848 HAYDEN	850	2010	2010	FT053	x	x		
1098	1100	2007	2008	FT008	x	x		
1098 S	1100	2007	2008	FT008	x	x		
1098 S TRICOLORE	1100	2007	2008	FT008	x	x		
1098 R	1200	2009	2009	FT053	x	x		
1098 R BAYLISS	1200	2009	2009	FT053	x	x		
1198	1200	2009	2011	FT053	x	x		
1198 S	1200	2009	2010	FT053	x	x		
1198 SP	1200	2011	2011	FT053	x	x		
1199PANIGALE	1200	2012	2012	FT007	x	x		
HONDA								
MSX125	125	2013	2016	FT073		x	N	R
CBR250R	250	2011	2013	FT011		x		
CBR600RR	599	2007	2008	FT014	x	x		
CBR1000RR	999	2008	2011	FT074	x	x		
CBR1000RR	999	2004	2007	FT017	x	x		
CBR1000RR	999	2012	2015	FT086	x	x		
KAWASAKI								
NINJA 250R	250	2008	2012	FT021	x	x	N	G
NINJA 300R	300	2013	2015	FT075	x	x		
ZX-6R	600	2009	2014	FT076	x	x		
ZX-6R	600	2014	2016	FT076	x	x		
ZX-6R	600	2007	2008	FT077		x		
ZX-6RR	600	2005	2005	FT078		x		
ZX-636	636	2013	2015	FT076	x	x		
ZX-636-ABS	636	2013	2015	FT076	x	x		
ZX-636	636	2005	2006	FT078		x		
ZX-637	637	2016	2016	FT076	x	x		
ZX-637-ABS	637	2016	2016	FT076	x	x		
Z800	800	2013	2016	FT079		x		
Z800-ABS	800	2013	2016	FT079		x		
Z800-E	800	2013	2016	FT079		x		
Z800-E-ABS	800	2013	2016	FT079		x		
Z800-E-SPECIAL-EDITION	800	2016	2016	FT079		x		
ZX-10R	1000	2004	2005	FT080		x		
ZX-10R	1000	2006	2007	FT081		x		
ZX-10R	1000	2008	2010	FT082	x	x		
ZX-10R	1000	2011	2014	FT027	x	x		
Z1000	1000	2014	2016	FT083		x		
ZX-10R	1000	2015	2016	FT084	x	x		
KTM								
SUPER DUKE R	1290	2014	2016	FT092		x	N	O
MV AGUSTA								
F3(800)	800	2012	2016	FT060		x	N	
SUZUKI								
GSX-R600	600	2006	2010	FT039	x	x	N	Y
GSX-R600	600	2011	2014	FT040	x	x		
SV 650	650	1999	2002	FT090		x		
SV 650 S	650	2015	2015	FT090		x		
GSR750	750	2011	2016	FT091		x		
GSX-R750	750	2006	2010	FT039	x	x		
GSX-S750	750	2015	2016	FT091		x		
GSX-R1000	1000	2005	2006	FT034		x		
GSX-R1000	1000	2007	2008	FT035		x		
GSX-R1000	1000	2009	2016	FT062	x	x		
GSX1300R HAYABUSA	1300	1999	2007	FT061		x		
GSX1300R HAYABUSA	1300	2008	2016	FT037		x		
TRIUMPH								
DAYTONA 675/R	675	2013	2014	FT064	x	x	N	

ACCOSSATO

STREET RACING

PEDANE RACING / racing rearsets

MODELLO Model	CC	ANNI / years		CODICE Reference	CAMBIO / shift		COLORE PEDANA Rearset colour	COLORE INSERTI Insets colour
		DA From	A To		STANDARD	ROVESCIATO reversed		
SPEED TRIPLE 1049	1050	2005	2010	FT093		x		
SPEED TRIPLE 1050	1050	2011	2014	FT063		x		
YAMAHA								
MT-25	125	2015	2016	FT087		x	N	B
YZF-R25/R3	320	2015	2016	FT069	x	x		
YZF-R6	600	2003	2005	FT045		x		
YZF-R6	600	2006	2012	FT046	x	x		
MT-03	660	2015	2016	FT087		x		
FZ-07	700	2014	2016	FT089		x		
MT-07	700	2014	2016	FT089		x		
FZ8	800	2010	2013	FT085		x		
FZ-09	850	2014	2016	FT088		x		
MT-09	850	2014	2016	FT088		x		
FZ1	1000	2006	2016	FT085		x		
YZF-R1	1000	2004	2006	FT066		x		
YZF-R1	1000	2007	2008	FT096	x	x		
YZF-R1	1000	2009	2014	FT067	x	x		
YZF-R1	1000	2015	2016	FT070	x	x		
YZF-R1(racing)	1000	2015	2016	FT071	x	x		



STREET RACING

SERBATOIO OLIO CNC - FRENO
cnc-worked fluid reservoir - brake





CODICE Reference	DESCRIZIONE Description	COLORI STANDARD Standard colours	COLORI PERSONALIZZABILI Customizable colours
FU010	**SERBATOIO OLIO FRENO CNC 25cm3 CON USCITA OLIO ORIZZONTALE** cnc-worked brake fluid reservoir, 25cm3 with horizontal oil spill	**N** **NERO (serbatoio)** black (reseroir) **N** **NERO (tappo)** black (cap)	
FU104	**SERBATOIO OLIO FRENO CNC 25cm3 CON USCITA OLIO VERTICALE** cnc-worked brake fluid reservoir, 25cm3 with vertical oil spill	**N** **NERO (serbatoio)** black (reseroir) **N** **NERO (tappo)** black (cap)	

ACCESSORI / accessories

CODICE Reference	DESCRIZIONE Description
FS002	**STAFFA DI FISSAGGIO DRITTA(FORNITA DI SERIE)** straight bracket (standard equipment)
FS003	**STAFFA DI FISSAGGIO 90°** 90° bracket
FS004	**STAFFA DI FISSAGGIO SPECIFICA PER POMPE FRENO ACCOSSATO** bracket specific for Accossato brake master cylinders

DESCRIZIONE TECNICA	Technical details
SERBATOIO OLIO FRENO IN ALLUMINIO LAVORATO CON MACCHINE UTENSILI A CONTROLLO NUMERICO (CNC). SIA IL SERBATOIO CHE IL TAPPO SONO DISPONIBILI IN 7 VARIANTI DI COLORE OTTENUTE TRAMITE OSSIDAZIONE, CHE PERMETTONO DI ADATTARE IL PRODOTTO ALL'ESTETICA DELLA PROPRIA MOTO. IL SERBATOIO È DISPONIBILE NEL FORMATO DA 25 CM3 PER POMPA FRENO ANTERIORE, CON USCITA OLIO ORIZZONTALE O VERTICALE. IL KIT COMPRENDE: VASCHETTA OLIO, STAFFA DI SUPPORTO DRITTA E RACCORDO D7MM E D8MM.	CNC-worked aluminium brake fluid reservoirs: manufactured with computer numeric control machines.Both fluid reservoir and cap are available in seven colours got by oxidization process. This allows our items to match the easthetics of any motorcycle. Brake fluid reservoir is available in 25cm3 size for front master cylinders, either with horizontal or vertical oil spill. Kit incudes: fluid reservoir, straight metal clamp and D7mm & D8mm-joint.

ACCOSSATO

STREET RACING

SERBATOIO OLIO CNC - FRIZIONE
cnc-worked fluid reservoir - clutch





CODICE Reference	DESCRIZIONE Description	COLORI STANDARD Standard colours	COLORI PERSONALIZZABILI Customizable colours
FU057	**SERBATOIO OLIO FRIZIONE CNC 15cm3 CON USCITA OLIO ORIZZONTALE** cnc-worked clutch fluid reservoir, 15cm3 with horizontal oil spill	**N NERO (serbatoio)** black (reseroir) **N NERO (tappo)** black (cap)	
FU151	**SERBATOIO OLIO FRIZIONE CNC 15cm3 CON USCITA OLIO VERTICALE** cnc-worked clutch fluid reservoir, 15cm3 with vertical oil spill	**N NERO (serbatoio)** black (reseroir) **N NERO (tappo)** black (cap)	

ACCESSORI / accessories

CODICE Reference	DESCRIZIONE Description
FS002	**STAFFA DI FISSAGGIO DRITTA(FORNITA DI SERIE)** straight bracket (standard equipment)
FS003	**STAFFA DI FISSAGGIO 90°** 90° bracket
FS005	**STAFFA DI FISSAGGIO SPECIFICA PER POMPE FRIZIONE ACCOSSATO** bracket specific for Accossato brake master cylinders

DESCRIZIONE TECNICA	Technical details
SERBATOIO OLIO FRIZIONE IN ALLUMINIO LAVORATO CON MACCHINE UTENSILI A CONTROLLO NUMERICO (CNC). SIA IL SERBATOIO CHE IL TAPPO SONO DISPONIBILI IN 7 VARIANTI DI COLORE OTTENUTE TRAMITE OSSIDAZIONE, CHE PERMETTONO DI ADATTARE IL PRODOTTO ALL'ESTETICA DELLA PROPRIA MOTO. IL SERBATOIO È DISPONIBILE NEL FORMATO DA 15 CM3 PER POMPA FRENO POSTERIORE O POMPA FRIZIONE, CON USCITA OLIO ORIZZONTALE O VERTICALE. IL KIT COMPRENDE: VASCHETTA OLIO, STAFFA DI SUPPORTO DRITTA E RACCORDO D7MM E D8MM.	CNC-worked aluminium clutch fluid reservoirs: manufactured with computer numeric control machines.Both fluid reservoir and cap are available in seven colours got by oxidization process. This allows our items to match the easthetics of any motorcycle. Clutch fluid reservoir is available in 15cm3 size, either for rear brake master cylinders or clutch ones, provided with either horizontal or vertical oil spill. Kit incudes: fluid reservoir, straight metal clamp and D7mm & D8mm-joint.

STREET RACING

TAPPO VASCHETTE CNC / cnc-worked fluid reservoir cap



CODICE Reference	DESCRIZIONE Description	COLORI Colours
TS001	**TAPPO VASCHETTA OLIO FRENO, LAVORATO CNC PER VASCHETTE ACCOSSATO, 30ML (VG001)** brake fluid-reservoir cap, cnc-worked suitable for Accossato 30ml-reservoir (VG001)	**N** **NERO** / black **O** **ARANCIONE** / orange **Y** **ORO** / gold **B** **BLU** / blue **R** **ROSSO** / red **S** **ARGENTO** / silver **G** **VERDE** / green
TS002	**TAPPO VASCHETTA OLIO FRIZIONE, LAVORATO CNC PER VASCHETTE ACCOSSATO, 15ML (VP001)** clutch fluid-reservoir cap, cnc-worked suitable for Accossato 15ml-reservoir (VP001)	

TAPPO VASCHETTA OLIO FRENO ANTERIORE
oil front brake fluid reservoir



COLORI Colours	
N	**NERO** / black
O	**ARANCIONE** / orange
Y	**ORO** / gold
B	**BLU** / blue
R	**ROSSO** / red
S	**ARGENTO** / silver
G	**VERDE** / green

APPLICATIVO / application list

MARCA Brand	CC	MODELLO Model	ANNI / years DA From	A To	CODICE Reference
APRILIA	750	DORSODURO750	2008	2012	TS004
	750	SHIVER	2007	2016	TS004
	750	SHIVER 750 GT	2009	2009	TS004
	750	DORSODURO750	2008	2012	TS004
	1200	DORSODURO	2010	2015	TS003
		RSV4	2009	2012	TS003
BMW	1000	S1000RR	2009	2012	TS005
	1000	S1000R	2012	2015	TS005
	1000	S1000RR	2015	2015	TS005
CAGIVA	-	RAPTOR			TS005
DUCATI	600	Monster	1993	2001	TS007
	748	Ducati 748	1995	2001	TS003
	821	HYPERMOTARD	2013	2015	TS003
	848	Ducati 848	2008	2010	TS003
	916	Ducati 916	1994	1997	TS003
	996	Ducati 996	1999	2001	TS003
	998	Ducati 998	2002	2003	TS003
	1100	HYPERMOTARD	2008	2009	TS003
	1198	Ducati 1198	2009	2011	TS003
	1200	MULTISTRADA	2015	2015	TS003
	1200	MULTISTRADA 1200 S			TS003
	1098	Ducati 1098	2007	2008	TS003
		DIAVEL	2012		TS003
HONDA	600	CBR600RR	2007	2012	TS005
	1000	CB1000R	2008	2012	TS005
	1000	CBR1000RR	2006	2012	TS005
KTM		RC8	2008	2012	TS003
	990	SUPER DUKE	2007	2009	TS003
KAWASAKI	750	Z750	2007	2010	TS005
	1000	Z1000	2007	2010	TS005
		ZX-10R	2004	2011	TS005
		ZX-6R	2004	2012	TS005
SUZUKI	600	GSX-R600	2004	2012	TS005
	600	GSR			TS009
	650	SV650S			TS005
	650	Gladius	2009	2012	TS009
	1000	GSX-R1000	2005	2012	TS005
TRIUMPH	675	STREETTRIPLE	2007	2012	TS005
	1050	SPEED TRIPLE	2011	2012	TS003
YAMAHA	530	TMAX	2012	2015	TS010
		TMAX	2001	2012	TS010
		MT-07	2014		TS011
		MT-09	2013	2014	TS011
		R1	2015	2015	TS005
		YZF-R1	1998	2012	TS005
		YZF-R6	2003	2012	TS005

TAPPO VASCHETTA OLIO FRENO POSTERIORE
oil rear brake fluid reservoir



APPLICATIVO / application list

MARCA Brand	CC	MODELLO Model	ANNI / years DA From	A To	CODICE Reference
APRILIA	750	DORSODURO	2008	2012	TS013
	750	SHIVER	2007	2012	TS013
	750	SHIVER 750GT	2007	2012	TS013
	1200	DORSODURO 1200	2010	2015	TS012
DUCATI	696	MONSTER	2008	2010	TS012
	748	748	1995	2001	TS012
	848	848	2008	2010	TS012
	916	916	1994	1997	TS012
	996	996	1999	2001	TS012
	998	998	2002	2003	TS012
	1098	1098	2008	2009	TS012
	1100	HYPERMOTARD	2009	2011	TS012
	1198	1198	2015	2015	TS012
	1200	MULTISTRADA 1200S			TS012
		DIAVEL	2012		TS012
		MONSTER S4R	2007	2010	TS012
		STREETFIGHTER	2009	2010	TS012
KAWASAKI	300	NINJA	2013	2014	TS013
	750	Z750	2007	2012	TS013
	1000	Z1000	2007	2015	TS013
		ZX-10R	2007	2012	TS013
		ZX-6R	2007	2012	TS013
KTM	690	690SM	2007	2010	TS012
	690	690SMR	2007	2010	TS012
	990	SUPERDUKE 990	2007	2010	TS012
YAMAHA		MT-03	2006	2010	TS013
		MT-07	2014		TS013
		MT-09	2013	2014	TS013
		YZF-R6	2006	2012	TS013

STREET RACING

TAPPI OLIO / oil filter plug



COLORI
Colours

N	**NERO** / black
O	**ARANCIONE** / orange
Y	**ORO** / gold
B	**BLU** / blue
R	**ROSSO** / red
S	**ARGENTO** / silver
G	**VERDE** / green
T	**TITANIO** / titanium

APPLICAZIONI / application list

MARCA Brand	CC	MODELLO Model	CODICE Reference	FILETTATURA Screw pitch
APRILIA	250	RS 250	FP001	M20 X 1,5
	750	DORSODURO750	FP009	
	750	SHIVER750	FP009	
	750	SHIVER750GT	FP009	
	1000	RSV 1000	FP001	M20 X 1,5
	1000	SL FALCO 1000	FP001	M20 X 1,5
	1200	DORSODURO1200	FP009	
		TUONO	FP001	M20 X 1,5
		RSV4	FP009	
		TUONOV4	FP009	
BMW	1000	S 1000 RR	FP002	
	1000	S 1000 R (2012 - 2015)	FP002	
	1000	S 1000 RR (2015)	FP002	
DUCATI	600	MONSTER 600	FP003	M22 X 1,5
	620	MONSTER 620	FP003	M22 X 1,5
	696	MONSTER 696	FP004	M20 X 2,5
	748	Ducati 748	FP003	M22 X 1,5
	749	Ducati 749	FP003	M22 X 1,5
	750	MONSTER 750	FP003	M22 X 1,5
	750	SUPERSPORT 750 SS	FP003	M22 X 1,5
	796	HYPER MOTARD 796	FP004	M20 X 2,5
	821	HYPER MOTARD 821 (2013-2015)	FP004	M20 X 2,5
	848	Ducati 848	FP004	M20 X 2,5
	900	MONSTER 900	FP003	M22 X 1,5
	900	SUPERSPORT 900 SS	FP003	M22 X 1,5
	916	Ducati 916	FP003	M22 X 1,5
	996	Ducati 996	FP003	M22 X 1,5
	998	Ducati 998	FP003	M22 X 1,5
	999	Ducati 999	FP003	M22 X 1,5
	1000	Ducati 1000	FP003	M22 X 1,5
	1098	Ducatl 1098	FP003	M22 X 1,5
	1100	HYPERMOTARD 1100	FP003	M22 X 1,5
	1100	HYPERMOTARD 1100 EVO	FP003	M22 X 1,5
	1198	Ducati 1198	FP003	M22 X 1,5
	1199	1199PANIGALE	FP004	M20 X 2,5
	1200	MULTISTRADA 1200 2015)	FP004	M20 X 2,5
		MONSTER S2R	FP003	M22 X 1,5
		MONSTER S4R	FP003	M22 X 1,5
		STREET FIGHTER	FP003	M22 X 1,5
		SCRAMBLER	FP004	M20 X 2,5
HONDA	250	CBR250R (2011-2014)	FP004	M20 X 2,5
	600	CBR600F	FP004	M20 X 2,5
	600	CBR600RR	FP004	M20 X 2,5
	800	VFR800	FP004	M20 X 2,5
	900	CBR900RR	FP004	M20 X 2,5
	900	HORNET 900	FP004	M20 X 2,5
	929	CBR929RR	FP004	M20 X 2,5
	954	CBR954RR	FP004	M20 X 2,5
	1000	CB1000R	FP004	M20 X 2,5

MARCA Brand	CC	MODELLO Model	CODICE Reference	FILETTATURA Screw pitch
	1000	CBR1000RR	FP004	M20 X 2,5
	1000	VTR 1000 SP1	FP004	M20 X 2,5
	1000	VTR 1000 SP2	FP004	M20 X 2,5
	1000	VTR 1000 F	FP004	M20 X 2,5
KAWASAKI	250	NINJA 250R	FP005	M30 X 1,5
	300	NINJA 300	FP005	M30 X 1,5
	400	ZXR400	FP005	M30 X 1,5
	750	Z750	FP005	M30 X 1,5
	1000	Z1000 (2011 - 2015)	FP004	M20 X 2,5
	1000	Z1000 (2006 - 2010)	FP005	M30 X 1,5
		ER-6N	FP004	M20 X 2,5
		ZX-10R	FP005	M30 X 1,5
		ZX-12R	FP005	M30 X 1,5
		ZX-6R	FP005	M30 X 1,5
		ZX-6RR	FP005	M30 X 1,5
		ZX-7R	FP005	M30 X 1,5
		ZX-9R	FP005	M30 X 1,5
MV AGUSTA		F4	FP009	
		ALL MODELS	FP010	
SUZUKI		ALL MODELS	FP001	M20 X 1,5
TRIUMPH	675	DAYTONA 675R (2014)	FP004	M20 X 2,5
	675	STREET TRIPLE 675	FP004	M20 X 2,5
	955	DAYTONA 955 IE	FP004	M20 X 2,5
	955	SPEED TRIPLE 955	FP004	M20 X 2,5
	1050	SPEED TRIPLE 1050	FP004	M20 X 2,5
YAMAHA	530	TMAX 530	FP004	M20 X 2,5
	600	FAZER 600	FP006	M26 X 3
	600	YZF 600	FP006	M26 X 3
	750	YZF 750 R	FP006	M26 X 3
	750	YZF 750 SP	FP006	M26 X 3
	900	TDM 900	FP006	M26 X 3
	1000	FAZER 1000	FP006	M26 X 3
	1000	FZR 1000	FP006	M26 X 3
	1000	THUNDERACE 1000	FP006	M26 X 3
	1000	YZF 1000	FP006	M26 X 3
		MT-03	FP004	M20 X 2,5
		MT-09 (2013 - 2014)	FP004	M20 X 2,5
		TMAX	FP004	M20 X 2,5
		XJ6	FP004	M20 X 2,5
		FZ1	FP006	M26 X 3
		FZ1 FAZER	FP006	M26 X 3
		FZ6	FP006	M26 X 3
		FZ8	FP006	M26 X 3
		MT-07 (2014)	FP006	M26 X 3
		R1 (2015)	FP006	M26 X 3
		YZF-R1	FP006	M26 X 3
		YZF-R6	FP006	M26 X 3
		YZF-R7	FP006	M26 X 3

COPERCHIO POMPA FRIZIONE / clutch master cylinder cover



APPLICATIVO / application list

CC	MODELLO Model	ANNI / years DA From	A To	CODICE Reference
	APRILIA			
1200	DORSODURO	2010	2015	FP007
	DUCATI			
748	Ducati 748	1995	2001	FP007
821	HYPERMOTARD 821	2013	2015	FP007
848	Ducati 848	2008	2010	FP007
916	Ducati 916	1994	1997	FP007
996	Ducati 996	1999	2001	FP007
998	Ducati 998	2002	2003	FP007
1098	Ducati 1098	2007	2008	FP007
1100	HYPERMOTARD 1100	2008	2009	FP007
1198	Ducati 1198	2009	2011	FP007
1200	MULTISTRADA 1200	2015	2015	FP007
	DIAVEL	2012		FP007
	MONSTER S4R	2007	2010	FP007
	HONDA			
1000	CB1000R	2008	2012	FP008
1000	CBR1000RR	2008	2013	FP008
	KTM			
690	690 SM	2007	2010	FP007
690	690 SMR	2007	2010	FP007
990	SUPERDUKE 990	2007	2010	FP007
	SUZUKI			
1000	GSX-R1000	2007	2008	FP008

COLORI Colours	
N	**NERO** / black
O	**ARANCIONE** / orange
Y	**ORO** / gold
B	**BLU** / blue
R	**ROSSO** / red
S	**ARGENTO** / silver

STREET RACING

TAPPI SERBATOIO / fuel-caps



COLORI (asola nottolino gruppo chiusura) Colours (closing-nut flap)	
N	**NERO** / black
Y	**ORO** / gold
B	**BLU** / blue
R	**ROSSO** / red
S	**ARGENTO** / silver

DESCRIZIONE	Description
IL TAPPO SERBATOIO RAPIDO ACCOSSATO RACING PER LE SUE CARATTERISTICHE DI PRATICITA' E LEGGEREZZA TROVA IMPIEGO NELLE MOTO DA COMPETIZIONE.	The Accossato racing quick-action fuel cap, is used for motorcycle competitions, thanks to its practicalness and lightness.

PRINCIPALI CARATTERISTICHE	Key features
• **INTERCAMBIABILI AGLI ORIGINALI** • **DISPONIBILI PER TUTTI I MODELLI STRADALI** • **FORNITI COMPLETI, PER SOSTITUIRE QUELLO DI SERIE** • **ANODIZZATO IN 5 VARIANTI COLORE: NERO, ORO, ROSSO, BLU, ARGENTO** • **ESTREMAMENTE SEMPLICI DA SOSTITUIRE** • **PESO: -70% RISPETTO ALL'ORIGINALE**	• It is interchangeable with the original fuel cap • For every street model • Supplied with everything you need for the substitution of the original one • Anodized and available in five different colors: black, gold, red, blue and silver • Easy replacement • weight: less 70% than oem

CHIUSURA RAPIDA / quick action

APPLICAZIONI / application list

MODELLO Model	ANNI / years DA From	A To	CODICE Reference
APRILIA			
RS 125 / RS4 - 6 HOLES	1992	2010	FC001
RS 250 - 6 HOLES	1995	2003	FC001
RSV 1000	2003		FC001
TUONO	2003	2004	FC001
RSV 1000 R / FACTORY	2004	2008	FC002
TUONO / V4 / RR / 1100	2005	2017	FC002
RSV4 R / RR / RF / FACTORY / 1100	2009	2017	FC002
BMW			
R NINE T Scrambler	2015	2016	FC003
R 1200 GS	2010	2016	FC003
S 1000RR / HP4	2010	2017	FC003
S1000R Naked	2014	2017	FC003
DUCATI			
DIAVEL / X DIAVEL	2011	2013	FC005
HYPERMOTARD - All Models	2008	2017	FC008
MONSTER - All Models	1993	2007	FC004
MONSTER 696 / 796 / 1100 / EVO			FC005
MOSTER 821 / 1200 / S			FC004
MULTISTRADA			FC006
MULTISTRADA 1200- All Models	2010	2017	FC007
GT 1000 / SPORT 1000	2008	2010	FC006
748 / 916 / 996 / 998	1995	2001	FC004
749 / 999	2003	2006	FC006
848 / 1098 / 1198	2008	2010	FC004
PANIGALE 899 / 959 / 1199 / 1299 / R	2014	2015	FC005
STREETFIGHTER / 848	2012	2014	FC005
SCRAMBLER - All Models	2015	2017	FC005
HONDA			
CBR 600 F			FC009
CBR 600 RR	2003	2016	FC009
CBR 900 RR			FC009
CBR 1000 RR	2004	2013	FC009
CBR 1000 RR / SP	2014-16		FC010
CBR 1000 R / CB 1300 S			FC009
HORNET 600		2002	FC009
HORNET 900			FC009
KAWASAKI			
ZX-6R / ZX-9R	1995	2016	FC011
ZX-7R	1998	2016	FC012
ZX-6R / 636 / ZX-9R	2000	2006	FC012
VERSYS / ER-6	2006	2016	FC013
Z 750	2004	2006	FC012
Z 1000	2003	2006	FC012
ZX-10R	2004	2005	FC012
ZX-10R	2006	2016	FC013
ZX-6R	2007	2016	FC013
Z 750 / R	2007	2016	FC013

MODELLO Model	ANNI / years DA From	A To	CODICE Reference
Z 1000 / SX	2007	2016	FC013
ZZR-1200	2002	2005	FC012
ZZR-1400	2006	2017	FC013
NINJA H2	2016		FC013
KTM			
RC 125 / 200 / 390	2015	2016	FC017
DUKE 125 / 200 / 390	2015	2016	FC017
DUKE 690 / R	2013	2016	FC014
SUPER DUKE 990	2005	2013	FC014
RC8 / R	2008	2015	FC015
1290 SUPER DUKE R	2014	2016	FC016
MV AGUSTA			
BRUTALE	1997	2009	FC014
F4	1997	2009	FC014
BRUTALE	2010	2016	FC015
F4	2010	2016	FC015
BRUTALE 675 / 800 / 1090	2012	2016	FC016
BRUTALE DRAGSTER 800	2014	2016	FC016
F3 675 / 800	2012	2016	FC016
RIVALE 800	2014	2016	FC016
SUZUKI			
SV 650	1999	2002	FC021
SV 650	2003	2016	FC022
SV 1000	2003	2015	FC022
GSX-R 600 / 750	1996	2003	FC021
GSX-R 600 / 750	2004	2016	FC022
GSX-R 1000	2001	2002	FC021
GSX-R 1000	2003	2016	FC022
GSX-S 750	2015	2016	FC022
BANDIT	1996	2005	FC021
BANDIT	2006	2016	FC022
HAYABUSA	1999	2007	FC021
HAYABUSA	2008	2016	FC022
GLADIUS	2009	2015	FC022
TRIUMPH			
DAYTONA 675 - All Models			FC023
SPEED TRIPLE - All Models			FC023
STREET TRIPLE - All Models			FC023
TIGER - All Models			FC023
YAMAHA			
YZF-R3	2015	2015	FC024
YZF-R6	1999	2016	FC024
FZ 6 / Fazer	2004	2016	FC024
FZR-750	2006	2016	FC024
YZF-R1	1998	2016	FC024
FZ 1 / FZ 8 / Fazer	2006	2009	FC024
XJR 1200 / 1300	1995	2016	FC024
MT-03 / MT-07 / MT-09	2006	2012	FC024

RICAMBIO / spare part

CODICE Reference	DESCRIZIONE Description	COLORI Colours
GC001	**NOTTOLINO GRUPPO CHIUSURA TAPPO SERBATOIO RAPIDO** closing nut for quick-action fuel caps	N **NERO** / black Y **ORO** / gold B **BLU** / blue R **ROSSO** / red S **ARGENTO** / silver

STREET RACING

ACCOSSATO

TAPPI SERBATOIO A CHIAVE / lockable fuel caps

CHIUSURA A CHIAVE / lockable

COLORI Colours
N ■ NERO / black

APPLICAZIONI / application list

MODELLO Model	ANNI / years DA From	A To	CODICE Reference
APRILIA			
RS 125 / RS 250 - 6 holes			FK01
RSV 1000	2003		FK01
TUONO	2003	2004	FK01
RSV 1000 R/ FACTORY	2004		FK02
TUONO 2005 →	2005	2016	FK02
TUONO V4	2011	2016	FK02
RSV4/ FACTORY	2009	2016	FK02
BMW			
R NINE T Scrambler	2015	2016	FK03
R1200 GS	2010	2016	FK03
S1000RR / HP4	2010	2016	FK03
S1000R Naked	2014	2016	FK03
DUCATI			
MONSTER- all models	1993	2007	FK04
MONSTER 696/796/1100/EVO			FK05
MONSTER 821 / 1200 / S			FK04
748 / 916 / 996 / 998	1995	2001	FK04
749 / 999	2003	2006	FK06
MULTISTRADA			FK06
MULTISTRADA 1200- all models	2010	2017	FK07
GT 1000 / SPORT 1000	2008	2010	FK06
848/1098/1198	2008	2010	FK04
STREETFIGHTER/848	2012	2014	FK05
DIAVEL/ X DIAVEL	2011	2013	FK05
SCRAMBLER- all models	2015	2017	FK05
Panigale 899/959/1199/1299	2014	2015	FK05
HONDA			
CBR 600 F			FK08
CBR 600 RR	2013	2016	FK08
CBR 900 RR			FK08
CBR 1000 RR	2004	2013	FK08
CBR 1000 RR SP	2014		FK09
	2016		
CB 1000 R / CB 1300 S			FK08
HORNET 600	2002		FK08
HORNET 900			FK08
VTR 1000 SP-1 / SP-2			FK08
KAWASAKI			
ZX-6R / ZX-9R			FK010
ZX-7R	1998	2016	FK010
ZX-6R / 636 / ZX-9R	2000	2006	FK011
VERSYS / ER-6	2006	2016	FK012
Z 750	2004	2006	FK011
Z 1000	2003	2006	FK011
ZX-10R	2004	2005	FK011
ZX-10R	2006	2016	FK012
ZX-6R	2007	2016	FK012

MODELLO Model	ANNI / years DA From	A To	CODICE Reference
Z 750 / R	2007	2016	FK012
Z 1000 / SX	2007	2016	FK012
ZZR-1200			FK011
ZZR-1400			FK012
NINJA H2	2016		FK012
KTM			
SUPER DUKE 990	2005	2013	FK014
RC8/R	2008	2015	FK015
1290 SUPER DUKE R	2014	2016	FK016
RC 125/200/390	2015	2016	FK013
DUKE 125/200/390	2015	2016	FK013
DUKE 690/R	2013	2016	FK014
MV AGUSTA			
BRUTALE	1997	2009	FK017
F4	1997	2009	FK017
BRUTALE	2010	2016	FK018
F4	2010	2016	FK018
BRUTALE 675 / 800 / 1090	2012	2016	FK019
BRUTALE 800 DRAGSTER	2014	2016	FK019
F3 675 / 800	2012	2016	FK019
RIVALE 800	2014	2016	FK019
SUZUKI			
SV 650	1999	2002	FK020
SV 650	2003	2016	FK021
SV 1000	2003	2015	FK021
GSX-R 600 /750	1996	2003	FK020
GSX-R 750/600	2004	2016	FK021
GSX-R 1000	2001	2002	FK020
BANDIT	1996	2005	FK020
HAYABUSA	1999	2007	FK020
GSX-R 1000	2003	2016	FK021
GSX-S 750 2004 →	2015	2016	FK021
GLADIUS	2009	2015	FK021
BANDIT	2006	2016	FK021
HAYABUSA	2008	2016	FK021
TRIUMPH			
SPEED TRIPLE- All models			FK022
TIGER- All models			FK022
DAYTONA 675			FK022
STREET TRIPLE- All models			FK022
YAMAHA			
YZF R6	1999	2016	FK023
FZ 6 / Fazer	2004	2016	FK023
FZR 750	2006	2016	FK023
YZF R1	1998	2016	FK023
FZ 1 / FZ 8 / Fazer	2006	2009	FK023
XJR 1200/1300	1995	2016	FK023
YZF R3	2015	2016	FK023

TAPPI SERBATOIO A VITE / screw-in fuel caps

CHIUSURA A VITE / screw-in

COLORI Colours
N ■ NERO / black

APPLICAZIONI / application list

MODELLO Model	ANNI / years DA From	A To	CODICE Reference
APRILIA			
RS 125 / RS 250 - 6 holes			FW01
RSV 1000	2003		FW01
TUONO	2003	2004	FW01
RSV 1000 R/ FACTORY	2004		FW02
TUONO	2005	2016	FW02
TUONO V4	2011	2016	FW02
RSV4/ FACTORY	2009	2016	FW02
BMW			
R NINE T Scrambler	2015	2016	FW03
R 1200 GS	2010	2016	FW03
S1000R Naked	2014	2016	FW03
S1000RR / HP4	2010	2016	FW03
DUCATI			
MONSTER	1993	2007	FW04
MONSTER 696/796/1100/EVO			FW05
MONSTER 821 / 1200 / S			FW04
748 / 916 / 996 / 998	1995	2001	FW04
749 / 999	2003	2006	FW06
MULTISTRADA			FW06
GT 1000 / SPORT 1000	2008	2010	FW06
848/1098/1198	2008	2010	FW04
STREETFIGHTER/848	2012	2014	FW05
DIAVEL/X DIAVEL	2011	2013	FW05
SCRAMBLER	2015	2017	FW05
Panigale 899/959/1199/1299	2014	2015	FW05
HONDA			
CBR 600 F			FW07
CBR 600 RR	2003	2016	FW07
CBR 900 RR			FW07
CBR 1000 RR	2004	2013	FW07
CBR 1000 RR SP	2014		FW08
	2016		
CB 1000 R / CB 1300 S			FW07
HORNET 600	2002		FW07
HORNET 900			FW07
VTR 1000 SP-1 / SP-2			FW07
KAWASAKI			
ZX-6R / ZX-9R			FW09
ZX-7R	1998	2016	FW09
ZX-6R / 636 / ZX-9R	2000	2006	FW010
VERSYS / ER-6	2006	2016	FW011
Z 750	2004	2006	FW010
Z 1000	2003	2006	FW010
ZX-10R	2004	2005	FW010

MODELLO Model	ANNI / years DA From	A To	CODICE Reference
ZX-10R	2006	2016	FW011
ZX-6R	2007	2016	FW011
Z 750 / R	2007	2016	FW011
Z 1000 / SX	2007	2016	FW011
ZZR-1200			FW010
ZZR-1400			FW011
NINJA H2	2016		FW011
KTM			
SUPER DUKE 990	2005	2013	FW013
RC8/R	2008	2015	FW014
DUKE 125/200/390	2015	2016	FW012
RC 125/200/390	2015	2016	FW012
DUKE 690/R	2013	2016	FW013
MV AGUSTA			
BRUTALE	1997	2009	FW015
F4	1997	2009	FW015
BRUTALE	2010	2016	FW016
F4	2010	2016	FW016
BRUTALE 675 / 800 / 1090	2012	2016	FW017
BRUTALE 800 DRAGSTER	2014	2016	FW017
F3 675 / 800	2012	2016	FW017
RIVALE 800	2014	2016	FW017
SUZUKI			
SV 1000	2003	2015	FW018
GSX-R 1000	2003	2016	FW018
BANDIT	2006	2016	FW018
HAYABUSA	1999	2007	FW019
SV 650 2003 →	2003	2016	FW018
GSX-R 600/750	2004	2016	FW018
GLADIUS	2009	2015	FW018
HAYABUSA 2007 →	2008	2016	FW018
TRIUMPH			
SPEED TRIPLE- All models			FW020
TIGER- All models			FW020
DAYTONA 675- All models			FW020
STREET TRIPLE- All models			FW020
YAMAHA			
YZF R6	1999	2016	FW021
FZ 6 / Fazer	2004	2016	FW021
FZR 750	2006	2016	FW021
YZF R1	1998	2016	FW021
FZ 1 / FZ 8 / Fazer	2006	2009	FW021
XJR 1200/1300	1995	2016	FW021
YZF R3	2015	2016	FW021

STREET RACING

TAMPONI PARACARENA / crash pads



COLORI / Colours

N	**NERO** / black
Y	**ORO** / gold
B	**BLU** / blue
R	**ROSSO** / red
S	**ARGENTO** / silver
G	**VERDE** / green

APPLICAZIONI / application list

CC	MODELLO Model	ANNI / years DA From	A To	CODICE Reference	LATO CARENA DA FORARE fairings side to drill SX	DX
APRILIA						
750	SHIVER 750			TP052		
750	SHIVER 750 GT			TP052		
	TUONO	2006	2008	TP045	X	X
	RSV4	2009	2012	TP058	X	X
BMW						
1000	S 1000 RR	2009	2012	TP060		
1000	SS1000RR	2015	2015	TP066		
DUCATI						
600	MONSTER	2001	2007	TP050		
696	MONSTER 696	2008	2012	TP046		
796	HYPERMOTARD 796	2007	2012	TP052		

CC	MODELLO Model	ANNI / years DA From	A To	CODICE Reference	LATO CARENA DA FORARE fairings side to drill SX	DX
796	796	2003	2005	TP055	X	X
796	796	2008	2012	TP046		
821	HYPERMOTARD	2013	2015	TP067		
848	848	2007	2008	TP056		
900	MONSTER S2R	2001	2007	TP050		
999	999	2003	2005	TP055	X	X
1000	1000	2001	2007	TP050		
1000	1000	2001	2007	TP050		
1098	1098	2007	2008	TP056		
1100	HYPERMOTARD 1100	2007	2012	TP052		
1100	HYPERMOTARD 1100 EVO	2007	2012	TP052		

TAMPONI PARACARENA / crash pads

CC	MODELLO Model	ANNI / years DA From	A To	CODICE Reference	LATO CARENA DA FORARE fairings side to drill SX	DX
	STREET FIGHTER	2008	2012	TP044		
	HONDA					
600	CBR 600 RR	2004	2012	TP003	X	X
600	HORNET	1998	2006	TP011		
600	HORNET	2007	2008	TP013		
900	CBR900RR	2002	2003	TP020	X	X
929	CBR929RR	2001	2002	TP020	X	
1000	CBR1000RR	2008	2012	TP047	X	X
1000	CB1000R	2008	2012	TP015		
	KAWASAKI					
300	NINJA	2013	2014	TP065		
600	ZX-6R	2003	2006	TP002	X	
600	ZX-6RR	2003	2006	TP002	X	
600	ZX-6R	2007	2008	TP022		
600	ZX-6RR	2007	2008	TP022		
600	ZX-6R	2009	2012	TP023	X	X
750	Z750	2004	2006	TP007		
750	Z750	2007	2010	TP021		
1000	ZX-10R	2008	2010	TP048	X	X
1000	ZX-10R	2008	2010	TP042		
1000	Z1000	2007	2010	TP021		
1000	Z1000	2011	2012	TP041		
	MORINI					
1200	CORSARO	2007	2009	TP046		
	MV AGUSTA					
800	MV RIVALE	2015	2015	TP026		
910	BRUTALE			TP001		
	F3	2012	2013	TP062		
	SUZUKI					
600	GSX-R600	2004	2005	TP020		

CC	MODELLO Model	ANNI / years DA From	A To	CODICE Reference	LATO CARENA DA FORARE fairings side to drill SX	DX
600	GSX-R600	2006	2015	TP006	X	
600	GSR 600	2006	2012	TP016		
650	GLADIUS	2009	2010	TP054		
750	GSX-R750	2004	2005	TP020		
750	GSX-R750	2006	2015	TP006		
750	GSR 750	2012	2013	TP024		
1000	GSX-R1000	2007	2008	TP020		
1000	GSX-R1000	2005	2006	TP017	X	X
1000	GSX-R1000	2009	2015	TP061	X	X
	TRIUMPH					
675	DAYTONA	2006	2012	TP009		
675	STREET TRIPLE	2007	2012	TP053		
1050	SPEED TRIPLE	2005	2010	TP010		
1050	SPEED TRIPLE	2011	2012	TP043		
	BONNEVILLE	2007	2012	TP049		
	YAMAHA					
530	TMAX 530	2006	2012	TP012		
600	FZ6 (ALL MODELS)			TP005		
600	XJ6	2009	2012	TP057		
600	YZF-R6	2003	2005	TP008		X
600	YZF-R6	2006	2012	TP004	X	
600	YZF-R6	2006	2012	TP059		
689	MT-07	2014		TP064		
800	FZ8	2010	2012	TP012		
847	MT-09	2013	2014	TP063		
1000	R1	2015	2015	TP025		
1000	YZF-R1	1998	2003	TP014		
1000	YZF-R1	2004	2006	TP018		
1000	YZF-R1	2007	2008	TP019	X	X
1000	YZF-R1	2009	2012	TP051	X	X

TAMPONI PARACARENA CON OPZIONE TAPPO COPRI VITE *
crash pads with screw cover *





*** STESSE APPLICAZIONI TAMPONI STANDARD** / same applications as standard crash pads

STREET RACING

TAPPI SPECCHIETTI / mirror covers



COLORI Colours	
N	NERO / black
Y	ORO / gold
B	BLU / blue
R	ROSSO / red
S	ARGENTO / silver
G	VERDE / green
T	TITANIO / titanium

APPLICAZIONI / application list

MODELLO Model	ANNI / years DA From	A To	CODICE Reference
APRILIA			
RSV4	2009	2015	MC001
BMW			
S 1000 RR	2009	2014	MC002
S 1000 RR	2015		MC009
BUELL			
X8BR			MC002
B9R 1000			MC002
HONDA			
CBR600RR	2003	2015	MC003
CBR1000RR	2003	2007	MC003
CBR1000RR	2008	2015	MC004
VTR SP1/SP2	2001	2005	MC003
CBR600F	1999	2006	MC003
CBR929RR	2001	2002	MC003
CBR954RR	2003	2004	MC003
VFR800		2007	MC003
HORNET 600 S	1998	2006	MC003
CBR 250 R	2011	2014	MC003
KAWASAKI			
ZX-6R	2003	2004	MC002
ZX-6R	2005	2006	MC003
ZX6-R	2009	2015	MC005
ZX-9R			MC002
ZX-10R	2005		MC003
ZX-10R	2011	2015	MC005

MODELLO Model	ANNI / years DA From	A To	CODICE Reference
MOTO GUZZI			
V11 SEMI FAIRING			MC002
V11 LE MANS CORSA			MC002
MV AGUSTA			
F3	2012	2015	MC003
SUZUKI			
GSX-R600/750/1000	2001	2015	MC006
GSX-R1300	1999	2009	MC006
SV650S	2000	2006	MC006
SV1000S	2003	2006	MC006
TRIUMPH			
DAYTONA 675R	2014	2015	MC007
YAMAHA			
YZF-R6	1999	2013	MC002
YZF-R1	1998	2013	MC002
YZF-R1	2015		MC009
FZ6			MC002
FZ1			MC002
YZF-R125	2008	2014	MC002
TMAX 530	2012	2015	MC008

ACCOSSATO

STREET RACING

GHIERA DI STERZO APERTA / open steering nut

COLORI GHIERE APERTE E CHIUSE
Colours for open and close steering nuts

- N **NERO** / black
- Y **ORO** / gold
- B **BLU** / blue
- R **ROSSO** / red
- S **ARGENTO** / silver
- G **VERDE** / green
- T **TITANIO** / titanium



APPLICAZIONI / application list

CC	MODELLO Model	ANNI / years DA From	A To	CODICE Reference	FILETTATURA Screw pitch
BMW					
1000	S1000RR	2009	2012	SA001	M28 X 1
HONDA					
250	CBR250R	2011	2014	SA005	M24 X 1
600	CBR600RR	2003	2012	SA005	M24 X 1
600	HORNET600	2003	2009	SA005	M24 X 1
900	CBR900RR	2002	2003	SA005	M24 X 1
900	HORNET900	2002	2009	SA005	M24 X 1
1000	CB1000R	2008	2012	SA005	M24 X 1
KAWASAKI					
600	ZX-6R	2005	2012	SA001	M28 X 1
1000	ZX-10R	2004	2012	SA001	M28 X 1

CC	MODELLO Model	ANNI / years DA From	A To	CODICE Reference	FILETTATURA Screw pitch
SUZUKI					
600	GSX-R600	2006	2012	SA001	M28 X 1
750	GSX-R750	2006	2012	SA001	M28 X 1
1000	GSX-R1000	2003	2012	SA001	M28 X 1
TRIUMPH					
675	DAYTONA675	2007	2012	SA005	M24 X 1
YAMAHA					
600	YZF-R6	1999	2012	SA001	M28 X 1
1000	FZ1	2006		SA001	M28 X 1
1000	R1	2015	2015	SA001	M28 X 1
1000	YZF-R1	1998	2012	SA001	M28 X 1

GHIERA DI STERZO CHIUSA / closed steering nut



APPLICAZIONI / application list

CC	MODELLO Model	ANNI / years DA From	A To	CODICE Reference	FILETTATURA Screw pitch
BMW					
1000	S1000RR	2009	2012	SC001	M28 X 1
HONDA					
250	CBR250R	2011	2014	SC005	M24 X 1
600	CBR600RR	2003	2012	SC005	M24 X 1
600	HORNET600	2003	2009	SC005	M24 X 1
900	CBR900RR	2002	2003	SC005	M24 X 1
900	HORNET900	2002	2009	SC005	M24 X 1
1000	CB1000R	2008	2012	SC005	M24 X 1
KAWASAKI					
600	ZX 6R	2005	2012	SC001	M28 X 1
1000	ZX 10R	2004	2012	SC001	M28 X 1

CC	MODELLO Model	ANNI / years DA From	A To	CODICE Reference	FILETTATURA Screw pitch
SUZUKI					
600	GSX R600	2006	2012	SC001	M28 X 1
750	GSX R750	2006	2012	SC001	M28 X 1
1000	GSX R1000	2008	2012	SC001	M28 X 1
TRIUMPH					
675	DAYTONA675	2007	2012	SC005	M24 X 1
YAMAHA					
600	YZF R6	1999	2012	SC001	M28 X 1
1000	FZ1	2006		SC001	M28 X 1
1000	R1	2015	2015	SC001	M28 X 1
1000	YZF R1	1998	2012	SC001	M28 X 1

STREET RACING

GHIERA PRECARIO FORCELLA / fork preload steering nut



COLORI
Colours

N	**NERO** / black
Y	**ORO** / gold
B	**BLU** / blue
R	**ROSSO** / red
S	**ARGENTO** / silver
G	**VERDE** / green
T	**TITANIO** / titanium

APPLICAZIONI
application list

CC	MODELLO Model	ANNI / years DA From	A To	CODICE Reference
	APRILIA			
250	RS250	1995	1997	AD022
1000	RSV1000			AD017
1000	RSV1000	2000	2003	AD022
1000	SL FALCO 1000			AD022
	RSV4			AD017
	TUONO	2012	2014	AD017
	BENELLI			
	TORNADO			AD022
	TORNADO	2007	2008	AD022
	BMW			
1000	S1000RR	2009	2012	AD017
1000	S1000R	2012	2015	AD017
	BUELL			
	XB12			AD022
	XB9			AD022
	DUCATI			
748	Ducati 748	2000	2006	AD022
796	HYPERMOTARD796			AD017
916	Ducati 916	2000	2006	AD022
996	Ducati 996	2000	2006	AD022
998	Ducati 998	2000	2006	AD022
999	Ducati 999	2000	2006	AD022
1098	DUCATI 1098			AD017
1098	Ducati 1098			AD022
1100	HYPERMOTARD1100			AD017
1100	HYPERMOTARD1100EVO			AD017
1100	HYPERMOTARD 1100			AD022
1100	HYPERMOTARD 1100 EVO			AD022
1200	MULTISTRADA 1200	2015	2015	AD014
	MONSTER696	2008	2010	AD017
	HYPERMOTARD 796			AD022
	HONDA			
400	RVF400			AD022
600	CBR600RR	2005	2006	AD022
600	CBR600RR	1991	2007	ADO
600	CBR600RR	2007	2012	AD019
900	CBR900RR	2000	2003	AD022
900	CBR900RR	1992	1999	ADO
1000	CBR1000RR	2004	2007	AD022
1000	VTR 1000 SP1	2000	2007	AD022
1000	VTR 1000 F	2000	2007	AD022
1000	VTR1000F	2000	2007	ADO
1000	CB1000R	2008	2012	AD019
1000	CBR1000RR	2008	2010	AD019
	KAWASAKI			
400	ZXR400	1990	2002	AD022

CC	MODELLO Model	ANNI / years DA From	A To	CODICE Reference
750	Z750	2007	2009	AD014
1000	Z1000	2003	2006	AD022
1000	Z1000	2007	2012	AD019
	ZX-12R	2000	2006	AD017
	ZX-6R	1998	2002	AD017
	ZX-9R	1998	2003	AD017
	ZX-6R	2005	2006	AD022
	ZX-6RR	2005	2006	AD022
	ZX-6R	2007	2008	AD019
	ZX-10R	2004	2010	AD014
	ZX-6R	2003	2004	AD014
	MORINI			
1200	CORSARO	2007	2008	AD019
	MV AGUSTA			
	F4	2012	2013	AD022
910	BRUTALE910			AD019
	F4			AD019
	SUZUKI			
600	GSX-R600	2004	2005	AD022
600	GSX-R600	1997	2003	ADO
600	GSX-R600	2006	2012	AD019
750	GSX-R750	1992	2003	AD022
750	GSX-R750	2006	2012	AD019
1000	GSX-R1000	2001	2008	AD014
1000	SV 1000	2003	2005	AD014
1100	GSX-R1100	1996	1998	AD017
1300	GSX-R1300	1995	1998	AD017
	TRIUMPH			
675	DAYTONA675R	2014		AD017
675	DAYTONA 675	2006	2012	AD014
675	STREET TRIPLE 675	2007	2012	AD014
955	DAYTONA 955 IE	1999	2002	ADO
955	SPEED TRIPLE 955	2000	2004	ADO
1050	SPEED TRIPLE 1050	2008	2010	AD022
1050	SPEED TRIPLE 1050	2011	2012	AD019
	YAMAHA			
600	YZF600	1996	2002	AD017
750	YZF750R	1993	1998	AD017
750	YZF750SP	1993	1998	AD017
1000	FZR1000	1991	1995	AD017
1000	THUNDERACE1000	2000	2005	AD017
1000	YZF1000	1996	2002	AD017
600	YZF-R6	1999	2012	AD017
600	FZ6	2006	2012	AD014
	MT-09	2013	2014	AD014
1000	YZF-R1	1998	2012	AD014


PIRELLI
TISSOT
ATCHES SINCE 1853
PIRELLI
BERGAMASCA SERVIZI
ogmbena
OSMANLI SPOR FUTBOL KULÜPLÜ
2014
elf
PUCCETTI
RACING TEAM
Kawasa
VITTADI
Red B
SHO

STREET RACING

PROTEZIONE FORCELLA POSTERIORE / rear fork protection

POSTERIORE / rear

COLORI Colours
N ■ NERO / black



APPLICAZIONI / application list

MODELLO Model	ANNI / years DA From	A To	CODICE Reference
APRILIA			
RSV4	2009	2015	PP001
DORSODURO 750/1200	2009	2015	PP011
SHIVER 750/ 750 GT			PP011
BMW			
S 1000 RR	2009	2014	PP010
S 1000 RR	2015		PP017
DUCATI			
749/999			PP005
SCRAMBLER			PP018
HONDA			
CBR600RR	2003	2015	PP006
CBR1000RR	2004	2007	PP012
KAWASAKI			
ZX-6R	2003	2015	PP004
ZX-10R	2011	2015	PP004
KTM			
RC8	2008	2012	PP013

MODELLO Model	ANNI / years DA From	A To	CODICE Reference
SUZUKI			
GSX-R600/750	2006	2015	PP001
GSX-R1000	2005	2006	PP007
GSX-R1000	2009	2015	PP001
GSR 600	2006	2011	PP002
GSX-R600 SRAD	1998		PP008
GSR 750	2012	2015	PP014
TRIUMPH			
STREET TRIPLE 675/675 R	2007	2015	PP003
DAYTONA 675 R	2014	2015	PP003
YAMAHA			
YZF-R6	2001	2015	PP001
FZ1	2006	2014	PP001
YZF-R1	1998	2003	PP009
YZF-R1	2004	2014	PP001
FZ6	2006	2008	PP015
FZ6	2009	2014	PP016
YZF-R1	2015		PP019

ACCOSSATO

ANTERIORE / front

APPLICAZIONI / application list

CC	MODELLO Model	ANNI / years DA From	A To	CODICE Reference
	APRILIA			
1200	DORSODURO	2009	2012	PF019
750	DORSODURO			PF031
750	SHIVER			PF031
750	SHIVER GT			PF031
	BENELLI			
	TORNDO			PF027
	BMW			
1000	S 1000 RR	2009	2012	PF025
1000	S1000RR	2015	2015	PF043
1000	S1000R	2012	2015	PF047
	BUELL			
	XB12	2008	2010	PF023
	DUCATI			
696	MONSTER	2008	2009	PF012
749	DUCATI 749			PF015
796	HYPERMOTARD 796	2008	2012	PF016
821	HYPERMOTARD	2013	2015	PF042
848	848	2007	2012	PF05
999	DUCATI 999			PF015
1098	1098	2007	2012	PF05
1100	HYPERMOTARD 1100	2008	2012	PF016
1100	HYPERMOTARD 1100 EVO	2008	2012	PF016
1199	PANIGALE			PF033
1200	MULTISTRADA1200S			PF05
	STREETFIGHTER			PF05
	DIAVEL			PF030
	SCRAMBLER	2015		PF044
	HONDA			
600	CBR600RR	2004	2012	PF013
1000	CB1000R	2008	2012	PF013
1000	CBR1000RR	2004	2011	PF011
	KAWASAKI			
750	Z750	2007	2008	PF02
1000	Z1000	2007	2008	PF02
1000	Z1000	2011	2012	PF029
	ZX-10R	2008	2011	PF08

CC	MODELLO Model	ANNI / years DA From	A To	CODICE Reference
	ZX-6R	2003	2012	PF08
	ZX-10R	2006	2007	PF04
	KTM			
	RC8	2008	2012	PF035
	MORINI			
1200	CORSARO	2008	2009	PF010
	MV AGUSTA			
	F4	2012	2013	PF034
800	RIVALE	2013	2015	PF045
	SUZUKI			
600	GSX-R600	1999		PF022
600	GSX-R600	2001	2004	PF018
600	GSX-R600	2005	2015	PF01
600	GSR	2006	2012	PF014
750	GSX-R750	2001	2004	PF018
750	GSX-R750	2005	2010	PF01
750	GSR	2012	2013	PF014
1000	GSX-R1000	2005	2012	PF01
	TRIUMPH			
675	DAYTONA	2006	2012	PF03
675	DAYTONA R	2014		PF03
675	STREET TRIPLE	2008	2012	PF03
1050	SPEED TRIPLE	2005	2010	PF06
1050	SPEED TRIPLE	2011	2012	PF028
	YAMAHA			
300	MT-03	2008	2010	PF024
530	TMAX	2012		PF032
600	YZF-R6	2007	2012	PF013
600	FZ6	2004	2012	PF09
600	YZF-R6	1999	2002	PF021
700	MT-07	2013	2014	PF041
900	MT-09	2013	2014	PF040
1000	YZF-R1	2004	2012	PF013
1000	FZ1	2007		PF07
1000	YZF-R1	1998	2003	PF021
	R1	2015	2015	PF046

STREET RACING

SUPPORTI CAVALLETTO / stand supports



COLORI / Colours	
N	NERO / black
Y	ORO / gold
B	BLU / blue
R	ROSSO / red
S	ARGENTO / silver
G	VERDE / green
T	TITANIO / titanium

APPLICAZIONI / application list

MODELLO Model	ANNI / years DA From	A To	CODICE Reference	FILETTATURA Screw pitch
APRILIA				
ALL MODELS			ST001	M6
BMW				
S1000RR	2009	2015	ST002	M8
HONDA				
ALL MODELS			ST002	B8
KAWASAKI				
ALL (no ZX-10R 2011)			ST004	M10 X 1,25
ZX-10R	2011	2015	ST002	M8

MODELLO Model	ANNI / years DA From	A To	CODICE Reference	FILETTATURA Screw pitch
SUZUKI				
ALL MODELS			ST002	M8
TRIUMPH				
ALL MODELS			ST001	M6
DAYTONA 675	2010	2015	ST002	M8
STREET TRIPLE 675	2010	2015	ST002	M8
YAMAHA				
ALL MODELS			ST001	M6

SUPPORTI CAVALLETTO CON PROTEZIONE / stand supports with protection



APPLICAZIONI / application list

MODELLO Model	CODICE / Reference MOD. 1	MOD. 2	FILETTATURA Screw pitch
APRILIA			
ALL	ST006	ST026	M6
BMW			
S 1000 RR	ST008	ST028	M8
HONDA			
ALL	ST008	ST028	M8
KAWASAKI			
ALL (no ZX-10R 2011)	ST010	ST030	M10 X 1,25
ZX-10R (2011-2013)	ST008	ST028	M8

MODELLO Model	CODICE / Reference MOD. 1	MOD. 2	FILETTATURA Screw pitch
SUZUKI			
ALL	ST008	ST028	M8
TRIUMPH			
ALL	ST006	ST026	M6
DAYTONA 675 (2010-2013)	ST008	ST028	M8
STREET TRIPLE 675 (2010-2013)	ST008	ST028	M8
YAMAHA			
ALL	ST006	ST026	M6

ACCOSSATO

KIT PROIETTORI FENDINEBBIA E SUPPORTI / led fog lights kit



CODICE Reference	DESCRIZIONE Description	CARATTERISTICHE TECNICHE Technical details	
FN001	**KIT PROIETTORI FENDINEBBIA UNIVERSALI, CON TECNOLOGIA A LED E CORPO IN ALLUMINIO** universal led fog light kit, aluminium-made, with led technology	**ASSORBIMENTO LUCI A LED** led-light absorption power	**10 W CAD.** / each
		RESISTENTE ALL'ACQUA water resistance	**IP68**
		CONNETTORE / connector	**2-PIN**
		TEMPERATURA DI ESERCIZIO operating temperatures	**- 40°** / + 85°
		PESO / WEIGHT	**320 GR**
		INPUT	**9 - 50V**
		LUMEN	**900**

CODICE Reference	DESCRIZIONE Description	CONTENUTO Contents
FN002	**KIT PROIETTORI FENDINEBBIA UNIVERSALI, CON STAFFE DI SUPPORTO** Accossato universal kit, including fog light kit privided with brackets	**UNA COPPIA DI PROIETTORI FENDINEBBIA (FN001)** **UNA COPPIA DI STAFFE DI SUPPORTO (FS001)** a pair of fog lights (FN001) brackets (FS001)

CODICE Reference	DESCRIZIONE Description	CARATTERISTICHE TECNICHE Technical details
FS001	**STAFFA DI SUPPORTO PER PROIETTORI FENDINEBBIA** fog-light brackets	**PER TUBI Ø DA 25MM A 32MM** brackets suitable for rods Ø from 25mm to 32mm

STREET RACING

SPECCHIETTI RETROVISORI / rear-view mirrors



CODICE Reference	DESCRIZIONE Description	CARATTERISTICHE TECNICHE Technical details		COLORI Colours
MR001	SPECCHIETTO RETROVISORE UNIVERSALE PER MOTO STRADALI UNIVERSAL REAR-VIEW MIRROR for on-road motorcycles	DIMENSIONI / dimensions	110 x 58 MM	N NERO / black
		PASSO / pitch	M10 x 1,25	
		ADATTATORI INCLUSI adapters included	M8 x 1,25	



CODICE Reference	DESCRIZIONE Description	CARATTERISTICHE TECNICHE Technical details		COLORI Colours
MR002	SPECCHIETTO RETROVISORE CNC ACCOSSATO CON INDICATORE DI DIREZIONE INTEGRATO Accossato cnc-worked rear-view mirror with direction indicator integrated	DIMENSIONI / dimensions	134 x 80MM	N NERO / black
		PASSO / pitch	M10x1,25	
		ADATTATORI / adapters	NO	
		SUPERFICIE RIFLETTENTE reflective surface	AZZURRATA blue-tinted mirror	
		TIPO LUCE / light type	LED	

ACCOSSATO

STREET RACING

SPECCHIETTI RETROVISORI / rear-view mirrors



CODICE Reference	DESCRIZIONE Description	CARATTERISTICHE TECNICHE Technical details		COLORI Colours
MR003	SPECCHIETTO RETROVISORE CNC CON INSERTI COLORATI Accossato cnc-worked rear-view mirror with integrated coloured insets	DIMENSIONI / dimensions	134 x 80MM	N NERO / black O ARANCIONE / orange Y ORO / gold B BLU / blue R ROSSO / red S ARGENTO / silver G VERDE / green T TITANIO / titanium
		PASSO / pitch	M10x1,25	
		ADATTATORI / adapters	NO	
		SUPERFICIE RIFLETTENTE reflective surface	AZZURRATA blue-tinted mirror	
		INSERTI / insets	CNC / cnc-worked	

APPLICAZIONI / application list - MR002 & MR003

MARCA Brand	MODELLO Model	ANNI / years DA From	A To
BMW			
	F 800 R	2009	2014
	HP2 MEGAMOTO	2007	→
	K 1200 R	2005	2008
	K 1300 R	2009	→
	R 1200 GS	2004	→
	R 1200 R/ R CLASSIC	2006	2015
	R NINET	2014	→
	S 1000 R	2014	→
	S 1000 XR	2014	→
HONDA			
	CB 650 F	2015	→
	CB 1000 R	2013	→
	NC700X	2012	→
	INTEGRA	2012	→
KAWASAKI			
	ER-6N	2012	→
	Z300	2015	→
	VERSYS 1000 ABS	2012	→
MV AGUSTA			
	BRUTALE 675	2012	→
	BRUTALE 800 /1090	2013	2015
TRIUMPH			
	STREET TRIPLE RX	2015	→
	STREET TRIPLE/ R	2013	→
	TIGER 800/ EXPLORER	2011	→
YAMAHA			
	XV950R	2014	→

STREET RACING

SPECCHIETTI RETROVISORI / rear-view mirrors



RICAMBI / spare parts

CODICE Reference	DESCRIZIONE Description	APPLICAZIONI Application list	MODELLO Model	ANNI / years DA / From	A / To
AD003	KIT ADATTATORI M8 X 1,25 X 75 adapters kit M8 x 1,25 x 75	BMW	K 1200 RS	1997	2006
			R 1150 R	2000	2007
			R 1150 RS	2000	2007
			R 1150 GS	1999	2006
		HARLEY-DAVIDSON	ALL	ALL	
AD004	KIT ADATTATORI M8 X 1,25 X 25 adapters kit M8 x 1,25 x 25	DUCATI	MONSTER 696	2008	→
			MONSTER 796	2010	→
			MONSTER 821	2014	→
			MONSTER 1100	2009	→
			MONSTER 1100 EVO	2009	→
			MONSTER 1200	2014	→
			STREETFIGHTER	2009	→
			STREETFIGHTER 848	2013	→
AD005	KIT ADATTATORI M10 X 1,25 SX adapters kit M8 x 1,25 SX	DUCATI	MULTISTRADA 1200	2015	→
			MULTISTRADA 1200 S	2015	→

CATADIOTTRO / retroreflector

CODICE Reference	DESCRIZIONE Description	COLORI Colours
CD001	SUPPORTO CATADIOTTRO support retroreflector license plate	N NERO / black

CODICE Reference	DESCRIZIONE Description	COLORI Colours
CD002	CATADIOTTRO retroreflector license plate	

CODICE Reference	DESCRIZIONE Description	COLORI Colours
CD003	SUPPORTO CATADIOTTRO CON CATADIOTTRO support retroreflector license plate with retroreflcetor license plate	N NERO / black



MANUBRI
handlebars

INDICE SEZIONE MANUBRI
handlebars index

CONTRAPPESI
handlabar ends: **131 - 133**

ANALITICO MANUBRI
handlebars application list: **134 - 163**

SCHEDE MANUBRI
handlebars data sheets: **164 - 192**

CAVALLOTTI
risers: **193 - 194**

COMANDI GAS MONOCAVO
single-cable throttle control: **195**

ACCOSSATO

STREET RACING

CONTRAPPESI / handlebar ends



CODICE / Reference	DESCRIZIONE / Description
TK001	CONTRAPPESO PER MANUBRI CON FORO INTERNO Ø DA 12MM A 20MM handlebar end suitable for handlebars Ø from 12mm to 20mm

COLORI / Colours	
N	NERO / black (NO TK002)
O	ARANCIONE / orange
Y	ORO / gold
B	BLU / blue
R	ROSSO / red
S	ARGENTO / silver
G	VERDE / green



CODICE / Reference	DESCRIZIONE / Description
TK002	CONTRAPPESO CON INSERTO COLORATO, PER MANUBRI CON FORO INTERNO, Ø DA 12MM A 20MM handlebar end with coloured insert, suitable for handlebars Ø from 12mm to 20mm

NEW



CODICE / Reference	DESCRIZIONE / Description
TK004	CONTRAPPESO PER MANUBRI CON FORO INTERNO Ø DA 12MM A 20MM handlebar end suitable for handlebars Ø from 12mm to 20mm

STREET RACING

CONTRAPPESI / handlebar ends

ACCOSSATO

APPLICAZIONI / application list TK001 - TK004

MARCA Brand	MODELLO Model	ANNI / years		Ø	CODICE / Reference		
		DA / From	A / To		TK001	TK002	TK004
APRILIA	RSV4	2009	2015		X	X	X
	RSV1000	2004	2008		X	X	X
	SHIVER 750	2007	2015		X	X	X
	TUONO	2006	2009		X	X	X
	TUONO V4	2011	2015		X	X	X
BMW	S1000R	2014	2015		X	X	X
	S1000RR	2009	2015		X	X	X
DUCATI	DIAVEL	2011	2015	12 MM	X	X	X
	MONSTER S4-ST2	2007	2007		X	X	X
	MONSTER 821	2014	2015	17 MM	X	X	X
	MONSTER 1100	2011	2013	14,5 MM	X	X	X
	MULTISTRADA 1200	2003	2009		X	X	X
	PANIGALE 899	2013	2015		X	X	X
	PANIGALE 1199	2012	2015		X	X	X
	PANIGALE 1299	2015	2016		X	X	X
	STREETFIGHTER 848/1100	2008	2015	14,5 MM	X	X	X
	848	2008	2011	12 MM	X	X	X
	1098/1198	2007	2011	17 MM	X	X	X
HONDA	TUTTE - ALL				X	X	X
KAWASAKI	ER-6N	2012	2015		X	X	X
	ZX250R	2009	2012		X	X	X
	Z750	2004	2012		X	X	X
	Z800	2013	2015		X	X	X
	Z1000	2003	2015		X	X	X
	Z1000 SX	2011	2015		X	X	X
	ZX6R	2003	2015		X	X	X
	ZX10R	2011	2015		X	X	X
	ZX10R	2016	2016		X	X	X
MV AGUSTA	B3 675/800	2012	2015		X	X	X
	F3 675/800	2011	2015		X	X	X
	BRUTALE 4 CILINDRI- TUTTE / ALL	2001	2015		X	X	X
	F4- TUTTE / ALL	2010	2015		X	X	X
	RIVALE 800	2014	2015		X	X	X
SUZUKI	GLADIUS 650	2009	2015		X	X	X
	GSR 600	2006	2011		X	X	X
	GSR 750	2011	2015		X	X	X
	GSXR 600/750	2000	2015		X	X	X
	GSXR 1000	2003	2016		X	X	X
TRIUMPH	STREET TRIPLE 675	2007	2012		X	X	X
	STREET TRIPLE 675 R	2013	2015		X	X	X
YAMAHA	R1	1998	2016		X	X	X
	R3	2015	2016		X	X	X
	R6	2000	2016		X	X	X

T - MAX



CODICE / Reference	**DESCRIZIONE** / Description	**COLORI** / Colours
TK003	**CONTRAPPESO CON INSERTO COLORATO, SPECIFICO APPLICAZIONI T-MAX** handlebar end with coloured insert, specific for T-Max models	**O** **ARANCIONE** / orange **Y** **ORO** / gold **B** **BLU** / blue **R** **ROSSO** / red **S** **ARGENTO** / silver **G** **VERDE** / green

APPLICAZIONI / application list - **TK003**

MODELLO Model	**ANNI** / years	
	DA From	**A** To
YAMAHA		
FAZER 600 - FZ6	**2004**	**2006**
FAZER 1000	**2001**	**2012**
MT-07	**2014**	**2016**
MT-09	**2013**	**2016**
T MAX 500-530	**2002**	**2016**
TDM 900	**2002**	**2008**
R 125	**2008**	**2015**
X-MAX 400	**2013**	**2016**

STREET RACING

INDICE ANALITICO MANUBRI / handlebars index

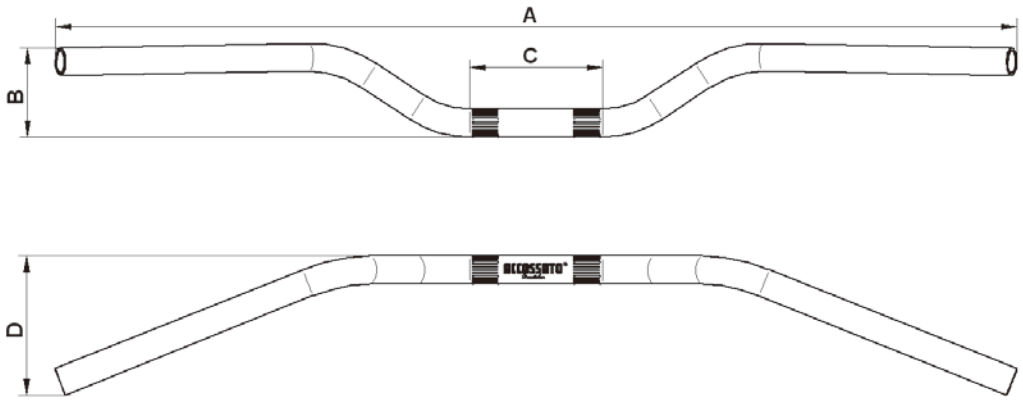

CC	MODELLO Model	ANNI / years DA From	ANNI / years A To	Ø	QUOTE / Dimensions A	B	C	D	TELAIO Chassis	CODICE Reference	MATERIALE Raw material
AEON											
180	Cobra 180	2007	2011	22	750	132	130	113	AT 18	HB175	**ALLUMINIO** / aluminium
180	Cobra 180	2007	2011	22	750	132	130	113	AT 18	HB162	**ACCIAIO** / steel
180	Cobra 180	2007	2011	22	750	132	130	113	AT 18	HB163	**ACCIAIO** / steel
ALL											
ALL	ALL	ALL	ALL	22	700	0	185	87		HB153	**ACCIAIO** / steel
ALL	ALL	ALL	ALL	22	745	75	110	100		HB154	**ACCIAIO** / steel
ALL	ALL	ALL	ALL	22	810	185	120	122		HB155	**ACCIAIO** / steel
ALL	ALL	ALL	ALL	22	717	191	60	231		HB157	**ACCIAIO** / steel
APRILIA											
125	Tuono 125	2003	2004	22	750	132	130	113	SF	HB175	**ALLUMINIO** / aluminium
125	Tuono 125	2003	2004	22	855	101	175	91	SF	HB174	**ALLUMINIO** / aluminium
125	Tuono 125	2003	2004	22	750	132	130	113	SF	HB162	**ACCIAIO** / steel
125	Tuono 125	2003	2004	22	750	132	130	113	SF	HB163	**ACCIAIO** / steel
650	Moto 6.5	1995	1999	22	755	134	146	102	MH00	HB152	**ALLUMINIO** / aluminium
650	Moto 6.5	1995	1999	22	820	87	145	75	MH00	HB167	**ALLUMINIO** / aluminium
650	Moto 6.5	1995	1999	22	755	134	146	102	MH00	HB150	**ACCIAIO** / steel
650	Moto 6.5	1995	1999	22	755	134	146	102	MH00	HB151	**ACCIAIO** / steel
650	Pegaso 650	1992	1996	22	750	132	130	113	GA	HB175	**ALLUMINIO** / aluminium
650	Pegaso 650	1992	1996	22	750	132	130	113	MX	HB175	**ALLUMINIO** / aluminium
650	Pegaso 650	1997	2000	22	750	132	130	113	ML	HB175	**ALLUMINIO** / aluminium
650	Pegaso 650	1996	2001	22	755	134	146	102	MX	HB152	**ALLUMINIO** / aluminium
650	Pegaso 650	1997	2000	22	755	134	146	102	ML	HB152	**ALLUMINIO** / aluminium
650	Pegaso 650	1992	1996	22	855	101	175	91	GA	HB174	**ALLUMINIO** / aluminium
650	Pegaso 650	1997	2000	22	855	101	175	91	ML	HB174	**ALLUMINIO** / aluminium
650	Pegaso 650	1997	2000	22	820	87	145	75	ML	HB167	**ALLUMINIO** / aluminium
650	Pegaso 650	1997	2000	22	755	134	146	102	ML	HB150	**ACCIAIO** / steel
650	Pegaso 650	1997	2000	22	755	134	146	102	ML	HB151	**ACCIAIO** / steel
650	Pegaso 650	1992	1996	22	750	132	130	113	GA	HB162	**ACCIAIO** / steel
650	Pegaso 650	1992	1996	22	750	132	130	113	MX	HB162	**ACCIAIO** / steel
650	Pegaso 650	1997	2000	22	750	132	130	113	ML	HB162	**ACCIAIO** / steel
650	Pegaso 650	1992	1996	22	750	132	130	113	GA	HB163	**ACCIAIO** / steel
650	Pegaso 650	1992	1996	22	750	132	130	113	MX	HB163	**ACCIAIO** / steel
650	Pegaso 650	1997	2000	22	750	132	130	113	ML	HB163	**ACCIAIO** / steel
650	Pegaso 650 i.e.	2001	2004	22	750	132	130	113	VD	HB175	**ALLUMINIO** / aluminium
650	Pegaso 650 i.e.	2001	2004	22	755	134	146	102	RW	HB152	**ALLUMINIO** / aluminium
650	Pegaso 650 i.e.	2001	2004	22	820	87	145	75	RW	HB167	**ALLUMINIO** / aluminium
650	Pegaso 650 i.e.	2001	2004	22	755	134	146	102	RW	HB150	**ACCIAIO** / steel
650	Pegaso 650 i.e.	2001	2004	22	755	134	146	102	RW	HB151	**ACCIAIO** / steel
650	Pegaso 650 i.e.	2001	2004	22	750	132	130	113	VD	HB162	**ACCIAIO** / steel
650	Pegaso 650 i.e.	2001	2004	22	750	132	130	113	VD	HB163	**ACCIAIO** / steel

ACCOSSATO

STREET RACING

INDICE ANALITICO MANUBRI / handlebars index

CC	MODELLO Model	ANNI / years DA From	A To	Ø	QUOTE / Dimensions A	B	C	D	TELAIO Chassis	CODICE Reference	MATERIALE Raw material
660	Pegaso 650 i.e.	2005	2009	22	855	101	175	91	VD	HB174	ALLUMINIO / aluminium
660	Pegaso 650 Strada	2005	2009	22	755	134	146	102	VD	HB152	ALLUMINIO / aluminium
660	Pegaso 650 Strada	2005	2009	22	820	87	145	75	VD	HB167	ALLUMINIO / aluminium
660	Pegaso 650 Strada	2005	2009	22	755	134	146	102	VD	HB150	ACCIAIO / steel
660	Pegaso 650 Strada	2005	2009	22	755	134	146	102	VD	HB151	ACCIAIO / steel
750	Shiver	2007	2016	28	745	90	130	135		HB173	ALLUMINIO / aluminium
750	SL 750 Shiver / GT	2007	2016	22	755	134	146	102	RA	HB152	ALLUMINIO / aluminium
750	SL 750 Shiver / GT	2007	2016	22	820	87	145	75	RA	HB167	ALLUMINIO / aluminium
750	SL 750 Shiver / GT	2007	2016	22	755	134	146	102	RA	HB150	ACCIAIO / steel
750	SL 750 Shiver / GT	2007	2016	22	755	134	146	102	RA	HB151	ACCIAIO / steel
750	SMV 750 Dorsoduro	2008	2016	22	755	134	146	102	SM	HB152	ALLUMINIO / aluminium
750	SMV 750 Dorsoduro	2008	2016	22	820	87	145	75	SM	HB167	ALLUMINIO / aluminium
750	SMV 750 Dorsoduro	2008	2016	22	755	134	146	102	SM	HB150	ACCIAIO / steel
750	SMV 750 Dorsoduro	2008	2016	22	755	134	146	102	SM	HB151	ACCIAIO / steel
850	NA 850 Mana / GT	2007	2016	22	755	134	146	102	RC	HB152	ALLUMINIO / aluminium
850	NA 850 Mana / GT	2007	2016	22	820	87	145	75	RC	HB167	ALLUMINIO / aluminium
850	NA 850 Mana / GT	2007	2016	22	755	134	146	102	RC	HB150	ACCIAIO / steel
850	NA 850 Mana / GT	2007	2016	22	755	134	146	102	RC	HB151	ACCIAIO / steel
1000	ETV 1000 Capo Nord	2001	2007	22	755	134	146	102	PS	HB152	ALLUMINIO / aluminium
1000	ETV 1000 Capo Nord	2001	2007	22	820	87	145	75	PS	HB167	ALLUMINIO / aluminium
1000	ETV 1000 Capo Nord	2001	2007	22	755	134	146	102	PS	HB150	ACCIAIO / steel
1000	ETV 1000 Capo Nord	2001	2007	22	755	134	146	102	PS	HB151	ACCIAIO / steel
1000	RSV 1000 Tuono	2002	2005	22	755	134	146	102	RP	HB152	ALLUMINIO / aluminium
1000	RSV 1000 Tuono	2002	2005	22	820	87	145	75	RP	HB167	ALLUMINIO / aluminium
1000	RSV 1000 Tuono	2002	2005	22	755	134	146	102	RP	HB150	ACCIAIO / steel
1000	RSV 1000 Tuono	2002	2005	22	755	134	146	102	RP	HB151	ACCIAIO / steel
1000	Tuono 1000 R / Factory	2006	2009	22	755	134	146	102	RR	HB152	ALLUMINIO / aluminium
1000	Tuono 1000 R / Factory	2006	2009	22	820	87	145	75	RR	HB167	ALLUMINIO / aluminium
1000	Tuono 1000 R / Factory	2006	2009	22	755	134	146	102	RR	HB150	ACCIAIO / steel
1000	Tuono 1000 R / Factory	2006	2009	22	755	134	146	102	RR	HB151	ACCIAIO / steel
1000	Tuono 1000 V4	2011	2014	22	750	132	130	113	TY	HB175	ALLUMINIO / aluminium
1000	Tuono 1000 V4	2011	2013	22	855	101	175	91	TY	HB174	ALLUMINIO / aluminium
1000	Tuono 1000 V4	2011	2014	22	750	132	130	113	TY	HB162	ACCIAIO / steel
1000	Tuono 1000 V4	2011	2014	22	750	132	130	113	TY	HB163	ACCIAIO / steel
ALL	Tuono	2002	2016	28	745	90	130	135		HB173	ALLUMINIO / aluminium
BENELLI											
900	TnT 899s	2008	2009	22	755	134	146	102	TN	HB152	ALLUMINIO / aluminium
900	Trek 899	2009	2011	22	755	134	146	102	TK	HB152	ALLUMINIO / aluminium
900	TnT 899s	2008	2009	22	820	87	145	75	TN	HB167	ALLUMINIO / aluminium
900	Trek 899	2009	2011	22	820	87	145	75	TK	HB167	ALLUMINIO / aluminium
900	TnT 899s	2008	2009	22	755	134	146	102	TN	HB150	ACCIAIO / steel
900	Trek 899	2009	2011	22	755	134	146	102	TK	HB150	ACCIAIO / steel
900	TnT 899s	2008	2009	22	755	134	146	102	TN	HB151	ACCIAIO / steel
900	Trek 899	2009	2011	22	755	134	146	102	TK	HB151	ACCIAIO / steel
1130	TnT 1130 / Sport Evo / Titanium	2005	2007	22	755	134	146	102	TN	HB152	ALLUMINIO / aluminium
1130	Trek 1130 / Amazonas	2007	2008	22	755	134	146	102	TK	HB152	ALLUMINIO / aluminium
1130	TnT 1130 / Sport Evo / Titanium	2005	2007	22	820	87	145	75	TN	HB167	ALLUMINIO / aluminium
1130	Trek 1130 / Amazonas	2007	2008	22	820	87	145	75	TK	HB167	ALLUMINIO / aluminium
1130	TnT 1130 / Sport Evo / Titanium	2005	2007	22	755	134	146	102	TN	HB150	ACCIAIO / steel
1130	Trek 1130 / Amazonas	2007	2008	22	755	134	146	102	TK	HB150	ACCIAIO / steel
1130	TnT 1130 / Sport Evo / Titanium	2005	2007	22	755	134	146	102	TN	HB151	ACCIAIO / steel
1130	Trek 1130 / Amazonas	2007	2008	22	755	134	146	102	TK	HB151	ACCIAIO / steel
ALL	TNT	2004	2014	28	745	90	130	135		HB173	ALLUMINIO / aluminium
BIMOTA											
1100	DELIRIO	2011	2013	28	745	90	130	135		HB173	ALLUMINIO / aluminium
1100	DB6 Delirio	2011	2013	22	755	134	146	102	DB06	HB152	ALLUMINIO / aluminium
1100	DB6 Delirio	2011	2013	22	820	87	145	75	DB06	HB167	ALLUMINIO / aluminium
1100	DB6 Delirio	2011	2013	22	755	134	146	102	DB06	HB150	ACCIAIO / steel
1100	DB6 Delirio	2011	2013	22	755	134	146	102	DB06	HB151	ACCIAIO / steel

STREET RACING

INDICE ANALITICO MANUBRI / handlebars index

CC	MODELLO Model	ANNI / years DA From	A To	Ø	QUOTE / Dimensions A	B	C	D	TELAIO Chassis	CODICE Reference	MATERIALE Raw material
					BMW						
100	R 100 CS	1980	1984	22	755	134	146	102	BMW247	HB152	**ALLUMINIO** / aluminium
100	R 100 CS	1980	1984	22	820	87	145	75	BMW247	HB167	**ALLUMINIO** / aluminium
100	R 100 CS	1980	1984	22	755	134	146	102	BMW247	HB150	**ACCIAIO** / steel
100	R 100 CS	1980	1984	22	755	134	146	102	BMW247	HB151	**ACCIAIO** / steel
650	F 650 / ST	1996	2000	22	755	134	146	102	BMW169	HB152	**ALLUMINIO** / aluminium
650	F 650 CS	2000	2005	22	755	134	146	102	E650C	HB152	**ALLUMINIO** / aluminium
650	F 650 CS	2000	2005	22	755	134	146	102	K14	HB152	**ALLUMINIO** / aluminium
650	F 650 GS / PD	1999	2007	22	755	134	146	102	E650G	HB152	**ALLUMINIO** / aluminium
650	F 650 GS / PD	1999	2007	22	755	134	146	102	R13	HB152	**ALLUMINIO** / aluminium
650	F 650 / ST	1996	2000	22	820	87	145	75	BMW169	HB167	**ALLUMINIO** / aluminium
650	F 650 CS	2000	2005	22	820	87	145	75	E650C	HB167	**ALLUMINIO** / aluminium
650	F 650 CS	2000	2005	22	820	87	145	75	K14	HB167	**ALLUMINIO** / aluminium
650	F 650 GS / PD	1999	2007	22	820	87	145	75	E650G	HB167	**ALLUMINIO** / aluminium
650	F 650 GS / PD	1999	2007	22	820	87	145	75	R13	HB167	**ALLUMINIO** / aluminium
650	F 650 / ST	1996	2000	22	755	134	146	102	BMW169	HB150	**ACCIAIO** / steel
650	F 650 CS	2000	2005	22	755	134	146	102	E650C	HB150	**ACCIAIO** / steel
650	F 650 CS	2000	2005	22	755	134	146	102	K14	HB150	**ACCIAIO** / steel
650	F 650 GS / PD	1999	2007	22	755	134	146	102	E650G	HB150	**ACCIAIO** / steel
650	F 650 GS / PD	1999	2007	22	755	134	146	102	R13	HB150	**ACCIAIO** / steel
650	F 650 / ST	1996	2000	22	755	134	146	102	BMW169	HB151	**ACCIAIO** / steel
650	F 650 CS	2000	2005	22	755	134	146	102	E650C	HB151	**ACCIAIO** / steel
650	F 650 CS	2000	2005	22	755	134	146	102	K14	HB151	**ACCIAIO** / steel
650	F 650 GS / PD	1999	2007	22	755	134	146	102	E650G	HB151	**ACCIAIO** / steel
650	F 650 GS / PD	1999	2007	22	755	134	146	102	R13	HB151	**ACCIAIO** / steel
800	F 800 ST	2004	2012	22	750	132	130	113	E8ST	HB175	**ALLUMINIO** / aluminium
800	F 800 GS	2006	2012	22	755	134	146	102	E8GS	HB152	**ALLUMINIO** / aluminium
800	F 800 ST	2004	2012	22	855	101	175	91	E8ST	HB174	**ALLUMINIO** / aluminium
800	F 800 GS	2006	2012	22	820	87	145	75	E8GS	HB167	**ALLUMINIO** / aluminium
800	F 800 GS	2006	2012	22	755	134	146	102	E8GS	HB150	**ACCIAIO** / steel
800	F 800 GS	2006	2012	22	755	134	146	102	E8GS	HB151	**ACCIAIO** / steel
800	F 800 ST	2004	2012	22	750	132	130	113	E8ST	HB162	**ACCIAIO** / steel
800	F 800 ST	2004	2012	22	750	132	130	113	E8ST	HB163	**ACCIAIO** / steel
850	R 850 R	1994	2002	22	750	132	130	113	BMW 259-R21	HB175	**ALLUMINIO** / aluminium
850	R 850 R	1994	2002	22	755	134	146	102	BMW259	HB152	**ALLUMINIO** / aluminium
850	R 850 R	1994	2002	22	755	134	146	102	R11R	HB152	**ALLUMINIO** / aluminium
850	R 850 R	1994	2002	22	755	134	146	102	R21	HB152	**ALLUMINIO** / aluminium
850	R 850 R	1994	2002	22	820	87	145	75	BMW259	HB167	**ALLUMINIO** / aluminium
850	R 850 R	1994	2002	22	820	87	145	75	R11R	HB167	**ALLUMINIO** / aluminium
850	R 850 R	1994	2002	22	820	87	145	75	R21	HB167	**ALLUMINIO** / aluminium
850	R 850 R	1994	2002	22	755	134	146	102	BMW259	HB150	**ACCIAIO** / steel
850	R 850 R	1994	2002	22	755	134	146	102	R11R	HB150	**ACCIAIO** / steel
850	R 850 R	1994	2002	22	755	134	146	102	R21	HB150	**ACCIAIO** / steel
850	R 850 R	1994	2002	22	755	134	146	102	BMW259	HB151	**ACCIAIO** / steel
850	R 850 R	1994	2002	22	755	134	146	102	R11R	HB151	**ACCIAIO** / steel
850	R 850 R	1994	2002	22	755	134	146	102	R21	HB151	**ACCIAIO** / steel
850	R 850 R	1994	2002	22	750	132	130	113	BMW 259	HB162	**ACCIAIO** / steel
850	R 850 R	1994	2002	22	750	132	130	113	R21	HB162	**ACCIAIO** / steel
850	R 850 R	1994	2002	22	750	132	130	113	BMW 259	HB163	**ACCIAIO** / steel
850	R 850 R	1994	2002	22	750	132	130	113	R21	HB163	**ACCIAIO** / steel
1100	R 1100 R	1993	2001	22	750	132	130	113	BMW 259	HB175	**ALLUMINIO** / aluminium
1100	R 1100 R	1993	2001	22	755	134	146	102	BMW259	HB152	**ALLUMINIO** / aluminium
1100	R 1100 R	1993	2001	22	755	134	146	102	R11R	HB152	**ALLUMINIO** / aluminium
1100	R 1100 R	1993	2001	22	820	87	145	75	BMW259	HB167	**ALLUMINIO** / aluminium
1100	R 1100 R	1993	2001	22	820	87	145	75	R11R	HB167	**ALLUMINIO** / aluminium
1100	R 1100 R	1993	2001	22	755	134	146	102	BMW259	HB150	**ACCIAIO** / steel
1100	R 1100 R	1993	2001	22	755	134	146	102	R11R	HB150	**ACCIAIO** / steel
1100	R 1100 R	1993	2001	22	755	134	146	102	BMW259	HB151	**ACCIAIO** / steel
1100	R 1100 R	1993	2001	22	755	134	146	102	R11R	HB151	**ACCIAIO** / steel
1100	R 1100 R	1993	2001	22	750	132	130	113	BMW 259	HB162	**ACCIAIO** / steel

ACCOSSATO

STREET RACING

INDICE ANALITICO MANUBRI / handlebars index

CC	MODELLO Model	ANNI / years DA From	A To	Ø	QUOTE / Dimensions A	B	C	D	TELAIO Chassis	CODICE Reference	MATERIALE Raw material
1100	R 1100 R	1993	2001	22	750	132	130	113	BMW 259	HB163	ACCIAIO / steel
1100	R1100 S	1998	2001	22	750	132	130	113	R2S	HB156	ACCIAIO / steel
1100	R1100 S	2001	2004	22	750	132	130	113	R2S	HB156	ACCIAIO / steel
1100	R1100 S	2004	2006	22	750	132	130	113	R11S	HB156	ACCIAIO / steel
1100	R 1100 S Boxer cup replica	2003	2004	22	750	132	130	113	R2S	HB156	ACCIAIO / steel
1100	R 1100 S Boxer cup replica	2004	2006	22	750	132	130	113	R11S	HB156	ACCIAIO / steel
1150	R 1150 R	1999	2006	22	750	132	130	113	R21	HB175	ALLUMINIO / aluminium
1150	R 1150 R / Rockster	2002	2005	22	755	134	146	102	R21	HB152	ALLUMINIO / aluminium
1150	R 1150 GS / PD	1998	2003	22	755	134	146	102	R21	HB152	ALLUMINIO / aluminium
1150	R 1150 R / Rockster	2002	2005	22	820	87	145	75	R21	HB167	ALLUMINIO / aluminium
1150	R 1150 GS / PD	1998	2003	22	820	87	145	75	R21	HB167	ALLUMINIO / aluminium
1150	R 1150 R / Rockster	2002	2005	22	755	134	146	102	R21	HB150	ACCIAIO / steel
1150	R 1150 GS / PD	1998	2003	22	755	134	146	102	R21	HB150	ACCIAIO / steel
1150	R 1150 R / Rockster	2002	2005	22	755	134	146	102	R21	HB151	ACCIAIO / steel
1150	R 1150 GS / PD	1998	2003	22	755	134	146	102	R21	HB151	ACCIAIO / steel
1150	R 1150 R	1999	2006	22	750	132	130	113	R21	HB162	ACCIAIO / steel
1150	R 1150 R	1999	2006	22	750	132	130	113	R21	HB163	ACCIAIO / steel
1150	R1150R	2000	2004	22	750	132	130	113	R21	HB156	ACCIAIO / steel
1150	R1150R	2004	2006	22	750	132	130	113	R11R	HB156	ACCIAIO / steel
1150	R1150R Rockster	2003	2004	22	750	132	130	113	R21	HB156	ACCIAIO / steel
1150	R1150R Rockster	2004	2006	22	750	132	130	113	R11R	HB156	ACCIAIO / steel
1170	HP 2 Megamoto	2006	2012	22	755	134	146	102	RHP2	HB152	ALLUMINIO / aluminium
1170	HP 2 Enduro	2004	2006	22	755	134	146	102	RHP2	HB152	ALLUMINIO / aluminium
1200	R 1200 R	2005	2010	22	755	134	146	102	R1ST	HB152	ALLUMINIO / aluminium
1200	R 1200 GS / PD / Adventure	2002	2007	22	755	134	146	102	R12	HB152	ALLUMINIO / aluminium
1200	R 1200 R	2005	2010	22	820	87	145	75	R1ST	HB167	ALLUMINIO / aluminium
1200	R 1200 GS / PD / Adventure	2002	2007	22	820	87	145	75	R12	HB167	ALLUMINIO / aluminium
1200	R 1200 R	2005	2010	22	755	134	146	102	R1ST	HB150	ACCIAIO / steel
1200	R 1200 GS / PD / Adventure	2002	2007	22	755	134	146	102	R12	HB150	ACCIAIO / steel
1200	R 1200 R	2005	2010	22	755	134	146	102	R1ST	HB151	ACCIAIO / steel
1200	R 1200 GS / PD / Adventure	2002	2007	22	755	134	146	102	R12	HB151	ACCIAIO / steel
1200	R1200R	2006	2016	22	750	132	130	113	R1ST	HB156	ACCIAIO / steel
BOMBARDIER											
650	DS 650, Baja X	2007	2013	22	750	132	130	113	B	HB175	ALLUMINIO / aluminium
650	DS 650, Baja X	2007	2013	22	750	132	130	113	B	HB162	ACCIAIO / steel
650	DS 650, Baja X	2007	2013	22	750	132	130	113	B	HB163	ACCIAIO / steel
BUELL											
984	XB9S Lightning	2003	2004	22	755	134	146	102	XB1	HB152	ALLUMINIO / aluminium
984	XB9S Lightning	2003	2004	22	820	87	145	75	XB1	HB167	ALLUMINIO / aluminium
984	XB9S Lightning	2003	2004	22	755	134	146	102	XB1	HB150	ACCIAIO / steel
984	XB9S Lightning	2003	2004	22	755	134	146	102	XB1	HB151	ACCIAIO / steel
1200	S1 Lightning 1200	1999	2002	22	755	134	146	102	EB1	HB152	ALLUMINIO / aluminium
1200	XB12S Lightning	2002	2011	22	755	134	146	102	XB1	HB152	ALLUMINIO / aluminium
1200	S1 Lightning 1200	1999	2002	22	820	87	145	75	EB1	HB167	ALLUMINIO / aluminium
1200	XB12S Lightning	2002	2011	22	820	87	145	75	XB1	HB167	ALLUMINIO / aluminium
1200	S1 Lightning 1200	1999	2002	22	755	134	146	102	EB1	HB150	ACCIAIO / steel
1200	XB12S Lightning	2002	2011	22	755	134	146	102	XB1	HB150	ACCIAIO / steel
1200	S1 Lightning 1200	1999	2002	22	755	134	146	102	EB1	HB151	ACCIAIO / steel
1200	XB12S Lightning	2002	2011	22	755	134	146	102	XB1	HB151	ACCIAIO / steel
CAGIVA											
600	Canyon 600	1995	1998	22	755	134	146	102	G	HB152	ALLUMINIO / aluminium
600	Canyon 600	1995	1998	22	820	87	145	75	G	HB167	ALLUMINIO / aluminium
600	Canyon 600	1995	1998	22	755	134	146	102	G	HB150	ACCIAIO / steel
600	Canyon 600	1995	1998	22	755	134	146	102	G	HB151	ACCIAIO / steel
900	Gran Canyon 900 i.e.	1998	2000	22	755	134	146	102	M3	HB152	ALLUMINIO / aluminium
900	Gran Canyon 900 i.e.	1998	2000	22	820	87	145	75	M3	HB167	ALLUMINIO / aluminium
900	Gran Canyon 900 i.e.	1998	2000	22	755	134	146	102	M3	HB150	ACCIAIO / steel
900	Gran Canyon 900 i.e.	1998	2000	22	755	134	146	102	M3	HB151	ACCIAIO / steel

STREET RACING

INDICE ANALITICO MANUBRI / handlebars index

CC	MODELLO Model	ANNI / years DA From	A To	Ø	QUOTE / Dimensions A	B	C	D	TELAIO Chassis	CODICE Reference	MATERIALE Raw material
					DUCATI						
400	Monster 400	2000	2003	22	750	132	130	113	M3	HB175	ALLUMINIO / aluminium
400	Monster 400	2000	2003	22	755	134	146	102	M3	HB152	ALLUMINIO / aluminium
400	Montser 400 / 400 i.e.	2004	2008	22	755	134	146	102	M4	HB152	ALLUMINIO / aluminium
400	Monster 400	2000	2003	22	855	101	175	91	M3	HB174	ALLUMINIO / aluminium
400	Monster 400	2000	2003	22	820	87	145	75	M3	HB167	ALLUMINIO / aluminium
400	Montser 400 / 400 i.e.	2004	2008	22	820	87	145	75	M4	HB167	ALLUMINIO / aluminium
400	Monster 400	2000	2003	22	755	134	146	102	M3	HB150	ACCIAIO / steel
400	Montser 400 / 400 i.e.	2004	2008	22	755	134	146	102	M4	HB150	ACCIAIO / steel
400	Monster 400	2000	2003	22	755	134	146	102	M3	HB151	ACCIAIO / steel
400	Montser 400 / 400 i.e.	2004	2008	22	755	134	146	102	M4	HB151	ACCIAIO / steel
400	Monster 400	2000	2003	22	750	132	130	113	M3	HB162	ACCIAIO / steel
400	Monster 400	2000	2003	22	750	132	130	113	M3	HB163	ACCIAIO / steel
600	Monster 600	1993	1998	22	750	132	130	113	M	HB175	ALLUMINIO / aluminium
600	Monster 600 / Dark	1998	1998	22	750	132	130	113	M3	HB175	ALLUMINIO / aluminium
600	Monster 600	1993	1998	22	755	134	146	102	M	HB152	ALLUMINIO / aluminium
600	Monster 600	1999	2001	22	755	134	146	102	M3	HB152	ALLUMINIO / aluminium
600	Monster 600	1993	1998	22	855	101	175	91	M	HB174	ALLUMINIO / aluminium
600	Monster 600 / Dark	1999	1999	22	855	101	175	91	M3	HB174	ALLUMINIO / aluminium
600	MONSTER 600	1993	2001	22	730	102	90	117		HB169	ALLUMINIO / aluminium
600	Monster 600	1993	1998	22	820	87	145	75	M	HB167	ALLUMINIO / aluminium
600	Monster 600	1999	2001	22	820	87	145	75	M3	HB167	ALLUMINIO / aluminium
600	Monster 600	1993	1998	22	755	134	146	102	M	HB150	ACCIAIO / steel
600	Monster 600	1999	2001	22	755	134	146	102	M3	HB150	ACCIAIO / steel
600	Monster 600	1993	1998	22	755	134	146	102	M	HB151	ACCIAIO / steel
600	Monster 600	1999	2001	22	755	134	146	102	M3	HB151	ACCIAIO / steel
600	Monster 600	1993	1998	22	750	132	130	113	M	HB162	ACCIAIO / steel
600	Monster 600 / Dark	1998	1998	22	750	132	130	113	M3	HB162	ACCIAIO / steel
600	Monster 600	1993	1998	22	750	132	130	113	M	HB163	ACCIAIO / steel
600	Monster 600 / Dark	1998	1998	22	750	132	130	113	M3	HB163	ACCIAIO / steel
600	MONSTER	1993	2001	22	746	40	100	110		HB158	ACCIAIO / steel
620	Monster 620 / Dark	2005	2006	22	750	132	130	113	M4	HB175	ALLUMINIO / aluminium
620	Monster 620 / 620 i.e. / Dark	2002	2006	22	755	134	146	102	M4	HB152	ALLUMINIO / aluminium
620	Multistrada 620	2006	2006	22	755	134	146	102	A1	HB152	ALLUMINIO / aluminium
620	Monster 620 / Dark	2002	2005	22	855	101	175	91	M4	HB174	ALLUMINIO / aluminium
620	MONSTER 620	2002	2006	22	730	102	90	117		HB169	ALLUMINIO / aluminium
620	Monster 620 / 620 i.e. / Dark	2002	2006	22	820	87	145	75	M4	HB167	ALLUMINIO / aluminium
620	Multistrada 620	2006	2006	22	820	87	145	75	A1	HB167	ALLUMINIO / aluminium
620	Monster 620 / 620 i.e. / Dark	2002	2006	22	755	134	146	102	M4	HB150	ACCIAIO / steel
620	Multistrada 620	2006	2006	22	755	134	146	102	A1	HB150	ACCIAIO / steel
620	Monster 620 / 620 i.e. / Dark	2002	2006	22	755	134	146	102	M4	HB151	ACCIAIO / steel
620	Multistrada 620	2006	2006	22	755	134	146	102	A1	HB151	ACCIAIO / steel
620	Monster 620 / Dark	2005	2006	22	750	132	130	113	M4	HB162	ACCIAIO / steel
620	Monster 620 / Dark	2005	2006	22	750	132	130	113	M4	HB163	ACCIAIO / steel
620	MONSTER	2002	2006	22	746	40	100	110		HB158	ACCIAIO / steel
695	Monster 695	2007	2008	22	750	132	130	113	M4	HB175	ALLUMINIO / aluminium
695	Monster 695	2007	2008	22	755	134	146	102	M4	HB152	ALLUMINIO / aluminium
695	Monster 695	2007	2008	22	855	101	175	91	M4	HB174	ALLUMINIO / aluminium
695	Monster 695	2007	2008	22	820	87	145	75	M4	HB167	ALLUMINIO / aluminium
695	Monster 695	2007	2008	22	755	134	146	102	M4	HB150	ACCIAIO / steel
695	Monster 695	2007	2008	22	755	134	146	102	M4	HB151	ACCIAIO / steel
695	Monster 695	2007	2008	22	750	132	130	113	M4	HB162	ACCIAIO / steel
695	Monster 695	2007	2008	22	750	132	130	113	M4	HB163	ACCIAIO / steel
696	Monster 696	2010	2014	22	750	132	130	113	M5	HB162	ACCIAIO / steel
696	Monster 696	2010	2014	22	750	132	130	113	M5	HB163	ACCIAIO / steel
700	Monster 696	2010	2014	22	750	132	130	113	M5	HB175	ALLUMINIO / aluminium
700	Monster 696	2010	2012	22	755	134	146	102	M5	HB152	ALLUMINIO / aluminium
700	Monster 696	2008	2012	22	855	101	175	91	M5	HB174	ALLUMINIO / aluminium
700	Monster 696	2010	2012	22	820	87	145	75	M5	HB167	ALLUMINIO / aluminium
700	Monster 696	2010	2012	22	755	134	146	102	M5	HB150	ACCIAIO / steel

ACCOSSATO

STREET RACING

INDICE ANALITICO MANUBRI / handlebars index

CC	MODELLO Model	ANNI / years DA From	A To	Ø	QUOTE / Dimensions A	B	C	D	TELAIO Chassis	CODICE Reference	MATERIALE Raw material
700	Monster 696	2010	2012	22	755	134	146	102	M5	HB151	ACCIAIO / steel
750	Monster 750 / Dark	1999	1999	22	750	132	130	113	M	HB175	ALLUMINIO / aluminium
750	Monster 750 i.e.	2002	2002	22	750	132	130	113	M4	HB175	ALLUMINIO / aluminium
750	Monster 750	1999	2002	22	755	134	146	102	M	HB152	ALLUMINIO / aluminium
750	Monster 750	1996	1999	22	755	134	146	102	M1	HB152	ALLUMINIO / aluminium
750	Monster 750	2002	2002	22	755	134	146	102	M4	HB152	ALLUMINIO / aluminium
750	Monster 750 / Dark	1999	1999	22	855	101	175	91	M	HB174	ALLUMINIO / aluminium
750	Monster 750 i.e.	1996	2002	22	855	101	175	91	M4	HB174	ALLUMINIO / aluminium
750	MONSTER 750	1996	2002	22	730	102	90	117		HB169	ALLUMINIO / aluminium
750	Monster 750	1996	1999	22	820	87	145	75	M1	HB167	ALLUMINIO / aluminium
750	Monster 750	2002	2002	22	820	87	145	75	M4	HB167	ALLUMINIO / aluminium
750	Monster 750	1996	1999	22	755	134	146	102	M1	HB150	ACCIAIO / steel
750	Monster 750	2002	2002	22	755	134	146	102	M4	HB150	ACCIAIO / steel
750	Monster 750	1996	1999	22	755	134	146	102	M1	HB151	ACCIAIO / steel
750	Monster 750	2002	2002	22	755	134	146	102	M4	HB151	ACCIAIO / steel
750	Monster 750 / Dark	1999	1999	22	750	132	130	113	M	HB162	ACCIAIO / steel
750	Monster 750 i.e.	2002	2002	22	750	132	130	113	M4	HB162	ACCIAIO / steel
750	Monster 750 / Dark	1999	1999	22	750	132	130	113	M	HB163	ACCIAIO / steel
750	Monster 750 i.e.	2002	2002	22	750	132	130	113	M4	HB163	ACCIAIO / steel
800	Hypermotard 796	2010	2012	22	750	132	130	113	B1	HB175	ALLUMINIO / aluminium
800	Monster 800 i.e. S,Dark	2005	2007	22	750	132	130	113	M4	HB175	ALLUMINIO / aluminium
800	Monster 800 S2R, Dark	2005	2007	22	750	132	130	113	M4	HB175	ALLUMINIO / aluminium
800	Monster 800 / S2R	2005	2006	22	755	134	146	102	M4	HB152	ALLUMINIO / aluminium
800	Hypermotard 796	2010	2012	22	855	101	175	91	B1	HB174	ALLUMINIO / aluminium
800	Monster 800 i.e. S,Dark	2003	2006	22	855	101	175	91	M4	HB174	ALLUMINIO / aluminium
800	Monster 800 S2R, Dark	2003	2006	22	855	101	175	91	M4	HB174	ALLUMINIO / aluminium
800	MONSTER 800	2003	2004	22	730	137	95	92		HB170	ALLUMINIO / aluminium
800	Monster 800 / S2R	2005	2006	22	820	87	145	75	M4	HB167	ALLUMINIO / aluminium
800	Monster 800 / S2R	2005	2006	22	755	134	146	102	M4	HB150	ACCIAIO / steel
800	Monster 800 / S2R	2005	2006	22	755	134	146	102	M4	HB151	ACCIAIO / steel
800	Hypermotard 796	2010	2012	22	750	132	130	113	B1	HB162	ACCIAIO / steel
800	Monster 800 i.e. S,Dark	2005	2007	22	750	132	130	113	M4	HB162	ACCIAIO / steel
800	Monster 800 S2R, Dark	2005	2007	22	750	132	130	113	M4	HB162	ACCIAIO / steel
800	Hypermotard 796	2010	2012	22	750	132	130	113	B1	HB163	ACCIAIO / steel
800	Monster 800 i.e. S,Dark	2005	2007	22	750	132	130	113	M4	HB163	ACCIAIO / steel
800	Monster 800 S2R, Dark	2005	2007	22	750	132	130	113	M4	HB163	ACCIAIO / steel
900	Monster 900	2001	2002	22	750	132	130	113	M2	HB175	ALLUMINIO / aluminium
900	Monster 900	1993	1999	22	750	132	130	113	M	HB175	ALLUMINIO / aluminium
900	Monster 900 i.e. ,Dark	1999	1999	22	750	132	130	113	M4	HB175	ALLUMINIO / aluminium
900	Monster 916 S4	2001	2003	22	750	132	130	113	M4	HB175	ALLUMINIO / aluminium
900	Monster 900	1993	1999	22	755	134	146	102	M	HB152	ALLUMINIO / aluminium
900	Monster 900	2000	2002	22	755	134	146	102	M2	HB152	ALLUMINIO / aluminium
900	Monster 900 / S2R 1000 / S4-R / S4Rs	1992	2017	22	755	134	146	102	M4	HB152	ALLUMINIO / aluminium
900	Monster 900	2000	2002	22	855	101	175	91	M2	HB174	ALLUMINIO / aluminium
900	Monster 900	1993	1999	22	855	101	175	91	M	HB174	ALLUMINIO / aluminium
900	Monster 900 i.e. ,Dark	1999	1999	22	855	101	175	91	M4	HB174	ALLUMINIO / aluminium
900	Monster 916 S4	2001	2003	22	855	101	175	91	M4	HB174	ALLUMINIO / aluminium
900	MONSTER 900	1993	2002	22	730	137	95	92		HB170	ALLUMINIO / aluminium
900	Monster 900	1993	1999	22	820	87	145	75	M	HB167	ALLUMINIO / aluminium
900	Monster 900	2000	2002	22	820	87	145	75	M2	HB167	ALLUMINIO / aluminium
900	Monster 900 / S2R 1000 / S4-R / S4Rs	1992	2017	22	820	87	145	75	M4	HB167	ALLUMINIO / aluminium
900	Monster 900	1993	1999	22	755	134	146	102	M	HB150	ACCIAIO / steel
900	Monster 900	2000	2002	22	755	134	146	102	M2	HB150	ACCIAIO / steel
900	Monster 900 / S2R 1000 / S4-R / S4Rs	1992	2017	22	755	134	146	102	M4	HB150	ACCIAIO / steel
900	Monster 900	1993	1999	22	755	134	146	102	M	HB151	ACCIAIO / steel
900	Monster 900	2000	2002	22	755	134	146	102	M2	HB151	ACCIAIO / steel
900	Monster 900 / S2R 1000 / S4-R / S4Rs	1992	2017	22	755	134	146	102	M4	HB151	ACCIAIO / steel
900	Monster 900	2001	2002	22	750	132	130	113	M2	HB162	ACCIAIO / steel
900	Monster 900	1993	1999	22	750	132	130	113	M	HB162	ACCIAIO / steel
900	Monster 900 i.e. ,Dark	1999	1999	22	750	132	130	113	M4	HB162	ACCIAIO / steel
900	Monster 916 S4	2001	2003	22	750	132	130	113	M4	HB162	ACCIAIO / steel

STREET RACING

INDICE ANALITICO MANUBRI / handlebars index

CC	MODELLO Model	ANNI / years DA From	A To	Ø	QUOTE / Dimensions A	B	C	D	TELAIO Chassis	CODICE Reference	MATERIALE Raw material
900	Monster 900	2001	2002	22	750	132	130	113	M2	HB163	ACCIAIO / steel
900	Monster 900	1993	1999	22	750	132	130	113	M	HB163	ACCIAIO / steel
900	Monster 900 i.e. ‚Dark	1999	1999	22	750	132	130	113	M4	HB163	ACCIAIO / steel
900	Monster 916 S4	2001	2003	22	750	132	130	113	M4	HB163	ACCIAIO / steel
1000	Monster 1000 Dark	2003	2005	22	750	132	130	113	M4	HB175	ALLUMINIO / aluminium
1000	Monster 1000 i.e.	2003	2005	22	750	132	130	113	M4	HB175	ALLUMINIO / aluminium
1000	Monster 1000 S	2005	2005	22	750	132	130	113	M4	HB175	ALLUMINIO / aluminium
1000	Monster 1000 S2R	2006	2008	22	750	132	130	113	M4	HB175	ALLUMINIO / aluminium
1000	GT 1000 / Touring	2008	2010	22	755	134	146	102	C1	HB152	ALLUMINIO / aluminium
1000	Monster 1000	2004	2008	22	755	134	146	102	M4	HB152	ALLUMINIO / aluminium
1000	Multistrada 1000 DS	2003	2006	22	755	134	146	102	A1	HB152	ALLUMINIO / aluminium
1000	Multistrada 1000 DS	2003	2006	22	755	134	146	102	A1	HB152	ALLUMINIO / aluminium
1000	Monster 1000 Dark	2003	2005	22	855	101	175	91	M4	HB174	ALLUMINIO / aluminium
1000	Monster 1000 i.e.	2003	2005	22	855	101	175	91	M4	HB174	ALLUMINIO / aluminium
1000	Monster 1000 S	2005	2005	22	855	101	175	91	M4	HB174	ALLUMINIO / aluminium
1000	Monster 1000 S2R	2006	2007	22	855	101	175	91	M4	HB174	ALLUMINIO / aluminium
1000	GT 1000 / Touring	2008	2010	22	820	87	145	75	C1	HB167	ALLUMINIO / aluminium
1000	Monster 1000	2004	2008	22	820	87	145	75	M4	HB167	ALLUMINIO / aluminium
1000	Multistrada 1000 DS	2003	2006	22	820	87	145	75	A1	HB167	ALLUMINIO / aluminium
1000	Multistrada 1000 DS	2003	2006	22	820	87	145	75	A1	HB167	ALLUMINIO / aluminium
1000	GT 1000 / Touring	2008	2010	22	755	134	146	102	C1	HB150	ACCIAIO / steel
1000	Monster 1000	2004	2008	22	755	134	146	102	M4	HB150	ACCIAIO / steel
1000	Multistrada 1000 DS	2003	2006	22	755	134	146	102	A1	HB150	ACCIAIO / steel
1000	Multistrada 1000 DS	2003	2006	22	755	134	146	102	A1	HB150	ACCIAIO / steel
1000	GT 1000 / Touring	2008	2010	22	755	134	146	102	C1	HB151	ACCIAIO / steel
1000	Monster 1000	2004	2008	22	755	134	146	102	M4	HB151	ACCIAIO / steel
1000	Multistrada 1000 DS	2003	2006	22	755	134	146	102	A1	HB151	ACCIAIO / steel
1000	Multistrada 1000 DS	2003	2006	22	755	134	146	102	A1	HB151	ACCIAIO / steel
1000	Monster 1000 Dark	2003	2005	22	750	132	130	113	M4	HB162	ACCIAIO / steel
1000	Monster 1000 i.e.	2003	2005	22	750	132	130	113	M4	HB162	ACCIAIO / steel
1000	Monster 1000 S	2005	2005	22	750	132	130	113	M4	HB162	ACCIAIO / steel
1000	Monster 1000 S2R	2006	2008	22	750	132	130	113	M4	HB162	ACCIAIO / steel
1000	Monster 1000 Dark	2003	2005	22	750	132	130	113	M4	HB163	ACCIAIO / steel
1000	Monster 1000 i.e.	2003	2005	22	750	132	130	113	M4	HB163	ACCIAIO / steel
1000	Monster 1000 S	2005	2005	22	750	132	130	113	M4	HB163	ACCIAIO / steel
1000	Monster 1000 S2R	2006	2008	22	750	132	130	113	M4	HB163	ACCIAIO / steel
1099	Streetfighter / S	2009	2014	22	755	134	146	102	H7	HB152	ALLUMINIO / aluminium
1099	Streetfighter / S	2009	2014	22	820	87	145	75	H7	HB167	ALLUMINIO / aluminium
1099	Streetfighter / S	2009	2014	22	755	134	146	102	H7	HB150	ACCIAIO / steel
1099	Streetfighter / S	2009	2014	22	755	134	146	102	H7	HB151	ACCIAIO / steel
1100	Monster 1100 / S	2009	2010	22	755	134	146	102	M5	HB152	ALLUMINIO / aluminium
1100	Multistrada 1100	2007	2009	22	755	134	146	102	A1	HB152	ALLUMINIO / aluminium
1100	Hypermotard 1100 / S	2008	2012	22	755	134	146	102	B1	HB152	ALLUMINIO / aluminium
1100	Monster 1100 / S	2009	2010	22	820	87	145	75	M5	HB167	ALLUMINIO / aluminium
1100	Multistrada 1100	2007	2009	22	820	87	145	75	A1	HB167	ALLUMINIO / aluminium
1100	Hypermotard 1100 / S	2008	2012	22	820	87	145	75	B1	HB167	ALLUMINIO / aluminium
1100	Monster 1100 / S	2009	2010	22	755	134	146	102	M5	HB150	ACCIAIO / steel
1100	Multistrada 1100	2007	2009	22	755	134	146	102	A1	HB150	ACCIAIO / steel
1100	Hypermotard 1100 / S	2008	2012	22	755	134	146	102	B1	HB150	ACCIAIO / steel
1100	Monster 1100 / S	2009	2010	22	755	134	146	102	M5	HB151	ACCIAIO / steel
1100	Multistrada 1100	2007	2009	22	755	134	146	102	A1	HB151	ACCIAIO / steel
1100	Hypermotard 1100 / S	2008	2012	22	755	134	146	102	B1	HB151	ACCIAIO / steel
GAS GAS											
50	Wild HP 50	2004	2004	22	750	132	130	113	Wild HP 50	HB175	ALLUMINIO / aluminium
50	Wild HP 50	2004	2004	22	750	132	130	113	Wild HP 50	HB162	ACCIAIO / steel
50	Wild HP 50	2004	2004	22	750	132	130	113	Wild HP 50	HB163	ACCIAIO / steel
300	Wild HP 300	2005	2003	22	750	132	130	113	Wild HP 300	HB175	ALLUMINIO / aluminium
300	Wild HP 300	2005	2003	22	750	132	130	113	Wild HP 300	HB162	ACCIAIO / steel
300	Wild HP 300	2005	2003	22	750	132	130	113	Wild HP 300	HB163	ACCIAIO / steel
450	Wild HP 450	2004	2007	22	750	132	130	113	Wild HP 450	HB175	ALLUMINIO / aluminium

ACCOSSATO

STREET RACING

INDICE ANALITICO MANUBRI / handlebars index

CC	MODELLO Model	ANNI / years DA From	A To	Ø	QUOTE / Dimensions A	B	C	D	TELAIO Chassis	CODICE Reference	MATERIALE Raw material
450	Wild HP 450	2004	2007	22	750	132	130	113	Wild HP 450	HB162	ACCIAIO / steel
450	Wild HP 450	2004	2007	22	750	132	130	113	Wild HP 450	HB163	ACCIAIO / steel

HONDA

125	CBF 125	2009	2016	22	750	132	130	113	JC 40	HB175	ALLUMINIO / aluminium
125	XL 125 Varadero	2001	2009	22	750	132	130	113	JC 32	HB175	ALLUMINIO / aluminium
125	Varadero 125	2000	2011	22	755	134	146	102	JC32	HB152	ALLUMINIO / aluminium
125	CBF 125	2009	2016	22	855	101	175	91	JC 40	HB174	ALLUMINIO / aluminium
125	Varadero 125	2000	2011	22	820	87	145	75	JC32	HB167	ALLUMINIO / aluminium
125	Varadero 125	2000	2011	22	755	134	146	102	JC32	HB150	ACCIAIO / steel
125	Varadero 125	2000	2011	22	755	134	146	102	JC32	HB151	ACCIAIO / steel
125	CBF 125	2009	2016	22	750	132	130	113	JC 40	HB162	ACCIAIO / steel
125	XL 125 Varadero	2001	2009	22	750	132	130	113	JC 32	HB162	ACCIAIO / steel
125	CBF 125	2009	2016	22	750	132	130	113	JC 40	HB163	ACCIAIO / steel
125	XL 125 Varadero	2001	2009	22	750	132	130	113	JC 32	HB163	ACCIAIO / steel
250	CB 250 Two fifty	1999	2001	22	750	132	130	113	MC 26	HB175	ALLUMINIO / aluminium
250	CB 250 Two Fifty	1999	2001	22	755	134	146	102	MC26	HB152	ALLUMINIO / aluminium
250	CB 250 Two fifty	1999	2001	22	855	101	175	91	MC 26	HB174	ALLUMINIO / aluminium
250	CB 250 Two Fifty	1999	2001	22	820	87	145	75	MC26	HB167	ALLUMINIO / aluminium
250	CB 250 Two Fifty	1999	2001	22	755	134	146	102	MC26	HB150	ACCIAIO / steel
250	CB 250 Two Fifty	1999	2001	22	755	134	146	102	MC26	HB151	ACCIAIO / steel
250	CB 250 Two fifty	1999	2001	22	750	132	130	113	MC 26	HB162	ACCIAIO / steel
250	CB 250 Two fifty	1999	2001	22	750	132	130	113	MC 26	HB163	ACCIAIO / steel
400	CB 400 N	1979	1983	22	750	132	130	113	CM400N	HB175	ALLUMINIO / aluminium
400	CB 400 N	1979	1983	22	755	134	146	102	CM400N	HB152	ALLUMINIO / aluminium
400	CB 400 N	1979	1983	22	855	101	175	91	CM400N	HB174	ALLUMINIO / aluminium
400	CB 400 N	1979	1983	22	820	87	145	75	CM400N	HB167	ALLUMINIO / aluminium
400	CB 400 N	1979	1983	22	755	134	146	102	CM400N	HB150	ACCIAIO / steel
400	CB 400 N	1979	1983	22	755	134	146	102	CM400N	HB151	ACCIAIO / steel
400	CB 400 N	1979	1983	22	750	132	130	113	CM400N	HB162	ACCIAIO / steel
400	CB 400 N	1979	1983	22	750	132	130	113	CM400N	HB163	ACCIAIO / steel
500	CB 500	1994	1994	22	750	132	130	113	PC 26-PC32	HB175	ALLUMINIO / aluminium
500	CBF 500	2004	2007	22	750	132	130	113	PC 39	HB175	ALLUMINIO / aluminium
500	CB 500	1994	1994	22	755	134	146	102	PC26	HB152	ALLUMINIO / aluminium
500	CB 500	1994	1994	22	755	134	146	102	PC32	HB152	ALLUMINIO / aluminium
500	CBF 500	2004	2007	22	755	134	146	102	PC39	HB152	ALLUMINIO / aluminium
500	CB 500	1994	1994	22	855	101	175	91	PC 26	HB174	ALLUMINIO / aluminium
500	CB 500	1994	1994	22	855	101	175	91	PC 32	HB174	ALLUMINIO / aluminium
500	CBF 500	2004	2007	22	855	101	175	91	PC 39	HB174	ALLUMINIO / aluminium
500	CB 500	1994	1994	22	820	87	145	75	PC26	HB167	ALLUMINIO / aluminium
500	CB 500	1994	1994	22	820	87	145	75	PC32	HB167	ALLUMINIO / aluminium
500	CBF 500	2004	2007	22	820	87	145	75	PC39	HB167	ALLUMINIO / aluminium
500	CB 500	1994	1994	22	755	134	146	102	PC26	HB150	ACCIAIO / steel
500	CB 500	1994	1994	22	755	134	146	102	PC32	HB150	ACCIAIO / steel
500	CBF 500	2004	2007	22	755	134	146	102	PC39	HB150	ACCIAIO / steel
500	CB 500	1994	1994	22	755	134	146	102	PC26	HB151	ACCIAIO / steel
500	CB 500	1994	1994	22	755	134	146	102	PC32	HB151	ACCIAIO / steel
500	CBF 500	2004	2007	22	755	134	146	102	PC39	HB151	ACCIAIO / steel
500	CB 500	1994	1994	22	750	132	130	113	PC 26	HB162	ACCIAIO / steel
500	CB 500	1994	1994	22	750	132	130	113	PC 32	HB162	ACCIAIO / steel
500	CBF 500	2004	2007	22	750	132	130	113	PC 39	HB162	ACCIAIO / steel
500	CB 500	1994	1994	22	750	132	130	113	PC 26	HB163	ACCIAIO / steel
500	CB 500	1994	1994	22	750	132	130	113	PC 32	HB163	ACCIAIO / steel
500	CBF 500	2004	2007	22	750	132	130	113	PC 39	HB163	ACCIAIO / steel
600	CB 600 Hornet	2001	2001	22	750	132	130	113	PC 34-PC36-PC41	HB175	ALLUMINIO / aluminium
600	CBF 600	2004	2005	22	750	132	130	113	PC 38	HB175	ALLUMINIO / aluminium
600	CBF 600	2009	2009	22	750	132	130	113	PC 43	HB175	ALLUMINIO / aluminium
600	XL 600 R	1983	1987	22	750	132	130	113	PD 03	HB175	ALLUMINIO / aluminium
600	CB 600 F Hornet	1998	2006	22	755	134	146	102	PC34	HB152	ALLUMINIO / aluminium
600	CB 600 F Hornet	1998	2006	22	755	134	146	102	PC34	HB152	ALLUMINIO / aluminium
600	CB 600 F Hornet	1998	2006	22	755	134	146	102	PC36	HB152	ALLUMINIO / aluminium

STREET RACING

INDICE ANALITICO MANUBRI / handlebars index

CC	MODELLO Model	ANNI / years DA From	A To	Ø	QUOTE / Dimensions A	B	C	D	TELAIO Chassis	CODICE Reference	MATERIALE Raw material
600	CB 600 F Hornet	1998	2006	22	755	134	146	102	PC41	HB152	ALLUMINIO / aluminium
600	CBF 600 / S	2007	2012	22	755	134	146	102	PC38	HB152	ALLUMINIO / aluminium
600	CBF 600 / S	2007	2012	22	755	134	146	102	PC43	HB152	ALLUMINIO / aluminium
600	Transalp	1987	1999	22	755	134	146	102	RD13	HB152	ALLUMINIO / aluminium
600	CB 600 Hornet	2001	2001	22	855	101	175	91	PC 34	HB174	ALLUMINIO / aluminium
600	CB 600 Hornet	2001	2001	22	855	101	175	91	PC 36	HB174	ALLUMINIO / aluminium
600	CB 600 Hornet	2001	2001	22	855	101	175	91	PC 41	HB174	ALLUMINIO / aluminium
600	CBF 600	2004	2005	22	855	101	175	91	PC 38	HB174	ALLUMINIO / aluminium
600	CBF 600	2009	2009	22	855	101	175	91	PC 43	HB174	ALLUMINIO / aluminium
600	XL 600 R	1983	1987	22	855	101	175	91	PD 03	HB174	ALLUMINIO / aluminium
600	XL 600 R	1983	1987	22	855	101	175	91	PD 03	HB174	ALLUMINIO / aluminium
600	HORNET 600	1998	2011	22	750	100	115	112		HB171	ALLUMINIO / aluminium
600	CB 600 F Hornet	1998	2006	22	820	87	145	75	PC34	HB167	ALLUMINIO / aluminium
600	CB 600 F Hornet	1998	2006	22	820	87	145	75	PC34	HB167	ALLUMINIO / aluminium
600	CB 600 F Hornet	1998	2006	22	820	87	145	75	PC36	HB167	ALLUMINIO / aluminium
600	CB 600 F Hornet	1998	2006	22	820	87	145	75	PC41	HB167	ALLUMINIO / aluminium
600	CBF 600 / S	2007	2012	22	820	87	145	75	PC38	HB167	ALLUMINIO / aluminium
600	CBF 600 / S	2007	2012	22	820	87	145	75	PC43	HB167	ALLUMINIO / aluminium
600	Transalp	1987	1999	22	820	87	145	75	RD13	HB167	ALLUMINIO / aluminium
600	CB 600 F Hornet	1998	2006	22	755	134	146	102	PC34	HB150	ACCIAIO / steel
600	CB 600 F Hornet	1998	2006	22	755	134	146	102	PC34	HB150	ACCIAIO / steel
600	CB 600 F Hornet	1998	2006	22	755	134	146	102	PC36	HB150	ACCIAIO / steel
600	CB 600 F Hornet	1998	2006	22	755	134	146	102	PC41	HB150	ACCIAIO / steel
600	CBF 600 / S	2007	2012	22	755	134	146	102	PC38	HB150	ACCIAIO / steel
600	CBF 600 / S	2007	2012	22	755	134	146	102	PC43	HB150	ACCIAIO / steel
600	Transalp	1987	1999	22	755	134	146	102	RD13	HB150	ACCIAIO / steel
600	CB 600 F Hornet	1998	2006	22	755	134	146	102	PC34	HB151	ACCIAIO / steel
600	CB 600 F Hornet	1998	2006	22	755	134	146	102	PC34	HB151	ACCIAIO / steel
600	CB 600 F Hornet	1998	2006	22	755	134	146	102	PC36	HB151	ACCIAIO / steel
600	CB 600 F Hornet	1998	2006	22	755	134	146	102	PC41	HB151	ACCIAIO / steel
600	CBF 600 / S	2007	2012	22	755	134	146	102	PC38	HB151	ACCIAIO / steel
600	CBF 600 / S	2007	2012	22	755	134	146	102	PC43	HB151	ACCIAIO / steel
600	Transalp	1987	1999	22	755	134	146	102	RD13	HB151	ACCIAIO / steel
600	CB 600 Hornet	2001	2001	22	750	132	130	113	PC 34	HB162	ACCIAIO / steel
600	CB 600 Hornet	2001	2001	22	750	132	130	113	PC 36	HB162	ACCIAIO / steel
600	CB 600 Hornet	2001	2001	22	750	132	130	113	PC 41	HB162	ACCIAIO / steel
600	CBF 600	2004	2005	22	750	132	130	113	PC 38	HB162	ACCIAIO / steel
600	CBF 600	2009	2009	22	750	132	130	113	PC 43	HB162	ACCIAIO / steel
600	XL 600 R	1983	1987	22	750	132	130	113	PD 03	HB162	ACCIAIO / steel
600	XL 600 R	1983	1987	22	750	132	130	113	PD 03	HB162	ACCIAIO / steel
600	CB 600 Hornet	2001	2001	22	750	132	130	113	PC 34	HB163	ACCIAIO / steel
600	CB 600 Hornet	2001	2001	22	750	132	130	113	PC 36	HB163	ACCIAIO / steel
600	CB 600 Hornet	2001	2001	22	750	132	130	113	PC 41	HB163	ACCIAIO / steel
600	CBF 600	2004	2005	22	750	132	130	113	PC 38	HB163	ACCIAIO / steel
600	CBF 600	2009	2009	22	750	132	130	113	PC 43	HB163	ACCIAIO / steel
600	XL 600 R	1983	1987	22	750	132	130	113	PD 03	HB163	ACCIAIO / steel
600	XL 600 R	1983	1987	22	750	132	130	113	PD 03	HB163	ACCIAIO / steel
600	HORNET	1998	2013	22	685	124	130	93		HB159	ACCIAIO / steel
600	HORNET	2007	2013	22	675	103	130	95		HB160	ACCIAIO / steel
600	HORNET	2007	2013	22	675	93	130	93		HB161	ACCIAIO / steel
650	CB 650 F	2014	2016	22	750	132	130	113	RC 75	HB175	ALLUMINIO / aluminium
650	NT 650 Deauville	1998	2005	22	750	132	130	113	RC 47	HB175	ALLUMINIO / aluminium
650	NTV 650	1988	1995	22	750	132	130	113	RC 33	HB175	ALLUMINIO / aluminium
650	NX 650 Dominator	1988	1989	22	750	132	130	113	RD 02-RD08	HB175	ALLUMINIO / aluminium
650	SLR 650	1999	1999	22	750	132	130	113	RD 09	HB175	ALLUMINIO / aluminium
650	FX 650 Vigor	1999	2002	22	755	134	146	102	RD09	HB152	ALLUMINIO / aluminium
650	NTV 650 Revere	1988	2001	22	755	134	146	102	RC33	HB152	ALLUMINIO / aluminium
650	NX 650 Dominator	1988	1989	22	755	134	146	102	RD08	HB152	ALLUMINIO / aluminium
650	NT 650 V Deauville	1998	2001	22	755	134	146	102	RC47	HB152	ALLUMINIO / aluminium
650	NT 650 V Deauville	1998	2001	22	755	134	146	102	RC47	HB152	ALLUMINIO / aluminium
650	SLR 650	1999	1999	22	755	134	146	102	RD09	HB152	ALLUMINIO / aluminium

ACCOSSATO

STREET RACING

INDICE ANALITICO MANUBRI / handlebars index

CC	MODELLO Model	ANNI / years DA From	A To	Ø	QUOTE / Dimensions A	B	C	D	TELAIO Chassis	CODICE Reference	MATERIALE Raw material
650	XL 650 V Transalp	2001	2003	22	755	134	146	102	RD10	HB152	ALLUMINIO / aluminium
650	XL 650 V Transalp	2000	2003	22	755	134	146	102	RD11	HB152	ALLUMINIO / aluminium
650	XRV 650 Africa Twin	1988	1990	22	755	134	146	102	RD03	HB152	ALLUMINIO / aluminium
650	CB 650 F	2014	2016	22	855	101	175	91	RC 75	HB174	ALLUMINIO / aluminium
650	NTV 650	1988	1995	22	855	101	175	91	RC 33	HB174	ALLUMINIO / aluminium
650	SLR 650	1999	1999	22	855	101	175	91	RD 09	HB174	ALLUMINIO / aluminium
650	FX 650 Vigor	1999	2002	22	820	87	145	75	RD09	HB167	ALLUMINIO / aluminium
650	NTV 650 Revere	1988	2001	22	820	87	145	75	RC33	HB167	ALLUMINIO / aluminium
650	NX 650 Dominator	1988	1989	22	820	87	145	75	RD08	HB167	ALLUMINIO / aluminium
650	NT 650 V Deauville	1998	2001	22	820	87	145	75	RC47	HB167	ALLUMINIO / aluminium
650	NT 650 V Deauville	1998	2001	22	820	87	145	75	RC47	HB167	ALLUMINIO / aluminium
650	SLR 650	1999	1999	22	820	87	145	75	RD09	HB167	ALLUMINIO / aluminium
650	XL 650 V Transalp	2001	2003	22	820	87	145	75	RD10	HB167	ALLUMINIO / aluminium
650	XL 650 V Transalp	2000	2003	22	820	87	145	75	RD11	HB167	ALLUMINIO / aluminium
650	XRV 650 Africa Twin	1988	1990	22	820	87	145	75	RD03	HB167	ALLUMINIO / aluminium
650	FX 650 Vigor	1999	2002	22	755	134	146	102	RD09	HB150	ACCIAIO / steel
650	NTV 650 Revere	1988	2001	22	755	134	146	102	RC33	HB150	ACCIAIO / steel
650	NX 650 Dominator	1988	1989	22	755	134	146	102	RD08	HB150	ACCIAIO / steel
650	NT 650 V Deauville	1998	2001	22	755	134	146	102	RC47	HB150	ACCIAIO / steel
650	NT 650 V Deauville	1998	2001	22	755	134	146	102	RC47	HB150	ACCIAIO / steel
650	SLR 650	1999	1999	22	755	134	146	102	RD09	HB150	ACCIAIO / steel
650	XL 650 V Transalp	2001	2003	22	755	134	146	102	RD10	HB150	ACCIAIO / steel
650	XL 650 V Transalp	2000	2003	22	755	134	146	102	RD11	HB150	ACCIAIO / steel
650	XRV 650 Africa Twin	1988	1990	22	755	134	146	102	RD03	HB150	ACCIAIO / steel
650	FX 650 Vigor	1999	2002	22	755	134	146	102	RD09	HB151	ACCIAIO / steel
650	NTV 650 Revere	1988	2001	22	755	134	146	102	RC33	HB151	ACCIAIO / steel
650	NX 650 Dominator	1988	1989	22	755	134	146	102	RD08	HB151	ACCIAIO / steel
650	NT 650 V Deauville	1998	2001	22	755	134	146	102	RC47	HB151	ACCIAIO / steel
650	NT 650 V Deauville	1998	2001	22	755	134	146	102	RC47	HB151	ACCIAIO / steel
650	SLR 650	1999	1999	22	755	134	146	102	RD09	HB151	ACCIAIO / steel
650	XL 650 V Transalp	2001	2003	22	755	134	146	102	RD10	HB151	ACCIAIO / steel
650	XL 650 V Transalp	2000	2003	22	755	134	146	102	RD11	HB151	ACCIAIO / steel
650	XRV 650 Africa Twin	1988	1990	22	755	134	146	102	RD03	HB151	ACCIAIO / steel
650	CB 650 F	2014	2016	22	750	132	130	113	RC 75	HB162	ACCIAIO / steel
650	NT 650 Deauville	1998	2005	22	750	132	130	113	RC 47	HB162	ACCIAIO / steel
650	NTV 650	1988	1995	22	750	132	130	113	RC 33	HB162	ACCIAIO / steel
650	NX 650 Dominator	1988	1989	22	750	132	130	113	RD 02	HB162	ACCIAIO / steel
650	NX 650 Dominator	1988	1989	22	750	132	130	113	RD 08	HB162	ACCIAIO / steel
650	SLR 650	1999	1999	22	750	132	130	113	RD 09	HB162	ACCIAIO / steel
650	XL 650 V Transalp	2001	2003	22	750	132	130	113	RD 10	HB162	ACCIAIO / steel
650	XL 650 V Transalp	2000	2003	22	750	132	130	113	RD 11	HB162	ACCIAIO / steel
650	CB 650 F	2014	2016	22	750	132	130	113	RC 75	HB163	ACCIAIO / steel
650	NT 650 Deauville	1998	2005	22	750	132	130	113	RC 47	HB163	ACCIAIO / steel
650	NTV 650	1988	1995	22	750	132	130	113	RC 33	HB163	ACCIAIO / steel
650	NX 650 Dominator	1988	1989	22	750	132	130	113	RD 02	HB163	ACCIAIO / steel
650	NX 650 Dominator	1988	1989	22	750	132	130	113	RD 08	HB163	ACCIAIO / steel
650	SLR 650	1999	1999	22	750	132	130	113	RD 09	HB163	ACCIAIO / steel
650	XL 650 V Transalp	2001	2003	22	750	132	130	113	RD 10	HB163	ACCIAIO / steel
650	XL 650 V Transalp	2000	2003	22	750	132	130	113	RD 11	HB163	ACCIAIO / steel
700	NT 700 V Deauville	2006	2016	22	750	132	130	113	RC 52	HB175	ALLUMINIO / aluminium
700	NT 700 V Deauville	2006	2015	22	750	132	130	113	RC 59	HB175	ALLUMINIO / aluminium
700	NT 700 V Deauville	2006	2016	22	750	132	130	113	RC 52	HB162	ACCIAIO / steel
700	NT 700 V Deauville	2006	2015	22	750	132	130	113	RC 59	HB162	ACCIAIO / steel
700	NT 700 V Deauville	2006	2016	22	750	132	130	113	RC 52	HB163	ACCIAIO / steel
700	NT 700 V Deauville	2006	2015	22	750	132	130	113	RC 59	HB163	ACCIAIO / steel
750	CB 750 seven fifty	2001	2001	22	750	132	130	113	RC 42	HB175	ALLUMINIO / aluminium
750	XRV 750 Africa Twin	1990	1992	22	750	132	130	113	RD 04	HB175	ALLUMINIO / aluminium
750	XRV 750 Africa Twin	1993	2003	22	750	132	130	113	RD 07	HB175	ALLUMINIO / aluminium
750	CB 750 Seven Fifty	2001	2001	22	755	134	146	102	RC42	HB152	ALLUMINIO / aluminium
750	XRV 750 Africa Twin	1990	1992	22	755	134	146	102	RD04	HB152	ALLUMINIO / aluminium
750	XRV 750 Africa Twin	1993	2003	22	755	134	146	102	RD07	HB152	ALLUMINIO / aluminium

STREET RACING

INDICE ANALITICO MANUBRI / handlebars index

CC	MODELLO Model	ANNI / years DA From	A To	Ø	QUOTE / Dimensions A	B	C	D	TELAIO Chassis	CODICE Reference	MATERIALE Raw material
750	CB 750 seven fifty	2001	2001	22	855	101	175	91	RC 42	HB174	ALLUMINIO / aluminium
750	CB 750 Seven Fifty	2001	2001	22	820	87	145	75	RC42	HB167	ALLUMINIO / aluminium
750	XRV 750 Africa Twin	1990	1992	22	820	87	145	75	RD04	HB167	ALLUMINIO / aluminium
750	XRV 750 Africa Twin	1993	2003	22	820	87	145	75	RD07	HB167	ALLUMINIO / aluminium
750	CB 750 Seven Fifty	2001	2001	22	755	134	146	102	RC42	HB150	ACCIAIO / steel
750	XRV 750 Africa Twin	1990	1992	22	755	134	146	102	RD04	HB150	ACCIAIO / steel
750	XRV 750 Africa Twin	1993	2003	22	755	134	146	102	RD07	HB150	ACCIAIO / steel
750	CB 750 Seven Fifty	2001	2001	22	755	134	146	102	RC42	HB151	ACCIAIO / steel
750	XRV 750 Africa Twin	1990	1992	22	755	134	146	102	RD04	HB151	ACCIAIO / steel
750	XRV 750 Africa Twin	1993	2003	22	755	134	146	102	RD07	HB151	ACCIAIO / steel
750	CB 750 seven fifty	2001	2001	22	750	132	130	113	RC 42	HB162	ACCIAIO / steel
750	XRV 750 Africa Twin	1990	1992	22	750	132	130	113	RD 04	HB162	ACCIAIO / steel
750	XRV 750 Africa Twin	1993	2003	22	750	132	130	113	RD 07	HB162	ACCIAIO / steel
750	CB 750 seven fifty	2001	2001	22	750	132	130	113	RC 42	HB163	ACCIAIO / steel
750	XRV 750 Africa Twin	1990	1992	22	750	132	130	113	RD 04	HB163	ACCIAIO / steel
750	XRV 750 Africa Twin	1993	2003	22	750	132	130	113	RD 07	HB163	ACCIAIO / steel
900	CB 900 Hornet	2002	2007	22	750	132	130	113	SC 48	HB175	ALLUMINIO / aluminium
900	CB 900 F Hornet	2002	2007	22	755	134	146	102	SC48	HB152	ALLUMINIO / aluminium
900	CB 900 Hornet	2002	2007	22	855	101	175	91	SC 48	HB174	ALLUMINIO / aluminium
900	HORNET 900	2002	2006	22	690	130	125	132		HB172	ALLUMINIO / aluminium
900	CB 900 F Hornet	2002	2007	22	820	87	145	75	SC48	HB167	ALLUMINIO / aluminium
900	CB 900 F Hornet	2002	2007	22	755	134	146	102	SC48	HB150	ACCIAIO / steel
900	CB 900 F Hornet	2002	2007	22	755	134	146	102	SC48	HB151	ACCIAIO / steel
900	CB 900 Hornet	2002	2007	22	750	132	130	113	SC 48	HB162	ACCIAIO / steel
900	CB 900 Hornet	2002	2007	22	750	132	130	113	SC 48	HB163	ACCIAIO / steel
1000	CB 1000 Big One	1993	1996	22	750	132	130	113	SC 30	HB175	ALLUMINIO / aluminium
1000	CB 1000 R	2011	2014	22	750	132	130	113	SC 60	HB175	ALLUMINIO / aluminium
1000	CBF 1000 F	2006	2016	22	750	132	130	113	SC 58	HB175	ALLUMINIO / aluminium
1000	CBF 1000 F	2006	2016	22	750	132	130	113	SC 64	HB175	ALLUMINIO / aluminium
1000	GL 1000	1980	1980	22	750	132	130	113	GL1	HB175	ALLUMINIO / aluminium
1000	XL 1000 Varadero	2001	2002	22	750	132	130	113	SD 01	HB175	ALLUMINIO / aluminium
1000	XL 1000 Varadero	2003	2011	22	750	132	130	113	SD 02	HB175	ALLUMINIO / aluminium
1000	CB 1000 F	1989	1992	22	755	134	146	102	SC30	HB152	ALLUMINIO / aluminium
1000	CB 1000 R	2011	2014	22	755	134	146	102	SC60	HB152	ALLUMINIO / aluminium
1000	CBF 1000	2010	2013	22	755	134	146	102	SC58	HB152	ALLUMINIO / aluminium
1000	XL 1000 V Varadero	1999	2002	22	755	134	146	102	SD01	HB152	ALLUMINIO / aluminium
1000	XL 1000 V Varadero	1999	2002	22	755	134	146	102	SD02	HB152	ALLUMINIO / aluminium
1000	CB 1000 Big One	1993	1996	22	855	101	175	91	SC 30	HB174	ALLUMINIO / aluminium
1000	CB 1000 R	2011	2014	22	855	101	175	91	SC 60	HB174	ALLUMINIO / aluminium
1000	GL 1000	1980	1980	22	855	101	175	91	GL1	HB174	ALLUMINIO / aluminium
1000	CB 1000 F	1989	1992	22	820	87	145	75	SC30	HB167	ALLUMINIO / aluminium
1000	CB 1000 R	2011	2014	22	820	87	145	75	SC60	HB167	ALLUMINIO / aluminium
1000	CBF 1000	2010	2013	22	820	87	145	75	SC58	HB167	ALLUMINIO / aluminium
1000	XL 1000 V Varadero	1999	2002	22	820	87	145	75	SD01	HB167	ALLUMINIO / aluminium
1000	XL 1000 V Varadero	1999	2002	22	820	87	145	75	SD02	HB167	ALLUMINIO / aluminium
1000	CB 1000 F	1989	1992	22	755	134	146	102	SC30	HB150	ACCIAIO / steel
1000	CB 1000 R	2011	2014	22	755	134	146	102	SC60	HB150	ACCIAIO / steel
1000	CBF 1000	2010	2013	22	755	134	146	102	SC58	HB150	ACCIAIO / steel
1000	XL 1000 V Varadero	1999	2002	22	755	134	146	102	SD01	HB150	ACCIAIO / steel
1000	XL 1000 V Varadero	1999	2002	22	755	134	146	102	SD02	HB150	ACCIAIO / steel
1000	CB 1000 F	1989	1992	22	755	134	146	102	SC30	HB151	ACCIAIO / steel
1000	CB 1000 R	2011	2014	22	755	134	146	102	SC60	HB151	ACCIAIO / steel
1000	CBF 1000	2010	2013	22	755	134	146	102	SC58	HB151	ACCIAIO / steel
1000	XL 1000 V Varadero	1999	2002	22	755	134	146	102	SD01	HB151	ACCIAIO / steel
1000	XL 1000 V Varadero	1999	2002	22	755	134	146	102	SD02	HB151	ACCIAIO / steel
1000	CB 1000 Big One	1993	1996	22	750	132	130	113	SC 30	HB162	ACCIAIO / steel
1000	CB 1000 R	2011	2014	22	750	132	130	113	SC 60	HB162	ACCIAIO / steel
1000	CBF 1000 F	2006	2016	22	750	132	130	113	SC 58	HB162	ACCIAIO / steel
1000	CBF 1000 F	2006	2016	22	750	132	130	113	SC 64	HB162	ACCIAIO / steel
1000	GL 1000	1980	1980	22	750	132	130	113	GL1	HB162	ACCIAIO / steel
1000	XL 1000 Varadero	2001	2002	22	750	132	130	113	SD 01	HB162	ACCIAIO / steel

ACCOSSATO

STREET RACING

INDICE ANALITICO MANUBRI / handlebars index

CC	MODELLO Model	ANNI / years DA From	A To	Ø	QUOTE / Dimensions A	B	C	D	TELAIO Chassis	CODICE Reference	MATERIALE Raw material
1000	XL 1000 Varadero	2003	2011	22	750	132	130	113	SD 02	HB162	ACCIAIO / steel
1000	CB 1000 Big One	1993	1996	22	750	132	130	113	SC 30	HB163	ACCIAIO / steel
1000	CB 1000 R	2011	2014	22	750	132	130	113	SC 60	HB163	ACCIAIO / steel
1000	CBF 1000 F	2006	2016	22	750	132	130	113	SC 58	HB163	ACCIAIO / steel
1000	CBF 1000 F	2006	2016	22	750	132	130	113	SC 64	HB163	ACCIAIO / steel
1000	GL 1000	1980	1980	22	750	132	130	113	GL1	HB163	ACCIAIO / steel
1000	XL 1000 Varadero	2001	2002	22	750	132	130	113	SD 01	HB163	ACCIAIO / steel
1000	XL 1000 Varadero	2003	2011	22	750	132	130	113	SD 02	HB163	ACCIAIO / steel
1100	CB 1100 X-11	2001	2001	22	750	132	130	113	SC 42	HB175	ALLUMINIO / aluminium
1100	X-Eleven	1999	2001	22	755	134	146	102	SC42	HB152	ALLUMINIO / aluminium
1100	CB 1100 X-11	2001	2001	22	855	101	175	91	SC 42	HB174	ALLUMINIO / aluminium
1100	X-Eleven	1999	2001	22	820	87	145	75	SC42	HB167	ALLUMINIO / aluminium
1100	X-Eleven	1999	2001	22	755	134	146	102	SC42	HB150	ACCIAIO / steel
1100	X-Eleven	1999	2001	22	755	134	146	102	SC42	HB151	ACCIAIO / steel
1100	CB 1100 X-11	2001	2001	22	750	132	130	113	SC 42	HB162	ACCIAIO / steel
1100	CB 1100 X-11	2001	2001	22	750	132	130	113	SC 42	HB163	ACCIAIO / steel
1300	CB 1300	2003	2009	22	750	132	130	113	SC 40-SC54	HB175	ALLUMINIO / aluminium
1300	CB 1300 X-4	1997	2003	22	750	132	130	113	SC 38	HB175	ALLUMINIO / aluminium
1300	CB 1300 / S	2010	2012	22	755	134	146	102	SC54	HB152	ALLUMINIO / aluminium
1300	CB 1300	2003	2009	22	855	101	175	91	SC 40	HB174	ALLUMINIO / aluminium
1300	CB 1300	2003	2009	22	855	101	175	91	SC 54	HB174	ALLUMINIO / aluminium
1300	CB 1300 X-4	1997	2003	22	855	101	175	91	SC 38	HB174	ALLUMINIO / aluminium
1300	CB 1300 / S	2010	2012	22	820	87	145	75	SC54	HB167	ALLUMINIO / aluminium
1300	CB 1300 / S	2010	2012	22	755	134	146	102	SC54	HB150	ACCIAIO / steel
1300	CB 1300 / S	2010	2012	22	755	134	146	102	SC54	HB151	ACCIAIO / steel
1300	CB 1300	2003	2009	22	750	132	130	113	SC 40	HB162	ACCIAIO / steel
1300	CB 1300	2003	2009	22	750	132	130	113	SC 54	HB162	ACCIAIO / steel
1300	CB 1300 X-4	1997	2003	22	750	132	130	113	SC 38	HB162	ACCIAIO / steel
1300	CB 1300	2003	2009	22	750	132	130	113	SC 40	HB163	ACCIAIO / steel
1300	CB 1300	2003	2009	22	750	132	130	113	SC 54	HB163	ACCIAIO / steel
1300	CB 1300 X-4	1997	2003	22	750	132	130	113	SC 38	HB163	ACCIAIO / steel

HYOSUNG

125	125 Karion	2007	2011	22	750	132	130	113	RTT	HB175	ALLUMINIO / aluminium
125	GT 125 naked	2015	2017	22	750	132	130	113	GT	HB175	ALLUMINIO / aluminium
125	GT 125 naked	2015	2017	22	855	101	175	91	GT	HB174	ALLUMINIO / aluminium
125	125 Karion	2007	2011	22	750	132	130	113	RTT	HB162	ACCIAIO / steel
125	GT 125 naked	2015	2017	22	750	132	130	113	GT	HB162	ACCIAIO / steel
125	125 Karion	2007	2011	22	750	132	130	113	RTT	HB163	ACCIAIO / steel
125	GT 125 naked	2015	2017	22	750	132	130	113	GT	HB163	ACCIAIO / steel
250	GT 250 naked	2001	2016	22	750	132	130	113	GT	HB175	ALLUMINIO / aluminium
250	GT 250 naked	2001	2016	22	855	101	175	91	GT	HB174	ALLUMINIO / aluminium
250	GT 250 naked	2001	2016	22	750	132	130	113	GT	HB162	ACCIAIO / steel
250	GT 250 naked	2001	2016	22	750	132	130	113	GT	HB163	ACCIAIO / steel
650	GT 650 naked	2005	2016	22	750	132	130	113	GT 650	HB175	ALLUMINIO / aluminium
650	GT 650 Naked	2005	2016	22	755	134	146	102	GT650	HB152	ALLUMINIO / aluminium
650	GT 650 naked	2005	2016	22	855	101	175	91	GT 650	HB174	ALLUMINIO / aluminium
650	GT 650 Naked	2005	2016	22	820	87	145	75	GT650	HB167	ALLUMINIO / aluminium
650	GT 650 Naked	2005	2016	22	755	134	146	102	GT650	HB150	ACCIAIO / steel
650	GT 650 Naked	2005	2016	22	755	134	146	102	GT650	HB151	ACCIAIO / steel
650	GT 650 naked	2005	2016	22	750	132	130	113	GT 650	HB162	ACCIAIO / steel
650	GT 650 naked	2005	2016	22	750	132	130	113	GT 650	HB163	ACCIAIO / steel

KAWASAKI

50	KFX 50	2003	2006	22	750	132	130	113	KFX 50	HB175	ALLUMINIO / aluminium
50	KFX 50	2003	2006	22	750	132	130	113	KFX 50	HB162	ACCIAIO / steel
50	KFX 50	2003	2006	22	750	132	130	113	KFX 50	HB163	ACCIAIO / steel
250	KFX 250	2004	2016	22	750	132	130	113	KFX 250	HB175	ALLUMINIO / aluminium
250	KFX 250	2004	2016	22	750	132	130	113	KFX 250	HB162	ACCIAIO / steel
250	KFX 250	2004	2016	22	750	132	130	113	KFX 250	HB163	ACCIAIO / steel
300	KLF 300 Bayou, C	1997	2001	22	750	132	130	113	LF 300 B	HB175	ALLUMINIO / aluminium

STREET RACING

INDICE ANALITICO MANUBRI / handlebars index

CC	MODELLO Model	ANNI / years DA From	A To	Ø	QUOTE / Dimensions A	B	C	D	TELAIO Chassis	CODICE Reference	MATERIALE Raw material
300	KLF 300 Bayou, C	1997	2001	22	750	132	130	113	LF 300 B	HB162	ACCIAIO / steel
300	KLF 300 Bayou, C	1997	2001	22	750	132	130	113	LF 300 B	HB163	ACCIAIO / steel
400	KLF 400 Bayou	1996	1999	22	750	132	130	113	LF 400 B	HB175	ALLUMINIO / aluminium
400	KLF 400 Bayou	1996	1999	22	750	132	130	113	LF 400 B	HB162	ACCIAIO / steel
400	KLF 400 Bayou	1996	1999	22	750	132	130	113	LF 400 B	HB163	ACCIAIO / steel
500	ER-5, Twister	1997	2000	22	750	132	130	113	ER 500 A	HB175	ALLUMINIO / aluminium
500	ER-5, Twister	2001	2005	22	750	132	130	113	ER500A(C)	HB175	ALLUMINIO / aluminium
500	ER-5	1997	2005	22	755	134	146	102	ER500A	HB152	ALLUMINIO / aluminium
500	ER-5	1997	2005	22	755	134	146	102	ER500A	HB152	ALLUMINIO / aluminium
500	ER-5, Twister	1997	2000	22	855	101	175	91	ER 500 A	HB174	ALLUMINIO / aluminium
500	ER-5, Twister	2001	2005	22	855	101	175	91	ER500A(C)	HB174	ALLUMINIO / aluminium
500	ER-5	1997	2005	22	820	87	145	75	ER500A	HB167	ALLUMINIO / aluminium
500	ER-5	1997	2005	22	820	87	145	75	ER500A	HB167	ALLUMINIO / aluminium
500	ER-5	1997	2005	22	755	134	146	102	ER500A	HB150	ACCIAIO / steel
500	ER-5	1997	2005	22	755	134	146	102	ER500A	HB150	ACCIAIO / steel
500	ER-5	1997	2005	22	755	134	146	102	ER500A	HB151	ACCIAIO / steel
500	ER-5	1997	2005	22	755	134	146	102	ER500A	HB151	ACCIAIO / steel
500	ER-5, Twister	1997	2000	22	750	132	130	113	ER 500 A	HB162	ACCIAIO / steel
500	ER-5, Twister	2001	2005	22	750	132	130	113	ER500A(C)	HB162	ACCIAIO / steel
500	ER-5, Twister	1997	2000	22	750	132	130	113	ER 500 A	HB163	ACCIAIO / steel
500	ER-5, Twister	2001	2005	22	750	132	130	113	ER500A(C)	HB163	ACCIAIO / steel
550	ZR 550 Zephyr	1991	1995	22	750	132	130	113	ZR550B	HB175	ALLUMINIO / aluminium
550	Zephyr 550	1990	1994	22	755	134	146	102	ZR550B	HB152	ALLUMINIO / aluminium
550	ZR 550 Zephyr	1991	1995	22	855	101	175	91	ZR550B	HB174	ALLUMINIO / aluminium
550	Zephyr 550	1990	1994	22	820	87	145	75	ZR550B	HB167	ALLUMINIO / aluminium
550	Zephyr 550	1990	1994	22	755	134	146	102	ZR550B	HB150	ACCIAIO / steel
550	Zephyr 550	1990	1994	22	755	134	146	102	ZR550B	HB151	ACCIAIO / steel
550	ZR 550 Zephyr	1991	1995	22	750	132	130	113	ZR550B	HB162	ACCIAIO / steel
550	ZR 550 Zephyr	1991	1995	22	750	132	130	113	ZR550B	HB163	ACCIAIO / steel
600	ZL 600 Eliminator	1995	1997	22	750	132	130	113	ZL600B	HB175	ALLUMINIO / aluminium
600	ZL 600 Eliminator	1995	1997	22	755	134	146	102	ZL600B	HB152	ALLUMINIO / aluminium
600	ZL 600 Eliminator	1995	1997	22	855	101	175	91	ZL600B	HB174	ALLUMINIO / aluminium
600	ZL 600 Eliminator	1995	1997	22	820	87	145	75	ZL600B	HB167	ALLUMINIO / aluminium
600	ZL 600 Eliminator	1995	1997	22	755	134	146	102	ZL600B	HB150	ACCIAIO / steel
600	ZL 600 Eliminator	1995	1997	22	755	134	146	102	ZL600B	HB151	ACCIAIO / steel
600	ZL 600 Eliminator	1995	1997	22	750	132	130	113	ZL600B	HB162	ACCIAIO / steel
600	ZL 600 Eliminator	1995	1997	22	750	132	130	113	ZL600B	HB163	ACCIAIO / steel
650	ER-6f	2006	2008	22	750	132	130	113	EX650A	HB175	ALLUMINIO / aluminium
650	ER-6f	2009	2011	22	750	132	130	113	EX650C	HB175	ALLUMINIO / aluminium
650	ER-6f	2012	2016	22	750	132	130	113	EX650E	HB175	ALLUMINIO / aluminium
650	ER-6n	2006	2008	22	750	132	130	113	ER650A	HB175	ALLUMINIO / aluminium
650	ER-6n	2009	2011	22	750	132	130	113	ER650C	HB175	ALLUMINIO / aluminium
650	ER-6n	2012	2016	22	750	132	130	113	ER650E	HB175	ALLUMINIO / aluminium
650	Versys 650	2007	2009	22	750	132	130	113	LE650A	HB175	ALLUMINIO / aluminium
650	Versys 650	2010	2010	22	750	132	130	113	LE650C	HB175	ALLUMINIO / aluminium
650	W 650	1999	2005	22	750	132	130	113	EJ650A	HB175	ALLUMINIO / aluminium
650	Z 650	2017	2017	22	750	132	130	113	KZ 650 B	HB175	ALLUMINIO / aluminium
650	Z 650	2017	2017	22	750	132	130	113	KZ 650 D	HB175	ALLUMINIO / aluminium
650	W 650	1999	2005	22	755	134	146	102	EJ650A	HB152	ALLUMINIO / aluminium
650	ER-6n	2006	2008	22	755	134	146	102	ER650A	HB152	ALLUMINIO / aluminium
650	ER-6f	2006	2008	22	755	134	146	102	EX650A	HB152	ALLUMINIO / aluminium
650	ER-6n	2009	2011	22	755	134	146	102	ER650C	HB152	ALLUMINIO / aluminium
650	ER-6f	2009	2011	22	755	134	146	102	EX650C	HB152	ALLUMINIO / aluminium
650	Versys	2007	2009	22	755	134	146	102	LE650A	HB152	ALLUMINIO / aluminium
650	ER-6f	2006	2008	22	855	101	175	91	EX650A	HB174	ALLUMINIO / aluminium
650	ER-6f	2009	2011	22	855	101	175	91	EX650C	HB174	ALLUMINIO / aluminium
650	ER-6f	2012	2016	22	855	101	175	91	EX650E	HB174	ALLUMINIO / aluminium
650	ER-6n	2006	2008	22	855	101	175	91	ER650A	HB174	ALLUMINIO / aluminium
650	ER-6n	2009	2011	22	855	101	175	91	ER650C	HB174	ALLUMINIO / aluminium
650	ER-6n	2012	2016	22	855	101	175	91	ER650E	HB174	ALLUMINIO / aluminium
650	W 650	1999	2000	22	855	101	175	91	EJ650A	HB174	ALLUMINIO / aluminium

ACCOSSATO

STREET RACING

INDICE ANALITICO MANUBRI / handlebars index

CC	MODELLO Model	ANNI / years DA From	A To	Ø	QUOTE / Dimensions A	B	C	D	TELAIO Chassis	CODICE Reference	MATERIALE Raw material
650	Z 650	2017	2017	22	855	101	175	91	KZ 650 B	HB174	ALLUMINIO / aluminium
650	Z 650	2017	2017	22	855	101	175	91	KZ 650 D	HB174	ALLUMINIO / aluminium
650	ER6N	2006	2016	22	690	130	125	132		HB172	ALLUMINIO / aluminium
650	W 650	1999	2005	22	820	87	145	75	EJ650A	HB167	ALLUMINIO / aluminium
650	ER-6n	2006	2008	22	820	87	145	75	ER650A	HB167	ALLUMINIO / aluminium
650	ER-6f	2006	2008	22	820	87	145	75	EX650A	HB167	ALLUMINIO / aluminium
650	ER-6n	2009	2011	22	820	87	145	75	ER650C	HB167	ALLUMINIO / aluminium
650	ER-6f	2009	2011	22	820	87	145	75	EX650C	HB167	ALLUMINIO / aluminium
650	Versys	2007	2009	22	820	87	145	75	LE650A	HB167	ALLUMINIO / aluminium
650	W 650	1999	2005	22	755	134	146	102	EJ650A	HB150	ACCIAIO / steel
650	ER-6n	2006	2008	22	755	134	146	102	ER650A	HB150	ACCIAIO / steel
650	ER-6f	2006	2008	22	755	134	146	102	EX650A	HB150	ACCIAIO / steel
650	ER-6n	2009	2011	22	755	134	146	102	ER650C	HB150	ACCIAIO / steel
650	ER-6f	2009	2011	22	755	134	146	102	EX650C	HB150	ACCIAIO / steel
650	Versys	2007	2009	22	755	134	146	102	LE650A	HB150	ACCIAIO / steel
650	W 650	1999	2005	22	755	134	146	102	EJ650A	HB151	ACCIAIO / steel
650	ER-6n	2006	2008	22	755	134	146	102	ER650A	HB151	ACCIAIO / steel
650	ER-6f	2006	2008	22	755	134	146	102	EX650A	HB151	ACCIAIO / steel
650	ER-6n	2009	2011	22	755	134	146	102	ER650C	HB151	ACCIAIO / steel
650	ER-6f	2009	2011	22	755	134	146	102	EX650C	HB151	ACCIAIO / steel
650	Versys	2007	2009	22	755	134	146	102	LE650A	HB151	ACCIAIO / steel
650	ER-6f	2006	2008	22	750	132	130	113	EX650A	HB162	ACCIAIO / steel
650	ER-6f	2009	2011	22	750	132	130	113	EX650C	HB162	ACCIAIO / steel
650	ER-6f	2012	2016	22	750	132	130	113	EX650E	HB162	ACCIAIO / steel
650	ER-6n	2006	2008	22	750	132	130	113	ER650A	HB162	ACCIAIO / steel
650	ER-6n	2009	2011	22	750	132	130	113	ER650C	HB162	ACCIAIO / steel
650	ER-6n	2012	2016	22	750	132	130	113	ER650E	HB162	ACCIAIO / steel
650	Versys 650	2007	2009	22	750	132	130	113	LE650A	HB162	ACCIAIO / steel
650	Versys 650	2010	2010	22	750	132	130	113	LE650C	HB162	ACCIAIO / steel
650	W 650	1999	2005	22	750	132	130	113	EJ650A	HB162	ACCIAIO / steel
650	Z 650	2017	2017	22	750	132	130	113	KZ 650 B	HB162	ACCIAIO / steel
650	Z 650	2017	2017	22	750	132	130	113	KZ 650 D	HB162	ACCIAIO / steel
650	ER-6f	2006	2008	22	750	132	130	113	EX650A	HB163	ACCIAIO / steel
650	ER-6f	2009	2011	22	750	132	130	113	EX650C	HB163	ACCIAIO / steel
650	ER-6f	2012	2016	22	750	132	130	113	EX650E	HB163	ACCIAIO / steel
650	ER-6n	2006	2008	22	750	132	130	113	ER650A	HB163	ACCIAIO / steel
650	ER-6n	2009	2011	22	750	132	130	113	ER650C	HB163	ACCIAIO / steel
650	ER-6n	2012	2016	22	750	132	130	113	ER650E	HB163	ACCIAIO / steel
650	Versys 650	2007	2009	22	750	132	130	113	LE650A	HB163	ACCIAIO / steel
650	Versys 650	2010	2010	22	750	132	130	113	LE650C	HB163	ACCIAIO / steel
650	W 650	1999	2005	22	750	132	130	113	EJ650A	HB163	ACCIAIO / steel
650	Z 650	2017	2017	22	750	132	130	113	KZ 650 B	HB163	ACCIAIO / steel
650	Z 650	2017	2017	22	750	132	130	113	KZ 650 D	HB163	ACCIAIO / steel
700	KFX 700	2006	2011	22	750	132	130	113	K7SV60	HB175	ALLUMINIO / aluminium
700	KSV 700 V-Force	2004	2008	22	750	132	130	113	KSV 700	HB175	ALLUMINIO / aluminium
700	KVF 700 Prairie	2004	2004	22	750	132	130	113	KVF 700	HB175	ALLUMINIO / aluminium
700	KFX 700	2006	2011	22	750	132	130	113	K7SV60	HB162	ACCIAIO / steel
700	KSV 700 V-Force	2004	2008	22	750	132	130	113	KSV 700	HB162	ACCIAIO / steel
700	KVF 700 Prairie	2004	2004	22	750	132	130	113	KVF 700	HB162	ACCIAIO / steel
700	KFX 700	2006	2011	22	750	132	130	113	K7SV60	HB163	ACCIAIO / steel
700	KSV 700 V-Force	2004	2008	22	750	132	130	113	KSV 700	HB163	ACCIAIO / steel
700	KVF 700 Prairie	2004	2004	22	750	132	130	113	KVF 700	HB163	ACCIAIO / steel
750	Z 750	2004	2006	22	750	132	130	113	ZR750J	HB175	ALLUMINIO / aluminium
750	Z 750 S	2004	2006	22	750	132	130	113	ZR750J	HB175	ALLUMINIO / aluminium
750	Z 750	2011	2012	22	750	132	130	113	ZR750L (L,M)	HB175	ALLUMINIO / aluminium
750	Z 750	2011	2012	22	750	132	130	113	ZR750N (N,P)	HB175	ALLUMINIO / aluminium
750	Z 750 R	2011	2012	22	750	132	130	113	ZR750N	HB175	ALLUMINIO / aluminium
750	ZR 750 Zephyr	1991	1996	22	750	132	130	113	ZR 750C	HB175	ALLUMINIO / aluminium
750	ZR-7	1999	2003	22	750	132	130	113	ZR750F	HB175	ALLUMINIO / aluminium
750	ZR-7 S	2001	2003	22	750	132	130	113	ZR750F	HB175	ALLUMINIO / aluminium
750	Z 750 / S	2004	2006	22	755	134	146	102	ZR750J	HB152	ALLUMINIO / aluminium

STREET RACING

INDICE ANALITICO MANUBRI / handlebars index

CC	MODELLO Model	ANNI / years DA From	A To	Ø	QUOTE / Dimensions A	B	C	D	TELAIO Chassis	CODICE Reference	MATERIALE Raw material
750	Z 750	2007	2012	22	755	134	146	102	ZR750L	HB152	ALLUMINIO / aluminium
750	ZR-7 / S	1999	2003	22	755	134	146	102	ZR750F	HB152	ALLUMINIO / aluminium
750	Zephyr 750	1991	1994	22	755	134	146	102	ZR750C	HB152	ALLUMINIO / aluminium
750	Z 750	2004	2006	22	855	101	175	91	ZR750J	HB174	ALLUMINIO / aluminium
750	Z 750 S	2004	2006	22	855	101	175	91	ZR750J	HB174	ALLUMINIO / aluminium
750	Z 750	2011	2012	22	855	101	175	91	ZR750L (L,M)	HB174	ALLUMINIO / aluminium
750	Z 750	2011	2012	22	855	101	175	91	ZR750N (N,P)	HB174	ALLUMINIO / aluminium
750	Z 750 R	2011	2012	22	855	101	175	91	ZR750N	HB174	ALLUMINIO / aluminium
750	ZR 750 Zephyr	1991	1996	22	855	101	175	91	ZR 750C	HB174	ALLUMINIO / aluminium
750	ZR-7	1999	2003	22	855	101	175	91	ZR750F	HB174	ALLUMINIO / aluminium
750	ZR-7 S	2001	2003	22	855	101	175	91	ZR750F	HB174	ALLUMINIO / aluminium
750	Z750	2005	2012	22	750	100	115	112		HB171	ALLUMINIO / aluminium
750	Z 750 / S	2004	2006	22	820	87	145	75	ZR750J	HB167	ALLUMINIO / aluminium
750	Z 750	2007	2012	22	820	87	145	75	ZR750L	HB167	ALLUMINIO / aluminium
750	ZR-7 / S	1999	2003	22	820	87	145	75	ZR750F	HB167	ALLUMINIO / aluminium
750	Zephyr 750	1991	1994	22	820	87	145	75	ZR750C	HB167	ALLUMINIO / aluminium
750	Z 750 / S	2004	2006	22	755	134	146	102	ZR750J	HB150	ACCIAIO / steel
750	Z 750	2007	2012	22	755	134	146	102	ZR750L	HB150	ACCIAIO / steel
750	ZR-7 / S	1999	2003	22	755	134	146	102	ZR750F	HB150	ACCIAIO / steel
750	Zephyr 750	1991	1994	22	755	134	146	102	ZR750C	HB150	ACCIAIO / steel
750	Z 750 / S	2004	2006	22	755	134	146	102	ZR750J	HB151	ACCIAIO / steel
750	Z 750	2007	2012	22	755	134	146	102	ZR750L	HB151	ACCIAIO / steel
750	ZR-7 / S	1999	2003	22	755	134	146	102	ZR750F	HB151	ACCIAIO / steel
750	Zephyr 750	1991	1994	22	755	134	146	102	ZR750C	HB151	ACCIAIO / steel
750	Z 750	2004	2006	22	750	132	130	113	ZR750J	HB162	ACCIAIO / steel
750	Z 750 S	2004	2006	22	750	132	130	113	ZR750J	HB162	ACCIAIO / steel
750	Z 750	2011	2012	22	750	132	130	113	ZR750L (L,M)	HB162	ACCIAIO / steel
750	Z 750	2011	2012	22	750	132	130	113	ZR750N (N,P)	HB162	ACCIAIO / steel
750	Z 750 R	2011	2012	22	750	132	130	113	ZR750N	HB162	ACCIAIO / steel
750	ZR 750 Zephyr	1991	1996	22	750	132	130	113	ZR 750C	HB162	ACCIAIO / steel
750	ZR-7	1999	2003	22	750	132	130	113	ZR750F	HB162	ACCIAIO / steel
750	ZR-7 S	2001	2003	22	750	132	130	113	ZR750F	HB162	ACCIAIO / steel
750	Z 750	2004	2006	22	750	132	130	113	ZR750J	HB163	ACCIAIO / steel
750	Z 750 S	2004	2006	22	750	132	130	113	ZR750J	HB163	ACCIAIO / steel
750	Z 750	2011	2012	22	750	132	130	113	ZR750L (L,M)	HB163	ACCIAIO / steel
750	Z 750	2011	2012	22	750	132	130	113	ZR750N (N,P)	HB163	ACCIAIO / steel
750	Z 750 R	2011	2012	22	750	132	130	113	ZR750N	HB163	ACCIAIO / steel
750	ZR 750 Zephyr	1991	1996	22	750	132	130	113	ZR 750C	HB163	ACCIAIO / steel
750	ZR-7	1999	2003	22	750	132	130	113	ZR750F	HB163	ACCIAIO / steel
750	ZR-7 S	2001	2003	22	750	132	130	113	ZR750F	HB163	ACCIAIO / steel
800	Z 800	2013	2016	22	750	132	130	113	ZR 800 A (A, B)	HB175	ALLUMINIO / aluminium
800	Z 800 e	2013	2016	22	750	132	130	113	ZR 800 C (C.,D.)	HB175	ALLUMINIO / aluminium
800	Z 800	2013	2016	22	855	101	175	91	ZR 800 A (A, B)	HB174	ALLUMINIO / aluminium
800	Z 800 e	2013	2016	22	855	101	175	91	ZR 800 C (C.,D.)	HB174	ALLUMINIO / aluminium
800	Z 800	2013	2016	22	750	132	130	113	ZR 800 A (A, B)	HB162	ACCIAIO / steel
800	Z 800 e	2013	2016	22	750	132	130	113	ZR 800 C (C.,D.)	HB162	ACCIAIO / steel
800	Z 800	2013	2016	22	750	132	130	113	ZR 800 A (A, B)	HB163	ACCIAIO / steel
800	Z 800 e	2013	2016	22	750	132	130	113	ZR 800 C (C.,D.)	HB163	ACCIAIO / steel
1000	KLV 1000	2004	2005	22	750	132	130	113	WVBS	HB175	ALLUMINIO / aluminium
1000	Z 1000	2003	2006	22	750	132	130	113	ZRT00A	HB175	ALLUMINIO / aluminium
1000	Z 1000, ABS	2007	2009	22	750	132	130	113	ZRT00B	HB175	ALLUMINIO / aluminium
1000	KLV 1000	2004	2005	22	755	134	146	102	WVBS	HB152	ALLUMINIO / aluminium
1000	Z 1000	2003	2006	22	755	134	146	102	ZRT00A	HB152	ALLUMINIO / aluminium
1000	Z 1000	2007	2009	22	755	134	146	102	ZRT00B	HB152	ALLUMINIO / aluminium
1000	KLV 1000	2004	2005	22	855	101	175	91	WVBS	HB174	ALLUMINIO / aluminium
1000	Z 1000	2003	2006	22	855	101	175	91	ZRT00A	HB174	ALLUMINIO / aluminium
1000	Z 1000, ABS	2007	2009	22	855	101	175	91	ZRT00B	HB174	ALLUMINIO / aluminium
1000	KLV 1000	2004	2005	22	820	87	145	75	WVBS	HB167	ALLUMINIO / aluminium
1000	Z 1000	2003	2006	22	820	87	145	75	ZRT00A	HB167	ALLUMINIO / aluminium
1000	Z 1000	2007	2009	22	820	87	145	75	ZRT00B	HB167	ALLUMINIO / aluminium
1000	KLV 1000	2004	2005	22	755	134	146	102	WVBS	HB150	ACCIAIO / steel

ACCOSSATO

STREET RACING

INDICE ANALITICO MANUBRI / handlebars index

CC	MODELLO Model	ANNI / years DA From	A To	Ø	QUOTE / Dimensions A	B	C	D	TELAIO Chassis	CODICE Reference	MATERIALE Raw material
1000	Z 1000	2003	2006	22	755	134	146	102	ZRT00A	HB150	ACCIAIO / steel
1000	Z 1000	2007	2009	22	755	134	146	102	ZRT00B	HB150	ACCIAIO / steel
1000	KLV 1000	2004	2005	22	755	134	146	102	WVBS	HB151	ACCIAIO / steel
1000	Z 1000	2003	2006	22	755	134	146	102	ZRT00A	HB151	ACCIAIO / steel
1000	Z 1000	2007	2009	22	755	134	146	102	ZRT00B	HB151	ACCIAIO / steel
1000	KLV 1000	2004	2005	22	750	132	130	113	WVBS	HB162	ACCIAIO / steel
1000	Z 1000	2003	2006	22	750	132	130	113	ZRT00A	HB162	ACCIAIO / steel
1000	Z 1000, ABS	2007	2009	22	750	132	130	113	ZRT00B	HB162	ACCIAIO / steel
1000	KLV 1000	2004	2005	22	750	132	130	113	WVBS	HB163	ACCIAIO / steel
1000	Z 1000	2003	2006	22	750	132	130	113	ZRT00A	HB163	ACCIAIO / steel
1000	Z 1000, ABS	2007	2009	22	750	132	130	113	ZRT00B	HB163	ACCIAIO / steel
1100	ZR 1100 Zephyr	1992	1995	22	750	132	130	113	ZRT10A	HB175	ALLUMINIO / aluminium
1100	ZRX 1100 R, S	1993	1999	22	750	132	130	113	ZRT10C	HB175	ALLUMINIO / aluminium
1100	Zephyr 1100	1992	1995	22	755	134	146	102	ZRT10A	HB152	ALLUMINIO / aluminium
1100	ZRX 1100	1997	1999	22	755	134	146	102	ZRT10C	HB152	ALLUMINIO / aluminium
1100	ZRX 1100	1997	1999	22	755	134	146	102	ZRT10C	HB152	ALLUMINIO / aluminium
1100	ZR 1100 Zephyr	1992	1995	22	855	101	175	91	ZRT10A	HB174	ALLUMINIO / aluminium
1100	ZRX 1100 R, S	1993	1999	22	855	101	175	91	ZRT10C	HB174	ALLUMINIO / aluminium
1100	Zephyr 1100	1992	1995	22	820	87	145	75	ZRT10A	HB167	ALLUMINIO / aluminium
1100	ZRX 1100	1997	1999	22	820	87	145	75	ZRT10C	HB167	ALLUMINIO / aluminium
1100	ZRX 1100	1997	1999	22	820	87	145	75	ZRT10C	HB167	ALLUMINIO / aluminium
1100	Zephyr 1100	1992	1995	22	755	134	146	102	ZRT10A	HB150	ACCIAIO / steel
1100	ZRX 1100	1997	1999	22	755	134	146	102	ZRT10C	HB150	ACCIAIO / steel
1100	ZRX 1100	1997	1999	22	755	134	146	102	ZRT10C	HB150	ACCIAIO / steel
1100	Zephyr 1100	1992	1995	22	755	134	146	102	ZRT10A	HB151	ACCIAIO / steel
1100	ZRX 1100	1997	1999	22	755	134	146	102	ZRT10C	HB151	ACCIAIO / steel
1100	ZRX 1100	1997	1999	22	755	134	146	102	ZRT10C	HB151	ACCIAIO / steel
1100	ZR 1100 Zephyr	1992	1995	22	750	132	130	113	ZRT10A	HB162	ACCIAIO / steel
1100	ZRX 1100 R, S	1993	1999	22	750	132	130	113	ZRT10C	HB162	ACCIAIO / steel
1100	ZR 1100 Zephyr	1992	1995	22	750	132	130	113	ZRT10A	HB163	ACCIAIO / steel
1100	ZRX 1100 R, S	1993	1999	22	750	132	130	113	ZRT10C	HB163	ACCIAIO / steel
1200	ZRX 1200 R, S	2001	2003	22	750	132	130	113	ZRT20A	HB175	ALLUMINIO / aluminium
1200	ZRX 1200 / R / S	2001	2004	22	755	134	146	102	ZRT20A	HB152	ALLUMINIO / aluminium
1200	ZRX 1200 R, S	2001	2005	22	855	101	175	91	ZRT20A	HB174	ALLUMINIO / aluminium
1200	ZRX 1200 / R / S	2001	2004	22	820	87	145	75	ZRT20A	HB167	ALLUMINIO / aluminium
1200	ZRX 1200 / R / S	2001	2004	22	755	134	146	102	ZRT20A	HB150	ACCIAIO / steel
1200	ZRX 1200 / R / S	2001	2004	22	755	134	146	102	ZRT20A	HB151	ACCIAIO / steel
1200	ZRX 1200 R, S	2001	2003	22	750	132	130	113	ZRT20A	HB162	ACCIAIO / steel
1200	ZRX 1200 R, S	2001	2003	22	750	132	130	113	ZRT20A	HB163	ACCIAIO / steel
1300	Z 1300	1980	1985	22	755	134	146	102	KZT30AG	HB152	ALLUMINIO / aluminium
1300	Z 1300 DFI	1984	1989	22	755	134	146	102	KZT00A	HB152	ALLUMINIO / aluminium
1300	Z 1300	1980	1985	22	820	87	145	75	KZT30AG	HB167	ALLUMINIO / aluminium
1300	Z 1300 DFI	1984	1989	22	820	87	145	75	KZT00A	HB167	ALLUMINIO / aluminium
1300	Z 1300	1980	1985	22	755	134	146	102	KZT30AG	HB150	ACCIAIO / steel
1300	Z 1300 DFI	1984	1989	22	755	134	146	102	KZT00A	HB150	ACCIAIO / steel
1300	Z 1300	1980	1985	22	755	134	146	102	KZT30AG	HB151	ACCIAIO / steel
1300	Z 1300 DFI	1984	1989	22	755	134	146	102	KZT00A	HB151	ACCIAIO / steel
KTM											
620	620 DUKE	1994	1997	22	750	132	130	113	---	HB175	ALLUMINIO / aluminium
620	620 DUKE	1994	1997	22	855	101	175	91	---	HB174	ALLUMINIO / aluminium
620	620 DUKE	1994	1997	22	750	132	130	113	---	HB162	ACCIAIO / steel
620	620 DUKE	1994	1997	22	750	132	130	113	---	HB163	ACCIAIO / steel
640	640 DUKE II	1996	2006	22	750	132	130	113	KTM DK II	HB175	ALLUMINIO / aluminium
640	640 DUKE II	1996	2006	22	855	101	175	91	KTM DK II	HB174	ALLUMINIO / aluminium
640	640 DUKE II	1996	2006	22	750	132	130	113	KTM DK II	HB162	ACCIAIO / steel
640	640 DUKE II	1996	2006	22	750	132	130	113	KTM DK II	HB163	ACCIAIO / steel
KYMCO											
150	MXER 150	2004	2004	22	750	132	130	113	L2	HB175	ALLUMINIO / aluminium
125	MXER 150	2002	2003	22	755	134	146	102	L2	HB152	ALLUMINIO / aluminium

STREET RACING

INDICE ANALITICO MANUBRI / handlebars index

CC	MODELLO Model	ANNI / years DA From	A To	Ø	QUOTE / Dimensions A	B	C	D	TELAIO Chassis	CODICE Reference	MATERIALE Raw material
125	MXER 150	2002	2003	22	820	87	145	75	L2	HB167	ALLUMINIO / aluminium
125	MXER 150	2002	2003	22	755	134	146	102	L2	HB150	ACCIAIO / steel
125	MXER 150	2002	2003	22	755	134	146	102	L2	HB151	ACCIAIO / steel
150	MXER 150	2004	2004	22	750	132	130	113	L2	HB162	ACCIAIO / steel
150	MXER 150	2004	2004	22	750	132	130	113	L2	HB163	ACCIAIO / steel
250	KXR 250	2003	2004	22	750	132	130	113	L3	HB175	ALLUMINIO / aluminium
250	KXR 250	2003	2004	22	755	134	146	102	L3	HB152	ALLUMINIO / aluminium
250	KXR 250	2003	2004	22	820	87	145	75	L3	HB167	ALLUMINIO / aluminium
250	KXR 250	2003	2004	22	755	134	146	102	L3	HB150	ACCIAIO / steel
250	KXR 250	2003	2004	22	755	134	146	102	L3	HB151	ACCIAIO / steel
250	KXR 250	2003	2004	22	750	132	130	113	L3	HB162	ACCIAIO / steel
250	KXR 250	2003	2004	22	750	132	130	113	L3	HB163	ACCIAIO / steel
MOTO GUZZI											
750	Breva 750 i.e.	2003	2007	22	755	134	146	102	LL	HB152	ALLUMINIO / aluminium
750	Breva 750 i.e.	2003	2007	22	820	87	145	75	LL	HB167	ALLUMINIO / aluminium
750	Breva 750 i.e.	2003	2007	22	755	134	146	102	LL	HB150	ACCIAIO / steel
750	Breva 750 i.e.	2003	2007	22	755	134	146	102	LL	HB151	ACCIAIO / steel
850	Breva 850	2006	2008	22	755	134	146	102	LP	HB152	ALLUMINIO / aluminium
850	Breva 850	2006	2008	22	820	87	145	75	LP	HB167	ALLUMINIO / aluminium
850	Breva 850	2006	2008	22	755	134	146	102	LP	HB150	ACCIAIO / steel
850	Breva 850	2006	2008	22	755	134	146	102	LP	HB151	ACCIAIO / steel
1000	V11 CAFFE'	2003	2006	28	745	90	130	135		HB173	ALLUMINIO / aluminium
1200	Griso 8V	2005	2016	22	755	134	146	102	LS	HB152	ALLUMINIO / aluminium
1200	1200 Sport 4V	2006	2013	22	755	134	146	102	LP	HB152	ALLUMINIO / aluminium
1200	Griso 8V	2005	2016	22	820	87	145	75	LS	HB167	ALLUMINIO / aluminium
1200	1200 Sport 4V	2006	2013	22	820	87	145	75	LP	HB167	ALLUMINIO / aluminium
1200	Griso 8V	2005	2016	22	755	134	146	102	LS	HB150	ACCIAIO / steel
1200	1200 Sport 4V	2006	2013	22	755	134	146	102	LP	HB150	ACCIAIO / steel
1200	Griso 8V	2005	2016	22	755	134	146	102	LS	HB151	ACCIAIO / steel
1200	1200 Sport 4V	2006	2013	22	755	134	146	102	LP	HB151	ACCIAIO / steel
MOTO MORINI											
1200	CORSARO 1200	2006	2016	28	745	90	130	135		HB173	ALLUMINIO / aluminium
1200	CORSARO 1200 VEL.	2006	2016	28	745	90	130	135		HB173	ALLUMINIO / aluminium
1200	9 1/2	2007	2008	22	755	134	146	102	2	HB152	ALLUMINIO / aluminium
1200	Corsaro / Avio / Veloce 1200	2005	2009	22	755	134	146	102	1	HB152	ALLUMINIO / aluminium
1200	9 1/2	2007	2008	22	820	87	145	75	2	HB167	ALLUMINIO / aluminium
1200	Corsaro / Avio / Veloce 1200	2005	2009	22	820	87	145	75	1	HB167	ALLUMINIO / aluminium
1200	9 1/2	2007	2008	22	755	134	146	102	2	HB150	ACCIAIO / steel
1200	Corsaro / Avio / Veloce 1200	2005	2009	22	755	134	146	102	1	HB150	ACCIAIO / steel
1200	9 1/2	2007	2008	22	755	134	146	102	2	HB151	ACCIAIO / steel
1200	Corsaro / Avio / Veloce 1200	2005	2009	22	755	134	146	102	1	HB151	ACCIAIO / steel
MV AGUSTA											
900	Brutale 989 R	2008	2008	22	755	134	146	102	F4	HB152	ALLUMINIO / aluminium
900	Brutale 989 R	2008	2008	22	820	87	145	75	F4	HB167	ALLUMINIO / aluminium
900	Brutale 989 R	2008	2008	22	755	134	146	102	F4	HB150	ACCIAIO / steel
900	Brutale 989 R	2008	2008	22	755	134	146	102	F4	HB151	ACCIAIO / steel
1078	Brutale 1078 RR	1994	2016	22	755	134	146	102	F4	HB152	ALLUMINIO / aluminium
1078	Brutale 1078 RR	1994	2016	22	820	87	145	75	F4	HB167	ALLUMINIO / aluminium
1078	Brutale 1078 RR	1994	2016	22	755	134	146	102	F4	HB150	ACCIAIO / steel
1078	Brutale 1078 RR	1994	2016	22	755	134	146	102	F4	HB151	ACCIAIO / steel
MZ											
125	RT 125	2000	2002	22	750	132	130	113	RT 125	HB175	ALLUMINIO / aluminium
125	RT 125	2000	2002	22	750	132	130	113	RT 125	HB162	ACCIAIO / steel
125	RT 125	2000	2002	22	750	132	130	113	RT 125	HB163	ACCIAIO / steel
POLARIS											
50	Predator 50	2014	2015	22	750	132	130	113	Predator 50	HB175	ALLUMINIO / aluminium

ACCOSSATO

STREET RACING

INDICE ANALITICO MANUBRI / handlebars index

CC	MODELLO Model	ANNI / years DA From	A To	Ø	QUOTE / Dimensions A	B	C	D	TELAIO Chassis	CODICE Reference	MATERIALE Raw material
50	Predator 50	2014	2015	22	750	132	130	113	Predator 50	HB162	ACCIAIO / steel
50	Predator 50	2014	2015	22	750	132	130	113	Predator 50	HB163	ACCIAIO / steel
90	Predator 90	2003	2005	22	750	132	130	113	Predator 90	HB175	ALLUMINIO / aluminium
90	Predator 90	2003	2005	22	750	132	130	113	Predator 90	HB162	ACCIAIO / steel
90	Predator 90	2003	2005	22	750	132	130	113	Predator 90	HB163	ACCIAIO / steel
250	Trail Blazer 250	2005	2016	22	750	132	130	113	Trail Blazer 250 E	HB175	ALLUMINIO / aluminium
250	Trail Blazer 250	2005	2016	22	750	132	130	113	Trail Blazer 250 E	HB162	ACCIAIO / steel
250	Trail Blazer 250	2005	2016	22	750	132	130	113	Trail Blazer 250 E	HB163	ACCIAIO / steel
330	Trail Boss 330	2007	2013	22	750	132	130	113	Trail Boss 330 E	HB175	ALLUMINIO / aluminium
330	Trail Boss 330	2007	2013	22	750	132	130	113	Trail Boss 330 E	HB162	ACCIAIO / steel
330	Trail Boss 330	2007	2013	22	750	132	130	113	Trail Boss 330 E	HB163	ACCIAIO / steel
499	Predator 501	2007	2012	22	750	132	130	113	Predator 500 E	HB175	ALLUMINIO / aluminium
499	Predator 501	2007	2012	22	750	132	130	113	Predator 500 E	HB162	ACCIAIO / steel
499	Predator 501	2007	2012	22	750	132	130	113	Predator 500 E	HB163	ACCIAIO / steel
500	Predator 500	2007	2012	22	750	132	130	113	Predator 500 E	HB175	ALLUMINIO / aluminium
500	Scrambler 500	2007	2012	22	750	132	130	113	Scrambler 500 E	HB175	ALLUMINIO / aluminium
500	Predator 500	2007	2012	22	750	132	130	113	Predator 500 E	HB162	ACCIAIO / steel
500	Scrambler 500	2007	2012	22	750	132	130	113	Scrambler 500 E	HB162	ACCIAIO / steel
500	Predator 500	2007	2012	22	750	132	130	113	Predator 500 E	HB163	ACCIAIO / steel
500	Scrambler 500	2007	2012	22	750	132	130	113	Scrambler 500 E	HB163	ACCIAIO / steel
SACHS											
650	Roadster 650 V1	2000	2005	22	755	134	146	102	830	HB152	ALLUMINIO / aluminium
650	Roadster 650 V1	2000	2005		820	87	145	75	830	HB167	ALLUMINIO / aluminium
650	Roadster 650 V1	2000	2005		755	134	146	102	830	HB150	ACCIAIO / steel
650	Roadster 650 V1	2000	2005		755	134	146	102	830	HB151	ACCIAIO / steel
800	Roadster 800 V2	2000	2005	22	755	134	146	102	835	HB152	ALLUMINIO / aluminium
800	Roadster 800 V2	2000	2005	22	820	87	145	75	835	HB167	ALLUMINIO / aluminium
800	Roadster 800 V2	2000	2005	22	755	134	146	102	835	HB150	ACCIAIO / steel
800	Roadster 800 V2	2000	2005	22	755	134	146	102	835	HB151	ACCIAIO / steel
SUZUKI											
125	DR 125	2016	2017	22	750	132	130	113	SF43B	HB175	ALLUMINIO / aluminium
125	DR 125	1994	1995	22	750	132	130	113	SF44A	HB175	ALLUMINIO / aluminium
125	DR 125 SM	2009	2010	22	750	132	130	113	CS	HB175	ALLUMINIO / aluminium
125	DR 125	1994	1995	22	755	134	146	102	SF44A	HB152	ALLUMINIO / aluminium
125	DR 125	1994	1995	22	820	87	145	75	SF44A	HB167	ALLUMINIO / aluminium
125	DR 125	1994	1995	22	755	134	146	102	SF44A	HB150	ACCIAIO / steel
125	DR 125	1994	1995	22	755	134	146	102	SF44A	HB151	ACCIAIO / steel
125	DR 125	2016	2017	22	750	132	130	113	SF43B	HB162	ACCIAIO / steel
125	DR 125	1994	1995	22	750	132	130	113	SF44A	HB162	ACCIAIO / steel
125	DR 125 SM	2009	2010	22	750	132	130	113	CS	HB162	ACCIAIO / steel
125	DR 125	2016	2017	22	750	132	130	113	SF43B	HB163	ACCIAIO / steel
125	DR 125	1994	1995	22	750	132	130	113	SF44A	HB163	ACCIAIO / steel
125	DR 125 SM	2009	2010	22	750	132	130	113	CS	HB163	ACCIAIO / steel
250	LTZ 250	2009	2010	22	750	132	130	113	AJ 4A A	HB175	ALLUMINIO / aluminium
250	LTF 250	1987	2002	22	750	132	130	113	LTF 250	HB175	ALLUMINIO / aluminium
250	LTZ 250	2009	2010	22	750	132	130	113	AJ 4A A	HB162	ACCIAIO / steel
250	LTZ 250	2009	2010	22	750	132	130	113	AJ 4A A	HB163	ACCIAIO / steel
300	LTF 300	1987	1989	22	750	132	130	113	LTF 300	HB175	ALLUMINIO / aluminium
350	DR 350	1990	1998	22	755	134	146	102	SK42B	HB152	ALLUMINIO / aluminium
350	DR 350	1990	1998	22	820	87	145	75	SK42B	HB167	ALLUMINIO / aluminium
350	DR 350	1990	1998	22	755	134	146	102	SK42B	HB150	ACCIAIO / steel
350	DR 350	1990	1998	22	755	134	146	102	SK42B	HB151	ACCIAIO / steel
400	DR-Z 400 SM	2005	2009	22	750	132	130	113	WVBC	HB175	ALLUMINIO / aluminium
400	LTA 400	2008	2011	22	750	132	130	113	LTA 400	HB175	ALLUMINIO / aluminium
400	LTF 400	2008	2012	22	750	132	130	113	LTF 400	HB175	ALLUMINIO / aluminium
400	LTZ 400	2004	2012	22	750	132	130	113	S4/AK/47	HB175	ALLUMINIO / aluminium
400	DR-Z 400 S	2000	2009	22	755	134	146	102	WVBC	HB152	ALLUMINIO / aluminium
400	DR-Z 400 SM	2005	2009	22	755	134	146	102	WVB8	HB152	ALLUMINIO / aluminium
400	GSF 400 Bandit	1991	1993	22	755	134	146	102	GK75B	HB152	ALLUMINIO / aluminium

STREET RACING

INDICE ANALITICO MANUBRI / handlebars index

CC	MODELLO Model	ANNI / years DA From	ANNI / years A To	Ø	QUOTE / Dimensions A	B	C	D	TELAIO Chassis	CODICE Reference	MATERIALE Raw material
400	DR-Z 400 S	2000	2009	22	820	87	145	75	WVBC	HB167	ALLUMINIO / aluminium
400	DR-Z 400 SM	2005	2009	22	820	87	145	75	WVB8	HB167	ALLUMINIO / aluminium
400	GSF 400 Bandit	1991	1993	22	820	87	145	75	GK75B	HB167	ALLUMINIO / aluminium
400	DR-Z 400 S	2000	2009	22	755	134	146	102	WVBC	HB150	ACCIAIO / steel
400	DR-Z 400 SM	2005	2009	22	755	134	146	102	WVB8	HB150	ACCIAIO / steel
400	GSF 400 Bandit	1991	1993	22	755	134	146	102	GK75B	HB150	ACCIAIO / steel
400	DR-Z 400 S	2000	2009	22	755	134	146	102	WVBC	HB151	ACCIAIO / steel
400	DR-Z 400 SM	2005	2009	22	755	134	146	102	WVB8	HB151	ACCIAIO / steel
400	GSF 400 Bandit	1991	1993	22	755	134	146	102	GK75B	HB151	ACCIAIO / steel
400	DR-Z 400 SM	2005	2009	22	750	132	130	113	WVBC	HB162	ACCIAIO / steel
400	LTA 400	2008	2011	22	750	132	130	113	LTA 400	HB162	ACCIAIO / steel
400	LTF 400	2008	2012	22	750	132	130	113	LTF 400	HB162	ACCIAIO / steel
400	LTZ 400	2004	2012	22	750	132	130	113	S4/AK/47	HB162	ACCIAIO / steel
400	DR-Z 400 SM	2005	2009	22	750	132	130	113	WVBC	HB163	ACCIAIO / steel
400	LTA 400	2008	2011	22	750	132	130	113	LTA 400	HB163	ACCIAIO / steel
400	LTF 400	2008	2012	22	750	132	130	113	LTF 400	HB163	ACCIAIO / steel
400	LTZ 400	2004	2012	22	750	132	130	113	S4/AK/47	HB163	ACCIAIO / steel
500	GS 500	1989	1996	22	750	132	130	113	GM51B	HB175	ALLUMINIO / aluminium
500	GS 500	1989	1996	22	750	132	130	113	GM51A	HB175	ALLUMINIO / aluminium
500	GS 500	2001	2006	22	750	132	130	113	WVBK	HB175	ALLUMINIO / aluminium
500	GS 500	2001	2002	22	750	132	130	113	BK	HB175	ALLUMINIO / aluminium
500	LTA 500 King Quad	2004	2012	22	750	132	130	113	TS 50	HB175	ALLUMINIO / aluminium
500	LTF 500	1998	2002	22	750	132	130	113	AM 41 A	HB175	ALLUMINIO / aluminium
500	GS 500 E	1989	1996	22	755	134	146	102	GM51B	HB152	ALLUMINIO / aluminium
500	GS 500 F	2007	2007	22	755	134	146	102	WVBK	HB152	ALLUMINIO / aluminium
500	GS 500	1989	1996	22	855	101	175	91	GM51B	HB174	ALLUMINIO / aluminium
500	GS 500	1989	1996	22	855	101	175	91	GM51A	HB174	ALLUMINIO / aluminium
500	GS 500	2001	2007	22	855	101	175	91	WVBK	HB174	ALLUMINIO / aluminium
500	GS 500	2001	2007	22	855	101	175	91	BK	HB174	ALLUMINIO / aluminium
500	GS 500 E	1989	1996	22	820	87	145	75	GM51B	HB167	ALLUMINIO / aluminium
500	GS 500 F	2007	2007	22	820	87	145	75	WVBK	HB167	ALLUMINIO / aluminium
500	GS 500 E	1989	1996	22	755	134	146	102	GM51B	HB150	ACCIAIO / steel
500	GS 500 F	2007	2007	22	755	134	146	102	WVBK	HB150	ACCIAIO / steel
500	GS 500 E	1989	1996	22	755	134	146	102	GM51B	HB151	ACCIAIO / steel
500	GS 500 F	2007	2007	22	755	134	146	102	WVBK	HB151	ACCIAIO / steel
500	GS 500	1989	1996	22	750	132	130	113	GM51B	HB162	ACCIAIO / steel
500	GS 500	1989	1996	22	750	132	130	113	GM51A	HB162	ACCIAIO / steel
500	GS 500	2001	2002	22	750	132	130	113	BK	HB162	ACCIAIO / steel
500	LTA 500 King Quad	2004	2012	22	750	132	130	113	TS 50	HB162	ACCIAIO / steel
500	GS 500	1989	1996	22	750	132	130	113	GM51B	HB163	ACCIAIO / steel
500	GS 500	1989	1996	22	750	132	130	113	GM51A	HB163	ACCIAIO / steel
500	GS 500	2001	2002	22	750	132	130	113	BK	HB163	ACCIAIO / steel
500	LTA 500 King Quad	2004	2012	22	750	132	130	113	TS 50	HB163	ACCIAIO / steel
600	DR 600	1985	1989	22	750	132	130	113	SN41A	HB175	ALLUMINIO / aluminium
600	GSF 600 Bandit	1995	1998	22	750	132	130	113	GN77B	HB175	ALLUMINIO / aluminium
600	GSF 600 Bandit	2000	2004	22	750	132	130	113	WVA8	HB175	ALLUMINIO / aluminium
600	GSR 600	2006	2010	22	750	132	130	113	WVB9	HB175	ALLUMINIO / aluminium
600	GSR 600	2006	2010	22	755	134	146	102	WVB9	HB152	ALLUMINIO / aluminium
600	GSF 600 Bandit / S	1995	1998	22	755	134	146	102	GN77B	HB152	ALLUMINIO / aluminium
600	GSF 600 Bandit / S	2000	2004	22	755	134	146	102	WVA8	HB152	ALLUMINIO / aluminium
600	DR 600	1985	1989	22	855	101	175	91	SN41A	HB174	ALLUMINIO / aluminium
600	GSF 600 Bandit	1995	1998	22	855	101	175	91	GN77B	HB174	ALLUMINIO / aluminium
600	GSF 600 Bandit	2000	2004	22	855	101	175	91	WVA8	HB174	ALLUMINIO / aluminium
600	GSR 600	2006	2010	22	855	101	175	91	WVB9	HB174	ALLUMINIO / aluminium
600	GSR600	2006	2010	22	690	130	125	132		HB172	ALLUMINIO / aluminium
600	GSR 600	2006	2010	22	820	87	145	75	WVB9	HB167	ALLUMINIO / aluminium
600	GSF 600 Bandit / S	1995	1998	22	820	87	145	75	GN77B	HB167	ALLUMINIO / aluminium
600	GSF 600 Bandit / S	2000	2004	22	820	87	145	75	WVA8	HB167	ALLUMINIO / aluminium
600	GSR 600	2006	2010	22	755	134	146	102	WVB9	HB150	ACCIAIO / steel
600	GSF 600 Bandit / S	1995	1998	22	755	134	146	102	GN77B	HB150	ACCIAIO / steel
600	GSF 600 Bandit / S	2000	2004	22	755	134	146	102	WVA8	HB150	ACCIAIO / steel

ACCOSSATO

STREET RACING

INDICE ANALITICO MANUBRI / handlebars index

CC	MODELLO Model	ANNI / years DA From	A To	Ø	QUOTE / Dimensions A	B	C	D	TELAIO Chassis	CODICE Reference	MATERIALE Raw material
600	GSR 600	2006	2010	22	755	134	146	102	WVB9	HB151	ACCIAIO / steel
600	GSF 600 Bandit / S	1995	1998	22	755	134	146	102	GN77B	HB151	ACCIAIO / steel
600	GSF 600 Bandit / S	2000	2004	22	755	134	146	102	WVA8	HB151	ACCIAIO / steel
600	DR 600	1985	1989	22	750	132	130	113	SN41A	HB162	ACCIAIO / steel
600	GSF 600 Bandit	1995	1998	22	750	132	130	113	GN77B	HB162	ACCIAIO / steel
600	GSF 600 Bandit	2000	2004	22	750	132	130	113	WVA8	HB162	ACCIAIO / steel
600	GSR 600	2006	2010	22	750	132	130	113	WVB9	HB162	ACCIAIO / steel
600	DR 600	1985	1989	22	750	132	130	113	SN41A	HB163	ACCIAIO / steel
600	GSF 600 Bandit	1995	1998	22	750	132	130	113	GN77B	HB163	ACCIAIO / steel
600	GSF 600 Bandit	2000	2004	22	750	132	130	113	WVA8	HB163	ACCIAIO / steel
600	GSR 600	2006	2010	22	750	132	130	113	WVB9	HB163	ACCIAIO / steel
650	GSF 650 Bandit	2005	2006	22	750	132	130	113	WVB5	HB175	ALLUMINIO / aluminium
650	GSF 650 Bandit, S	2007	2008	22	750	132	130	113	WVCJ	HB175	ALLUMINIO / aluminium
650	GSF 650 Bandit, S	2009	2012	22	750	132	130	113	WVCZ	HB175	ALLUMINIO / aluminium
650	GSX 650 F	2005	2012	22	750	132	130	113	WVCJ	HB175	ALLUMINIO / aluminium
650	DL 650 V-Strom	2004	2011	22	750	132	130	113	WVB1	HB175	ALLUMINIO / aluminium
650	DR 650	1990	1991	22	750	132	130	113	SP41B	HB175	ALLUMINIO / aluminium
650	DR 650	1990	1991	22	750	132	130	113	SP42B	HB175	ALLUMINIO / aluminium
650	DR 650	1991	1993	22	750	132	130	113	SP43B	HB175	ALLUMINIO / aluminium
650	DR 650	1992	1993	22	750	132	130	113	SP44B	HB175	ALLUMINIO / aluminium
650	DR 650	1994	1995	22	750	132	130	113	SP45B	HB175	ALLUMINIO / aluminium
650	DR 650	1996	1997	22	750	132	130	113	SP46B	HB175	ALLUMINIO / aluminium
650	SV 650 N	1999	2002	22	750	132	130	113	AV	HB175	ALLUMINIO / aluminium
650	SV 650 N	2003	2010	22	750	132	130	113	WVBY	HB175	ALLUMINIO / aluminium
650	SFV 650 Gladius	2009	2015	22	750	132	130	113	WVCX	HB175	ALLUMINIO / aluminium
650	XF 650 Freewind	1997	2001	22	750	132	130	113	AC	HB175	ALLUMINIO / aluminium
650	DL 650 V-Strom	2004	2011	22	755	134	146	102	WVB1	HB152	ALLUMINIO / aluminium
650	DR 650	1990	1991	22	755	134	146	102	SP41B	HB152	ALLUMINIO / aluminium
650	DR 650	1990	1991	22	755	134	146	102	SP42B	HB152	ALLUMINIO / aluminium
650	DR 650	1991	1993	22	755	134	146	102	SP43B	HB152	ALLUMINIO / aluminium
650	DR 650	1992	1993	22	755	134	146	102	SP44B	HB152	ALLUMINIO / aluminium
650	DR 650	1994	1995	22	755	134	146	102	SP45B	HB152	ALLUMINIO / aluminium
650	DR 650	1996	1997	22	755	134	146	102	SP46B	HB152	ALLUMINIO / aluminium
650	SV 650 N	1999	2002	22	755	134	146	102	AV	HB152	ALLUMINIO / aluminium
650	SV 650 N	2003	2010	22	755	134	146	102	WVBY	HB152	ALLUMINIO / aluminium
650	SFV 650 Gladius	2009	2015	22	755	134	146	102	WVCX	HB152	ALLUMINIO / aluminium
650	XF 650 Freewind	1997	2001	22	755	134	146	102	AC	HB152	ALLUMINIO / aluminium
650	GSF 650 Bandit	2005	2006	22	855	101	175	91	WVB5	HB174	ALLUMINIO / aluminium
650	GSF 650 Bandit, S	2007	2008	22	855	101	175	91	WVCJ	HB174	ALLUMINIO / aluminium
650	GSF 650 Bandit, S	2009	2012	22	855	101	175	91	WVCZ	HB174	ALLUMINIO / aluminium
650	DL 650 V-Strom	2004	2011	22	855	101	175	91	WVB1	HB174	ALLUMINIO / aluminium
650	SV 650 N	1999	2002	22	855	101	175	91	AV	HB174	ALLUMINIO / aluminium
650	SV 650 N	2003	2010	22	855	101	175	91	WVBY	HB174	ALLUMINIO / aluminium
650	SFV 650 Gladius	2009	2015	22	855	101	175	91	WVCX	HB174	ALLUMINIO / aluminium
650	SV650S	2015	2015	22	750	100	115	112		HB171	ALLUMINIO / aluminium
650	DL 650 V-Strom	2004	2011	22	820	87	145	75	WVB1	HB167	ALLUMINIO / aluminium
650	DR 650	1990	1991	22	820	87	145	75	SP41B	HB167	ALLUMINIO / aluminium
650	DR 650	1990	1991	22	820	87	145	75	SP42B	HB167	ALLUMINIO / aluminium
650	DR 650	1991	1993	22	820	87	145	75	SP43B	HB167	ALLUMINIO / aluminium
650	DR 650	1992	1993	22	820	87	145	75	SP44B	HB167	ALLUMINIO / aluminium
650	DR 650	1994	1995	22	820	87	145	75	SP45B	HB167	ALLUMINIO / aluminium
650	DR 650	1996	1997	22	820	87	145	75	SP46B	HB167	ALLUMINIO / aluminium
650	SV 650 N	1999	2002	22	820	87	145	75	AV	HB167	ALLUMINIO / aluminium
650	SV 650 N	2003	2010	22	820	87	145	75	WVBY	HB167	ALLUMINIO / aluminium
650	SFV 650 Gladius	2009	2015	22	820	87	145	75	WVCX	HB167	ALLUMINIO / aluminium
650	XF 650 Freewind	1997	2001	22	820	87	145	75	AC	HB167	ALLUMINIO / aluminium
650	GSF 650 Bandit / S	2005	2006	22	755	134	146	102	WVB5	HB150	ACCIAIO / steel
650	GSF 650 Bandit / S	2007	2008	22	755	134	146	102	WVCJ	HB150	ACCIAIO / steel
650	DL 650 V-Strom	2004	2011	22	755	134	146	102	WVB1	HB150	ACCIAIO / steel
650	DR 650	1990	1991	22	755	134	146	102	SP41B	HB150	ACCIAIO / steel
650	DR 650	1990	1991	22	755	134	146	102	SP42B	HB150	ACCIAIO / steel

STREET RACING

INDICE ANALITICO MANUBRI / handlebars index

CC	MODELLO Model	ANNI / years DA From	A To	Ø	QUOTE / Dimensions A	B	C	D	TELAIO Chassis	CODICE Reference	MATERIALE Raw material
650	DR 650	1991	1993	22	755	134	146	102	SP43B	HB150	ACCIAIO / steel
650	DR 650	1992	1993	22	755	134	146	102	SP44B	HB150	ACCIAIO / steel
650	DR 650	1994	1995	22	755	134	146	102	SP45B	HB150	ACCIAIO / steel
650	DR 650	1996	1997	22	755	134	146	102	SP46B	HB150	ACCIAIO / steel
650	SV 650 N	1999	2002	22	755	134	146	102	AV	HB150	ACCIAIO / steel
650	SV 650 N	2003	2010	22	755	134	146	102	WVBY	HB150	ACCIAIO / steel
650	SFV 650 Gladius	2009	2015	22	755	134	146	102	WVCX	HB150	ACCIAIO / steel
650	XF 650 Freewind	1997	2001	22	755	134	146	102	AC	HB150	ACCIAIO / steel
650	DL 650 V-Strom	2004	2011	22	755	134	146	102	WVB1	HB151	ACCIAIO / steel
650	DR 650	1990	1991	22	755	134	146	102	SP41B	HB151	ACCIAIO / steel
650	DR 650	1990	1991	22	755	134	146	102	SP42B	HB151	ACCIAIO / steel
650	DR 650	1991	1993	22	755	134	146	102	SP43B	HB151	ACCIAIO / steel
650	DR 650	1992	1993	22	755	134	146	102	SP44B	HB151	ACCIAIO / steel
650	DR 650	1994	1995	22	755	134	146	102	SP45B	HB151	ACCIAIO / steel
650	DR 650	1996	1997	22	755	134	146	102	SP46B	HB151	ACCIAIO / steel
650	SV 650 N	1999	2002	22	755	134	146	102	AV	HB151	ACCIAIO / steel
650	SV 650 N	2003	2010	22	755	134	146	102	WVBY	HB151	ACCIAIO / steel
650	SFV 650 Gladius	2009	2015	22	755	134	146	102	WVCX	HB151	ACCIAIO / steel
650	XF 650 Freewind	1997	2001	22	755	134	146	102	AC	HB151	ACCIAIO / steel
650	GSF 650 Bandit	2005	2006	22	750	132	130	113	WVB5	HB162	ACCIAIO / steel
650	GSF 650 Bandit, S	2007	2008	22	750	132	130	113	WVCJ	HB162	ACCIAIO / steel
650	GSF 650 Bandit, S	2009	2012	22	750	132	130	113	WVCZ	HB162	ACCIAIO / steel
650	GSX 650 F	2005	2012	22	750	132	130	113	WVCJ	HB162	ACCIAIO / steel
650	DL 650 V-Strom	2004	2011	22	750	132	130	113	WVB1	HB162	ACCIAIO / steel
650	DR 650	1990	1991	22	750	132	130	113	SP41B	HB162	ACCIAIO / steel
650	DR 650	1990	1991	22	750	132	130	113	SP42B	HB162	ACCIAIO / steel
650	DR 650	1991	1993	22	750	132	130	113	SP43B	HB162	ACCIAIO / steel
650	DR 650	1992	1993	22	750	132	130	113	SP44B	HB162	ACCIAIO / steel
650	DR 650	1994	1995	22	750	132	130	113	SP45B	HB162	ACCIAIO / steel
650	DR 650	1996	1997	22	750	132	130	113	SP46B	HB162	ACCIAIO / steel
650	SV 650 N	1999	2002	22	750	132	130	113	AV	HB162	ACCIAIO / steel
650	SV 650 N	2003	2010	22	750	132	130	113	WVBY	HB162	ACCIAIO / steel
650	SFV 650 Gladius	2009	2015	22	750	132	130	113	WVCX	HB162	ACCIAIO / steel
650	XF 650 Freewind	1997	2001	22	750	132	130	113	AC	HB162	ACCIAIO / steel
650	GSF 650 Bandit	2005	2006	22	750	132	130	113	WVB5	HB163	ACCIAIO / steel
650	GSF 650 Bandit, S	2007	2008	22	750	132	130	113	WVCJ	HB163	ACCIAIO / steel
650	GSF 650 Bandit, S	2009	2012	22	750	132	130	113	WVCZ	HB163	ACCIAIO / steel
650	GSX 650 F	2005	2012	22	750	132	130	113	WVCJ	HB163	ACCIAIO / steel
650	DL 650 V-Strom	2004	2011	22	750	132	130	113	WVB1	HB163	ACCIAIO / steel
650	DR 650	1990	1991	22	750	132	130	113	SP41B	HB163	ACCIAIO / steel
650	DR 650	1990	1991	22	750	132	130	113	SP42B	HB163	ACCIAIO / steel
650	DR 650	1991	1993	22	750	132	130	113	SP43B	HB163	ACCIAIO / steel
650	DR 650	1992	1993	22	750	132	130	113	SP44B	HB163	ACCIAIO / steel
650	DR 650	1994	1995	22	750	132	130	113	SP45B	HB163	ACCIAIO / steel
650	DR 650	1996	1997	22	750	132	130	113	SP46B	HB163	ACCIAIO / steel
650	SV 650 N	1999	2002	22	750	132	130	113	AV	HB163	ACCIAIO / steel
650	SV 650 N	2003	2010	22	750	132	130	113	WVBY	HB163	ACCIAIO / steel
650	SFV 650 Gladius	2009	2015	22	750	132	130	113	WVCX	HB163	ACCIAIO / steel
650	XF 650 Freewind	1997	2001	22	750	132	130	113	AC	HB163	ACCIAIO / steel
650	SV650	2003	2010	22	722	63	165	122	BY11	HB164	ACCIAIO / steel
650	SV650	2003	2010	22	669	96	90	122	BY11	HB165	ACCIAIO / steel
650	SV650	2003	2010	22	669	76	100	122	BY11	HB166	ACCIAIO / steel
700	LTA 700 X	2006	2007	22	750	132	130	113	AP 41 A	HB175	ALLUMINIO / aluminium
700	LTA 700 King Quad	2006	2007	22	750	132	130	113	S7/AP/41	HB175	ALLUMINIO / aluminium
700	Quadrunner 700	2004	2017	22	750	132	130	113	TS 70	HB175	ALLUMINIO / aluminium
700	LTA 700 X	2006	2007	22	750	132	130	113	AP 41 A	HB162	ACCIAIO / steel
700	LTA 700 King Quad	2006	2007	22	750	132	130	113	S7/AP/41	HB162	ACCIAIO / steel
700	LTA 700 X	2006	2007	22	750	132	130	113	AP 41 A	HB163	ACCIAIO / steel
700	LTA 700 King Quad	2006	2007	22	750	132	130	113	S7/AP/41	HB163	ACCIAIO / steel
750	GSR 750	2011	2016	22	750	132	130	113	C5	HB175	ALLUMINIO / aluminium
750	GSX 750	1998	2001	22	750	132	130	113	AE	HB175	ALLUMINIO / aluminium

ACCOSSATO

STREET RACING

INDICE ANALITICO MANUBRI / handlebars index

CC	MODELLO Model	ANNI / years DA From	A To	Ø	QUOTE / Dimensions A	B	C	D	TELAIO Chassis	CODICE Reference	MATERIALE Raw material
750	GSX 750	1998	2001	22	755	134	146	102	AE	HB152	ALLUMINIO / aluminium
750	GSR 750	2011	2016	22	855	101	175	91	C5	HB174	ALLUMINIO / aluminium
750	GSX 750	1998	2001	22	855	101	175	91	AE	HB174	ALLUMINIO / aluminium
750	GSX 750	1998	2001	22	820	87	145	75	AE	HB167	ALLUMINIO / aluminium
750	GSX 750	1998	2001	22	755	134	146	102	AE	HB150	ACCIAIO / steel
750	GSX 750	1998	2001	22	755	134	146	102	AE	HB151	ACCIAIO / steel
750	GSR 750	2011	2016	22	750	132	130	113	C5	HB162	ACCIAIO / steel
750	GSX 750	1998	2001	22	750	132	130	113	AE	HB162	ACCIAIO / steel
750	GSR 750	2011	2016	22	750	132	130	113	C5	HB163	ACCIAIO / steel
750	GSX 750	1998	2001	22	750	132	130	113	AE	HB163	ACCIAIO / steel
800	DR 800	1991	1993	22	750	132	130	113	SR42B	HB175	ALLUMINIO / aluminium
800	DR 800	1991	1993	22	750	132	130	113	SR43B	HB175	ALLUMINIO / aluminium
800	DR 800	1991	1993	22	755	134	146	102	SR42B	HB152	ALLUMINIO / aluminium
800	DR 800	1991	1993	22	755	134	146	102	SR43B	HB152	ALLUMINIO / aluminium
800	DR 800	1991	1993	22	820	87	145	75	SR42B	HB167	ALLUMINIO / aluminium
800	DR 800	1991	1993	22	820	87	145	75	SR43B	HB167	ALLUMINIO / aluminium
800	DR 800	1991	1993	22	755	134	146	102	SR42B	HB150	ACCIAIO / steel
800	DR 800	1991	1993	22	755	134	146	102	SR43B	HB150	ACCIAIO / steel
800	DR 800	1991	1993	22	755	134	146	102	SR42B	HB151	ACCIAIO / steel
800	DR 800	1991	1993	22	755	134	146	102	SR43B	HB151	ACCIAIO / steel
800	DR 800	1991	1993	22	750	132	130	113	SR42B	HB162	ACCIAIO / steel
800	DR 800	1991	1993	22	750	132	130	113	SR43B	HB162	ACCIAIO / steel
800	DR 800	1991	1993	22	750	132	130	113	SR42B	HB163	ACCIAIO / steel
800	DR 800	1991	1993	22	750	132	130	113	SR43B	HB163	ACCIAIO / steel
1000	DL 1000 V-Strom	2002	2010	22	750	132	130	113	WVBS	HB175	ALLUMINIO / aluminium
1000	SV 1000 N	2003	2007	22	750	132	130	113	WVBX	HB175	ALLUMINIO / aluminium
1000	DL 1000 V-Strom	2002	2010	22	755	134	146	102	WVBS	HB152	ALLUMINIO / aluminium
1000	SV 1000 N	2003	2007	22	755	134	146	102	WVBX	HB152	ALLUMINIO / aluminium
1000	DL 1000 V-Strom	2006	2010	22	855	101	175	91	WVBS	HB174	ALLUMINIO / aluminium
1000	SV 1000 N	2003	2007	22	855	101	175	91	WVBX	HB174	ALLUMINIO / aluminium
1000	DL 1000 V-Strom	2002	2010	22	820	87	145	75	WVBS	HB167	ALLUMINIO / aluminium
1000	SV 1000 N	2003	2007	22	820	87	145	75	WVBX	HB167	ALLUMINIO / aluminium
1000	DL 1000 V-Strom	2002	2010	22	755	134	146	102	WVBS	HB150	ACCIAIO / steel
1000	SV 1000 N	2003	2007	22	755	134	146	102	WVBX	HB150	ACCIAIO / steel
1000	DL 1000 V-Strom	2002	2010	22	755	134	146	102	WVBS	HB151	ACCIAIO / steel
1000	SV 1000 N	2003	2007	22	755	134	146	102	WVBX	HB151	ACCIAIO / steel
1000	DL 1000 V-Strom	2002	2010	22	750	132	130	113	WVBS	HB162	ACCIAIO / steel
1000	SV 1000 N	2003	2007	22	750	132	130	113	WVBX	HB162	ACCIAIO / steel
1000	DL 1000 V-Strom	2002	2010	22	750	132	130	113	WVBS	HB163	ACCIAIO / steel
1000	SV 1000 N	2003	2007	22	750	132	130	113	WVBX	HB163	ACCIAIO / steel
1100	GSX 1100 G	1986	1988	22	750	132	130	113	GV74A	HB175	ALLUMINIO / aluminium
1100	GSX 1100 G	1986	1988	22	755	134	146	102	GV74A	HB152	ALLUMINIO / aluminium
1100	GSX 1100 G	1986	1988	22	855	101	175	91	GV74A	HB174	ALLUMINIO / aluminium
1100	GSX 1100 G	1986	1988	22	820	87	145	75	GV74A	HB167	ALLUMINIO / aluminium
1100	GSX 1100 G	1986	1988	22	755	134	146	102	GV74A	HB150	ACCIAIO / steel
1100	GSX 1100 G	1986	1988	22	755	134	146	102	GV74A	HB151	ACCIAIO / steel
1100	GSX 1100 G	1986	1988	22	750	132	130	113	GV74A	HB162	ACCIAIO / steel
1100	GSX 1100 G	1986	1988	22	750	132	130	113	GV74A	HB163	ACCIAIO / steel
1200	GSF 1200 N, S	1996	2000	22	750	132	130	113	GV 75A	HB175	ALLUMINIO / aluminium
1200	GSF 1200 N, S	2001	2005	22	750	132	130	113	WVA9	HB175	ALLUMINIO / aluminium
1200	GSF 1200 N, S	2006	2006	22	750	132	130	113	WVCB	HB175	ALLUMINIO / aluminium
1200	GSX 1200	1999	2001	22	750	132	130	113	A3	HB175	ALLUMINIO / aluminium
1200	GSF 1200 Bandit / S	1996	2000	22	755	134	146	102	GV75A	HB152	ALLUMINIO / aluminium
1200	GSF 1200 Bandit / S	1996	2000	22	755	134	146	102	WVA9	HB152	ALLUMINIO / aluminium
1200	GSF 1200 Bandit / S	1996	2000	22	755	134	146	102	WVCB	HB152	ALLUMINIO / aluminium
1200	GSX 1200	1999	2001	22	755	134	146	102	A3	HB152	ALLUMINIO / aluminium
1200	GSF 1200 N, S	1996	2000	22	855	101	175	91	GV 75A	HB174	ALLUMINIO / aluminium
1200	GSF 1200 N, S	2001	2005	22	855	101	175	91	WVA9	HB174	ALLUMINIO / aluminium
1200	GSF 1200 N, S	2006	2006	22	855	101	175	91	WVCB	HB174	ALLUMINIO / aluminium
1200	GSX 1200	1999	2001	22	855	101	175	91	A3	HB174	ALLUMINIO / aluminium
1200	GSF 1200 Bandit / S	1996	2000	22	820	87	145	75	GV75A	HB167	ALLUMINIO / aluminium

STREET RACING

INDICE ANALITICO MANUBRI / handlebars index

CC	MODELLO Model	ANNI / years DA From	A To	Ø	QUOTE / Dimensions A	B	C	D	TELAIO Chassis	CODICE Reference	MATERIALE Raw material
1200	GSF 1200 Bandit / S	1996	2000	22	820	87	145	75	WVA9	HB167	ALLUMINIO / aluminium
1200	GSF 1200 Bandit / S	1996	2000	22	820	87	145	75	WVCB	HB167	ALLUMINIO / aluminium
1200	GSX 1200	1999	2001	22	820	87	145	75	A3	HB167	ALLUMINIO / aluminium
1200	GSF 1200 Bandit / S	1996	2000	22	755	134	146	102	GV75A	HB150	ACCIAIO / steel
1200	GSF 1200 Bandit / S	1996	2000	22	755	134	146	102	WVA9	HB150	ACCIAIO / steel
1200	GSF 1200 Bandit / S	1996	2000	22	755	134	146	102	WVCB	HB150	ACCIAIO / steel
1200	GSX 1200	1999	2001	22	755	134	146	102	A3	HB150	ACCIAIO / steel
1200	GSF 1200 Bandit / S	1996	2000	22	755	134	146	102	GV75A	HB151	ACCIAIO / steel
1200	GSF 1200 Bandit / S	1996	2000	22	755	134	146	102	WVA9	HB151	ACCIAIO / steel
1200	GSF 1200 Bandit / S	1996	2000	22	755	134	146	102	WVCB	HB151	ACCIAIO / steel
1200	GSX 1200	1999	2001	22	755	134	146	102	A3	HB151	ACCIAIO / steel
1200	GSF 1200 N, S	1996	2000	22	750	132	130	113	GV 75A	HB162	ACCIAIO / steel
1200	GSF 1200 N, S	2001	2005	22	750	132	130	113	WVA9	HB162	ACCIAIO / steel
1200	GSF 1200 N, S	2006	2006	22	750	132	130	113	WVCB	HB162	ACCIAIO / steel
1200	GSX 1200	1999	2001	22	750	132	130	113	A3	HB162	ACCIAIO / steel
1200	GSF 1200 N, S	1996	2000	22	750	132	130	113	GV 75A	HB163	ACCIAIO / steel
1200	GSF 1200 N, S	2001	2005	22	750	132	130	113	WVA9	HB163	ACCIAIO / steel
1200	GSF 1200 N, S	2006	2006	22	750	132	130	113	WVCB	HB163	ACCIAIO / steel
1200	GSX 1200	1999	2001	22	750	132	130	113	A3	HB163	ACCIAIO / steel
1250	GSF 1250 N, S	2007	2016	22	750	132	130	113	WVCH	HB175	ALLUMINIO / aluminium
1250	GSX 1250 F	2010	2016	22	750	132	130	113	WVCH	HB175	ALLUMINIO / aluminium
1250	GSF 1250 Bandit / S	2007	2016	22	755	134	146	102	WVCH	HB150	ACCIAIO / steel
1250	GSF 1250 N, S	2007	2016	22	750	132	130	113	WVCH	HB162	ACCIAIO / steel
1250	GSX 1250 F	2010	2016	22	750	132	130	113	WVCH	HB162	ACCIAIO / steel
1250	GSF 1250 N, S	2007	2016	22	750	132	130	113	WVCH	HB163	ACCIAIO / steel
1250	GSX 1250 F	2010	2016	22	750	132	130	113	WVCH	HB163	ACCIAIO / steel
1300	B-King	2008	2010	22	755	134	146	102	WVCR	HB152	ALLUMINIO / aluminium
1300	B-King	2008	2010	22	820	87	145	75	WVCR	HB167	ALLUMINIO / aluminium
1300	B-King	2008	2010	22	755	134	146	102	WVCR	HB150	ACCIAIO / steel
1300	B-King	2008	2010	22	755	134	146	102	WVCR	HB151	ACCIAIO / steel
1400	GSX 1400	2002		22	750	132	130	113	WVBN	HB175	ALLUMINIO / aluminium
1400	GSX 1400	2002	2005	22	755	134	146	102	WVBN	HB152	ALLUMINIO / aluminium
1400	GSX 1400	2002	2007	22	855	101	175	91	WVBN	HB174	ALLUMINIO / aluminium
1400	GSX 1400	2002	2005	22	820	87	145	75	WVBN	HB167	ALLUMINIO / aluminium
1400	GSX 1400	2002	2005	22	755	134	146	102	WVBN	HB150	ACCIAIO / steel
1400	GSX 1400	2002	2005	22	755	134	146	102	WVBN	HB151	ACCIAIO / steel
1400	GSX 1400	2002		22	750	132	130	113	WVBN	HB162	ACCIAIO / steel
1400	GSX 1400	2002		22	750	132	130	113	WVBN	HB163	ACCIAIO / steel

TRIUMPH

600	Speed Four	2004	2007	22	755	134	146	102	806LB	HB152	ALLUMINIO / aluminium
600	Speed Four	2004	2007	22	820	87	145	75	806LB	HB167	ALLUMINIO / aluminium
600	Speed Four	2004	2007	22	755	134	146	102	806LB	HB150	ACCIAIO / steel
600	Speed Four	2004	2007	22	755	134	146	102	806LB	HB151	ACCIAIO / steel
675	Street Triple 675	2007	2014	22	750	132	130	113	D67LD	HB175	ALLUMINIO / aluminium
675	Street Triple	2007	2011	22	755	134	146	102	D67LD	HB152	ALLUMINIO / aluminium
675	Street Triple 675	2007	2014	22	855	101	175	91	D67LD	HB174	ALLUMINIO / aluminium
675	Street Triple	2007	2011	22	820	87	145	75	D67LD	HB167	ALLUMINIO / aluminium
675	Street Triple	2007	2011	22	755	134	146	102	D67LD	HB150	ACCIAIO / steel
675	Street Triple	2007	2011	22	755	134	146	102	D67LD	HB151	ACCIAIO / steel
675	Street Triple 675	2007	2014	22	750	132	130	113	D67LD	HB162	ACCIAIO / steel
675	Street Triple 675	2007	2014	22	750	132	130	113	D67LD	HB163	ACCIAIO / steel
800	Bonneville 800	2001	2014	22	750	132	130	113	908MD	HB175	ALLUMINIO / aluminium
800	Scrambler 800	2006	2014	22	750	132	130	113	986MG	HB175	ALLUMINIO / aluminium
800	Bonneville 800	2001	2014	22	855	101	175	91	908MD	HB174	ALLUMINIO / aluminium
800	Scrambler 800	2006	2014	22	855	101	175	91	986MG	HB174	ALLUMINIO / aluminium
800	Bonneville 800	2001	2014	22	750	132	130	113	908MD	HB162	ACCIAIO / steel
800	Scrambler 800	2006	2014	22	750	132	130	113	986MG	HB162	ACCIAIO / steel
800	Bonneville 800	2001	2014	22	750	132	130	113	908MD	HB163	ACCIAIO / steel
800	Scrambler 800	2006	2014	22	750	132	130	113	986MG	HB163	ACCIAIO / steel
885	Thunderbird Sport	1995	2014	22	750	132	130	113	T309RT	HB175	ALLUMINIO / aluminium

ACCOSSATO

STREET RACING

INDICE ANALITICO MANUBRI / handlebars index

CC	MODELLO Model	ANNI / years DA From	A To	Ø	QUOTE / Dimensions A	B	C	D	TELAIO Chassis	CODICE Reference	MATERIALE Raw material
885	Thunderbird Sport	1995	2014	22	755	134	146	102	T309RT	HB152	ALLUMINIO / aluminium
885	Thunderbird Sport	1995	2014	22	855	101	175	91	T309RT	HB174	ALLUMINIO / aluminium
885	Thunderbird Sport	1995	2014	22	820	87	145	75	T309RT	HB167	ALLUMINIO / aluminium
885	Thunderbird Sport	1995	2014	22	755	134	146	102	T309RT	HB150	ACCIAIO / steel
885	Thunderbird Sport	1995	2014	22	755	134	146	102	T309RT	HB151	ACCIAIO / steel
885	Thunderbird Sport	1995	2014	22	750	132	130	113	T309RT	HB162	ACCIAIO / steel
885	Thunderbird Sport	1995	2014	22	750	132	130	113	T309RT	HB163	ACCIAIO / steel
900	Bonneville 900	2001	2014	22	750	132	130	113	986MF	HB175	ALLUMINIO / aluminium
900	Speed Triple 900	1994	2014	22	750	132	130	113	T 509	HB175	ALLUMINIO / aluminium
900	Tiger 900	1993	2014	22	750	132	130	113	T400-T709	HB175	ALLUMINIO / aluminium
900	Trophy 900	1992	2014	22	750	132	130	113	T300	HB175	ALLUMINIO / aluminium
900	Thruxton 900	2005	2014	22	750	132	130	113	986ME	HB175	ALLUMINIO / aluminium
900	Bonneville America	2001	2014	22	755	134	146	102	908M	HB152	ALLUMINIO / aluminium
900	Legend TT	1998	2002	22	755	134	146	102	T309RT	HB152	ALLUMINIO / aluminium
900	Scrambler	2006	2016	22	755	134	146	102	986MG	HB152	ALLUMINIO / aluminium
900	Tiger 900	1993	2014	22	755	134	146	102	T400	HB152	ALLUMINIO / aluminium
900	Tiger 900	1993	2014	22	755	134	146	102	T709	HB152	ALLUMINIO / aluminium
900	Trophy 900	1992	2014	22	755	134	146	102	T300	HB152	ALLUMINIO / aluminium
900	Trophy 900	1992	2014	22	755	134	146	102	T300E	HB152	ALLUMINIO / aluminium
900	Bonneville 900	2001	2014	22	855	101	175	91	986MF	HB174	ALLUMINIO / aluminium
900	Speed Triple 900	1994	2014	22	855	101	175	91	T 509	HB174	ALLUMINIO / aluminium
900	Trophy 900	1992	2014	22	855	101	175	91	T300	HB174	ALLUMINIO / aluminium
900	Thruxton 900	2005	2014	22	855	101	175	91	986ME	HB174	ALLUMINIO / aluminium
900	Bonneville America	2001	2014	22	820	87	145	75	908M	HB167	ALLUMINIO / aluminium
900	Legend TT	1998	2002	22	820	87	145	75	T309RT	HB167	ALLUMINIO / aluminium
900	Scrambler	2006	2016	22	820	87	145	75	986MG	HB167	ALLUMINIO / aluminium
900	Tiger 900	1993	2014	22	820	87	145	75	T400	HB167	ALLUMINIO / aluminium
900	Tiger 900	1993	2014	22	820	87	145	75	T709	HB167	ALLUMINIO / aluminium
900	Trophy 900	1992	2014	22	820	87	145	75	T300	HB167	ALLUMINIO / aluminium
900	Trophy 900	1992	2014	22	820	87	145	75	T300E	HB167	ALLUMINIO / aluminium
900	Bonneville America	2001	2014	22	755	134	146	102	908M	HB150	ACCIAIO / steel
900	Legend TT	1998	2002	22	755	134	146	102	T309RT	HB150	ACCIAIO / steel
900	Scrambler	2006	2016	22	755	134	146	102	986MG	HB150	ACCIAIO / steel
900	Tiger 900	1993	2014	22	755	134	146	102	T400	HB150	ACCIAIO / steel
900	Tiger 900	1993	2014	22	755	134	146	102	T709	HB150	ACCIAIO / steel
900	Trophy 900	1992	2014	22	755	134	146	102	T300	HB150	ACCIAIO / steel
900	Trophy 900	1992	2014	22	755	134	146	102	T300E	HB150	ACCIAIO / steel
900	Bonneville America	2001	2014	22	755	134	146	102	908M	HB151	ACCIAIO / steel
900	Legend TT	1998	2002	22	755	134	146	102	T309RT	HB151	ACCIAIO / steel
900	Scrambler	2006	2016	22	755	134	146	102	986MG	HB151	ACCIAIO / steel
900	Tiger 900	1993	2014	22	755	134	146	102	T400	HB151	ACCIAIO / steel
900	Tiger 900	1993	2014	22	755	134	146	102	T709	HB151	ACCIAIO / steel
900	Trophy 900	1992	2014	22	755	134	146	102	T300	HB151	ACCIAIO / steel
900	Trophy 900	1992	2014	22	755	134	146	102	T300E	HB151	ACCIAIO / steel
900	Bonneville 900	2001	2014	22	750	132	130	113	986MF	HB162	ACCIAIO / steel
900	Speed Triple 900	1994	2014	22	750	132	130	113	T 509	HB162	ACCIAIO / steel
900	Tiger 900	1993	2014	22	750	132	130	113	T400	HB162	ACCIAIO / steel
900	Tiger 900	1993	2014	22	750	132	130	113	T709	HB162	ACCIAIO / steel
900	Trophy 900	1992	2014	22	750	132	130	113	T300	HB162	ACCIAIO / steel
900	Thruxton 900	2005	2014	22	750	132	130	113	986ME	HB162	ACCIAIO / steel
900	Bonneville 900	2001	2014	22	750	132	130	113	986MF	HB163	ACCIAIO / steel
900	Speed Triple 900	1994	2014	22	750	132	130	113	T 509	HB163	ACCIAIO / steel
900	Tiger 900	1993	2014	22	750	132	130	113	T400	HB163	ACCIAIO / steel
900	Tiger 900	1993	2014	22	750	132	130	113	T709	HB163	ACCIAIO / steel
900	Trophy 900	1992	2014	22	750	132	130	113	T300	HB163	ACCIAIO / steel
900	Thruxton 900	2005	2014	22	750	132	130	113	986ME	HB163	ACCIAIO / steel
955	Speed Triple 955	2002	2005	22	750	132	130	113	T 595	HB175	ALLUMINIO / aluminium
955	Tiger 955	2004	2006	22	750	132	130	113	709EN	HB175	ALLUMINIO / aluminium
955	Speed Triple 955i	1997	2004	22	755	134	146	102	595RPT	HB152	ALLUMINIO / aluminium
955	Speed Triple 955i	1997	2004	22	755	134	146	102	595N	HB152	ALLUMINIO / aluminium
955	Tiger 955	2004	2006	22	755	134	146	102	709EN	HB152	ALLUMINIO / aluminium

STREET RACING

INDICE ANALITICO MANUBRI / handlebars index

CC	MODELLO Model	ANNI / years DA From	A To	Ø	QUOTE / Dimensions A	B	C	D	TELAIO Chassis	CODICE Reference	MATERIALE Raw material
955	Speed Triple 955	2002	2005	22	855	101	175	91	T 595	HB174	ALLUMINIO / aluminium
955	Speed Triple 955i	1997	2004	22	820	87	145	75	595RPT	HB167	ALLUMINIO / aluminium
955	Speed Triple 955i	1997	2004	22	820	87	145	75	595N	HB167	ALLUMINIO / aluminium
955	Tiger 955	2004	2006	22	820	87	145	75	709EN	HB167	ALLUMINIO / aluminium
955	Speed Triple 955i	1997	2004	22	755	134	146	102	595RPT	HB150	ACCIAIO / steel
955	Speed Triple 955i	1997	2004	22	755	134	146	102	595N	HB150	ACCIAIO / steel
955	Tiger 955	2004	2006	22	755	134	146	102	709EN	HB150	ACCIAIO / steel
955	Speed Triple 955i	1997	2004	22	755	134	146	102	595RPT	HB151	ACCIAIO / steel
955	Speed Triple 955i	1997	2004	22	755	134	146	102	595N	HB151	ACCIAIO / steel
955	Tiger 955	2004	2006	22	755	134	146	102	709EN	HB151	ACCIAIO / steel
955	Speed Triple 955	2002	2005	22	750	132	130	113	T 595	HB162	ACCIAIO / steel
955	Tiger 955	2004	2006	22	750	132	130	113	709EN	HB162	ACCIAIO / steel
955	Speed Triple 955	2002	2005	22	750	132	130	113	T 595	HB163	ACCIAIO / steel
955	Tiger 955	2004	2006	22	750	132	130	113	709EN	HB163	ACCIAIO / steel
1050	Speed Triple 1050	1993	2017	22	750	132	130	113	515NJ	HB175	ALLUMINIO / aluminium
1050	Tiger 1050	2006	2012	22	750	132	130	113	115NG	HB175	ALLUMINIO / aluminium
1050	Speed Triple	1993	2017	22	755	134	146	102	T509	HB152	ALLUMINIO / aluminium
1050	Speed Triple 1050	1993	2017	22	755	134	146	102	515NJ	HB152	ALLUMINIO / aluminium
1050	Tiger 1050	2006	2012	22	755	134	146	102	115NG	HB152	ALLUMINIO / aluminium
1050	Speed Triple 1050	1993	2017	22	855	101	175	91	515NJ	HB174	ALLUMINIO / aluminium
1050	Speed Triple	1993	2017	22	820	87	145	75	T509	HB167	ALLUMINIO / aluminium
1050	Speed Triple 1050	1993	2017	22	820	87	145	75	515NJ	HB167	ALLUMINIO / aluminium
1050	Tiger 1050	2006	2012	22	820	87	145	75	115NG	HB167	ALLUMINIO / aluminium
1050	Speed Triple	1993	2017	22	755	134	146	102	T509	HB150	ACCIAIO / steel
1050	Speed Triple 1050	1993	2017	22	755	134	146	102	515NJ	HB150	ACCIAIO / steel
1050	Tiger 1050	2006	2012	22	755	134	146	102	115NG	HB150	ACCIAIO / steel
1050	Speed Triple	1993	2017	22	755	134	146	102	T509	HB151	ACCIAIO / steel
1050	Speed Triple 1050	1993	2017	22	755	134	146	102	515NJ	HB151	ACCIAIO / steel
1050	Tiger 1050	2006	2012	22	755	134	146	102	115NG	HB151	ACCIAIO / steel
1050	Speed Triple 1050	1993	2017	22	750	132	130	113	515NJ	HB162	ACCIAIO / steel
1050	Tiger 1050	2006	2012	22	750	132	130	113	115NG	HB162	ACCIAIO / steel
1050	Speed Triple 1050	1993	2017	22	750	132	130	113	515NJ	HB163	ACCIAIO / steel
1050	Tiger 1050	2006	2012	22	750	132	130	113	115NG	HB163	ACCIAIO / steel
1200	Trophy 1200	2013	2013	22	750	132	130	113	T300-T300E	HB175	ALLUMINIO / aluminium
1200	Trophy 1200	2013	2013	22	755	134	146	102	T300	HB152	ALLUMINIO / aluminium
1200	Trophy 1200	2013	2013	22	755	134	146	102	T300E	HB152	ALLUMINIO / aluminium
1200	Trophy 1200	2013	2013	22	855	101	175	91	T300	HB174	ALLUMINIO / aluminium
1200	Trophy 1200	2013	2013	22	855	101	175	91	T300E	HB174	ALLUMINIO / aluminium
1200	Trophy 1200	2013	2013	22	820	87	145	75	T300	HB167	ALLUMINIO / aluminium
1200	Trophy 1200	2013	2013	22	820	87	145	75	T300E	HB167	ALLUMINIO / aluminium
1200	Trophy 1200	2013	2013	22	755	134	146	102	T300	HB150	ACCIAIO / steel
1200	Trophy 1200	2013	2013	22	755	134	146	102	T300E	HB150	ACCIAIO / steel
1200	Trophy 1200	2013	2013	22	755	134	146	102	T300	HB151	ACCIAIO / steel
1200	Trophy 1200	2013	2013	22	755	134	146	102	T300E	HB151	ACCIAIO / steel
1200	Trophy 1200	2013	2013	22	750	132	130	113	T300	HB162	ACCIAIO / steel
1200	Trophy 1200	2013	2013	22	750	132	130	113	T300E	HB162	ACCIAIO / steel
1200	Trophy 1200	2013	2013	22	750	132	130	113	T300	HB163	ACCIAIO / steel
1200	Trophy 1200	2013	2013	22	750	132	130	113	T300E	HB163	ACCIAIO / steel

YAMAHA

125	DT 125 R	1999	2000	22	750	132	130	113	3RM	HB175	ALLUMINIO / aluminium
125	DT 125 R	1989	1997	22	750	132	130	113	4BL-DE03	HB175	ALLUMINIO / aluminium
125	DT 125 RE, X	2004	2006	22	750	132	130	113	DE06	HB175	ALLUMINIO / aluminium
125	TW 125	2003	2003	22	750	132	130	113	DE01	HB175	ALLUMINIO / aluminium
125	TW 125	2003	2003	22	750	132	130	113	DE05	HB175	ALLUMINIO / aluminium
125	WR 125 R, X	2009	2011	22	750	132	130	113	DE07	HB175	ALLUMINIO / aluminium
125	XT 125 R, X	2009	2014	22	750	132	130	113	74	HB175	ALLUMINIO / aluminium
125	YBR 125	2005	2005	22	750	132	130	113	RE04	HB175	ALLUMINIO / aluminium
125	YBR 125	2010	2014	22	750	132	130	113	RE05	HB175	ALLUMINIO / aluminium
125	TDR 125	1989	1994	22	755	134	146	102	5AN	HB152	ALLUMINIO / aluminium
125	YBR 125	2005	2005	22	855	101	175	91	RE04	HB174	ALLUMINIO / aluminium

ACCOSSATO

STREET RACING

INDICE ANALITICO MANUBRI / handlebars index

CC	MODELLO Model	ANNI / years DA From	ANNI / years A To	Ø	QUOTE / Dimensions A	B	C	D	TELAIO Chassis	CODICE Reference	MATERIALE Raw material
125	YBR 125	2007	2012	22	855	101	175	91	RE05	HB174	ALLUMINIO / aluminium
125	TDR 125	1989	1994	22	820	87	145	75	5AN	HB167	ALLUMINIO / aluminium
125	TDR 125	1989	1994	22	755	134	146	102	5AN	HB150	ACCIAIO / steel
125	TDR 125	1989	1994	22	755	134	146	102	5AN	HB151	ACCIAIO / steel
125	DT 125 R	1999	2000	22	750	132	130	113	3RM	HB162	ACCIAIO / steel
125	DT 125 R	1989	1997	22	750	132	130	113	4BL-DE03	HB162	ACCIAIO / steel
125	DT 125 RE, X	2004	2006	22	750	132	130	113	DE06	HB162	ACCIAIO / steel
125	TW 125	2003	2003	22	750	132	130	113	DE01	HB162	ACCIAIO / steel
125	TW 125	2003	2003	22	750	132	130	113	DE05	HB162	ACCIAIO / steel
125	WR 125 R, X	2009	2011	22	750	132	130	113	DE07	HB162	ACCIAIO / steel
125	XT 125 R, X	2009	2014	22	750	132	130	113	74	HB162	ACCIAIO / steel
125	YBR 125	2005	2005	22	750	132	130	113	RE04	HB162	ACCIAIO / steel
125	YBR 125	2010	2014	22	750	132	130	113	RE05	HB162	ACCIAIO / steel
125	DT 125 R	1999	2000	22	750	132	130	113	3RM	HB163	ACCIAIO / steel
125	DT 125 R	1989	1997	22	750	132	130	113	4BL-DE03	HB163	ACCIAIO / steel
125	DT 125 RE, X	2004	2006	22	750	132	130	113	DE06	HB163	ACCIAIO / steel
125	TW 125	2003	2003	22	750	132	130	113	DE01	HB163	ACCIAIO / steel
125	TW 125	2003	2003	22	750	132	130	113	DE05	HB163	ACCIAIO / steel
125	WR 125 R, X	2009	2011	22	750	132	130	113	DE07	HB163	ACCIAIO / steel
125	XT 125 R, X	2009	2014	22	750	132	130	113	74	HB163	ACCIAIO / steel
125	YBR 125	2005	2005	22	750	132	130	113	RE04	HB163	ACCIAIO / steel
125	YBR 125	2010	2014	22	750	132	130	113	RE05	HB163	ACCIAIO / steel
250	XG 250 Tricker	2005	2005	22	750	132	130	113	---	HB175	ALLUMINIO / aluminium
250	YFM 250 Bruin	2006	2005	22	750	132	130	113	YFM 250	HB175	ALLUMINIO / aluminium
250	XG 250 Tricker	2005	2005	22	750	132	130	113	---	HB162	ACCIAIO / steel
250	YFM 250 Bruin	2006	2005	22	750	132	130	113	YFM 250	HB162	ACCIAIO / steel
250	XG 250 Tricker	2005	2005	22	750	132	130	113	---	HB163	ACCIAIO / steel
250	YFM 250 Bruin	2006	2005	22	750	132	130	113	YFM 250	HB163	ACCIAIO / steel
350	YFM 350 R	2007	2013	22	750	132	130	113	Y3	HB175	ALLUMINIO / aluminium
350	YFM 350 R	2007	2013	22	750	132	130	113	Y3	HB162	ACCIAIO / steel
350	YFM 350 R	2007	2013	22	750	132	130	113	Y3	HB163	ACCIAIO / steel
400	XS 400	1977	1990	22	750	132	130	113	2A2,12F, 12E	HB175	ALLUMINIO / aluminium
400	XS 400	1977	1990	22	755	134	146	102	2A2	HB152	ALLUMINIO / aluminium
400	XS 400	1977	1990	22	855	101	175	91	2A2	HB174	ALLUMINIO / aluminium
400	XS 400	1977	1990	22	855	101	175	91	12F, 12E	HB174	ALLUMINIO / aluminium
400	XS 400	1977	1990	22	820	87	145	75	2A2	HB167	ALLUMINIO / aluminium
400	XS 400	1977	1990	22	755	134	146	102	2A2	HB150	ACCIAIO / steel
400	XS 400	1977	1990	22	755	134	146	102	2A2	HB151	ACCIAIO / steel
400	XS 400	1977	1990	22	750	132	130	113	2A2	HB162	ACCIAIO / steel
400	XS 400	1977	1990	22	750	132	130	113	12F, 12E	HB162	ACCIAIO / steel
400	XS 400	1977	1990	22	750	132	130	113	2A2	HB163	ACCIAIO / steel
400	XS 400	1977	1990	22	750	132	130	113	12F, 12E	HB163	ACCIAIO / steel
450	YFZ 450	2007	2013	22	750	132	130	113	Y45	HB175	ALLUMINIO / aluminium
450	YFZ 450	2007	2013	22	750	132	130	113	Y45	HB162	ACCIAIO / steel
450	YFZ 450	2007	2013	22	750	132	130	113	Y45	HB163	ACCIAIO / steel
500	SR 500	1978	1999	22	750	132	130	113	48T,1RU, 3EB	HB175	ALLUMINIO / aluminium
500	SR 500	1978	1999	22	755	134	146	102	2J4	HB152	ALLUMINIO / aluminium
500	SR 500	1978	1999	22	755	134	146	102	48T	HB152	ALLUMINIO / aluminium
500	SR 500	1978	1999	22	855	101	175	91	2J4, 2J2	HB174	ALLUMINIO / aluminium
500	SR 500	1978	1999	22	855	101	175	91	48T	HB174	ALLUMINIO / aluminium
500	SR 500	1978	1999	22	855	101	175	91	1RU, 3EB	HB174	ALLUMINIO / aluminium
500	SR 500	1978	1999	22	820	87	145	75	2J4	HB167	ALLUMINIO / aluminium
500	SR 500	1978	1999	22	820	87	145	75	48T	HB167	ALLUMINIO / aluminium
500	SR 500	1978	1999	22	755	134	146	102	2J4	HB150	ACCIAIO / steel
500	SR 500	1978	1999	22	755	134	146	102	48T	HB150	ACCIAIO / steel
500	SR 500	1978	1999	22	755	134	146	102	2J4	HB151	ACCIAIO / steel
500	SR 500	1978	1999	22	755	134	146	102	48T	HB151	ACCIAIO / steel
500	SR 500	1978	1999	22	750	132	130	113	2J4, 2J2	HB162	ACCIAIO / steel
500	SR 500	1978	1999	22	750	132	130	113	48T	HB162	ACCIAIO / steel
500	SR 500	1978	1999	22	750	132	130	113	1RU, 3EB	HB162	ACCIAIO / steel
500	SR 500	1978	1999	22	750	132	130	113	2J4, 2J2	HB163	ACCIAIO / steel

STREET RACING

INDICE ANALITICO MANUBRI / handlebars index

CC	MODELLO Model	ANNI / years DA From	ANNI / years A To	Ø	QUOTE / Dimensions A	B	C	D	TELAIO Chassis	CODICE Reference	MATERIALE Raw material
500	SR 500	1978	1999	22	750	132	130	113	48T	HB163	ACCIAIO / steel
500	SR 500	1978	1999	22	750	132	130	113	1RU, 3EB	HB163	ACCIAIO / steel
600	FZS 600 Fazer	1998	2003	22	750	132	130	113	RJ02	HB175	ALLUMINIO / aluminium
600	FZ 6, FZ 6S Fazer	2004	2006	22	750	132	130	113	RJ07	HB175	ALLUMINIO / aluminium
600	FZ 6, FZ 6S Fazer	2007	2008	22	750	132	130	113	RJ14	HB175	ALLUMINIO / aluminium
600	XJ 600 N, S	1992	2002	22	750	132	130	113	4BR	HB175	ALLUMINIO / aluminium
600	XJ 600 N, S	1992	2002	22	750	132	130	113	4LX	HB175	ALLUMINIO / aluminium
600	XJ 600 N,S	1992	2002	22	750	132	130	113	RJ01	HB175	ALLUMINIO / aluminium
600	XJ 6 , Diversion / F	2009	2015	22	750	132	130	113	RJ19	HB175	ALLUMINIO / aluminium
600	XJ 6	2013	2015	22	750	132	130	113	RJ22	HB175	ALLUMINIO / aluminium
600	FZS 600 Fazer	1998	2003	22	755	134	146	102	RJ02	HB152	ALLUMINIO / aluminium
600	FZ 6 / Fazer	2004	2006	22	755	134	146	102	RJ07	HB152	ALLUMINIO / aluminium
600	FZ 6 / Fazer / S2	2007	2008	22	755	134	146	102	RJ14	HB152	ALLUMINIO / aluminium
600	XJ 6 / Diversion	2009	2015	22	755	134	146	102	RJ19	HB152	ALLUMINIO / aluminium
600	XJ 600 N / S	1997	2002	22	755	134	146	102	4BR	HB152	ALLUMINIO / aluminium
600	XJ 600 N / S	1996	1996	22	755	134	146	102	4BRA	HB152	ALLUMINIO / aluminium
600	FZS 600 Fazer	1998	2003	22	855	101	175	91	RJ02	HB174	ALLUMINIO / aluminium
600	FZ 6, FZ 6S Fazer	2004	2006	22	855	101	175	91	RJ07	HB174	ALLUMINIO / aluminium
600	FZ 6, FZ 6S Fazer	2007	2008	22	855	101	175	91	RJ14	HB174	ALLUMINIO / aluminium
600	XJ 600 N, S	1997	2002	22	855	101	175	91	4BR	HB174	ALLUMINIO / aluminium
600	XJ 600 N, S	1992	2002	22	855	101	175	91	4LX	HB174	ALLUMINIO / aluminium
600	XJ 600 N,S	1992	2002	22	855	101	175	91	RJ01	HB174	ALLUMINIO / aluminium
600	XJ 6 , Diversion / F	2009	2015	22	855	101	175	91	RJ19	HB174	ALLUMINIO / aluminium
600	XJ 6	2013	2015	22	855	101	175	91	RJ22	HB174	ALLUMINIO / aluminium
600	FZ6	2004	2007	22	750	100	115	112		HB171	ALLUMINIO / aluminium
600	FZS 600 Fazer	1998	2003	22	820	87	145	75	RJ02	HB167	ALLUMINIO / aluminium
600	FZ 6 / Fazer	2004	2006	22	820	87	145	75	RJ07	HB167	ALLUMINIO / aluminium
600	FZ 6 / Fazer / S2	2007	2008	22	820	87	145	75	RJ14	HB167	ALLUMINIO / aluminium
600	XJ 6 / Diversion	2009	2015	22	820	87	145	75	RJ19	HB167	ALLUMINIO / aluminium
600	XJ 600 N / S	1997	2002	22	820	87	145	75	4BR	HB167	ALLUMINIO / aluminium
600	XJ 600 N / S	1996	1996	22	820	87	145	75	4BRA	HB167	ALLUMINIO / aluminium
600	FZS 600 Fazer	1998	2003	22	755	134	146	102	RJ02	HB150	ACCIAIO / steel
600	FZ 6 / Fazer	2004	2006	22	755	134	146	102	RJ07	HB150	ACCIAIO / steel
600	FZ 6 / Fazer / S2	2007	2008	22	755	134	146	102	RJ14	HB150	ACCIAIO / steel
600	XJ 6 / Diversion	2009	2015	22	755	134	146	102	RJ19	HB150	ACCIAIO / steel
600	XJ 600 N / S	1997	2002	22	755	134	146	102	4BR	HB150	ACCIAIO / steel
600	XJ 600 N / S	1996	1996	22	755	134	146	102	4BRA	HB150	ACCIAIO / steel
600	FZS 600 Fazer	1998	2003	22	755	134	146	102	RJ02	HB151	ACCIAIO / steel
600	FZ 6 / Fazer	2004	2006	22	755	134	146	102	RJ07	HB151	ACCIAIO / steel
600	FZ 6 / Fazer / S2	2007	2008	22	755	134	146	102	RJ14	HB151	ACCIAIO / steel
600	XJ 6 / Diversion	2009	2015	22	755	134	146	102	RJ19	HB151	ACCIAIO / steel
600	XJ 600 N / S	1997	2002	22	755	134	146	102	4BR	HB151	ACCIAIO / steel
600	XJ 600 N / S	1996	1996	22	755	134	146	102	4BRA	HB151	ACCIAIO / steel
600	FZS 600 Fazer	1998	2003	22	750	132	130	113	RJ02	HB162	ACCIAIO / steel
600	FZ 6, FZ 6S Fazer	2004	2006	22	750	132	130	113	RJ07	HB162	ACCIAIO / steel
600	FZ 6, FZ 6S Fazer	2007	2008	22	750	132	130	113	RJ14	HB162	ACCIAIO / steel
600	XJ 600 N, S	1992	2002	22	750	132	130	113	4BR	HB162	ACCIAIO / steel
600	XJ 600 N, S	1992	2002	22	750	132	130	113	4LX	HB162	ACCIAIO / steel
600	XJ 600 N,S	1992	2002	22	750	132	130	113	RJ01	HB162	ACCIAIO / steel
600	XJ 6 , Diversion / F	2009	2015	22	750	132	130	113	RJ19	HB162	ACCIAIO / steel
600	XJ 6	2013	2015	22	750	132	130	113	RJ22	HB162	ACCIAIO / steel
600	FZS 600 Fazer	1998	2003	22	750	132	130	113	RJ02	HB163	ACCIAIO / steel
600	FZ 6, FZ 6S Fazer	2004	2006	22	750	132	130	113	RJ07	HB163	ACCIAIO / steel
600	FZ 6, FZ 6S Fazer	2007	2008	22	750	132	130	113	RJ14	HB163	ACCIAIO / steel
600	XJ 600 N, S	1992	2002	22	750	132	130	113	4BR	HB163	ACCIAIO / steel
600	XJ 600 N, S	1992	2002	22	750	132	130	113	4LX	HB163	ACCIAIO / steel
600	XJ 600 N,S	1992	2002	22	750	132	130	113	RJ01	HB163	ACCIAIO / steel
600	XJ 6 , Diversion / F	2009	2015	22	750	132	130	113	RJ19	HB163	ACCIAIO / steel
600	XJ 6	2013	2015	22	750	132	130	113	RJ22	HB163	ACCIAIO / steel
650	XJ 650	1980	1985	22	750	132	130	113	4K0	HB175	ALLUMINIO / aluminium
650	XJ 650	1980	1985	22	755	134	146	102	4K0	HB152	ALLUMINIO / aluminium

ACCOSSATO

STREET RACING

INDICE ANALITICO MANUBRI / handlebars index

CC	MODELLO Model	ANNI / years DA From	A To	Ø	QUOTE / Dimensions A	B	C	D	TELAIO Chassis	CODICE Reference	MATERIALE Raw material
650	XJ 650	1980	1985	22	855	101	175	91	4K0	HB174	ALLUMINIO / aluminium
650	XJ 650	1980	1985	22	820	87	145	75	4K0	HB167	ALLUMINIO / aluminium
650	XJ 650	1980	1985	22	755	134	146	102	4K0	HB150	ACCIAIO / steel
650	XJ 650	1980	1985	22	755	134	146	102	4K0	HB151	ACCIAIO / steel
650	XJ 650	1980	1985	22	750	132	130	113	4K0	HB162	ACCIAIO / steel
650	XJ 650	1980	1985	22	750	132	130	113	4K0	HB163	ACCIAIO / steel
660	MT-03 (660)	2006	2010	22	750	132	130	113	RM02	HB175	ALLUMINIO / aluminium
660	MT-03	2006	2012	22	755	134	146	102	RM02	HB152	ALLUMINIO / aluminium
660	MT-03 (660)	2006	2012	22	855	101	175	91	RM02	HB174	ALLUMINIO / aluminium
660	MT-03	2006	2012	22	820	87	145	75	RM02	HB167	ALLUMINIO / aluminium
660	MT-03	2006	2012	22	755	134	146	102	RM02	HB150	ACCIAIO / steel
660	MT-03	2006	2012	22	755	134	146	102	RM02	HB151	ACCIAIO / steel
660	MT-03 (660)	2006	2010	22	750	132	130	113	RM02	HB162	ACCIAIO / steel
660	MT-03 (660)	2006	2010	22	750	132	130	113	RM02	HB163	ACCIAIO / steel
700	MT-07	2014	2017	22	750	132	130	113	RM04	HB175	ALLUMINIO / aluminium
700	YFM 700 R	2007	2013	22	750	132	130	113	Y7	HB175	ALLUMINIO / aluminium
700	MT-07	2014	2017	22	855	101	175	91	RM04	HB174	ALLUMINIO / aluminium
700	MT-07	2014	2017	22	750	132	130	113	RM04	HB162	ACCIAIO / steel
700	YFM 700 R	2007	2013	22	750	132	130	113	Y7	HB162	ACCIAIO / steel
700	MT-07	2014	2017	22	750	132	130	113	RM04	HB163	ACCIAIO / steel
700	YFM 700 R	2007	2013	22	750	132	130	113	Y7	HB163	ACCIAIO / steel
800	FZ-8 , ABS	2011	2015	22	750	132	130	113	RN25	HB175	ALLUMINIO / aluminium
800	FZ-8 , ABS	2011	2015	22	855	101	175	91	RN25	HB174	ALLUMINIO / aluminium
800	FZ-8 , ABS	2011	2015	22	750	132	130	113	RN25	HB162	ACCIAIO / steel
800	FZ-8 , ABS	2011	2015	22	750	132	130	113	RN25	HB163	ACCIAIO / steel
850	TDM 850	1991	1995	22	750	132	130	113	3 VD	HB175	ALLUMINIO / aluminium
850	TDM 850	1996	2001	22	750	132	130	113	4CM	HB175	ALLUMINIO / aluminium
850	TDM 850	1996	2001	22	750	132	130	113	4TX	HB175	ALLUMINIO / aluminium
850	TDM 850	1994	1995	22	755	134	146	102	3VD	HB152	ALLUMINIO / aluminium
850	TDM 850	1996	1999	22	755	134	146	102	4TX	HB152	ALLUMINIO / aluminium
850	TDM 850	1991	1995	22	855	101	175	91	3 VD	HB174	ALLUMINIO / aluminium
850	TDM 850	1996	1999	22	855	101	175	91	4TX	HB174	ALLUMINIO / aluminium
850	TDM 850	1994	1995	22	820	87	145	75	3VD	HB167	ALLUMINIO / aluminium
850	TDM 850	1996	1999	22	820	87	145	75	4TX	HB167	ALLUMINIO / aluminium
850	TDM 850	1994	1995	22	755	134	146	102	3VD	HB150	ACCIAIO / steel
850	TDM 850	1996	1999	22	755	134	146	102	4TX	HB150	ACCIAIO / steel
850	TDM 850	1994	1995	22	755	134	146	102	3VD	HB151	ACCIAIO / steel
850	TDM 850	1996	1999	22	755	134	146	102	4TX	HB151	ACCIAIO / steel
850	TDM 850	1991	1995	22	750	132	130	113	3 VD	HB162	ACCIAIO / steel
850	TDM 850	1996	2001	22	750	132	130	113	4TX	HB162	ACCIAIO / steel
850	TDM 850	1991	1995	22	750	132	130	113	3 VD	HB163	ACCIAIO / steel
850	TDM 850	1996	2001	22	750	132	130	113	4TX	HB163	ACCIAIO / steel
900	TDM 900	2002	2005	22	750	132	130	113	RN08	HB175	ALLUMINIO / aluminium
900	TDM 900	2006	2010	22	750	132	130	113	RN11	HB175	ALLUMINIO / aluminium
900	TDM 900	2007	2010	22	750	132	130	113	RN18	HB175	ALLUMINIO / aluminium
900	XJ 900	1983	1985	22	750	132	130	113	31A	HB175	ALLUMINIO / aluminium
900	XJ 900 N	1983	1985	22	750	132	130	113	58L	HB175	ALLUMINIO / aluminium
900	XJ 900 F	1985	1993	22	750	132	130	113	4BB	HB175	ALLUMINIO / aluminium
900	XJ 900 S Diversion	1995	2001	22	750	132	130	113	4KM	HB175	ALLUMINIO / aluminium
900	TDM 900	2002	2005	22	755	134	146	102	RN08	HB152	ALLUMINIO / aluminium
900	TDM 900	2006	2006	22	755	134	146	102	RN11	HB152	ALLUMINIO / aluminium
900	TDM 900	2008	2010	22	755	134	146	102	RN18	HB152	ALLUMINIO / aluminium
900	XJ 900	1983	1985	22	755	134	146	102	31A	HB152	ALLUMINIO / aluminium
900	XJ 900	1983	1985	22	755	134	146	102	58L	HB152	ALLUMINIO / aluminium
900	XJ 900	1983	1985	22	755	134	146	102	4BB	HB152	ALLUMINIO / aluminium
900	XJ 900 S Diversion	1995	2001	22	755	134	146	102	4KM	HB152	ALLUMINIO / aluminium
900	TDM 900	2002	2005	22	855	101	175	91	RN08	HB174	ALLUMINIO / aluminium
900	TDM 900	2006	2006	22	855	101	175	91	RN11	HB174	ALLUMINIO / aluminium
900	TDM 900	2007	2010	22	855	101	175	91	RN18	HB174	ALLUMINIO / aluminium
900	XJ 900	1983	1985	22	855	101	175	91	31A	HB174	ALLUMINIO / aluminium
900	XJ 900 N / F	1983	1985	22	855	101	175	91	58L	HB174	ALLUMINIO / aluminium

STREET RACING

INDICE ANALITICO MANUBRI / handlebars index

CC	MODELLO Model	ANNI / years DA From	A To	Ø	QUOTE / Dimensions A	B	C	D	TELAIO Chassis	CODICE Reference	MATERIALE Raw material
900	XJ 900 F	1985	1993	22	855	101	175	91	4BB	HB174	ALLUMINIO / aluminium
900	XJ 900 S Diversion	1995	2001	22	855	101	175	91	4KM	HB174	ALLUMINIO / aluminium
900	TDM 900	2002	2005	22	820	87	145	75	RN08	HB167	ALLUMINIO / aluminium
900	TDM 900	2006	2006	22	820	87	145	75	RN11	HB167	ALLUMINIO / aluminium
900	TDM 900	2008	2010	22	820	87	145	75	RN18	HB167	ALLUMINIO / aluminium
900	XJ 900	1983	1985	22	820	87	145	75	31A	HB167	ALLUMINIO / aluminium
900	XJ 900	1983	1985	22	820	87	145	75	58L	HB167	ALLUMINIO / aluminium
900	XJ 900	1983	1985	22	820	87	145	75	4BB	HB167	ALLUMINIO / aluminium
900	XJ 900 S Diversion	1995	2001	22	820	87	145	75	4KM	HB167	ALLUMINIO / aluminium
900	TDM 900	2002	2005	22	755	134	146	102	RN08	HB150	ACCIAIO / steel
900	TDM 900	2006	2006	22	755	134	146	102	RN11	HB150	ACCIAIO / steel
900	TDM 900	2008	2010	22	755	134	146	102	RN18	HB150	ACCIAIO / steel
900	XJ 900	1983	1985	22	755	134	146	102	31A	HB150	ACCIAIO / steel
900	XJ 900	1983	1985	22	755	134	146	102	58L	HB150	ACCIAIO / steel
900	XJ 900	1983	1985	22	755	134	146	102	4BB	HB150	ACCIAIO / steel
900	XJ 900 S Diversion	1995	2001	22	755	134	146	102	4KM	HB150	ACCIAIO / steel
900	TDM 900	2002	2005	22	755	134	146	102	RN08	HB151	ACCIAIO / steel
900	TDM 900	2006	2006	22	755	134	146	102	RN11	HB151	ACCIAIO / steel
900	TDM 900	2008	2010	22	755	134	146	102	RN18	HB151	ACCIAIO / steel
900	XJ 900	1983	1985	22	755	134	146	102	31A	HB151	ACCIAIO / steel
900	XJ 900	1983	1985	22	755	134	146	102	58L	HB151	ACCIAIO / steel
900	XJ 900	1983	1985	22	755	134	146	102	4BB	HB151	ACCIAIO / steel
900	XJ 900 S Diversion	1995	2001	22	755	134	146	102	4KM	HB151	ACCIAIO / steel
900	TDM 900	2002	2005	22	750	132	130	113	RN08	HB162	ACCIAIO / steel
900	TDM 900	2006	2010	22	750	132	130	113	RN11	HB162	ACCIAIO / steel
900	TDM 900	2007	2010	22	750	132	130	113	RN18	HB162	ACCIAIO / steel
900	XJ 900	1983	1985	22	750	132	130	113	31A	HB162	ACCIAIO / steel
900	XJ 900 N / F	1983	1985	22	750	132	130	113	58L	HB162	ACCIAIO / steel
900	XJ 900 F	1985	1993	22	750	132	130	113	4BB	HB162	ACCIAIO / steel
900	XJ 900 S Diversion	1995	2001	22	750	132	130	113	4KM	HB162	ACCIAIO / steel
900	TDM 900	2002	2005	22	750	132	130	113	RN08	HB163	ACCIAIO / steel
900	TDM 900	2006	2010	22	750	132	130	113	RN11	HB163	ACCIAIO / steel
900	TDM 900	2007	2010	22	750	132	130	113	RN18	HB163	ACCIAIO / steel
900	XJ 900	1983	1985	22	750	132	130	113	31A	HB163	ACCIAIO / steel
900	XJ 900 N / F	1983	1985	22	750	132	130	113	58L	HB163	ACCIAIO / steel
900	XJ 900 F	1985	1993	22	750	132	130	113	4BB	HB163	ACCIAIO / steel
900	XJ 900 S Diversion	1995	2001	22	750	132	130	113	4KM	HB163	ACCIAIO / steel
1000	FZS 1000 Fazer	2001	2005	22	750	132	130	113	RN 06	HB175	ALLUMINIO / aluminium
1000	FZS 1000 Fazer	2004	2005	22	750	132	130	113	RN14	HB175	ALLUMINIO / aluminium
1000	FZ1, FZ1S Fazer	2006	2012	22	750	132	130	113	RN16	HB175	ALLUMINIO / aluminium
1000	FZS 1000 Fazer	2001	2005	22	755	134	146	102	RN06	HB152	ALLUMINIO / aluminium
1000	FZS 1000 Fazer	2001	2005	22	755	134	146	102	RN14	HB152	ALLUMINIO / aluminium
1000	FZ 1 / Fazer	2007	2009	22	755	134	146	102	RN16	HB152	ALLUMINIO / aluminium
1000	FZS 1000 Fazer	2001	2005	22	855	101	175	91	RN 06	HB174	ALLUMINIO / aluminium
1000	FZS 1000 Fazer	2001	2005	22	855	101	175	91	RN14	HB174	ALLUMINIO / aluminium
1000	FZ1, FZ1S Fazer	2006	2012	22	855	101	175	91	RN16	HB174	ALLUMINIO / aluminium
1000	FZS 1000 Fazer	2001	2005	22	820	87	145	75	RN06	HB167	ALLUMINIO / aluminium
1000	FZS 1000 Fazer	2001	2005	22	820	87	145	75	RN14	HB167	ALLUMINIO / aluminium
1000	FZ 1 / Fazer	2007	2009	22	820	87	145	75	RN16	HB167	ALLUMINIO / aluminium
1000	FZS 1000 Fazer	2001	2005	22	755	134	146	102	RN06	HB150	ACCIAIO / steel
1000	FZS 1000 Fazer	2001	2005	22	755	134	146	102	RN14	HB150	ACCIAIO / steel
1000	FZ 1 / Fazer	2007	2009	22	755	134	146	102	RN16	HB150	ACCIAIO / steel
1000	FZS 1000 Fazer	2001	2005	22	755	134	146	102	RN06	HB151	ACCIAIO / steel
1000	FZS 1000 Fazer	2001	2005	22	755	134	146	102	RN14	HB151	ACCIAIO / steel
1000	FZ 1 / Fazer	2007	2009	22	755	134	146	102	RN16	HB151	ACCIAIO / steel
1000	FZS 1000 Fazer	2001	2005	22	750	132	130	113	RN 06	HB162	ACCIAIO / steel
1000	FZS 1000 Fazer	2004	2005	22	750	132	130	113	RN14	HB162	ACCIAIO / steel
1000	FZ1, FZ1S Fazer	2006	2012	22	750	132	130	113	RN16	HB162	ACCIAIO / steel
1000	FZS 1000 Fazer	2001	2005	22	750	132	130	113	RN 06	HB163	ACCIAIO / steel
1000	FZS 1000 Fazer	2004	2005	22	750	132	130	113	RN14	HB163	ACCIAIO / steel
1000	FZ1, FZ1S Fazer	2006	2012	22	750	132	130	113	RN16	HB163	ACCIAIO / steel
1100	BT 1100 Bulldog	2002	2006	22	750	132	130	113	RP05	HB175	ALLUMINIO / aluminium
1100	BT 1100 Bulldog	2002	2006	22	755	134	146	102	RP05	HB152	ALLUMINIO / aluminium

ACCOSSATO

STREET RACING

INDICE ANALITICO MANUBRI / handlebars index

CC	MODELLO Model	ANNI / years DA From	A To	Ø	QUOTE / Dimensions A	B	C	D	TELAIO Chassis	CODICE Reference	MATERIALE Raw material
1100	BT 1100 Bulldog	2002	2006	22	855	101	175	91	RP05	HB174	ALLUMINIO / aluminium
1100	BT 1100 Bulldog	2002	2006	22	820	87	145	75	RP05	HB167	ALLUMINIO / aluminium
1100	BT 1100 Bulldog	2002	2006	22	755	134	146	102	RP05	HB150	ACCIAIO / steel
1100	BT 1100 Bulldog	2002	2006	22	755	134	146	102	RP05	HB151	ACCIAIO / steel
1100	BT 1100 Bulldog	2002	2006	22	750	132	130	113	RP05	HB162	ACCIAIO / steel
1100	BT 1100 Bulldog	2002	2006	22	750	132	130	113	RP05	HB163	ACCIAIO / steel
1200	VMX 1200	1986	1997	22	750	132	130	113	2EN	HB175	ALLUMINIO / aluminium
1200	VMX 1200	1995	2004	22	750	132	130	113	2LT	HB175	ALLUMINIO / aluminium
1200	XJR 1200 / SP	1995	1997	22	750	132	130	113	4PU	HB175	ALLUMINIO / aluminium
1200	XJR 1200	1995	1997	22	755	134	146	102	4PU	HB152	ALLUMINIO / aluminium
1200	VMX 1200	1986	1997	22	855	101	175	91	2EN	HB174	ALLUMINIO / aluminium
1200	VMX 1200	1995	2004	22	855	101	175	91	2LT	HB174	ALLUMINIO / aluminium
1200	XJR 1200 / SP	1995	1997	22	855	101	175	91	4PU	HB174	ALLUMINIO / aluminium
1200	XJR 1200	1995	1997	22	820	87	145	75	4PU	HB167	ALLUMINIO / aluminium
1200	XJR 1200	1995	1997	22	755	134	146	102	4PU	HB150	ACCIAIO / steel
1200	XJR 1200	1995	1997	22	755	134	146	102	4PU	HB151	ACCIAIO / steel
1200	VMX 1200	1986	1997	22	750	132	130	113	2EN	HB162	ACCIAIO / steel
1200	VMX 1200	1995	2004	22	750	132	130	113	2LT	HB162	ACCIAIO / steel
1200	XJR 1200 / SP	1995	1997	22	750	132	130	113	4PU	HB162	ACCIAIO / steel
1200	VMX 1200	1986	1997	22	750	132	130	113	2EN	HB163	ACCIAIO / steel
1200	VMX 1200	1995	2004	22	750	132	130	113	2LT	HB163	ACCIAIO / steel
1200	XJR 1200 / SP	1995	1997	22	750	132	130	113	4PU	HB163	ACCIAIO / steel
1300	XJR 1300	1999	2001	22	750	132	130	113	RP02	HB175	ALLUMINIO / aluminium
1300	XJR 1300	2002	2003	22	750	132	130	113	RP06	HB175	ALLUMINIO / aluminium
1300	XJR 1300	2004	2006	22	750	132	130	113	RP10	HB175	ALLUMINIO / aluminium
1300	XJR 1300	2007	2016	22	750	132	130	113	RP19	HB175	ALLUMINIO / aluminium
1300	XJR 1300	1999	2001	22	755	134	146	102	RP02	HB152	ALLUMINIO / aluminium
1300	XJR 1300	2002	2003	22	755	134	146	102	RP06	HB152	ALLUMINIO / aluminium
1300	XJR 1300	2004	2006	22	755	134	146	102	RP10	HB152	ALLUMINIO / aluminium
1300	XJR 1300	2007	2016	22	755	134	146	102	RP19	HB152	ALLUMINIO / aluminium
1300	XJR 1300	1999	2001	22	855	101	175	91	RP02	HB174	ALLUMINIO / aluminium
1300	XJR 1300	2002	2003	22	855	101	175	91	RP06	HB174	ALLUMINIO / aluminium
1300	XJR 1300	2004	2006	22	855	101	175	91	RP10	HB174	ALLUMINIO / aluminium
1300	XJR 1300	2007	2013	22	855	101	175	91	RP19	HB174	ALLUMINIO / aluminium
1300	XJR 1300	1999	2001	22	820	87	145	75	RP02	HB167	ALLUMINIO / aluminium
1300	XJR 1300	2002	2003	22	820	87	145	75	RP06	HB167	ALLUMINIO / aluminium
1300	XJR 1300	2004	2006	22	820	87	145	75	RP10	HB167	ALLUMINIO / aluminium
1300	XJR 1300	2007	2016	22	820	87	145	75	RP19	HB167	ALLUMINIO / aluminium
1300	XJR 1300	1999	2001	22	755	134	146	102	RP02	HB150	ACCIAIO / steel
1300	XJR 1300	2002	2003	22	755	134	146	102	RP06	HB150	ACCIAIO / steel
1300	XJR 1300	2004	2006	22	755	134	146	102	RP10	HB150	ACCIAIO / steel
1300	XJR 1300	2007	2016	22	755	134	146	102	RP19	HB150	ACCIAIO / steel
1300	XJR 1300	1999	2001	22	755	134	146	102	RP02	HB151	ACCIAIO / steel
1300	XJR 1300	2002	2003	22	755	134	146	102	RP06	HB151	ACCIAIO / steel
1300	XJR 1300	2004	2006	22	755	134	146	102	RP10	HB151	ACCIAIO / steel
1300	XJR 1300	2007	2016	22	755	134	146	102	RP19	HB151	ACCIAIO / steel
1300	XJR 1300	1999	2001	22	750	132	130	113	RP02	HB162	ACCIAIO / steel
1300	XJR 1300	2002	2003	22	750	132	130	113	RP06	HB162	ACCIAIO / steel
1300	XJR 1300	2004	2006	22	750	132	130	113	RP10	HB162	ACCIAIO / steel
1300	XJR 1300	2007	2016	22	750	132	130	113	RP19	HB162	ACCIAIO / steel
1300	XJR 1300	1999	2001	22	750	132	130	113	RP02	HB163	ACCIAIO / steel
1300	XJR 1300	2002	2003	22	750	132	130	113	RP06	HB163	ACCIAIO / steel
1300	XJR 1300	2004	2006	22	750	132	130	113	RP10	HB163	ACCIAIO / steel
1300	XJR 1300	2007	2016	22	750	132	130	113	RP19	HB163	ACCIAIO / steel
1700	MT-01	2005	2006	22	755	134	146	102	RP12	HB152	ALLUMINIO / aluminium
1700	MT-01	2007	2009	22	755	134	146	102	RP18	HB152	ALLUMINIO / aluminium
1700	MT-01	2005	2006	22	820	87	145	75	RP12	HB167	ALLUMINIO / aluminium
1700	MT-01	2007	2009	22	820	87	145	75	RP18	HB167	ALLUMINIO / aluminium
1700	MT-01	2005	2006	22	755	134	146	102	RP12	HB150	ACCIAIO / steel
1700	MT-01	2007	2009	22	755	134	146	102	RP18	HB150	ACCIAIO / steel
1700	MT-01	2005	2006	22	755	134	146	102	RP12	HB151	ACCIAIO / steel
1700	MT-01	2007	2009	22	755	134	146	102	RP18	HB151	ACCIAIO / steel

SCHEDE MANUBRI
handlebars data sheets

MANUBRI IN ACCIAIO Ø 22mm
Ø 22mm steel handlebars: **165 - 178**

SEZIONE MANUBRI CROMATI Ø 22mm
Ø 22mm-chromed handlabar section: **168 - 174 & 178**

MANUBRI IN ALLUMINIO Ø 22mm
Ø 22mm aluminium handlebars: **179 - 191**

MANUBRI IN ALLUMINIO Ø 28mm
Ø 28mm aluminium handlebars: **192**

ACCESSORI MANUBRI
handlebar accessories: **193 - 195**

ACCOSSATO

MANUBRI IN ACCIAIO Ø 22mm / Ø 22mm steel handlebars



CODICE Reference	COLORE Colour	CARATTERISTICHE TECNICHE Technical details	
HB150	CROMATO / chromed	Ø	22 mm / 7/8''
		A	755 mm
		B	134 mm
HB151	VERNICIATO NERO black polished	C	146 mm
		D	102 mm
		MATERIALE raw material	ACCIAIO steel

ACCESSORI / accessories

CODICE Reference	DESCRIZIONE Description
TK001	CONTRAPPESI PER MANUBRIO handlebar ends
TK002	
TK004	

APPLICAZIONI / application list - HB150 & HB151

CC	MODELLO Model	ANNI / years DA From	ANNI / years A To	TELAIO chassis
	APRILIA			
650	Moto 6.5	1995	1999	MH00
650	PEGASO 650	1997	2000	ML
650	PEGASO 650 I.E.	2001	2004	RW
660	PEGASO 650 STRADA	2005	2009	VD
750	SL 750 SHIVER / GT	2007	2016	RA
750	SMV 750 DORSODURO	2008	2016	SM
850	NA 850 MANA / GT	2007	2016	RC
1000	ETV 1000 CAPO NORD	2001	2007	PS
1000	RSV 1000 TUONO	2002	2005	RP
1000	TUONO 1000 R / FACTORY	2006	2009	RR
	BENELLI			
900	TNT 899S	2008	2009	TN
900	TREK 899	2009	2011	TK
1130	TNT 1130 / SPORT EVO / TITANIUM	2005	2007	TN
1130	TREK 1130 / AMAZONAS	2007	2008	TK
	BIMOTA			
1100	DB6 DELIRIO	2011	2013	DB06
	BMW			
100	R 100 CS	1980	1984	BMW247
650	F 650 / ST	1996	2000	BMW169
650	F 650 CS	2000	2005	E650C
650	F 650 CS	2000	2005	K14
650	F 650 GS / PD	1999	2007	E650G
650	F 650 GS / PD	1999	2007	R13
800	F 800 GS	2006	2012	E8GS

STREET RACING

ACCOSSATO

MANUBRI IN ACCIAIO Ø 22mm / Ø 22mm steel handlebars

CC	MODELLO Model	ANNI / years DA From	A To	TELAIO chassis
850	R 850 R	1994	2002	BMW259
850	R 850 R	1994	2002	R11R
850	R 850 R	1994	2002	R21
1100	R 1100 R	1993	2001	BMW259
1100	R 1100 R	1993	2001	R11R
1150	R 1150 R / ROCKSTER	2002	2005	R21
1150	R 1150 GS / PD	1998	2003	R21
1200	R 1200 R	2005	2010	R1ST
1200	R 1200 GS / PD / ADVENTURE	2002	2007	R12
	BUELL			
984	XB9S LIGHTNING	2003	2004	XB1
1200	S1 LIGHTNING 1200	1999	2002	EB1
1200	XB12S LIGHTNING	2002	2011	XB1
	CAGIVA			
600	CANYON 600	1995	1998	G
900	GRAN CANYON 900 I.E.	1998	2000	M3
	DUCATI			
400	MONSTER 400	2000	2003	M3
400	MONTSER 400 / 400 I.E.	2004	2008	M4
600	MONSTER 600	1993	1998	M
600	MONSTER 600	1999	2001	M3
620	MONSTER 620 / 620 I.E. / DARK	2002	2006	M4
620	MULTISTRADA 620	2006	2006	A1
695	MONSTER 695	2007	2008	M4
700	MONSTER 696	2010	2012	M5
750	MONSTER 750	1996	1999	M1
750	MONSTER 750	2002	2002	M4
800	MONSTER 800 / S2R	2005	2006	M4
900	MONSTER 900	1993	1999	M
900	MONSTER 900	2000	2002	M2
900	MONSTER 900 / S2R 1000 / S4-R / S4Rs	1992	2017	M4
1000	GT 1000 / TOURING	2008	2010	C1
1000	MONSTER 1000	2004	2008	M4
1000	MULTISTRADA 1000 DS	2003	2006	A1
1000	MULTISTRADA 1000 DS	2003	2006	A1
1099	STREETFIGHTER / S	2009	2014	H7
1100	MONSTER 1100 / S	2009	2010	M5
1100	MULTISTRADA 1100	2007	2009	A1
1100	HYPERMOTARD 1100 / S	2008	2012	B1
	HONDA			
125	VARADERO 125	2000	2011	JC32
250	CB 250 TWO FIFTY	1999	2001	MC26
400	CB 400 N	1979	1983	CM400N
500	CB 500	1994	1994	PC26
500	CB 500	1994	1994	PC32
500	CBF 500	2004	2007	PC39
600	CB 600 F HORNET	1998	2006	PC34
600	CB 600 F HORNET	1998	2006	PC34
600	CB 600 F HORNET	1998	2006	PC36
600	CB 600 F HORNET	1998	2006	PC41
600	CBF 600 / S	2007	2012	PC38
600	CBF 600 / S	2007	2012	PC43
600	TRANSALP	1987	1999	RD13
650	FX 650 VIGOR	1999	2002	RD09
650	NTV 650 REVERE	1988	2001	RC33
650	NX 650 DOMINATOR	1988	1989	RD08
650	NT 650 V DEAUVILLE	1998	2001	RC47
650	NT 650 V DEAUVILLE	1998	2001	RC47
650	SLR 650	1999	1999	RD09
650	XL 650 V TRANSALP	2001	2003	RD10
650	XL 650 V TRANSALP	2000	2003	RD11

CC	MODELLO Model	ANNI / years DA From	A To	TELAIO chassis
650	XRV 650 AFRICA TWIN	1988	1990	RD03
750	CB 750 SEVEN FIFTY	2001	2001	RC42
750	XRV 750 AFRICA TWIN	1990	1992	RD04
750	XRV 750 AFRICA TWIN	1993	2003	RD07
900	CB 900 F HORNET	2002	2007	SC48
1000	CB 1000 F	1989	1992	SC30
1000	CB 1000 R	2011	2014	SC60
1000	CBF 1000	2010	2013	SC58
1000	XL 1000 V VARADERO	1999	2002	SD01
1000	XL 1000 V VARADERO	1999	2002	SD02
1100	X-ELEVEN	1999	2001	SC42
1300	CB 1300 / S	2010	2012	SC54
	HYOSUNG			
650	GT 650 NAKED	2005	2016	GT650
	KAWASAKI			
500	ER-5	1997	2005	ER500A
500	ER-5	1997	2005	ER500A
550	ZEPHYR 550	1990	1994	ZR550B
600	ZL 600 ELIMINATOR	1995	1997	ZL600B
650	W 650	1999	2005	EJ650A
650	ER-6N	2006	2008	ER650A
650	ER-6F	2006	2008	EX650A
650	ER-6N	2009	2011	ER650C
650	ER-6F	2009	2011	EX650C
650	VERSYS	2007	2009	LE650A
750	Z 750 / S	2004	2006	ZR750J
750	Z 750	2007	2012	ZR750L
750	ZR-7 / S	1999	2003	ZR750F
750	ZEPHYR 750	1991	1994	ZR750C
1000	KLV 1000	2004	2005	WVBS
1000	Z 1000	2003	2006	ZRT00A
1000	Z 1000	2007	2009	ZRT00B
1100	ZEPHYR 1100	1992	1995	ZRT10A
1100	ZRX 1100	1997	1999	ZRT10C
1100	ZRX 1100	1997	1999	ZRT10C
1200	ZRX 1200 / R / S	2001	2004	ZRT20A
1300	Z 1300	1980	1985	KZT30AG
1300	Z 1300 DFI	1984	1989	KZT00A
	KYMCO			
125	MXER 150	2002	2003	L2
250	KXR 250	2003	2004	L3
	MOTO GUZZI			
750	BREVA 750 I.E.	2003	2007	LL
850	BREVA 850	2006	2008	LP
1200	GRISO 8V	2005	2016	LS
1200	1200 SPORT 4V	2006	2013	LP
	MOTO MORINI			
1200	9 1/2	2007	2008	2
1200	CORSARO / AVIO / VELOCE 1200	2005	2009	1
	MV AGUSTA			
900	BRUTALE 989 R	2008	2008	F4
1078	BRUTALE 1078 RR	1994	2016	F4
	SACHS			
650	ROADSTER 650 V1	2000	2005	830
800	ROADSTER 800 V2	2000	2005	835
	SUZUKI			
125	DR 125	1994	1995	SF44A
350	DR 350	1990	1998	SK42B
400	DR-Z 400 S	2000	2009	WVBC
400	DR-Z 400 SM	2005	2009	WVB8
400	GSF 400 BANDIT	1991	1993	GK75B

ACCOSSATO

STREET RACING

MANUBRI IN ACCIAIO Ø 22mm / Ø 22mm steel handlebars

CC	MODELLO Model	ANNI / years DA From	A To	TELAIO chassis
500	GS 500 E	1989	1996	GM51B
500	GS 500 F	2007	2007	WVBK
600	GSR 600	2006	2010	WVB9
600	GSF 600 BANDIT / S	1995	1998	GN77B
600	GSF 600 BANDIT / S	2000	2004	WVA8
650	GSF 650 BANDIT / S	2005	2006	WVB5
650	GSF 650 BANDIT / S	2007	2008	WVCJ
650	DL 650 V-STROM	2004	2011	WVB1
650	DR 650	1990	1991	SP41B
650	DR 650	1990	1991	SP42B
650	DR 650	1991	1993	SP43B
650	DR 650	1992	1993	SP44B
650	DR 650	1994	1995	SP45B
650	DR 650	1996	1997	SP46B
650	SV 650 N	1999	2002	AV
650	SV 650 N	2003	2010	WVBY
650	SFV 650 GLADIUS	2009	2015	WVCX
650	XF 650 FREEWIND	1997	2001	AC
750	GSX 750	1998	2001	AE
800	DR 800	1991	1993	SR42B
800	DR 800	1991	1993	SR43B
1000	DL 1000 V-STROM	2002	2010	WVBS
1000	SV 1000 N	2003	2007	WVBX
1100	GSX 1100 G	1986	1988	GV74A
1200	GSF 1200 BANDIT / S	1996	2000	GV75A
1200	GSF 1200 BANDIT / S	1996	2000	WVA9
1200	GSF 1200 BANDIT / S	1996	2000	WVCB
1200	GSX 1200	1999	2001	A3
1250	GSF 1250 BANDIT / S	2007	2016	WVCH
1300	B-KING	2008	2010	WVCR
1400	GSX 1400	2002	2005	WVBN
	TRIUMPH			
600	SPEED FOUR	2004	2007	806LB
675	STREET TRIPLE	2007	2011	D67LD
885	THUNDERBIRD SPORT	1995	2014	T309RT
900	BONNEVILLE AMERICA	2001	2014	908M
900	LEGEND TT	1998	2002	T309RT
900	SCRAMBLER	2006	2016	986MG
900	TIGER 900	1993	2014	T400
900	TIGER 900	1993	2014	T709
900	TROPHY 900	1992	2014	T300
900	TROPHY 900	1992	2014	T300E

CC	MODELLO Model	ANNI / years DA From	A To	TELAIO chassis
955	SPEED TRIPLE 955I	1997	2004	595RPT
955	SPEED TRIPLE 955I	1997	2004	595N
955	TIGER 955	2004	2006	709EN
1050	SPEED TRIPLE	1993	2017	T509
1050	SPEED TRIPLE 1050	1993	2017	515NJ
1050	TIGER 1050	2006	2012	115NG
1200	TROPHY 1200	2013	2013	T300
1200	TROPHY 1200	2013	2013	T300E
	YAMAHA			
125	TDR 125	1989	1994	5AN
400	XS 400	1977	1990	2A2
500	SR 500	1978	1999	2J4
500	SR 500	1978	1999	48T
600	FZS 600 FAZER	1998	2003	RJ02
600	FZ 6 / FAZER	2004	2006	RJ07
600	FZ 6 / FAZER / S2	2007	2008	RJ14
600	XJ 6 / DIVERSION	2009	2015	RJ19
600	XJ 600 N / S	1997	2002	4BR
600	XJ 600 N / S	1996	1996	4BRA
650	XJ 650	1980	1985	4K0
660	MT-03	2006	2012	RM02
850	TDM 850	1994	1995	3VD
850	TDM 850	1996	1999	4TX
900	TDM 900	2002	2005	RN08
900	TDM 900	2006	2006	RN11
900	TDM 900	2008	2010	RN18
900	XJ 900	1983	1985	31A
900	XJ 900	1983	1985	58L
900	XJ 900	1983	1985	4BB
900	XJ 900 S DIVERSION	1995	2001	4KM
1000	FZS 1000 FAZER	2001	2005	RN06
1000	FZS 1000 FAZER	2001	2005	RN14
1000	FZ 1 / FAZER	2007	2009	RN16
1100	BT 1100 BULLDOG	2002	2006	RP05
1200	XJR 1200	1995	1997	4PU
1300	XJR 1300	1999	2001	RP02
1300	XJR 1300	2002	2003	RP06
1300	XJR 1300	2004	2006	RP10
1300	XJR 1300	2007	2016	RP19
1700	MT-01	2005	2006	RP12
1700	MT-01	2007	2009	RP18

STREET RACING

MANUBRI IN ACCIAIO Ø 22mm / Ø 22mm steel handlebars



CODICE Reference	COLORE Colour	CARATTERISTICHE TECNICHE Technical details		APPLICAZIONI Application
HB153	CROMATO / chromed	Ø	22 mm / 7/8''	KAWASAKI
		A	700 mm	
		B	0 mm	
		C	185 mm	
		D	87 mm	
		MATERIALE / raw material	ACCIAIO / steel	



CODICE Reference	COLORE Colour	CARATTERISTICHE TECNICHE Technical details		APPLICAZIONI Application
HB154	CROMATO / chromed	Ø	22 mm / 7/8''	TURISMO STANDARD standard tourism
		A	745 mm	
		B	75 mm	
		C	110 mm	
		D	100 mm	
		MATERIALE / raw material	ACCIAIO / steel	



CODICE Reference	COLORE Colour	CARATTERISTICHE TECNICHE Technical details		APPLICAZIONI Application
HB155	CROMATO / chromed	Ø	22 mm / 7/8''	CUSTOM STANDARD
		A	810 mm	
		B	185 mm	
		C	120 mm	
		D	122 mm	
		MATERIALE / raw material	ACCIAIO / steel	

ACCOSSATO

STREET RACING

MANUBRI IN ACCIAIO Ø 22mm / Ø 22mm steel handlebars



CODICE Reference	COLORE Colour	CARATTERISTICHE TECNICHE Technical details	
HB156	S **ARGENTO** / silver	Ø	**22MM** / 7/8''
		A	**750MM**
		B	**132MM**
		C	**130MM**
		D	**113MM**
		MATERIALE / raw material	**ACCIAIO** / steel

APPLICAZIONI / application list - HB156

CC	MODELLO Model	ANNI / years DA From	A To	TELAIO chassis
BMW				
1100	R1100 S	1998	2001	R2S
1100	R1100 S	2001	2004	R2S
1100	R1100 S	2004	2006	R11S
1100	R 1100 S BOXER CUP REPLICA	2003	2004	R2S
1100	R 1100 S BOXER CUP REPLICA	2004	2006	R11S

CC	MODELLO Model	ANNI / years DA From	A To	TELAIO chassis
1150	R1150R	2000	2004	R21
1150	R1150R	2004	2006	R11R
1150	R1150R ROCKSTER	2003	2004	R21
1150	R1150R ROCKSTER	2004	2006	R11R
1200	R1200R	2006	2016	R1ST

STREET RACING

MANUBRI IN ACCIAIO Ø 22mm / Ø 22mm steel handlebars



CODICE Reference	COLORE Colour	CARATTERISTICHE TECNICHE Technical details		APPLICAZIONI Application
HB157	CROMATO / chromed	Ø	22MM / 7/8''	ADATTABILE CUSTOM custom-adaptable
		A	717MM	
		B	191MM	
		C	60MM	
		D	231MM	
		MATERIALE / raw material	ACCIAIO / steel	



CODICE Reference	COLORE Colour	CARATTERISTICHE TECNICHE Technical details		APPLICAZIONI Application
HB158	CROMATO / chromed	Ø	22MM / 7/8''	ADATTABILE CUSTOM custom-adaptable DUCATI 600 MONSTER 1993 - 2001 DUCATI 620 MONSTER 2002 - 2006
		A	746MM	
		B	40MM	
		C	100MM	
		D	110MM	
		MATERIALE / raw material	ACCIAIO / steel	

ACCOSSATO

MANUBRI IN ACCIAIO Ø 22mm / Ø 22mm steel handlebars



CODICE Reference	COLORE Colour	CARATTERISTICHE TECNICHE Technical details		APPLICAZIONI Application
HB159	CROMATO / chromed	Ø	22MM / 7/8''	HONDA 600 HORNET 1998 - 2013
		A	685MM	
		B	124MM	
		C	130MM	
		D	93MM	
		MATERIALE / raw material	ACCIAIO / steel	
		FORI / pierced	NO	

CODICE Reference	COLORE Colour	CARATTERISTICHE TECNICHE Technical details		APPLICAZIONI Application
HB160	CROMATO / chromed	Ø	22MM / 7/8''	HONDA 600 HORNET 2007-2013
		A	675MM	
		B	103MM	
		C	130MM	
		D	95MM	
		MATERIALE / raw material	ACCIAIO / steel	
		FORI / pierced	NO	

CODICE Reference	COLORE Colour	CARATTERISTICHE TECNICHE Technical details		APPLICAZIONI Application
HB161	CROMATO / chromed	Ø	22MM / 7/8''	HONDA 600 HORNET 2007 - 2013
		A	675MM	
		B	93MM	
		C	130MM	
		D	93MM	
		MATERIALE / raw material	ACCIAIO / steel	
		FORI / pierced	NO	

STREET RACING

MANUBRI IN ACCIAIO Ø 22mm / Ø 22mm steel handlebars



CODICE Reference	COLORE Colour	CARATTERISTICHE TECNICHE Technical details	
HB162	CROMATO / chromed	Ø	22MM / 7/8''
		A	750MM
		B	132MM
		C	130MM
		D	113MM
		MATERIALE / raw material	ACCIAIO / steel

ACCESSORI / accessories

CODICE Reference	DESCRIZIONE Description
TK001	CONTRAPPESI PER MANUBRI handlebar ends
TK002	
TK004	

APPLICAZIONI / application list - HB162

CC	MODELLO Model	ANNI / years DA From	ANNI / years A To	TELAIO chassis
	AEON			
180	Cobra 180	2007	2011	AT 18
	APRILIA			
125	Tuono 125	2003	2004	SF
650	Pegaso 650	1992	1996	GA
650	Pegaso 650	1992	1996	MX
650	Pegaso 650	1997	2000	ML
650	Pegaso 650 i.e.	2001	2004	VD
1000	Tuono 1000 V4	2011	2014	TY
	BMW			
800	F 800 ST	2004	2012	E8ST
850	R 850 R	1994	2002	BMW 259
850	R 850 R	1994	2002	R21
1100	R 1100 R	1993	2001	BMW 259
1150	R 1150 R	1999	2006	R21
	BOMBARDIER			
650	DS 650, Baja X	2007	2013	B
	DUCATI			
400	Monster 400	2000	2003	M3
600	Monster 600	1993	1998	M
600	Monster 600 / Dark	1998	1998	M3
620	Monster 620 / Dark	2005	2006	M4
695	Monster 695	2007	2008	M4
696	Monster 696	2010	2014	M5
750	Monster 750 / Dark	1999	1999	M
750	Monster 750 i.e.	2002	2002	M4
800	Hypermotard 796	2010	2012	B1
800	Monster 800 i.e. S,Dark	2005	2007	M4
800	Monster 800 S2R, Dark	2005	2007	M4
900	Monster 900	2001	2002	M2
900	Monster 900	1993	1999	M
900	Monster 900 i.e. ,Dark	1999	1999	M4
900	Monster 916 S4	2001	2003	M4
1000	Monster 1000 Dark	2003	2005	M4
1000	Monster 1000 i.e.	2003	2005	M4
1000	Monster 1000 S	2005	2005	M4
1000	Monster 1000 S2R	2006	2008	M4
	GAS GAS			
50	Wild HP 50	2004	2004	Wild HP 50
300	Wild HP 300	2005	2003	Wild HP 300
450	Wild HP 450	2004	2007	Wild HP 450
	HONDA			
125	CBF 125	2009	2016	JC 40
125	XL 125 Varadero	2001	2009	JC 32
250	CB 250 Two fifty	1999	2001	MC 26
400	CB 400 N	1979	1983	CM400N
500	CB 500	1994	1994	PC 26
500	CB 500	1994	1994	PC 32
500	CBF 500	2004	2007	PC 39
600	CB 600 Hornet	2001	2001	PC 34
600	CB 600 Hornet	2001	2001	PC 36
600	CB 600 Hornet	2001	2001	PC 41
600	CBF 600	2004	2005	PC 38
600	CBF 600	2009	2009	PC 43

ACCOSSATO

STREET RACING

MANUBRI IN ACCIAIO Ø 22mm / Ø 22mm steel handlebars

CC	MODELLO Model	ANNI / years DA From	A To	TELAIO chassis
600	XL 600 R	1983	1987	PD 03
600	XL 600 R	1983	1987	PD 03
650	CB 650 F	2014	2016	RC 75
650	NT 650 Deauville	1998	2005	RC 47
650	NTV 650	1988	1995	RC 33
650	NX 650 Dominator	1988	1989	RD 02
650	NX 650 Dominator	1988	1989	RD 08
650	SLR 650	1999	1999	RD 09
650	XL 650 V Transalp	2001	2003	RD 10
650	XL 650 V Transalp	2000	2003	RD 11
700	NT 700 V Deauville	2006	2016	RC 52
700	NT 700 V Deauville	2006	2015	RC 59
750	CB 750 seven fifty	2001	2001	RC 42
750	XRV 750 Africa Twin	1990	1992	RD 04
750	XRV 750 Africa Twin	1993	2003	RD 07
900	CB 900 Hornet	2002	2007	SC 48
1000	CB 1000 Big One	1993	1996	SC 30
1000	CB 1000 R	2011	2014	SC 60
1000	CBF 1000 F	2006	2016	SC 58
1000	CBF 1000 F	2006	2016	SC 64
1000	GL 1000	1980	1980	GL1
1000	XL 1000 Varadero	2001	2002	SD 01
1000	XL 1000 Varadero	2003	2011	SD 02
1100	CB 1100 X-11	2001	2001	SC 42
1300	CB 1300	2003	2009	SC 40
1300	CB 1300	2003	2009	SC 54
1300	CB 1300 X-4	1997	2003	SC 38
	HYOSUNG			
125	125 Karion	2007	2011	RTT
125	GT 125 naked	2015	2017	GT
250	GT 250 naked	2001	2016	GT
650	GT 650 naked	2005	2016	GT 650
	KAWASAKI			
50	KFX 50	2003	2006	KFX 50
250	KFX 250	2004	2016	KFX 250
300	KLF 300 Bayou, C	1997	2001	LF 300 B
400	KLF 400 Bayou	1996	1999	LF 400 B
500	ER-5, Twister	1997	2000	ER 500 A
500	ER-5, Twister	2001	2005	ER500A(C)
550	ZR 550 Zephyr	1991	1995	ZR550B
600	ZL 600 Eliminator	1995	1997	ZL600B
650	ER-6f	2006	2008	EX650A
650	ER-6f	2009	2011	EX650C
650	ER-6f	2012	2016	EX650E
650	ER-6n	2006	2008	ER650A
650	ER-6n	2009	2011	ER650C
650	ER-6n	2012	2016	ER650E
650	Versys 650	2007	2009	LE650A
650	Versys 650	2010	2010	LE650C
650	W 650	1999	2005	EJ650A
650	Z 650	2017	2017	KZ 650 B
650	Z 650	2017	2017	KZ 650 D
700	KFX 700	2006	2011	K7SV60
700	KSV 700 V-Force	2004	2008	KSV 700
700	KVF 700 Prairie	2004	2004	KVF 700
750	Z 750	2004	2006	ZR750J
750	Z 750 S	2004	2006	ZR750J
750	Z 750	2011	2012	ZR750L (L,M)
750	Z 750	2011	2012	ZR750N (N,P)
750	Z 750 R	2011	2012	ZR750N
750	ZR 750 Zephyr	1991	1996	ZR 750C
750	ZR-7	1999	2003	ZR750F
750	ZR-7 S	2001	2003	ZR750F
800	Z 800	2013	2016	ZR 800 A (A, B)
800	Z 800 e	2013	2016	ZR 800 C (C.,D.)
1000	KLV 1000	2004	2005	WVBS
1000	Z 1000	2003	2006	ZRT00A
1000	Z 1000, ABS	2007	2009	ZRT00B
1100	ZR 1100 Zephyr	1992	1995	ZRT10A
1100	ZRX 1100 R, S	1993	1999	ZRT10C
1200	ZRX 1200 R, S	2001	2003	ZRT20A
	KTM			
620	620 DUKE	1994	1997	---
640	640 DUKE II	1996	2006	KTM DK II
	KYMCO			
150	MXER 150	2004	2004	L2
250	KXR 250	2003	2004	L3
	MZ			
125	RT 125	2000	2002	RT 125
	POLARIS			
50	Predator 50	2014	2015	Predator 50
90	Predator 90	2003	2005	Predator 90
250	Trail Blazer 250	2005	2016	Trail Blazer 250 E
330	Trail Boss 330	2007	2013	Trail Boss 330 E
499	Predator 501	2007	2012	Predator 500 E
500	Predator 500	2007	2012	Predator 500 E
500	Scrambler 500	2007	2012	Scrambler 500 E
	SUZUKI			
125	DR 125	2016	2017	SF43B
125	DR 125	1994	1995	SF44A
125	DR 125 SM	2009	2010	CS
250	LTZ 250	2009	2010	AJ 4A A
400	DR-Z 400 SM	2005	2009	WVBC
400	LTA 400	2008	2011	LTA 400
400	LTF 400	2008	2012	LTF 400
400	LTZ 400	2004	2012	S4/AK/47
500	GS 500	1989	1996	GM51B
500	GS 500	1989	1996	GM51A
500	GS 500	2001	2002	BK
500	LTA 500 King Quad	2004	2012	TS 50
600	DR 600	1985	1989	SN41A
600	GSF 600 Bandit	1995	1998	GN77B
600	GSF 600 Bandit	2000	2004	WVA8
600	GSR 600	2006	2010	WVB9
650	GSF 650 Bandit	2005	2006	WVB5
650	GSF 650 Bandit, S	2007	2008	WVCJ
650	GSF 650 Bandit, S	2009	2012	WVCZ
650	GSX 650 F	2005	2012	WVCJ
650	DL 650 V-Strom	2004	2011	WVB1
650	DR 650	1990	1991	SP41B
650	DR 650	1990	1991	SP42B
650	DR 650	1991	1993	SP43B
650	DR 650	1992	1993	SP44B
650	DR 650	1994	1995	SP45B
650	DR 650	1996	1997	SP46B
650	SV 650 N	1999	2002	AV
650	SV 650 N	2003	2010	WVBY
650	SFV 650 Gladius	2009	2015	WVCX
650	XF 650 Freewind	1997	2001	AC
700	LTA 700 X	2006	2007	AP 41 A
700	LTA 700 King Quad	2006	2007	S7/AP/41
750	GSR 750	2011	2016	C5

STREET RACING

MANUBRI IN ACCIAIO Ø 22mm / Ø 22mm steel handlebars

CC	MODELLO Model	ANNI / years DA From	A To	TELAIO chassis
750	GSX 750	1998	2001	AE
800	DR 800	1991	1993	SR42B
800	DR 800	1991	1993	SR43B
1000	DL 1000 V-Strom	2002	2010	WVBS
1000	SV 1000 N	2003	2007	WVBX
1100	GSX 1100 G	1986	1988	GV74A
1200	GSF 1200 N, S	1996	2000	GV 75A
1200	GSF 1200 N, S	2001	2005	WVA9
1200	GSF 1200 N, S	2006	2006	WVCB
1200	GSX 1200	1999	2001	A3
1250	GSF 1250 N, S	2007	2016	WVCH
1250	GSX 1250 F	2010	2016	WVCH
1400	GSX 1400	2002		WVBN
	TRIUMPH			
675	Street Triple 675	2007	2014	D67LD
800	Bonneville 800	2001	2014	908MD
800	Scrambler 800	2006	2014	986MG
885	Thunderbird Sport	1995	2014	T309RT
900	Bonneville 900	2001	2014	986MF
900	Speed Triple 900	1994	2014	T 509
900	Tiger 900	1993	2014	T400
900	Tiger 900	1993	2014	T709
900	Trophy 900	1992	2014	T300
900	Thruxton 900	2005	2014	986ME
955	Speed Triple 955	2002	2005	T 595
955	Tiger 955	2004	2006	709EN
1050	Speed Triple 1050	1993	2017	515NJ
1050	Tiger 1050	2006	2012	115NG
1200	Trophy 1200	2013	2013	T300
1200	Trophy 1200	2013	2013	T300E
	YAMAHA			
125	DT 125 R	1999	2000	3RM
125	DT 125 R	1989	1997	4BL-DE03
125	DT 125 RE, X	2004	2006	DE06
125	TW 125	2003	2003	DE01
125	TW 125	2003	2003	DE05
125	WR 125 R, X	2009	2011	DE07
125	XT 125 R, X	2009	2014	74
125	YBR 125	2005	2005	RE04
125	YBR 125	2010	2014	RE05
250	XG 250 Tricker	2005	2005	---

CC	MODELLO Model	ANNI / years DA From	A To	TELAIO chassis
250	YFM 250 Bruin	2006	2005	YFM 250
350	YFM 350 R	2007	2013	Y3
400	XS 400	1977	1990	2A2
400	XS 400	1977	1990	12F, 12E
450	YFZ 450	2007	2013	Y45
500	SR 500	1978	1999	2J4, 2J2
500	SR 500	1978	1999	48T
500	SR 500	1978	1999	1RU, 3EB
600	FZS 600 Fazer	1998	2003	RJ02
600	FZ 6, FZ 6S Fazer	2004	2006	RJ07
600	FZ 6, FZ 6S Fazer	2007	2008	RJ14
600	XJ 600 N, S	1992	2002	4BR
600	XJ 600 N, S	1992	2002	4LX
600	XJ 600 N,S	1992	2002	RJ01
600	XJ 6 , Diversion / F	2009	2015	RJ19
600	XJ 6	2013	2015	RJ22
650	XJ 650	1980	1985	4K0
660	MT-03	2006	2010	RM02
700	MT-07	2014	2017	RM04
700	YFM 700 R	2007	2013	Y7
800	FZ-8 , ABS	2011	2015	RN25
850	TDM 850	1991	1995	3 VD
850	TDM 850	1996	2001	4TX
900	TDM 900	2002	2005	RN08
900	TDM 900	2006	2010	RN11
900	TDM 900	2007	2010	RN18
900	XJ 900	1983	1985	31A
900	XJ 900 N / F	1983	1985	58L
900	XJ 900 F	1985	1993	4BB
900	XJ 900 S Diversion	1995	2001	4KM
1000	FZS 1000 Fazer	2001	2005	RN 06
1000	FZS 1000 Fazer	2004	2005	RN14
1000	FZ1, FZ1S Fazer	2006	2012	RN16
1100	BT 1100 Bulldog	2002	2006	RP05
1200	VMX 1200	1986	1997	2EN
1200	VMX 1200	1995	2004	2LT
1200	XJR 1200 / SP	1995	1997	4PU
1300	XJR 1300	1999	2001	RP02
1300	XJR 1300	2002	2003	RP06
1300	XJR 1300	2004	2006	RP10
1300	XJR 1300	2007	2016	RP19

ACCOSSATO

STREET RACING

MANUBRI IN ACCIAIO Ø 22mm / Ø 22mm steel handlebars

CODICE Reference	COLORE Colour	CARATTERISTICHE TECNICHE Technical details	
HB163	N ■ NERO / black	Ø	22MM / 7/8''
		A	750MM
		B	132MM
		C	130MM
		D	113MM
		MATERIALE / raw material	ACCIAIO / steel

ACCESSORI / accessories

ACCESSORI Accessories	DESCRIZIONE Description
TK001	CONTRAPPESI PER MANUBRI
TK002	
TK004	handlebar ends

APPLICAZIONI / application list - HB163

CC	MODELLO Model	ANNI / years DA From	ANNI / years A To	TELAIO chassis
	AEON			
180	Cobra 180	2007	2011	AT 18
	APRILIA			
125	Tuono 125	2003	2004	SF
650	Pegaso 650	1992	1996	GA
650	Pegaso 650	1992	1996	MX
650	Pegaso 650	1997	2000	ML
650	Pegaso 650 i.e.	2001	2004	VD
1000	Tuono 1000 V4	2011	2014	TY
	BMW			
800	F 800 ST	2004	2012	E8ST
850	R 850 R	1994	2002	BMW 259
850	R 850 R	1994	2002	R21
1100	R 1100 R	1993	2001	BMW 259
1150	R 1150 R	1999	2006	R21
	BOMBARDIER			
650	DS 650, Baja X	2007	2013	B
	DUCATI			
400	Monster 400	2000	2003	M3
600	Monster 600	1993	1998	M
600	Monster 600 / Dark	1998	1998	M3
620	Monster 620 / Dark	2005	2006	M4
695	Monster 695	2007	2008	M4
696	Monster 696	2010	2014	M5
750	Monster 750 / Dark	1999	1999	M
750	Monster 750 i.e.	2002	2002	M4
800	Hypermotard 796	2010	2012	B1
800	Monster 800 i.e. S,Dark	2005	2007	M4
800	Monster 800 S2R, Dark	2005	2007	M4
900	Monster 900	2001	2002	M2
900	Monster 900	1993	1999	M
900	Monster 900 i.e. ,Dark	1999	1999	M4
900	Monster 916 S4	2001	2003	M4
1000	Monster 1000 Dark	2003	2005	M4
1000	Monster 1000 i.e.	2003	2005	M4
1000	Monster 1000 S	2005	2005	M4
1000	Monster 1000 S2R	2006	2008	M4
	GAS GAS			
50	Wild HP 50	2004	2004	Wild HP 50
300	Wild HP 300	2005	2003	Wild HP 300
450	Wild HP 450	2004	2007	Wild HP 450
	HONDA			
125	CBF 125	2009	2016	JC 40
125	XL 125 Varadero	2001	2009	JC 32
250	CB 250 Two fifty	1999	2001	MC 26
400	CB 400 N	1979	1983	CM400N
500	CB 500	1994	1994	PC 26
500	CB 500	1994	1994	PC 32
500	CBF 500	2004	2007	PC 39
600	CB 600 Hornet	2001	2001	PC 34
600	CB 600 Hornet	2001	2001	PC 36
600	CB 600 Hornet	2001	2001	PC 41
600	CBF 600	2004	2005	PC 38
600	CBF 600	2009	2009	PC 43
600	XL 600 R	1983	1987	PD 03
600	XL 600 R	1983	1987	PD 03
650	CB 650 F	2014	2016	RC 75
650	NT 650 Deauville	1998	2005	RC 47
650	NTV 650	1988	1995	RC 33
650	NX 650 Dominator	1988	1989	RD 02

STREET RACING

ACCOSSATO

MANUBRI IN ACCIAIO Ø 22mm / Ø 22mm steel handlebars

CC	MODELLO Model	ANNI / years DA From	A To	TELAIO chassis
650	NX 650 Dominator	1988	1989	RD 08
650	SLR 650	1999	1999	RD 09
650	XL 650 V Transalp	2001	2003	RD 10
650	XL 650 V Transalp	2000	2003	RD 11
700	NT 700 V Deauville	2006	2016	RC 52
700	NT 700 V Deauville	2006	2015	RC 59
750	CB 750 seven fifty	2001	2001	RC 42
750	XRV 750 Africa Twin	1990	1992	RD 04
750	XRV 750 Africa Twin	1993	2003	RD 07
900	CB 900 Hornet	2002	2007	SC 48
1000	CB 1000 Big One	1993	1996	SC 30
1000	CB 1000 R	2011	2014	SC 60
1000	CBF 1000 F	2006	2016	SC 58
1000	CBF 1000 F	2006	2016	SC 64
1000	GL 1000	1980	1980	GL1
1000	XL 1000 Varadero	2001	2002	SD 01
1000	XL 1000 Varadero	2003	2011	SD 02
1100	CB 1100 X-11	2001	2001	SC 42
1300	CB 1300	2003	2009	SC 40
1300	CB 1300	2003	2009	SC 54
1300	CB 1300 X-4	1997	2003	SC 38
	HYOSUNG			
125	125 Karion	2007	2011	RTT
125	GT 125 naked	2015	2017	GT
250	GT 250 naked	2001	2016	GT
650	GT 650 naked	2005	2016	GT 650
	KAWASAKI			
50	KFX 50	2003	2006	KFX 50
250	KFX 250	2004	2016	KFX 250
300	KLF 300 Bayou, C	1997	2001	LF 300 B
400	KLF 400 Bayou	1996	1999	LF 400 B
500	ER-5, Twister	1997	2000	ER 500 A
500	ER-5, Twister	2001	2005	ER500A(C)
550	ZR 550 Zephyr	1991	1995	ZR550B
600	ZL 600 Eliminator	1995	1997	ZL600B
650	ER-6f	2006	2008	EX650A
650	ER-6f	2009	2011	EX650C
650	ER-6f	2012	2016	EX650E
650	ER-6n	2006	2008	ER650A
650	ER-6n	2009	2011	ER650C
650	ER-6n	2012	2016	ER650E
650	Versys 650	2007	2009	LE650A
650	Versys 650	2010	2010	LE650C
650	W 650	1999	2005	EJ650A
650	Z 650	2017	2017	KZ 650 B
650	Z 650	2017	2017	KZ 650 D
750	Z 750	2004	2006	ZR750J
750	Z 750 S	2004	2006	ZR750J
750	Z 750	2011	2012	ZR750L (L,M)
750	Z 750	2011	2012	ZR750N (N,P)
750	Z 750 R	2011	2012	ZR750N
750	ZR 750 Zephyr	1991	1996	ZR 750C
750	ZR-7	1999	2003	ZR750F
750	ZR-7 S	2001	2003	ZR750F
800	Z 800	2013	2016	ZR 800 A (A, B)
800	Z 800 e	2013	2016	ZR 800 C (C.,D.)
1000	KLV 1000	2004	2005	WVBS
1000	Z 1000	2003	2006	ZRT00A
1000	Z 1000, ABS	2007	2009	ZRT00B
1100	ZR 1100 Zephyr	1992	1995	ZRT10A
1100	ZRX 1100 R, S	1993	1999	ZRT10C
1200	ZRX 1200 R, S	2001	2003	ZRT20A
	KTM			
620	620 DUKE	1994	1997	---
640	640 DUKE II	1996	2006	KTM DK II
	KYMCO			
150	MXER 150	2004	2004	L2
	MZ			
125	RT 125	2000	2002	RT 125
	POLARIS			
50	Predator 50	2014	2015	Predator 50
90	Predator 90	2003	2005	Predator 90
250	Trail Blazer 250	2005	2016	Trail Blazer 250 E
330	Trail Boss 330	2007	2013	Trail Boss 330 E
499	Predator 501	2007	2012	Predator 500 E
500	Predator 500	2007	2012	Predator 500 E
500	Scrambler 500	2007	2012	Scrambler 500 E
	SUZUKI			
125	DR 125	2016	2017	SF43B
125	DR 125	1994	1995	SF44A
125	DR 125 SM	2009	2010	CS
250	LTZ 250	2009	2010	AJ 4A A
400	DR-Z 400 SM	2005	2009	WVBC
400	LTA 400	2008	2011	LTA 400
400	LTF 400	2008	2012	LTF 400
400	LTZ 400	2004	2012	S4/AK/47
500	GS 500	1989	1996	GM51B
500	GS 500	1989	1996	GM51A
500	GS 500	2001	2002	BK
500	LTA 500 King Quad	2004	2012	TS 50
600	DR 600	1985	1989	SN41A
600	GSF 600 Bandit	1995	1998	GN77B
600	GSF 600 Bandit	2000	2004	WVA8
600	GSR 600	2006	2010	WVB9
650	GSF 650 Bandit	2005	2006	WVB5
650	GSF 650 Bandit, S	2007	2008	WVCJ
650	GSF 650 Bandit, S	2009	2012	WVCZ
650	GSX 650 F	2005	2012	WVCJ
650	DL 650 V-Strom	2004	2011	WVB1
650	DR 650	1990	1991	SP41B
650	DR 650	1990	1991	SP42B
650	DR 650	1991	1993	SP43B
650	DR 650	1992	1993	SP44B
650	DR 650	1994	1995	SP45B
650	DR 650	1996	1997	SP46B
650	SV 650 N	1999	2002	AV
650	SV 650 N	2003	2010	WVBY
650	SFV 650 Gladius	2009	2015	WVCX
650	XF 650 Freewind	1997	2001	AC
700	LTA 700 X	2006	2007	AP 41 A
700	LTA 700 King Quad	2006	2007	S7/AP/41
750	GSR 750	2011	2016	C5
750	GSX 750	1998	2001	AE
800	DR 800	1991	1993	SR42B
800	DR 800	1991	1993	SR43B
1000	DL 1000 V-Strom	2002	2010	WVBS
1000	SV 1000 N	2003	2007	WVBX
1100	GSX 1100 G	1986	1988	GV74A
1200	GSF 1200 N, S	1996	2000	GV 75A
1200	GSF 1200 N, S	2001	2005	WVA9
1200	GSF 1200 N, S	2006	2006	WVCB
1200	GSX 1200	1999	2001	A3

ACCOSSATO

STREET RACING

MANUBRI IN ACCIAIO Ø 22mm / Ø 22mm steel handlebars

CC	MODELLO Model	ANNI / years DA From	A To	TELAIO chassis
1250	GSF 1250 N, S	2007	2016	WVCH
1250	GSX 1250 F	2010	2016	WVCH
1400	GSX 1400	2002		WVBN
	TRIUMPH			
675	Street Triple 675	2007	2014	D67LD
800	Bonneville 800	2001	2014	908MD
800	Scrambler 800	2006	2014	986MG
885	Thunderbird Sport	1995	2014	T309RT
900	Bonneville 900	2001	2014	986MF
900	Speed Triple 900	1994	2014	T 509
900	Tiger 900	1993	2014	T400
900	Tiger 900	1993	2014	T709
900	Trophy 900	1992	2014	T300
900	Thruxton 900	2005	2014	986ME
955	Speed Triple 955	2002	2005	T 595
955	Tiger 955	2004	2006	709EN
1050	Speed Triple 1050	1993	2017	515NJ
1050	Tiger 1050	2006	2012	115NG
1200	Trophy 1200	2013	2013	T300
1200	Trophy 1200	2013	2013	T300E
	YAMAHA			
125	DT 125 R	1999	2000	3RM
125	DT 125 R	1989	1997	4BL-DE03
125	DT 125 RE, X	2004	2006	DE06
125	TW 125	2003	2003	DE01
125	TW 125	2003	2003	DE05
125	WR 125 R, X	2009	2011	DE07
125	XT 125 R, X	2009	2014	74
125	YBR 125	2005	2005	RE04
125	YBR 125	2010	2014	RE05
250	XG 250 Tricker	2005	2005	---
250	YFM 250 Bruin	2006	2005	YFM 250
350	YFM 350 R	2007	2013	Y3
400	XS 400	1977	1990	2A2
400	XS 400	1977	1990	12F, 12E
450	YFZ 450	2007	2013	Y45

CC	MODELLO Model	ANNI / years DA From	A To	TELAIO chassis
500	SR 500	1978	1999	2J4, 2J2
500	SR 500	1978	1999	48T
500	SR 500	1978	1999	1RU, 3EB
600	FZS 600 Fazer	1998	2003	RJ02
600	FZ 6, FZ 6S Fazer	2004	2006	RJ07
600	FZ 6, FZ 6S Fazer	2007	2008	RJ14
600	XJ 600 N, S	1992	2002	4BR
600	XJ 600 N, S	1992	2002	4LX
600	XJ 600 N,S	1992	2002	RJ01
600	XJ 6 , Diversion / F	2009	2015	RJ19
600	XJ 6	2013	2015	RJ22
650	XJ 650	1980	1985	4K0
660	MT-03 (660)	2006	2010	RM02
700	MT-07	2014	2017	RM04
700	YFM 700 R	2007	2013	Y7
800	FZ-8 , ABS	2011	2015	RN25
850	TDM 850	1991	1995	3 VD
850	TDM 850	1996	2001	4TX
900	TDM 900	2002	2005	RN08
900	TDM 900	2006	2010	RN11
900	TDM 900	2007	2010	RN18
900	XJ 900	1983	1985	31A
900	XJ 900 N / F	1983	1985	58L
900	XJ 900 F	1985	1993	4BB
900	XJ 900 S Diversion	1995	2001	4KM
1000	FZS 1000 Fazer	2001	2005	RN 06
1000	FZS 1000 Fazer	2004	2005	RN14
1000	FZ1, FZ1S Fazer	2006	2012	RN16
1100	BT 1100 Bulldog	2002	2006	RP05
1200	VMX 1200	1986	1997	2EN
1200	VMX 1200	1995	2004	2LT
1200	XJR 1200 / SP	1995	1997	4PU
1300	XJR 1300	1999	2001	RP02
1300	XJR 1300	2002	2003	RP06
1300	XJR 1300	2004	2006	RP10
1300	XJR 1300	2007	2016	RP19

STREET RACING

MANUBRI IN ACCIAIO Ø 22mm / Ø 22mm steel handlebars

CODICE Reference	COLORE Colour	CARATTERISTICHE TECNICHE Technical details		APPLICAZIONI Application
HB164	CROMATO / chromed	Ø	22MM / 7/8''	SUZUKI SV650 2003 - 2010
		A	722MM	
		B	63MM	
		C	165MM	
		D	122MM	
		MATERIALE / raw material	ACCIAIO / steel	
		FORI / pierced	NO	



CODICE Reference	COLORE Colour	CARATTERISTICHE TECNICHE Technical details		APPLICAZIONI Application
HB165	CROMATO / chromed	Ø	22MM / 7/8''	SUZUKI SV650 2003 - 2010
		A	669MM	
		B	96MM	
		C	90,MM	
		D	122MM	
		MATERIALE / raw material	ACCIAIO / steel	
		FORI / pierced	NO	

CODICE Reference	COLORE Colour	CARATTERISTICHE TECNICHE Technical details		APPLICAZIONI Application
HB166	CROMATO / chromed	Ø	22MM / 7/8''	SUZUKI SV650 2003 - 2010
		A	669MM	
		B	76MM	
		C	100MM	
		D	122MM	
		MATERIALE / raw material	ACCIAIO / steel	
		FORI / pierced	NO	

ACCESSORI / accessories

CODICE Reference	DESCRIZIONE Description
TK001	CONTRAPPESI PER MANUBRI handlebar ends
TK002	
TK004	

SCHEDE MANUBRI IN ALLUMINIO
aluminium handlebars data sheets

Ø 22mm: **180 - 191**

Ø 28mm: **192**



STREET RACING

MANUBRI IN ALLUMINIO Ø 22mm
aluminium handlerbars Ø 22mm

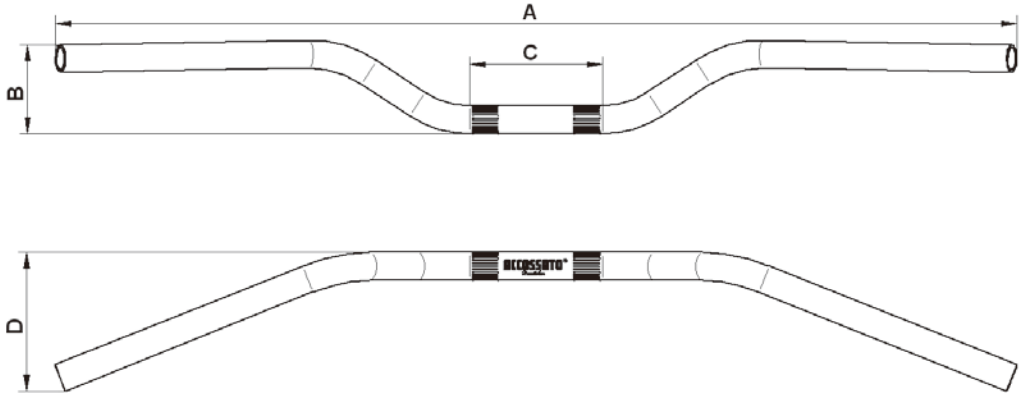



CODICE Reference	CARATTERISTICHE TECNICHE Technical details		COLORI Colours
HB152	Ø	22MM / 7/8''	N NERO / black O ARANCIONE / orange Y ORO / gold B BLU / blue R ROSSO / red S ARGENTO / silver
	A	755MM	
	B	134MM	
	C	146MM	
	D	102MM	
	MATERIALE raw material	ALLUMINIO aluminium	

ACCESSORI / accessories

ACCESSORI Accessories	DESCRIZIONE Description
TK001	CONTRAPPESI PER MANUBRI
TK002	
TK004	handlebar ends

ACCOSSATO

STREET RACING

MANUBRI IN ALLUMINIO Ø 22mm
aluminium handlerbars Ø 22mm

APPLICAZIONI / application list - HB152

CC	MODELLO Model	ANNI / years DA From	A To	TELAIO chassis
	APRILIA			
650	Moto 6.5	1995	1999	MH00
650	Pegaso 650	1997	2000	ML
650	Pegaso 650 i.e.	2001	2004	RW
660	Pegaso 650 Strada	2005	2009	VD
750	SL 750 Shiver / GT	2007	2016	RA
750	SMV 750 Dorsoduro	2008	2016	SM
850	NA 850 Mana / GT	2007	2016	RC
1000	ETV 1000 Capo Nord	2001	2007	PS
1000	RSV 1000 Tuono	2002	2005	RP
1000	Tuono 1000 R / Factory	2006	2009	RR
	BENELLI			
900	TnT 899s	2008	2009	TN
900	Trek 899	2009	2011	TK
1130	TnT 1130 / Sport Evo / Titanium	2005	2007	TN
1130	Trek 1130 / Amazonas	2007	2008	TK
	BIMOTA			
1100	DB6 Delirio	2011	2013	DB06
	BMW			
100	R 100 CS	1980	1984	BMW247
650	F 650 / ST	1996	2000	BMW169
650	F 650 CS	2000	2005	E650C
650	F 650 CS	2000	2005	K14
650	F 650 GS / PD	1999	2007	E650G
650	F 650 GS / PD	1999	2007	R13
800	F 800 GS	2006	2012	E8GS
850	R 850 R	1994	2002	BMW259
850	R 850 R	1994	2002	R11R
850	R 850 R	1994	2002	R21
1100	R 1100 R	1993	2001	BMW259
1100	R 1100 R	1993	2001	R11R
1150	R 1150 R / Rockster	2002	2005	R21
1150	R 1150 GS / PD	1998	2003	R21
1200	R 1200 R	2005	2010	R1ST
1200	R 1200 GS / PD / Adventure	2002	2007	R12
	BUELL			
984	XB9S Lightning	2003	2004	XB1
1200	S1 Lightning 1200	1999	2002	EB1
1200	XB12S Lightning	2002	2011	XB1
	CAGIVA			
600	Canyon 600	1995	1998	G
900	Gran Canyon 900 i.e.	1998	2000	M3
	DUCATI			
400	Monster 400	2000	2003	M3
400	Montser 400 / 400 i.e.	2004	2008	M4
600	Monster 600	1993	1998	M
600	Monster 600	1999	2001	M3
620	Monster 620 / 620 i.e. / Dark	2002	2006	M4
620	Multistrada 620	2006	2006	A1
695	Monster 695	2007	2008	M4
700	Monster 696	2010	2012	M5
750	Monster 750	1996	1999	M1
750	Monster 750	2002	2002	M4
800	Monster 800 / S2R	2005	2006	M4
900	Monster 900	1993	1999	M
900	Monster 900	2000	2002	M2
900	Monster 900 / S2R 1000 / S4-R / S4Rs	1992	2017	M4
1000	GT 1000 / Touring	2008	2010	C1
1000	Monster 1000	2004	2008	M4
1000	Multistrada 1000 DS	2003	2006	A1
1000	Multistrada 1000 DS	2003	2006	A1
1099	Streetfighter / S	2009	2014	H7
1100	Monster 1100 / S	2009	2010	M5
1100	Multistrada 1100	2007	2009	A1
1100	Hypermotard 1100 / S	2008	2012	B1
	HONDA			
125	Varadero 125	2000	2011	JC32
250	CB 250 Two Fifty	1999	2001	MC26
400	CB 400 N	1979	1983	CM400N
500	CB 500	1994	1994	PC26
500	CB 500	1994	1994	PC32
500	CBF 500	2004	2007	PC39
600	CB 600 F Hornet	1998	2006	PC34
600	CB 600 F Hornet	1998	2006	PC34
600	CB 600 F Hornet	1998	2006	PC36
600	CB 600 F Hornet	1998	2006	PC41
600	CBF 600 / S	2007	2012	PC38
600	CBF 600 / S	2007	2012	PC43
600	Transalp	1987	1999	RD13
650	FX 650 Vigor	1999	2002	RD09
650	NTV 650 Revere	1988	2001	RC33
650	NX 650 Dominator	1988	1989	RD08
650	NT 650 V Deauville	1998	2001	RC47
650	NT 650 V Deauville	1998	2001	RC47
650	SLR 650	1999	1999	RD09
650	XL 650 V Transalp	2001	2003	RD10
650	XL 650 V Transalp	2000	2003	RD11
650	XRV 650 Africa Twin	1988	1990	RD03
750	CB 750 Seven Fifty	2001	2001	RC42
750	XRV 750 Africa Twin	1990	1992	RD04
750	XRV 750 Africa Twin	1993	2003	RD07
900	CB 900 F Hornet	2002	2007	SC48
1000	CB 1000 F	1989	1992	SC30
1000	CB 1000 R	2011	2014	SC60
1000	CBF 1000	2010	2013	SC58
1000	XL 1000 V Varadero	1999	2002	SD01
1000	XL 1000 V Varadero	1999	2002	SD02
1100	X-Eleven	1999	2001	SC42
1300	CB 1300 / S	2010	2012	SC54
	HYOSUNG			
650	GT 650 Naked	2005	2016	GT650
	KAWASAKI			
500	ER-5	1997	2005	ER500A
500	ER-5	1997	2005	ER500A
550	Zephyr 550	1990	1994	ZR550B
600	ZL 600 Eliminator	1995	1997	ZL600B
650	W 650	1999	2005	EJ650A
650	ER-6n	2006	2008	ER650A
650	ER-6f	2006	2008	EX650A
650	ER-6n	2009	2011	ER650C
650	ER-6f	2009	2011	EX650C
650	Versys	2007	2009	LE650A
750	Z 750 / S	2004	2006	ZR750J
750	Z 750	2007	2012	ZR750L
750	ZR-7 / S	1999	2003	ZR750F
750	Zephyr 750	1991	1994	ZR750C

STREET RACING

MANUBRI IN ALLUMINIO Ø 22mm
aluminium handlerbars Ø 22mm

CC	MODELLO Model	ANNI / years DA From	A To	TELAIO chassis
1000	KLV 1000	2004	2005	WVBS
1000	Z 1000	2003	2006	ZRT00A
1000	Z 1000	2007	2009	ZRT00B
1100	Zephyr 1100	1992	1995	ZRT10A
1100	ZRX 1100	1997	1999	ZRT10C
1100	ZRX 1100	1997	1999	ZRT10C
1200	ZRX 1200 / R / S	2001	2004	ZRT20A
1300	Z 1300	1980	1985	KZT30AG
1300	Z 1300 DFI	1984	1989	KZT00A
	KYMCO			
125	MXER 150	2002	2003	L2
250	KXR 250	2003	2004	L3
	MOTO GUZZI			
750	Breva 750 i.e.	2003	2007	LL
850	Breva 850	2006	2008	LP
1200	Griso 8V	2005	2016	LS
1200	1200 Sport 4V	2006	2013	LP
	MOTO MORINI			
1200	9 1/2	2007	2008	2
1200	Corsaro / Avio / Veloce 1200	2005	2009	1
	MV AUGUSTA			
900	Brutale 989 R	2008	2008	F4
1078	Brutale 1078 RR	1994	2016	F4
	SACHS			
650	Roadster 650 V1	2000	2005	830
800	Roadster 800 V2	2000	2005	835
	SUZUKI			
125	DR 125	1994	1995	SF44A
350	DR 350	1990	1998	SK42B
400	DR-Z 400 S	2000	2009	WVBC
400	DR-Z 400 SM	2005	2009	WVB8
400	GSF 400 Bandit	1991	1993	GK75B
500	GS 500 E	1989	1996	GM51B
500	GS 500 F	2007	2007	WVBK
600	GSR 600	2006	2010	WVB9
600	GSF 600 Bandit / S	1995	1998	GN77B
600	GSF 600 Bandit / S	2000	2004	WVA8
650	GSF 650 Bandit / S	2005	2006	WVB5
650	GSF 650 Bandit / S	2007	2008	WVCJ
650	DL 650 V-Strom	2004	2011	WVB1
650	DR 650	1990	1991	SP41B
650	DR 650	1990	1991	SP42B
650	DR 650	1991	1993	SP43B
650	DR 650	1992	1993	SP44B
650	DR 650	1994	1995	SP45B
650	DR 650	1996	1997	SP46B
650	SV 650 N	1999	2002	AV
650	SV 650 N	2003	2010	WVBY
650	SFV 650 Gladius	2009	2015	WVCX
650	XF 650 Freewind	1997	2001	AC
750	GSX 750	1998	2001	AE
800	DR 800	1991	1993	SR42B
800	DR 800	1991	1993	SR43B
1000	DL 1000 V-Strom	2002	2010	WVBS
1000	SV 1000 N	2003	2007	WVBX
1100	GSX 1100 G	1986	1988	GV74A
1200	GSF 1200 Bandit / S	1996	2000	GV75A
1200	GSF 1200 Bandit / S	1996	2000	WVA9
1200	GSF 1200 Bandit / S	1996	2000	WVCB
1200	GSX 1200	1999	2001	A3
1250	GSF 1250 Bandit / S	2007	2016	WVCH
1300	B-King	2008	2010	WVCR
1400	GSX 1400	2002	2005	WVBN
	TRIUMPH			
600	Speed Four	2004	2007	806LB
675	Street Triple	2007	2011	D67LD
885	Thunderbird Sport	1995	2014	T309RT
900	Bonneville America	2001	2014	908M
900	Legend TT	1998	2002	T309RT
900	Scrambler	2006	2016	986MG
900	Tiger 900	1993	2014	T400
900	Tiger 900	1993	2014	T709
900	Trophy 900	1992	2014	T300
900	Trophy 900	1992	2014	T300E
955	Speed Triple 955i	1997	2004	595RPT
955	Speed Triple 955i	1997	2004	595N
955	Tiger 955	2004	2006	709EN
1050	Speed Triple	1993	2017	T509
1050	Speed Triple 1050	1993	2017	515NJ
1050	Tiger 1050	2006	2012	115NG
1200	Trophy 1200	2013	2013	T300
1200	Trophy 1200	2013	2013	T300E
	YAMAHA			
125	TDR 125	1989	1994	5AN
400	XS 400	1977	1990	2A2
500	SR 500	1978	1999	2J4
500	SR 500	1978	1999	48T
600	FZS 600 Fazer	1998	2003	RJ02
600	FZ 6 / Fazer	2004	2006	RJ07
600	FZ 6 / Fazer / S2	2007	2008	RJ14
600	XJ 6 / Diversion	2009	2015	RJ19
600	XJ 600 N / S	1997	2002	4BR
600	XJ 600 N / S	1996	1996	4BRA
650	XJ 650	1980	1985	4K0
660	MT-03	2006	2012	RM02
850	TDM 850	1994	1995	3VD
850	TDM 850	1996	1999	4TX
900	TDM 900	2002	2005	RN08
900	TDM 900	2006	2006	RN11
900	TDM 900	2008	2010	RN18
900	XJ 900	1983	1985	31A
900	XJ 900	1983	1985	58L
900	XJ 900	1983	1985	4BB
900	XJ 900 S Diversion	1995	2001	4KM
1000	FZS 1000 Fazer	2001	2005	RN06
1000	FZS 1000 Fazer	2001	2005	RN14
1000	FZ 1 / Fazer	2007	2009	RN16
1100	BT 1100 Bulldog	2002	2006	RP05
1200	XJR 1200	1995	1997	4PU
1300	XJR 1300	1999	2001	RP02
1300	XJR 1300	2002	2003	RP06
1300	XJR 1300	2004	2006	RP10
1300	XJR 1300	2007	2016	RP19
1700	MT-01	2005	2006	RP12
1700	MT-01	2007	2009	RP18

ACCOSSATO

STREET RACING

MANUBRI IN ALLUMINIO Ø 22mm
aluminium handlerbars Ø 22mm

CODICE Reference	CARATTERISTICHE TECNICHE Technical details		COLORE Colour
HB167	Ø	22MM / 7/8''	N NERO / black O ARANCIONE / orange Y ORO / gold B BLU / blue R ROSSO / red S ARGENTO / silver G VERDE / green
	A	820MM	
	B	87MM	
	C	145MM	
	D	75MM	
	MATERIALE raw material	ALLUMINIO aluminium	

ACCESSORI / accessories

ACCESSORI Accessories	DESCRIZIONE Description
TK001	CONTRAPPESI PER MANUBRI
TK002	
TK004	handlebar ends

APPLICAZIONI / application list - HB167

CC	MODELLO Model	ANNI / years DA From	A To	TELAIO chassis
	APRILIA			
650	Moto 6.5	1995	1999	MH00
650	Pegaso 650	1997	2000	ML
650	Pegaso 650 i.e.	2001	2004	RW
660	Pegaso 650 Strada	2005	2009	VD
750	SL 750 Shiver / GT	2007	2016	RA
750	SMV 750 Dorsoduro	2008	2016	SM
850	NA 850 Mana / GT	2007	2016	RC
1000	ETV 1000 Capo Nord	2001	2007	PS
1000	RSV 1000 Tuono	2002	2005	RP
1000	Tuono 1000 R / Factory	2006	2009	RR
	BENELLI			
900	TnT 899s	2008	2009	TN
900	Trek 899	2009	2011	TK
1130	TnT 1130 / Sport Evo / Titanium	2005	2007	TN
1130	Trek 1130 / Amazonas	2007	2008	TK
	BIMOTA			
1100	DB6 Delirio	2011	2013	DB06
	BMW			
100	R 100 CS	1980	1984	BMW247
650	F 650 / ST	1996	2000	BMW169
650	F 650 CS	2000	2005	E650C
650	F 650 CS	2000	2005	K14
650	F 650 GS / PD	1999	2007	E650G
650	F 650 GS / PD	1999	2007	R13
800	F 800 GS	2006	2012	E8GS
850	R 850 R	1994	2002	BMW259
850	R 850 R	1994	2002	R11R
850	R 850 R	1994	2002	R21
1100	R 1100 R	1993	2001	BMW259
1100	R 1100 R	1993	2001	R11R
1150	R 1150 R / Rockster	2002	2005	R21
1150	R 1150 GS / PD	1998	2003	R21
1200	R 1200 R	2005	2010	R1ST
1200	R 1200 GS / PD / Adventure	2002	2007	R12

CC	MODELLO Model	ANNI / years DA From	A To	TELAIO chassis
	BUELL			
984	XB9S Lightning	2003	2004	XB1
1200	S1 Lightning 1200	1999	2002	EB1
1200	XB12S Lightning	2002	2011	XB1
	CAGIVA			
600	Canyon 600	1995	1998	G
900	Gran Canyon 900 i.e.	1998	2000	M3
	DUCATI			
400	Monster 400	2000	2003	M3
400	Montser 400 / 400 i.e.	2004	2008	M4
600	Monster 600	1993	1998	M
600	Monster 600	1999	2001	M3
620	Monster 620 / 620 i.e. / Dark	2002	2006	M4
620	Multistrada 620	2006	2006	A1
695	Monster 695	2007	2008	M4
700	Monster 696	2010	2012	M5
750	Monster 750	1996	1999	M1
750	Monster 750	2002	2002	M4
800	Monster 800 / S2R	2005	2006	M4
900	Monster 900	1993	1999	M
900	Monster 900	2000	2002	M2
900	Monster 900 / S2R 1000 / S4-R / S4Rs	1992	2017	M4
1000	GT 1000 / Touring	2008	2010	C1
1000	Monster 1000	2004	2008	M4
1000	Multistrada 1000 DS	2003	2006	A1
1000	Multistrada 1000 DS	2003	2006	A1
1099	Streetfighter / S	2009	2014	H7
1100	Monster 1100 / S	2009	2010	M5
1100	Multistrada 1100	2007	2009	A1
1100	Hypermotard 1100 / S	2008	2012	B1
	HONDA			
125	Varadero 125	2000	2011	JC32
250	CB 250 Two Fifty	1999	2001	MC26
400	CB 400 N	1979	1983	CM400N
500	CB 500	1994	1994	PC26

STREET RACING

ACCOSSATO

MANUBRI IN ALLUMINIO Ø 22mm
aluminium handlerbars Ø 22mm

CC	MODELLO Model	ANNI / years DA From	A To	TELAIO chassis
500	CB 500	1994	1994	PC32
500	CBF 500	2004	2007	PC39
600	CB 600 F Hornet	1998	2006	PC34
600	CB 600 F Hornet	1998	2006	PC34
600	CB 600 F Hornet	1998	2006	PC36
600	CB 600 F Hornet	1998	2006	PC41
600	CBF 600 / S	2007	2012	PC38
600	CBF 600 / S	2007	2012	PC43
600	Transalp	1987	1999	RD13
650	FX 650 Vigor	1999	2002	RD09
650	NTV 650 Revere	1988	2001	RC33
650	NX 650 Dominator	1988	1989	RD08
650	NT 650 V Deauville	1998	2001	RC47
650	NT 650 V Deauville	1998	2001	RC47
650	SLR 650	1999	1999	RD09
650	XL 650 V Transalp	2001	2003	RD10
650	XL 650 V Transalp	2000	2003	RD11
650	XRV 650 Africa Twin	1988	1990	RD03
750	CB 750 Seven Fifty	2001	2001	RC42
750	XRV 750 Africa Twin	1990	1992	RD04
750	XRV 750 Africa Twin	1993	2003	RD07
900	CB 900 F Hornet	2002	2007	SC48
1000	CB 1000 F	1989	1992	SC30
1000	CB 1000 R	2011	2014	SC60
1000	CBF 1000	2010	2013	SC58
1000	XL 1000 V Varadero	1999	2002	SD01
1000	XL 1000 V Varadero	1999	2002	SD02
1100	X-Eleven	1999	2001	SC42
1300	CB 1300 / S	2010	2012	SC54
	HYOSUNG			
650	GT 650 Naked	2005	2016	GT650
	KAWASAKI			
500	ER-5	1997	2005	ER500A
500	ER-5	1997	2005	ER500A
550	Zephyr 550	1990	1994	ZR550B
600	ZL 600 Eliminator	1995	1997	ZL600B
650	W 650	1999	2005	EJ650A
650	ER-6n	2006	2008	ER650A
650	ER-6f	2006	2008	EX650A
650	ER-6n	2009	2011	ER650C
650	ER-6f	2009	2011	EX650C
650	Versys	2007	2009	LE650A
750	Z 750 / S	2004	2006	ZR750J
750	Z 750	2007	2012	ZR750L
750	ZR-7 / S	1999	2003	ZR750F
750	Zephyr 750	1991	1994	ZR750C
1000	KLV 1000	2004	2005	WVBS
1000	Z 1000	2003	2006	ZRT00A
1000	Z 1000	2007	2009	ZRT00B
1100	Zephyr 1100	1992	1995	ZRT10A
1100	ZRX 1100	1997	1999	ZRT10C
1100	ZRX 1100	1997	1999	ZRT10C
1200	ZRX 1200 / R / S	2001	2004	ZRT20A
1300	Z 1300	1980	1985	KZT30AG
1300	Z 1300 DFI	1984	1989	KZT00A
	KYMCO			
125	MXER 150	2002	2003	L2
250	KXR 250	2003	2004	L3
	MOTO GUZZI			
750	Breva 750 i.e.	2003	2007	LL
850	Breva 850	2006	2008	LP
1200	Griso 8V	2005	2016	LS
1200	1200 Sport 4V	2006	2013	LP
	MOTO MORINI			
1200	9 1/2	2007	2008	2
1200	Corsaro / Avio / Veloce 1200	2005	2009	1
	MV AUGUSTA			
900	Brutale 989 R	2008	2008	F4
1078	Brutale 1078 RR	1994	2016	F4
	SACHS			
650	Roadster 650 V1	2000	2005	830
800	Roadster 800 V2	2000	2005	835
	SUZUKI			
125	DR 125	1994	1995	SF44A
350	DR 350	1990	1998	SK42B
400	DR-Z 400 S	2000	2009	WVBC
400	DR-Z 400 SM	2005	2009	WVB8
400	GSF 400 Bandit	1991	1993	GK75B
500	GS 500 E	1989	1996	GM51B
500	GS 500 F	2007	2007	WVBK
600	GSR 600	2006	2010	WVB9
600	GSF 600 Bandit / S	1995	1998	GN77B
600	GSF 600 Bandit / S	2000	2004	WVA8
650	DL 650 V-Strom	2004	2011	WVB1
650	DR 650	1990	1991	SP41B
650	DR 650	1990	1991	SP42B
650	DR 650	1991	1993	SP43B
650	DR 650	1992	1993	SP44B
650	DR 650	1994	1995	SP45B
650	DR 650	1996	1997	SP46B
650	SV 650 N	1999	2002	AV
650	SV 650 N	2003	2010	WVBY
650	SFV 650 Gladius	2009	2015	WVCX
650	XF 650 Freewind	1997	2001	AC
750	GSX 750	1998	2001	AE
800	DR 800	1991	1993	SR42B
800	DR 800	1991	1993	SR43B
1000	DL 1000 V-Strom	2002	2010	WVBS
1000	SV 1000 N	2003	2007	WVBX
1100	GSX 1100 G	1986	1988	GV74A
1200	GSF 1200 Bandit / S	1996	2000	GV75A
1200	GSF 1200 Bandit / S	1996	2000	WVA9
1200	GSF 1200 Bandit / S	1996	2000	WVCB
1200	GSX 1200	1999	2001	A3
1300	B-King	2008	2010	WVCR
1400	GSX 1400	2002	2005	WVBN
	TRIUMPH			
600	Speed Four	2004	2007	806LB
675	Street Triple	2007	2011	D67LD
885	Thunderbird Sport	1995	2014	T309RT
900	Bonneville America	2001	2014	908M
900	Legend TT	1998	2002	T309RT
900	Scrambler	2006	2016	986MG
900	Tiger 900	1993	2014	T400
900	Tiger 900	1993	2014	T709
900	Trophy 900	1992	2014	T300
900	Trophy 900	1992	2014	T300E
955	Speed Triple 955i	1997	2004	595RPT
955	Speed Triple 955i	1997	2004	595N
955	Tiger 955	2004	2006	709EN

ACCOSSATO

STREET RACING

MANUBRI IN ALLUMINIO Ø 22mm
aluminium handlerbars Ø 22mm

CC	MODELLO Model	ANNI / years DA From	A To	TELAIO chassis
1050	Speed Triple	1993	2017	T509
1050	Speed Triple 1050	1993	2017	515NJ
1050	Tiger 1050	2006	2012	115NG
1200	Trophy 1200	2013	2013	T300
1200	Trophy 1200	2013	2013	T300E
	YAMAHA			
125	TDR 125	1989	1994	5AN
400	XS 400	1977	1990	2A2
500	SR 500	1978	1999	2J4
500	SR 500	1978	1999	48T
600	FZS 600 Fazer	1998	2003	RJ02
600	FZ 6 / Fazer	2004	2006	RJ07
600	FZ 6 / Fazer / S2	2007	2008	RJ14
600	XJ 6 / Diversion	2009	2015	RJ19
600	XJ 600 N / S	1997	2002	4BR
600	XJ 600 N / S	1996	1996	4BRA
650	XJ 650	1980	1985	4K0
660	MT-03	2006	2012	RM02
850	TDM 850	1994	1995	3VD

CC	MODELLO Model	ANNI / years DA From	A To	TELAIO chassis
850	TDM 850	1996	1999	4TX
900	TDM 900	2002	2005	RN08
900	TDM 900	2006	2006	RN11
900	TDM 900	2008	2010	RN18
900	XJ 900	1983	1985	31A
900	XJ 900	1983	1985	58L
900	XJ 900	1983	1985	4BB
900	XJ 900 S Diversion	1995	2001	4KM
1000	FZS 1000 Fazer	2001	2005	RN06
1000	FZS 1000 Fazer	2001	2005	RN14
1000	FZ 1 / Fazer	2007	2009	RN16
1100	BT 1100 Bulldog	2002	2006	RP05
1200	XJR 1200	1995	1997	4PU
1300	XJR 1300	1999	2001	RP02
1300	XJR 1300	2002	2003	RP06
1300	XJR 1300	2004	2006	RP10
1300	XJR 1300	2007	2016	RP19
1700	MT-01	2005	2006	RP12
1700	MT-01	2007	2009	RP18

CODICE Reference	CARATTERISTICHE TECNICHE Technical details		COLORI Colours
HB169	Ø	22MM / 7/8''	N NERO / black O ARANCIONE / orange Y ORO / gold B BLU / blue R ROSSO / red S ARGENTO / silver G VERDE / green
	A	685MM	
	B	124MM	
	C	130MM	
	D	93MM	
	MATERIALE / raw material	ALLUMINIO / aluminium	
	DA FORARE / to drill		

APPLICAZIONI
application list

CC	MODELLO Model	ANNI / years DA From	A To
	DUCATI		
600	MONSTER 600	1993	2001
620	MONSTER 620	2002	2006
750	MONSTER 750	1996	2002

STREET RACING

MANUBRI IN ALLUMINIO Ø 22mm
aluminium handlerbars Ø 22mm

CODICE Reference	CARATTERISTICHE TECNICHE Technical details		COLORI Colours
HB170	Ø	22MM / 7/8''	N NERO / black O ARANCIONE / orange Y ORO / gold B BLU / blue R ROSSO / red S ARGENTO / silver G VERDE / green
	A	730MM	
	B	137MM	
	C	95MM	
	D	92MM	
	MATERIALE / raw material	ALLUMINIO / aluminium	
	DA FORARE / to drill		

APPLICAZIONI
application list

CC	MODELLO Model	ANNI / years DA From	A To
DUCATI			
800	MONSTER 800	2003	2004
900	MONSTER 900	1993	2002

CODICE Reference	CARATTERISTICHE TECNICHE Technical details		COLORI Colours
HB171	Ø	22MM / 7/8''	N NERO / black O ARANCIONE / orange Y ORO / gold B BLU / blue R ROSSO / red S ARGENTO / silver G VERDE / green
	A	750MM	
	B	100MM	
	C	115MM	
	D	112MM	
	MATERIALE / raw material	ALLUMINIO / aluminium	
	DA FORARE / to drill		

APPLICAZIONI
application list

CC	MODELLO Model	ANNI / years DA From	A To
HONDA			
600	HORNET 600	1998	2011
KAWASAKI			
750	Z750	2005	2012
SUZUKI			
650	SV650S	2015	2015
YAMAHA			
600	FZ6	2004	2007

CODICE Reference	CARATTERISTICHE TECNICHE Technical details		COLORI Colours
HB172	Ø	22MM / 7/8''	N NERO / black O ARANCIONE / orange Y ORO / gold B BLU / blue R ROSSO / red S ARGENTO / silver G VERDE / green
	A	690MM	
	B	130MM	
	C	125MM	
	D	132MM	
	MATERIALE / raw material	ALLUMINIO / aluminium	
	DA FORARE / to drill		

APPLICAZIONI
application list

CC	MODELLO Model	ANNI / years DA From	A To
HONDA			
900	HORNET 900	2002	2006
KAWASAKI			
650	ER6N	2006	2016
SUZUKI			
600	GSR600	2006	2010

ACCESSORI / accessories

ACCESSORI Accessories	DESCRIZIONE Description
TK001 TK002 TK004	CONTRAPPESI PER MANUBRI handlebar ends

ACCOSSATO

STREET RACING

MANUBRI IN ALLUMINIO Ø 22mm
aluminium handlerbars Ø 22mm

CODICE Reference	CARATTERISTICHE TECNICHE Technical details		COLORE Colour
HB174	Ø	22MM / 7/8''	N NERO / black
	A	855MM	O ARANCIONE / orange
	B	101MM	Y ORO / gold
	C	175MM	B BLU / blue
	D	91MM	R ROSSO / red
	MATERIALE raw material	ALLUMINIO aluminium	S ARGENTO / silver
			G VERDE / green

ACCESSORI / accessories

ACCESSORI Accessories	DESCRIZIONE Description
TK001	CONTRAPPESI PER MANUBRI
TK002	
TK004	handlebar ends

APPLICAZIONI / application list - HB174

CC	MODELLO Model	ANNI / years DA From	A To	TELAIO chassis
	APRILIA			
125	Tuono 125	2003	2004	SF
650	Pegaso 650	1992	1996	GA
650	Pegaso 650	1997	2000	ML
660	Pegaso 650 i.e.	2005	2009	VD
1000	Tuono 1000 V4	2011	2013	TY
	BMW			
800	F 800 ST	2004	2012	E8ST
	DUCATI			
400	Monster 400	2000	2003	M3
600	Monster 600	1993	1998	M
600	Monster 600 / Dark	1999	1999	M3
620	Monster 620 / Dark	2002	2005	M4
695	Monster 695	2007	2008	M4
700	Monster 696	2008	2012	M5
750	Monster 750 / Dark	1999	1999	M
750	Monster 750 i.e.	1996	2002	M4
800	Hypermotard 796	2010	2012	B1
800	Monster 800 i.e. S,Dark	2003	2006	M4
800	Monster 800 S2R, Dark	2003	2006	M4
900	Monster 900	2000	2002	M2
900	Monster 900	1993	1999	M
900	Monster 900 i.e. ,Dark	1999	1999	M4
900	Monster 916 S4	2001	2003	M4
1000	Monster 1000 Dark	2003	2005	M4
1000	Monster 1000 i.e.	2003	2005	M4
1000	Monster 1000 S	2005	2005	M4
1000	Monster 1000 S2R	2006	2007	M4
	HONDA			
125	CBF 125	2009	2016	JC 40
250	CB 250 Two fifty	1999	2001	MC 26
400	CB 400 N	1979	1983	CM400N
500	CB 500	1994	1994	PC 26
500	CB 500	1994	1994	PC 32
500	CBF 500	2004	2007	PC 39
600	CB 600 Hornet	2001	2001	PC 34
600	CB 600 Hornet	2001	2001	PC 36
600	CB 600 Hornet	2001	2001	PC 41
600	CBF 600	2004	2005	PC 38
600	CBF 600	2009	2009	PC 43
600	XL 600 R	1983	1987	PD 03
600	XL 600 R	1983	1987	PD 03
650	CB 650 F	2014	2016	RC 75
650	NTV 650	1988	1995	RC 33
650	SLR 650	1999	1999	RD 09
750	CB 750 seven fifty	2001	2001	RC 42
900	CB 900 Hornet	2002	2007	SC 48
1000	CB 1000 Big One	1993	1996	SC 30
1000	CB 1000 R	2011	2014	SC 60
1000	GL 1000	1980	1980	GL1
1100	CB 1100 X-11	2001	2001	SC 42
1300	CB 1300	2003	2009	SC 40
1300	CB 1300	2003	2009	SC 54
1300	CB 1300 X-4	1997	2003	SC 38
	HYOSUNG			
125	GT 125 naked	2015	2017	GT
250	GT 250 naked	2001	2016	GT
650	GT 650 naked	2005	2016	GT 650
	KAWASAKI			
500	ER-5, Twister	1997	2000	ER 500 A
500	ER-5, Twister	2001	2005	ER500A(C)
550	ZR 550 Zephyr	1991	1995	ZR550B
600	ZL 600 Eliminator	1995	1997	ZL600B
650	ER-6f	2006	2008	EX650A
650	ER-6f	2009	2011	EX650C
650	ER-6f	2012	2016	EX650E
650	ER-6n	2006	2008	ER650A
650	ER-6n	2009	2011	ER650C
650	ER-6n	2012	2016	ER650E
650	W 650	1999	2000	EJ650A
650	Z 650	2017	2017	KZ 650 B
650	Z 650	2017	2017	KZ 650 D
750	Z 750	2004	2006	ZR750J
750	Z 750 S	2004	2006	ZR750J
750	Z 750	2011	2012	ZR750L (L,M)
750	Z 750	2011	2012	ZR750N (N,P)
750	Z 750 R	2011	2012	ZR750N
750	ZR 750 Zephyr	1991	1996	ZR 750C
750	ZR-7	1999	2003	ZR750F
750	ZR-7 S	2001	2003	ZR750F

STREET RACING

MANUBRI IN ALLUMINIO Ø 22mm
aluminium handlerbars Ø 22mm

CC	MODELLO Model	ANNI / years DA From	A To	TELAIO chassis
800	Z 800	2013	2016	ZR 800 A (A, B)
800	Z 800 e	2013	2016	ZR 800 C (C.,D.)
1000	KLV 1000	2004	2005	WVBS
1000	Z 1000	2003	2006	ZRT00A
1000	Z 1000, ABS	2007	2009	ZRT00B
1100	ZR 1100 Zephyr	1992	1995	ZRT10A
1100	ZRX 1100 R, S	1993	1999	ZRT10C
1200	ZRX 1200 R, S	2001	2005	ZRT20A
	KTM			
620	620 DUKE	1994	1997	---
640	640 DUKE II	1996	2006	KTM DK II
	SUZUKI			
500	GS 500	1989	1996	GM51B
500	GS 500	1989	1996	GM51A
500	GS 500	2001	2007	WVBK
500	GS 500	2001	2007	BK
600	DR 600	1985	1989	SN41A
600	GSF 600 Bandit	1995	1998	GN77B
600	GSF 600 Bandit	2000	2004	WVA8
600	GSR 600	2006	2010	WVB9
650	GSF 650 Bandit	2005	2006	WVB5
650	GSF 650 Bandit, S	2007	2008	WVCJ
650	GSF 650 Bandit, S	2009	2012	WVCZ
650	DL 650 V-Strom	2004	2011	WVB1
650	SV 650 N	1999	2002	AV
650	SV 650 N	2003	2010	WVBY
650	SFV 650 Gladius	2009	2015	WVCX
750	GSR 750	2011	2016	C5
750	GSX 750	1998	2001	AE
1000	DL 1000 V-Strom	2006	2010	WVBS
1000	SV 1000 N	2003	2007	WVBX
1100	GSX 1100 G	1986	1988	GV74A
1200	GSF 1200 N, S	1996	2000	GV 75A
1200	GSF 1200 N, S	2001	2005	WVA9
1200	GSF 1200 N, S	2006	2006	WVCB
1200	GSX 1200	1999	2001	A3
1400	GSX 1400	2002	2007	WVBN
	TRIUMPH			
675	Street Triple 675	2007	2014	D67LD
800	Bonneville 800	2001	2014	908MD
800	Scrambler 800	2006	2014	986MG
885	Thunderbird Sport	1995	2014	T309RT
900	Bonneville 900	2001	2014	986MF
900	Speed Triple 900	1994	2014	T 509
900	Trophy 900	1992	2014	T300

CC	MODELLO Model	ANNI / years DA From	A To	TELAIO chassis
900	Thruxton 900	2005	2014	986ME
955	Speed Triple 955	2002	2005	T 595
1050	Speed Triple 1050	1993	2017	515NJ
1200	Trophy 1200	2013	2013	T300
1200	Trophy 1200	2013	2013	T300E
	YAMAHA			
125	YBR 125	2005	2005	RE04
125	YBR 125	2007	2012	RE05
400	XS 400	1977	1990	2A2
400	XS 400	1977	1990	12F, 12E
500	SR 500	1978	1999	2J4, 2J2
500	SR 500	1978	1999	48T
500	SR 500	1978	1999	1RU, 3EB
600	FZS 600 Fazer	1998	2003	RJ02
600	FZ 6, FZ 6S Fazer	2004	2006	RJ07
600	FZ 6, FZ 6S Fazer	2007	2008	RJ14
600	XJ 600 N, S	1997	2002	4BR
600	XJ 600 N, S	1992	2002	4LX
600	XJ 600 N,S	1992	2002	RJ01
600	XJ 6 , Diversion / F	2009	2015	RJ19
600	XJ 6	2013	2015	RJ22
650	XJ 650	1980	1985	4K0
660	MT-03	2006	2012	RM02
700	MT-07	2014	2017	RM04
800	FZ-8 , ABS	2011	2015	RN25
850	TDM 850	1991	1995	3 VD
850	TDM 850	1996	1999	4TX
900	TDM 900	2002	2005	RN08
900	TDM 900	2006	2006	RN11
900	TDM 900	2007	2010	RN18
900	XJ 900	1983	1985	31A
900	XJ 900 N / F	1983	1985	58L
900	XJ 900 F	1985	1993	4BB
900	XJ 900 S Diversion	1995	2001	4KM
1000	FZS 1000 Fazer	2001	2005	RN 06
1000	FZS 1000 Fazer	2001	2005	RN14
1000	FZ1, FZ1S Fazer	2006	2012	RN16
1100	BT 1100 Bulldog	2002	2006	RP05
1200	VMX 1200	1986	1997	2EN
1200	VMX 1200	1995	2004	2LT
1200	XJR 1200 / SP	1995	1997	4PU
1300	XJR 1300	1999	2001	RP02
1300	XJR 1300	2002	2003	RP06
1300	XJR 1300	2004	2006	RP10
1300	XJR 1300	2007	2013	RP19

ACCOSSATO

STREET RACING

MANUBRI IN ALLUMINIO Ø 22mm
aluminium handlerbars Ø 22mm

CODICE Reference	CARATTERISTICHE TECNICHE Technical details		COLORE Colour
HB175	Ø	22MM / 7/8''	N NERO / black
	A	750MM	O ARANCIONE / orange
	B	132MM	Y ORO / gold
	C	130MM	B BLU / blue
	D	113MM	R ROSSO / red
	MATERIALE raw material	ALLUMINIO OSSIDATO oxidized aluminium	S ARGENTO / silver
			G VERDE / green

ACCESSORI / accessories

ACCESSORI Accessories	DESCRIZIONE Description
TK001	CONTRAPPESI PER MANUBRI
TK002	
TK004	handlebar ends

APPLICAZIONI / application list - HB175

CC	MODELLO Model	ANNI / years DA From	A To	TELAIO chassis
	AEON			
180	Cobra 180	2007	2011	AT 18
	APRILIA			
125	Tuono 125	2003	2004	SF
650	Pegaso 650	1992	1996	GA
650	Pegaso 650	1992	1996	MX
650	Pegaso 650	1997	2000	ML
650	Pegaso 650 i.e.	2001	2004	VD
1000	Tuono 1000 V4	2011	2014	TY
	BMW			
800	F 800 ST	2004	2012	E8ST
850	R 850 R	1994	2002	BMW 259-R21
1100	R 1100 R	1993	2001	BMW 259
1150	R 1150 R	1999	2006	R21
	BOMBARDIER			
650	DS 650, Baja X	2007	2013	B
	DUCATI			
400	Monster 400	2000	2003	M3
600	Monster 600	1993	1998	M
600	Monster 600 / Dark	1998	1998	M3
620	Monster 620 / Dark	2005	2006	M4
695	Monster 695	2007	2008	M4
700	Monster 696	2010	2014	M5
750	Monster 750 / Dark	1999	1999	M
750	Monster 750 i.e.	2002	2002	M4
800	Hypermotard 796	2010	2012	B1
800	Monster 800 i.e. S,Dark	2005	2007	M4
800	Monster 800 S2R, Dark	2005	2007	M4
900	Monster 900	2001	2002	M2
900	Monster 900	1993	1999	M
900	Monster 900 i.e. ,Dark	1999	1999	M4
900	Monster 916 S4	2001	2003	M4
1000	Monster 1000 Dark	2003	2005	M4
1000	Monster 1000 i.e.	2003	2005	M4
1000	Monster 1000 S	2005	2005	M4
1000	Monster 1000 S2R	2006	2008	M4
	GAS GAS			
50	Wild HP 50	2004	2004	WILD HP 50
300	Wild HP 300	2005	2003	WILD HP 300
450	Wild HP 450	2004	2007	WILD HP 450
	HONDA			
125	CBF 125	2009	2016	JC 40
125	XL 125 Varadero	2001	2009	JC 32
250	CB 250 Two fifty	1999	2001	MC 26
400	CB 400 N	1979	1983	CM400N
500	CB 500	1994	1994	PC 26-PC32
500	CBF 500	2004	2007	PC 39
600	CB 600 Hornet	2001	2001	PC 34-PC36-PC41
600	CBF 600	2004	2005	PC 38
600	CBF 600	2009	2009	PC 43
600	XL 600 R	1983	1987	PD 03
650	CB 650 F	2014	2016	RC 75
650	NT 650 Deauville	1998	2005	RC 47
650	NTV 650	1988	1995	RC 33
650	NX 650 Dominator	1988	1989	RD 02-RD08
650	SLR 650	1999	1999	RD 09
700	NT 700 V Deauville	2006	2016	RC 52
700	NT 700 V Deauville	2006	2015	RC 59
750	CB 750 seven fifty	2001	2001	RC 42
750	XRV 750 Africa Twin	1990	1992	RD 04
750	XRV 750 Africa Twin	1993	2003	RD 07
900	CB 900 Hornet	2002	2007	SC 48
1000	CB 1000 Big One	1993	1996	SC 30
1000	CB 1000 R	2011	2014	SC 60
1000	CBF 1000 F	2006	2016	SC 58
1000	CBF 1000 F	2006	2016	SC 64
1000	GL 1000	1980	1980	GL1
1000	XL 1000 Varadero	2001	2002	SD 01
1000	XL 1000 Varadero	2003	2011	SD 02
1100	CB 1100 X-11	2001	2001	SC 42

STREET RACING

ACCOSSATO

MANUBRI IN ALLUMINIO Ø 22mm
aluminium handlerbars Ø 22mm

CC	MODELLO Model	ANNI / years DA From	A To	TELAIO chassis
1300	CB 1300	2003	2009	SC 40-SC54
1300	CB 1300 X-4	1997	2003	SC 38
	HYOSUNG			
125	125 Karion	2007	2011	RTT
125	GT 125 naked	2015	2017	GT
250	GT 250 naked	2001	2016	GT
650	GT 650 naked	2005	2016	GT 650
	KAWASAKI			
50	KFX 50	2003	2006	KFX 50
250	KFX 250	2004	2016	KFX 250
300	KLF 300 Bayou, C	1997	2001	LF 300 B
400	KLF 400 Bayou	1996	1999	LF 400 B
500	ER-5, Twister	1997	2000	ER 500 A
500	ER-5, Twister	2001	2005	ER500A(C)
550	ZR 550 Zephyr	1991	1995	ZR550B
600	ZL 600 Eliminator	1995	1997	ZL600B
650	ER-6f	2006	2008	EX650A
650	ER-6f	2009	2011	EX650C
650	ER-6f	2012	2016	EX650E
650	ER-6n	2006	2008	ER650A
650	ER-6n	2009	2011	ER650C
650	ER-6n	2012	2016	ER650E
650	Versys 650	2007	2009	LE650A
650	Versys 650	2010	2010	LE650C
650	W 650	1999	2005	EJ650A
650	Z 650	2017	2017	KZ 650 B
650	Z 650	2017	2017	KZ 650 D
700	KFX 700	2006	2011	K7SV60
700	KSV 700 V-Force	2004	2008	KSV 700
700	KVF 700 Prairie	2004	2004	KVF 700
750	Z 750	2004	2006	ZR750J
750	Z 750 S	2004	2006	ZR750J
750	Z 750	2011	2012	ZR750L (L,M)
750	Z 750	2011	2012	ZR750N (N,P)
750	Z 750 R	2011	2012	ZR750N
750	ZR 750 Zephyr	1991	1996	ZR 750C
750	ZR-7	1999	2003	ZR750F
750	ZR-7 S	2001	2003	ZR750F
800	Z 800	2013	2016	ZR 800 A (A, B)
800	Z 800 e	2013	2016	ZR 800 C (C.,D.)
1000	KLV 1000	2004	2005	WVBS
1000	Z 1000	2003	2006	ZRT00A
1000	Z 1000, ABS	2007	2009	ZRT00B
1100	ZR 1100 Zephyr	1992	1995	ZRT10A
1100	ZRX 1100 R, S	1993	1999	ZRT10C
1200	ZRX 1200 R, S	2001	2003	ZRT20A
	KTM			
620	620 DUKE	1994	1997	---
640	640 DUKE II	1996	2006	KTM DK II
	KYMCO			
150	MXER 150	2004	2004	L2
250	KXR 250	2003	2004	L3
	MZ			
125	RT 125	2000	2002	RT 125
	POLARIS			
50	Predator 50	2014	2015	PREDATOR 50
90	Predator 90	2003	2005	PREDATOR 90
250	Trail Blazer 250	2005	2016	TRAIL BLAZER 250 E
330	Trail Boss 330	2007	2013	TRAIL BOSS 330 E
499	Predator 501	2007	2012	PREDATOR 500 E

CC	MODELLO Model	ANNI / years DA From	A To	TELAIO chassis
500	Predator 500	2007	2012	PREDATOR 500 E
500	Scrambler 500	2007	2012	SCRAMBLER 500 E
	SUZUKI			
125	DR 125	2016	2017	SF43B
125	DR 125	1994	1995	SF44A
125	DR 125 SM	2009	2010	CS
250	LTZ 250	2009	2010	AJ 4A A
250	LTF 250	1987	2002	LTF 250
300	LTF 300	1987	1989	LTF 300
400	DR-Z 400 SM	2005	2009	WVBC
400	LTA 400	2008	2011	LTA 400
400	LTF 400	2008	2012	LTF 400
400	LTZ 400	2004	2012	S4/AK/47
500	GS 500	1989	1996	GM51B
500	GS 500	1989	1996	GM51A
500	GS 500	2001	2006	WVBK
500	GS 500	2001	2002	BK
500	LTA 500 King Quad	2004	2012	TS 50
500	LTF 500	1998	2002	AM 41 A
600	DR 600	1985	1989	SN41A
600	GSF 600 Bandit	1995	1998	GN77B
600	GSF 600 Bandit	2000	2004	WVA8
600	GSR 600	2006	2010	WVB9
650	GSF 650 Bandit	2005	2006	WVB5
650	GSF 650 Bandit, S	2007	2008	WVCJ
650	GSF 650 Bandit, S	2009	2012	WVCZ
650	GSX 650 F	2005	2012	WVCJ
650	DL 650 V-Strom	2004	2011	WVB1
650	DR 650	1990	1991	SP41B
650	DR 650	1990	1991	SP42B
650	DR 650	1991	1993	SP43B
650	DR 650	1992	1993	SP44B
650	DR 650	1994	1995	SP45B
650	DR 650	1996	1997	SP46B
650	SV 650 N	1999	2002	AV
650	SV 650 N	2003	2010	WVBY
650	SFV 650 Gladius	2009	2015	WVCX
650	XF 650 Freewind	1997	2001	AC
700	LTA 700 X	2006	2007	AP 41 A
700	LTA 700 King Quad	2006	2007	S7/AP/41
700	Quadrunner 700	2004	2017	TS 70
750	GSR 750	2011	2016	C5
750	GSX 750	1998	2001	AE
800	DR 800	1991	1993	SR42B
800	DR 800	1991	1993	SR43B
1000	DL 1000 V-Strom	2002	2010	WVBS
1000	SV 1000 N	2003	2007	WVBX
1100	GSX 1100 G	1986	1988	GV74A
1200	GSF 1200 N, S	1996	2000	GV 75A
1200	GSF 1200 N, S	2001	2005	WVA9
1200	GSF 1200 N, S	2006	2006	WVCB
1200	GSX 1200	1999	2001	A3
1250	GSF 1250 N, S	2007	2016	WVCH
1250	GSX 1250 F	2010	2016	WVCH
1400	GSX 1400	2002		WVBN
	TRIUMPH			
675	Street Triple 675	2007	2014	D67LD
800	Bonneville 800	2001	2014	908MD
800	Scrambler 800	2006	2014	986MG
885	Thunderbird Sport	1995	2014	T309RT

ACCOSSATO

MANUBRI IN ALLUMINIO Ø 22mm
aluminium handlerbars Ø 22mm

CC	MODELLO Model	ANNI / years DA From	A To	TELAIO chassis
900	Bonneville 900	2001	2014	986MF
900	Speed Triple 900	1994	2014	T 509
900	Tiger 900	1993	2014	T400-T709
900	Trophy 900	1992	2014	T300
900	Thruxton 900	2005	2014	986ME
955	Speed Triple 955	2002	2005	T 595
955	Tiger 955	2004	2006	709EN
1050	Speed Triple 1050	1993	2017	515NJ
1050	Tiger 1050	2006	2012	115NG
1200	Trophy 1200	2013	2013	T300-T300E
	YAMAHA			
125	DT 125 R	1999	2000	3RM
125	DT 125 R	1989	1997	4BL-DE03
125	DT 125 RE, X	2004	2006	DE06
125	TW 125	2003	2003	DE01
125	TW 125	2003	2003	DE05
125	WR 125 R, X	2009	2011	DE07
125	XT 125 R, X	2009	2014	74
125	YBR 125	2005	2005	RE04
125	YBR 125	2010	2014	RE05
250	XG 250 Tricker	2005	2005	---
250	YFM 250 Bruin	2006	2005	YFM 250
350	YFM 350 R	2007	2013	Y3
400	XS 400	1977	1990	2A2,12F, 12E
450	YFZ 450	2007	2013	Y45
500	SR 500	1978	1999	48T,1RU, 3EB
600	FZS 600 Fazer	1998	2003	RJ02
600	FZ 6, FZ 6S Fazer	2004	2006	RJ07
600	FZ 6, FZ 6S Fazer	2007	2008	RJ14
600	XJ 600 N, S	1992	2002	4BR

CC	MODELLO Model	ANNI / years DA From	A To	TELAIO chassis
600	XJ 600 N, S	1992	2002	4LX
600	XJ 600 N,S	1992	2002	RJ01
600	XJ 6 , Diversion / F	2009	2015	RJ19
600	XJ 6	2013	2015	RJ22
650	XJ 650	1980	1985	4K0
660	MT-03 (660)	2006	2010	RM02
700	MT-07	2014	2017	RM04
700	YFM 700 R	2007	2013	Y7
800	FZ-8 , ABS	2011	2015	RN25
850	TDM 850	1991	1995	3 VD
850	TDM 850	1996	2001	4CM
850	TDM 850	1996	2001	4TX
900	TDM 900	2002	2005	RN08
900	TDM 900	2006	2010	RN11
900	TDM 900	2007	2010	RN18
900	XJ 900	1983	1985	31A
900	XJ 900 N	1983	1985	58L
900	XJ 900 F	1985	1993	4BB
900	XJ 900 S Diversion	1995	2001	4KM
1000	FZS 1000 Fazer	2001	2005	RN 06
1000	FZS 1000 Fazer	2004	2005	RN14
1000	FZ1, FZ1S Fazer	2006	2012	RN16
1100	BT 1100 Bulldog	2002	2006	RP05
1200	VMX 1200	1986	1997	2EN
1200	VMX 1200	1995	2004	2LT
1200	XJR 1200 / SP	1995	1997	4PU
1300	XJR 1300	1999	2001	RP02
1300	XJR 1300	2002	2003	RP06
1300	XJR 1300	2004	2006	RP10
1300	XJR 1300	2007	2016	RP19

STREET RACING

MANUBRI IN ALLUMINIO Ø 28mm
aluminium handlerbars Ø 28mm



CODICE Reference	CARATTERISTICHE TECNICHE Technical details		COLORE Colour
HB173	Ø	28MM / 1 1/8''	N NERO / black O ARANCIONE / orange Y ORO / gold B BLU / blue R ROSSO / red S ARGENTO / silver G VERDE / green
	A	745MM	
	B	90MM	
	C	130MM	
	D	135MM	
	MATERIALE raw material	ALLUMINIO aluminium	

ACCESSORI / accessories

ACCESSORI Accessories	DESCRIZIONE Description
TK001 TK002 TK004	CONTRAPPESI PER MANUBRI handlebar ends

APPLICAZIONI / application list - HB173

CC	MODELLO Model	ANNI / years DA From	A To	TELAIO chassis
APRILIA				
ALL	Tuono	2002	2016	
750	SHIVER	2007	2016	
BENELLI				
ALL	TNT	2004	2014	
BIMOTA				
1100	DELIRIO	2011	2013	

CC	MODELLO Model	ANNI / years DA From	A To	TELAIO chassis
MOTO GUZZI				
1000	V11 CAFFE'	2003	2006	
MOTO MORINI				
1200	CORSARO 1200	2006	2016	
1200	CORSARO 1200 VELOCE	2006	2016	

RIALZI / risers



CODICE Reference	DESCRIZIONE Description	CARATTERISTICHE TECNICHE Technical details	COLORI Colours
RK121	RIALZI + 10MM PER MANUBRIO Ø 22MM + 10mm-risers for handlebars Ø 22mm	MATERIALE raw material: CNC ERGAL 7075	N NERO / black S ARGENTO / silver
RK122	RIALZI + 20MM PER MANUBRIO Ø 22MM + 20mm-risers for handlebars Ø 22mm	MATERIALE raw material: CNC ERGAL 7075	N NERO / black S ARGENTO / silver

KIT CAVALLOTTI / riser kit



RK119-RK120



129X

CODICE Reference	DESCRIZIONE Description	CARATTERISTICHE TECNICHE Technical details	COLORI Colours
RK119	KIT CAVALLOTTI + 40MM PER MANUBRIO Ø 28MM + 40mm-riser kit for handlebars Ø 28mm	MATERIALE raw material: CNC ERGAL 7075	N NERO / black S ARGENTO / silver
RK120	KIT CAVALLOTTI + 60MM PER MANUBRIO Ø 28MM + 60mm-riser kit for handlebars Ø 28mm	MATERIALE raw material: CNC ERGAL 7075	N NERO / black S ARGENTO / silver
129X	KIT CAVALLOTTI + 22MM PER MANUBRIO Ø 22MM + 22mm-riser kit for handlebars Ø 22mm	MATERIALE raw material: AL 6061T6	N NERO / black

STREET RACING

CAVALLOTTI / risers

KIT CAVALLOTTI DI TRASFORMAZIONE / transformation riser kit



CODICE Reference	DESCRIZIONE Description	CARATTERISTICHE TECNICHE Technical details	COLORI Colours
RK118	**KIT CAVALLOTTI DI TRASFORMAZIONE MANUBRIO Ø DA 22MM A 28MM** transformation riser-kit for handlebar Ø from 22mm to 28mm	**MATERIALE** raw material — **LEGA 6082** 6082 alloy	**N** **NERO** / black **S** **ARGENTO** / silver
128X	**KIT CAVALLOTTI DI TRASFORMAZIONE + 24MM MANUBRIO Ø DA 22MM A 28,5MM** + 24mm transformation riser-kit for handlebar Ø from 22mm to 28,5mm	**MATERIALE** raw material — **AL 6061T6**	**N** **NERO** / black **S** **ARGENTO** / silver
RK123	**KIT CAVALLOTTI DI TRASFORMAZIONE + 10MM Ø MANUBRIO DA 28MM A 28,5MM** + 10mm transformation riser-kit handlebar Ø from 28mm to 28,5mm	**MATERIALE** raw material — **CNC ERGAL 7075**	**N** **NERO** / black **S** **ARGENTO** / silver
RK124	**KIT CAVALLOTTI DI TRASFORMAZIONE + 20MM Ø MANUBRIO DA 28MM A 28,5MM** + 20mm transformation riser-kit handlebar Ø from 28mm to 28,5mm	**MATERIALE** raw material — **CNC ERGAL 7075**	**N** **NERO** / black **S** **ARGENTO** / silver

ACCOSSATO

STREET RACING

COMANDI GAS / throttle control



CODICE Reference	DESCRIZIONE Description	CARATTERISTICHE TECNICHE Technical details		COLORE Colour
TC005	**COMANDO GAS VELOCITÁ MONOCAVO** single-cable throttle control	**CORSA** / stroke (**corsa** / stroke 36mm)	**MAX 82°** (**rotazione** /rotation **66°**)	**N** ■ **NERO** / black
		MANOPOLE GR001N GR001N racing grips	**INCLUSE** included	
		APPLICAZIONI suitable for	**RACING 125**	



CODICE Reference	DESCRIZIONE Description	CARATTERISTICHE TECNICHE Technical details		COLORE Colour
TC006	**COMANDO GAS MONOCAVO** single-cable throttle control	**MANOPOLE GR001N** GR001N racing grips	**INCLUSE** included	**N** ■ **NERO** / black
		APPLICAZIONI suitable for	**ON-ROAD BIKES SUPER BIKE**	


MICHELIN
aprilia
73
#GRAZIEEMILIANO

ACCOSSATO



TUBI FRENO
BRAKE LINES

TUBI FRENO BRAKE LINES

ACCOSSATO

I TUBI FRENO ACCOSSATO SONO DISPONIBILI IN 20 COLORI ABBINABILI A 6 DIVERSE COLORAZIONI DEI RACCORDI

The Accossato brake lines are available in 20 colours to combine with 6 different colours of sittings



NERO
black



NERO CARBONE
carbon look



ARGENTO
silver



BLU YAMAHA
yamaha blue



ROSSO
red



ROSSO NEON
red trans



ROSA
pink



VIOLA
purple



ARANCIO
orange



GIALLO
yellow



BIANCO
white



TRASPARENTE (TRECCIA A VISTA)
clear (twist in view)



NERO NEON
neon black



VERDE NEON
neon green



ORO NEON
neon gold



ORO
gold



BLU DENIM
denim blue



ARANCIO NEON
neon orange



GIALLO NEON
neon yellow



VERDE KAWASAKI
kawasaki green

RACCORDI IN ACCIAIO VERNICIATI / steel painted fittings



NERO / black



BLU / blue



ARGENTO / silver



ROSSO / red



VERDE / green

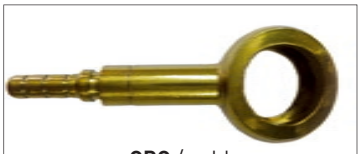

ORO / gold

TUBI FRENO BRAKE LINES

NELLE COMPETIZIONI AD ALTO LIVELLO, LA PRECISIONE NEL CONTROLLO DELLA FRENATA È DI MASSIMA IMPORTANZA IN QUALUNQUE FRANGENTE.
LA PERFETTA PERCEZIONE DELLA PRESSIONE ESERCITATA E DELLA CONSEGUENTE RISPOSTA FRENANTE CONFERISCONO LA SICUREZZA NECESSARIA PER AFFRONTARE I TRACCIATI PIÙ IMPEGNATIVI IN STRADA E SU PISTA. I KIT TUBI FRENO ACCOSSATO SONO ASSEMBLATI SECONDO RIGOROSE SPECIFICHE TECNICHE, ESSENZIALI A GARANTIRE SEMPRE IL MASSIMO DELLE PRESTAZIONI, IN QUALSIASI SITUAZIONE E PER OGNI TIPO DI UTILIZZO. I TUBI FRENO ACCOSSATO VANTANO INOLTRE L'OMOLOGAZIONE DEKRA 201126026. REALIZZATI IN ACCIAIO INTRECCIATO, DOTATI DI ANIMA IN TEFLON E DI RACCORDI IN ACCIAIO INOX, I NOSTRI KIT TUBI FRENO ELIMINANO L'EFFETTO GOMMOSO DELL'IMPIANTO FRENANTE CHE SI PERCEPISCE NORMALMENTE IN CASO DI UTILIZZO INTENSIVO PROLUNGATO. IN QUESTO MODO, SI MANTENGONO INALTERATE TUTTA L'EFFICIENZA E LA MASSIMA SICUREZZA NELLE PRESTAZIONI CHE IL PRODOTTO È IN GRADO DI GARANTIRE, SPECIALMENTE NEI FRANGENTI DI MASSIMA NECESSITÀ.
L'IMPIEGO DELL'ACCIAIO INOX COME MATERIALE DI FABBRICAZIONE DELLA TRECCIA METALLICA INTERNA E DEI RACCORDI GARANTISCE UN'INCOMPARABILE RESISTENZA SIA ALLA CORROSIONE CHE ALL'ABRASIONE DEL PRODOTTO.
I KIT TUBI FRENO ACCOSSATO SONO FORNITI DI GUAINA DISPONIBILE IN BEN 20 COLORI: NERO, NERO CARBONE, NERO NEON, ARGENTO, ROSSO, ROSSO NEON, ROSA, VERDE KAWASAKI, VERDE NEON, VIOLA, ARANCIONE, ARANCIONE NEON, GIALLO, GIALLO NEON, BIANCO, TRASPARENTE, BLU DENIM, BLU YAMAHA, ORO, ORO NEON. LADDOVE IL KIT LO PREVEDA, SONO DISPONIBILI RACCORDI VERNICIATI IN 6 DIVERSE COLORAZIONI: NERO, BLU, ARGENTO, ROSSO, VERDE, ORO.
ORDINARE UN KIT TUBI FRENO ACCOSSATO È SEMPLICE E VELOCE: CERCATE LA MARCA, IL MODELLO E L'ANNO DELLA VOSTRA APPLICAZIONE NELLE PAGINE A SEGUIRE.
I KIT TUBI FRENO ACCOSSATO SONO DISPONIBILI IN 4 CONFIGURAZIONI:

- ❶ **S - STANDARD: STESSO SVILUPPO DEI TUBI COME DA CONFIGURAZIONE ORIGINALE;**
- ❷ **F - DIRETTO: OGNI TUBO CONNETTE DIRETTAMENTE LA POMPA FRENI A CIASCUNA PINZA SIA ANTERIORE CHE POSTERIORE;**
- ❸ **O - SOPRA IL PARAFANGO: IL TUBO ANTERIORE CONNETTE LA POMPA FRENI ALLA PINZA ANTERIORE DESTRA MENTRE UN ALTRO TUBO COLLEGA LA PINZA DESTRA A QUELLA SINISTRA PASSANDO SOPRA IL PARAFANGO;**
- ❹ **C - FRIZIONE: STESSO SVILUPPO DEI TUBI FRIZIONE, COME DA CONFIGURAZIONE ORIGINALE.**

I KIT TUBI FRENO ACCOSSATO UTILIZZANO RACCORDI IN ACCIAIO E SONO DOTATI DI TUTTI I COMPONENTI NECESSARI AL MONTAGGIO, COME AD ESEMPIO LE VITI DI RACCORDO IN ACCIAIO E LE RONDELLE DI RAME; SONO INOLTRE ACCOMPAGNATI DAL MANUALE D'ISTRUZIONI E DA ADESIVI. LADDOVE IL KIT LO CONSENTA, ACCOSSATO OFFRE ANCHE UNA LINEA DI RACCORDI ACCIAIO INOX COLORATI: SOTTOPOSTI AL TRATTAMENTO DI BAGNO GALVANICO, QUESTI OCCHIELLI VANTANO COLORAZIONE UNIFORME, TONALITÀ BRILLANTI ED ECCELLENTE PROTEZIONE DAI RAGGI ULTRAVIOLETTI CHE ROVINANO INVECE I RACCORDI REALIZZATI IN ALLUMINIO O IN ERGAL.
TUTTI I KIT TUBI FRENO SONO FORNITI COMPLETI DI OGNI PARTE.

Braking precision is very important during any high level competition.

To fully perceive all the pression exercised and the way brake lines react to this can really give the pilot confidence enough to cope with the most challanging tracks and streets.

Accossato brake line kits are assembled according to rigid technical specificities, essential to ensure topmost performances.
This is why our brake line kits are approved by DEKRA 201126026 certification.

Steel made, provided with a fluoropolymer central core and stainless steel fittings, our brake lines are provided from fading effect taking place in case of prolonged intensive use.
Al this ensures an excellent resistance against abrasion and corrosion.
Our fittings give a good connection, are lighter and safer than our competitors'. We do not have individual components prices, because we only sell them as a kit (front and rear).

Accossato brake line kits are available in 20 colours:
black, carbon look, neon black, silver, red, neon red, pink, Kawasaki green, neon green, purple, orange, neon orange, yellow, neon yellow, white, clear, denim blue, Yamaha blue, gold, neon gold.
UV-resistant, fittings are available in 6 colours: black, blue, silver, red, green and gold.
Purchaising a set of brake lines is very easy: find the brand, the model and the year on the following pages.

Brake lines are available in 4 different layouts:

- ❶ S - Standard: same brake lines as for the original configuration;
- ❷ F - Full-length: every brake lines connect the master cylinder to each brake caliper, qfront and rear;
- ❸ O - Over the mudguard: the front brake line connects the master cylinder to the right rear brake caliper, while another brake line connects the right brake caliper to the left one, by passing through the mudguard;
- ❹ C - Clutch: same clutchline as the original layout.

The brake lines kits can be mounted as the customer prefers, with stainless steel or titanium fittings and they are supplied with all the needed parts for the assembly, such as screws and copper washer. Warranty card and stickers are also supplied.

Brake line kits are supplied with all components.

TUBI FRENO BRAKE LINES

AGGIORNATO A DICEMBRE 2016 / last updated on December 2016 **www.accossato.com/accessori-moto/tubi-freno.html**

INDICE / index

INDICE LINEA TUBI FRENO
brake lines index

ANALITICO TUBI FRENO
brake lines application list: **201 - 237**

TUBI FRENO PERSONALIZZATI
customized brake lines: **237**

TUBI MODULARI
modular hoses: **238**

EASY MODULAR SYSTEM: **239**

ACCOSSATO

TUBI FRENO BRAKE LINES

AGGIORNATO A DICEMBRE 2016 / last updated on December 2016 **www.accossato.com/accessori-moto/tubi-freno.html**

I KIT TUBI FRENO ACCOSSATO SONO FORNITI COMPLETI DI PARTE ANTERIORE E POSTERIORE
Accossato brake line kits encompass front&rear components

MARCA Brand	CC	MODELLO Model	ANNI / Years DA From	ANNI / Years A To	NR. TUBI Hoses N°	LAYOUT	CODICE Reference
APRILIA	50	50 SX MOTARD	2008	2010	2	S	AGF0086
APRILIA	50	RS50	1993	1998	2	S	AGF0025
APRILIA	50	RS50	1999	2006	2	S	AGF0024
APRILIA	50	RS50	2004	2010	2	S	AGF0085
APRILIA	50	RX50	1999	2007	2	S	AGF0058
APRILIA	50	SR50	1999	2006	2	S	AGF0068
APRILIA	125	125 RED ROSE CUSTOM	1988	1994	2	S	AGF0080
APRILIA	125	AF1 125 SINTESI	1986	1992	2	S	AGF0090
APRILIA	125	MX125	2006	2008	2	S	AGF0084
APRILIA	125	PEGASO 125	1992	1995	2	S	AGF0001
APRILIA	125	RS125	2006	2010	2	S	AGF0087
APRILIA	125	RS125	1999	2005	2	S	AGF0006
APRILIA	125	RS125 AF1-125	1991	1993	2	S	AGF0005
APRILIA	125	RS125 EXTREMA	1993	1998	2	S	AGF0012
APRILIA	125	TUONO 125	2001	2004	1	F	AGF0072
APRILIA	250	RS250	1994	1997	4	S	AGF0014
APRILIA	250	RS250	1994	1997	3	F	AGF0015
APRILIA	250	RS250	1998	2004	4	S	AGF0023
APRILIA	250	RS250	1998	2004	3	F	AGF0073
APRILIA	450	SXV450 / SXV550 SUPER MOTO	2005	2007	2	F	AGF0074
APRILIA	650	MOTO 6.5	1995	1997	2	S	AGF0069
APRILIA	650	PEGASO 650	1995	1996	2	S	AGF0083
APRILIA	650	PEGASO 650 ROTAX	1999	2005	2	S	AGF0075
APRILIA	650	PEGASO 650 STRADA	2006	2010	2	S	AGF0076
APRILIA	650	PEGASO 650 TRAIL	2005	2009	2	S	AGF0063
APRILIA	1000	ETV1000 CAPONORD	2001	2004	4	S	AGF0081
APRILIA	1000	ETV1000 CAPONORD	2001	2004	3	F	AGF0082
APRILIA	1000	ETV1000 CAPONORD	2001	2004	1	C	AGC0081
APRILIA	1000	FUTURA RST 1000	2001	2004	4	S	AGF0070
APRILIA	1000	FUTURA RST 1000	2001	2004	3	F	AGF0071
APRILIA	1000	FUTURA RST 1000	2001	2004	1	C	AGC0070
APRILIA	1000	RSV MILLE 1000	1998	2000	4	S	AGF0032
APRILIA	1000	RSV MILLE 1000	1998	2000	3	F	AGF0033
APRILIA	1000	RSV MILLE 1000	2001	2005	3	F	AGF0056
APRILIA	1000	RSV MILLE 1000	2001	2005	4	S	AGF0057
APRILIA	1000	RSV MILLE 1000	2005	2010	4	S	AGF0078
APRILIA	1000	RSV MILLE 1000	2005	2010	3	F	AGF0079
APRILIA	1000	RSV4	2008	2010	5	S	AGF0088
APRILIA	1000	RSV4	2008	2010	3	F	AGF0089
APRILIA	1000	RSV-R MILLE 1000	1999	2000	4	S	AGF0038
APRILIA	1000	RSV-R MILLE 1000	1999	2000	3	F	AGF0039
APRILIA	1000	RSV-R MILLE 1000	2001	2005	3	F	AGF0064
APRILIA	1000	RSV-R MILLE 1000	2001	2005	4	S	AGF0065
APRILIA	1000	RSV-SP MILLE 1000	1999	2000	4	S	AGF0042
APRILIA	1000	RSV-SP MILLE 1000	1999	2000	3	F	AGF0043
APRILIA	1000	SL1000 FALCO	1999	2005	4	S	AGF0046
APRILIA	1000	SL1000 FALCO	1999	2005	3	F	AGF0047
APRILIA	1000	TUONO 1000	2002	2005	3	F	AGF0067
APRILIA	1000	TUONO 1000	2006	2011	1	C	AGC0092
APRILIA	1000	TUONO 1000	2006	2011	2	F	AGF0092
APRILIA	1000	TUONO 1000	2002	2005	1	C	AGC0066
APRILIA	1000	TUONO 1000	2002	2005	4	S	AGF0066
APRILIA	1000	TUONO 1000	2006	2011	3	S	AGF0093
APRILIA	1000	TUONO 1000 FACTORY R	2007	2009	2	F	AGF0091
APRILLIA	1000	RSV 1000 MILLE	1999	2002	1	C	AGC0032
APRILLIA	1000	RSV 1000 MILLE	2004	2007	1	C	AGC0078
APRILLIA	1000	SL1000 FALCO	1999	2005	1	C	AGC0046
BENELLI	125	ADIVA 125	2000	2003	1	S	AGF0101
BENELLI	354	354 SPORT	1979		4		AGF0110
BENELLI	500	504 SPORT	1979	1981	4	S	AGF0100

TUBI FRENO BRAKE LINES

AGGIORNATO A DICEMBRE 2016 / last updated on December 2016 **www.accossato.com/accessori-moto/tubi-freno.html**

I KIT TUBI FRENO ACCOSSATO SONO FORNITI COMPLETI DI PARTE ANTERIORE E POSTERIORE
Accossato brake line kits encompass front&rear components

MARCA Brand	CC	MODELLO Model	ANNI / Years DA From	ANNI / Years A To	NR. TUBI Hoses N°	LAYOUT	CODICE Reference
BENELLI	750	750 SEI	1972	1978	3	S	AGF0104
BENELLI	900	900 SEI - 7 LINE KIT	1979	1989	5	S	AGF0109
BENELLI		TNT	2004	2006	4	S	AGF0102
BENELLI		TNT	2004	2006	3	F	AGF0103
BENELLI		TORNADO RS BREMBO CAILPERS	2003	2011	4	S	AGF0107
BENELLI		TORNADO RS BREMBO CAILPERS	2003	2011	3	F	AGF0108
BENELLI		TORNADO TRE / LE	2003	2006	4	S	AGF0105
BENELLI		TORNADO TRE / LE	2003	2006	3	F	AGF0106
BETA	250	EVO 250	2009	2011	1	S	AGF0201
BETA		MOTO CROSS	1998	2000	2	S	AGF0200
BETA		MOTO CROSS			1	C	AGC0201
BIMOTA	1000	KB1	1977	1979	4	S	AGF0300
BIMOTA	1000	YB8	1990	1994	4	S	AGF0302
BIMOTA	1100	SB6	1991	1999	4	S	AGF0301
BIMOTA		YB8	1990	1994	1	C	AGC0302
BMW	450	R45	1979	1980	2	S	AGF0529
BMW	450	R45 MONODISCO	1981	1985	1	S	AGF0531
BMW	650	F650	1994	2000	2	S	AGF0400
BMW	650	F650 GS	1997	2002	1	S	AGF0574
BMW	650	F650 GSGD GRANADA DAKAR	2000	2005	2	S	AGF0583
BMW	650	F650 PARIS DAKAR ABS	2002	2003	3	S	AGF0606
BMW	650	R65 BIDISCO	1978	1984	3	S	AGF0536
BMW	650	R65	1985	1986	1	S	AGF0543
BMW	650	R65 LS	1981	1985	3	S	AGF0545
BMW	650	R65 REPLACING BUNDY	1980	1981	3	S	AGF0550
BMW	650	R65 REPLACING BUNDY	1981	1984	3	S	AGF0551
BMW	650	R65 REPLACING BUNDY	1985	1986	3	S	AGF0552
BMW	750	K75 C ROADSTER	1985	1988	3	S	AGF0440
BMW	750	K75 C ROADSTER HIGH BAR FAIRING	1986		3	S	AGF0444
BMW	750	K75 RT TOURER	1991	1996	3	S	AGF0445
BMW	750	K75 S SPORTS HALF FAIRING	1986	1989	4	S	AGF0451
BMW	750	K75 S SPORTS HALF FAIRING (NON ABS)	1990		4	S	AGF0455
BMW	750	K75-S SPORTS HALF FAIRING (ABS)	1990	1996	4	S	AGF0456
BMW	750	R75	1973	1976	2	S	AGF0553
BMW	750	R75 ATE CALIPERS	1973	1976	2	S	AGF0554
BMW	800	F800 ST - NON ABS	2007	2012	4	S	AGF0614
BMW	800	F800S	2006	2007	4	S	AGF0611
BMW	800	F800S	2006	2007	3	F	AGF0612
BMW	800	R80	1984	1990	3	S	AGF0556
BMW	800	R80 GS	1980	1981	1	S	AGF0563
BMW	800	R80 GS	1982	1986	1	S	AGF0565
BMW	800	R80 GS	1987	1990	1	S	AGF0564
BMW	800	R80 RT	1980	1984	2	S	AGF0568
BMW	800	R80 RT	1985	1986	2	S	AGF0567
BMW	800	R80 ST	1982	1984	1	S	AGF0569
BMW	900	R90 S SINGLE DISC PRE BREMBO	1973	1976	1	S	AGF0571
BMW	900	R90 S TWIN DISC PRE BREMBO	1973	1976	2	S	AGF0572
BMW	900	RS900	1973	1976	3	S	AGF0573
BMW	1000	K100 LT TOURER NON ABS	1987	1988	3	S	AGF0407
BMW	1000	K100 RG	1991		1	S	AGF0409
BMW	1000	K100 ROADSTER	1983	1987	4	S	AGF0410
BMW	1000	K100 RS 8 VALVE ABS	1988	1990	4	S	AGF0603
BMW	1000	K100 RS SPORTS	1983	1987	4	S	AGF0415
BMW	1000	K100 RS SPORTS (NON ABS)	1988	1989	4	S	AGF0420
BMW	1000	K100 RT TOURER	1984	1987	4	S	AGF0422
BMW	1000	K100 RT TOURER (NON ABS)	1988		4	S	AGF0426
BMW	1000	K100/K1100 RS 16 V ABS	1990	1997	6	S	AGF0601
BMW	1000	R100	1980	1984	3	S	AGF0463
BMW	1000	R100 CS	1980	1984	3	S	AGF0468
BMW	1000	R100 GS	1988	1990	1	S	AGF0473

TUBI FRENO BRAKE LINES

AGGIORNATO A DICEMBRE 2016 / last updated on December 2016 **www.accossato.com/accessori-moto/tubi-freno.html**

I KIT TUBI FRENO ACCOSSATO SONO FORNITI COMPLETI DI PARTE ANTERIORE E POSTERIORE
Accossato brake line kits encompass front&rear components

MARCA Brand	CC	MODELLO Model	ANNI / Years DA From	ANNI / Years A To	NR. TUBI Hoses N°	LAYOUT	CODICE Reference
BMW	1000	R100 GS	1991	1994	1	S	AGF0476
BMW	1000	R100 RG			1	S	AGF0480
BMW	1000	R100 RS	1977	1978	3	S	AGF0608
BMW	1000	R100 RS	1979	1981	3	F	AGF0494
BMW	1000	R100 RS	1982	1984	4	S	AGF0481
BMW	1000	R100 RS	1987	1993	3	S	AGF0485
BMW	1000	R100 RS ATE CALIPERS	1981		3	S	AGF0492
BMW	1000	R100 RS BREMBO FLEXIBLES	1983		4	S	AGF0493
BMW	1000	R100 RT	1981	1984	4	S	AGF0500
BMW	1000	R100 T	1979		2	S	AGF0504
BMW	1000	R100/7	1978		2	S	AGF0505
BMW	1000	S1000RR	2010	2013	4	S	AGF0616
BMW	1000	S1000RR	2010	2013	3	F	AGF0618
BMW	1000	R100 RS	1982	1984	3	S	AGF0497
BMW	1000	S1000RR HP4 (K42) NO ABS	2013	2014	4	S	AGA0042
BMW	1100	K1100 LT ABS I TOURER	1992	1994	6	S	AGF0605
BMW	1100	K1100 LT ABS II TOURER	1994	1996	6	S	AGF0427
BMW	1100	K1100 RS SPORTS NON ABS	1992	1993	3	S	AGF0430
BMW	1100	R1100 GS ABS	1994	2000	5	S	AGF0506
BMW	1100	R1100 GS NON ABS VERSION	1993	1995	4	S	AGF0580
BMW	1100	R1100 GS NON ABS VERSION	1996	1997	4	S	AGF0609
BMW	1100	R1100 GS NON ABS VERSION	1998	1999	4	S	AGF0513
BMW	1100	R1100 R ABS	1996	2001	5	S	AGF0610
BMW	1100	R1100 RS ABS	1993	2002	5	S	AGF0619
BMW	1100	R1100 RT ABS	1993	2002	5	S	AGF0604
BMW	1100	R1100 S NON ABS	1998	2000	3	O	AGF0519
BMW	1100	R1100 S NON ABS EVO BRAKES	2001	2005	3	F	AGF0522
BMW	1100	R1100S BOXER CUP	2003	2005	3	F	AGF0615
BMW	1200	K1200 RS ABS	1997	2000	6	S	AGF0436
BMW	1200	R1200C	1997	2004	5	S	AGF0613
BMW	1200	R1200 GS ADVENTURER	2009		1	C	AGC0411
BMW		K1 SPORT ABS 1	1989	1990	6	S	AGF0599
BMW		K1 SPORT ABS 2	1991	1993	6	S	AGF0600
BMW		R76	1973	1976	2	S	AGF0555
BMW		R87	1979		2	S	AGF0570
BOMBARDIER	650	QUAD : DS650	2000	2003	3	S	AGF0650
BUELL	900	XB9SX	2004	2009	2	S	AGF0713
BUELL	1125	CR1125	2009	2011	1	S	AGF0714
BUELL	1125	CR1125	2009	2011	1	C	AGC0714
BUELL	1200	M2 CYCLONE	1997	1998	2	S	AGF0700
BUELL	1200	S1 LIGHTNING	1997	1998	3	S	AGF0702
BUELL	1200	S1 LIGHTNING STRIKE	1997	1998	2	S	AGF0704
BUELL	1200	S1 WHITE LIGHTNING	1997	1998	3	S	AGF0706
BUELL	1200	X1 LIGHTENING	1999	2001	2	S	AGF0708
BUELL	1200	XB12R	2003	2007	2	S	AGF0712
BUELL	1200	XB12S	2003	2007	2	S	AGF0711
BUELL	1200	XB12SS LONG 8 PISTON CALIPER	2010	-	1	S	AGF0715
BULTACO		MOTO CROSS	2000	2001	2	S	AGF0750
BULTACO		MOTO CROSS			1	C	AGC0752
CAGIVA	50	PRIMA 50	1992	1995	2	S	AGF0827
CAGIVA	125	BLUES 125	1991	1993	2	S	AGF0844
CAGIVA	125	PLANET 125	1998	2006	2	S	AGF0843
CAGIVA	125	SUPER CITY 125	1991	2006	2	S	AGF0842
CAGIVA	250	250 ALA BLU TRAIL	1983	1984	1	S	AGF0800
CAGIVA	500	CANYON 500 TRAIL	1998	2001	1	S	AGF0814
CAGIVA	600	CANYON 600	1995	1997	2	S	AGF0845
CAGIVA	650	650 ALAZZURA	1985	1988	4	S	AGF0802
CAGIVA	650	650 ALAZZURA	1985	1988	3	F	AGF0839
CAGIVA	650	650 ALAZZURRA	1985	1988	1	C	AGC0819
CAGIVA	750	750 ELEFANT	1994	1998	2	S	AGF0835

TUBI FRENO BRAKE LINES

AGGIORNATO A DICEMBRE 2016 / last updated on December 2016 **www.accossato.com/accessori-moto/tubi-freno.html**

I KIT TUBI FRENO ACCOSSATO SONO FORNITI COMPLETI DI PARTE ANTERIORE E POSTERIORE
Accossato brake line kits encompass front&rear components

MARCA Brand	CC	MODELLO Model	ANNI / Years DA From	A To	NR. TUBI Hoses N°	LAYOUT	CODICE Reference
CAGIVA	750	750 ELEFANT	1994	1998	1	C	AGC0835
CAGIVA	900	900 ELEFANT	1995	2000	4	S	AGF0809
CAGIVA	900	900 ELEFANT	1995	2000	3	F	AGF0840
CAGIVA	900	900 IE ELEFANT	1991	2000	2	S	AGF0819
CAGIVA	900	900 IE ELEPHANT	1991	2000	1	C	AGC0818
CAGIVA		MITO	1991	1991	2	S	AGF0838
CAGIVA		MITO EVOLUTION	2000	2001	2	S	AGF0837
CAGIVA		MITO MK1	1992	1999	2	S	AGF0818
CAGIVA		RAPTOR	2000	2001	4	S	AGF0831
CAGIVA		RAPTOR	2000	2001	3	F	AGF0832
CCM	644	644 DUAL SPORT	2003	2005	2	S	AGF0881
CCM		R30	2003	2005	2	S	AGF0880
DUCATI	250	250 DESMO	1975		1	S	AGF0900
DUCATI	350	350 DESMO	1975		1	S	AGF0901
DUCATI	400	400 SS SPORTS	1991	1993	1	S	AGF0902
DUCATI	400	M400 MONSTER	1994	2002	2	S	AGF1176
DUCATI	500	500 PANTAH (ALTERNATIVE)			3	S	AGF1096
DUCATI	500	500 SL PANTAH	1980	1984	4	S	AGF0905
DUCATI	600	600 PANTAH	1980	1985	1	C	AGC0910
DUCATI	600	600 SL PANTAH	1980	1984	4	S	AGF0910
DUCATI	600	600 SS	1994	1998	2	S	AGF1086
DUCATI	600	600 SS	1993	2002	1	C	AGC1086
DUCATI	600	600 TL PANTAH	1984	1985	4	S	AGF0915
DUCATI	600	M600 MONSTER	1994	1999	2	S	AGF1043
DUCATI	600	M600 MONSTER DARK	1998	2001	2	S	AGF1044
DUCATI	600	M600 MONSTER DARK	1998	2001	1	C	AGC1044
DUCATI	620	620 SPORT	2003	2005	3	F	AGF1102
DUCATI	620	M620 MONSTER	2003	2006	2	S	AGF1177
DUCATI	650	650 GT PANTAH			4	S	AGF0917
DUCATI	650	INDIANA 650	1986	1987	2	S	AGF1041
DUCATI	695	695 MONSTER	2007	2010	3	F	AGF1182
DUCATI	695	695 MONSTER	2007	2010	4	S	AGF1183
DUCATI	695	695 MONSTER	2007	2010	3	O	AGF1196
DUCATI	695	695 MONSTER	2007	2010	1	C	AGC1183
DUCATI	696	MONSTER 696	2010	2013	3	O	AGF1223
DUCATI	748	749	2003	2005	3	O	AGF1100
DUCATI	748	749	2003	2005	4	S	AGF1170
DUCATI	748	748 BIPOSTA / SPS	1999	2003	3	F	AGF0926
DUCATI	748	748 BIPOSTA / STRADA	1995	1998	4	S	AGF0918
DUCATI	748	748 BIPOSTA / STRADA	1995	1998	3	F	AGF0919
DUCATI	748	748R	1999	2002	3	F	AGF1171
DUCATI	748	748R	1999	2002	1	C	AGC1171
DUCATI	748	748R	2000	2002	1	C	AGC1172
DUCATI	749	749	2003	2005	1	C	AGC1100
DUCATI	750	750 F1 MK II	1985	1988	4	S	AGF0951
DUCATI	750	750 F1 MK II	1985	1988	1	C	AGC0951
DUCATI	750	750 F1 MONTJUIC	1987	1988	4	S	AGF0955
DUCATI	750	750 PASO	1986	1994	4	S	AGF0956
DUCATI	750	750 PASO	1986	1994	3	F	AGF1172
DUCATI	750	750 PASO	1986	1994	1	C	AGC0956
DUCATI	750	750 SPORT	1988	1990	3	S	AGF0961
DUCATI	750	750 SPORT	2003	2004	3	F	AGF1107
DUCATI	750	750 SS	1991	1993	2	S	AGF1166
DUCATI	750	750 SS	1994	1997	3	F	AGF1165
DUCATI	750	750 SS	1998	2002	3	F	AGF1144
DUCATI	750	750 SS	2003	2004	3	F	AGF1106
DUCATI	750	750 SS	1993	2002	1	C	AGC1165
DUCATI	750	M750 MONSTER MONODISCO	1994	2002	2	S	AGF1130
DUCATI	750	750 SPORT	1988	1990	1	C	AGC0961
DUCATI	800	800 SPORT	2003	2004	3	F	AGF1109

TUBI FRENO BRAKE LINES

AGGIORNATO A DICEMBRE 2016 / last updated on December 2016 **www.accossato.com/accessori-moto/tubi-freno.html**

I KIT TUBI FRENO ACCOSSATO SONO FORNITI COMPLETI DI PARTE ANTERIORE E POSTERIORE
Accossato brake line kits encompass front&rear components

MARCA Brand	CC	MODELLO Model	ANNI / Years DA From	ANNI / Years A To	NR. TUBI Hoses N°	LAYOUT	CODICE Reference
DUCATI	800	800 SS	2003	2004	3	F	AGF1108
DUCATI	800	800 SS	2003	2004	4	S	AGF1210
DUCATI	800	S2R 800	2004	2008	4	S	AGF1184
DUCATI	800	S2R 800	2007	2008	3	F	AGF1185
DUCATI	821	HYPERMOTARD 821 (NO ABS)	2013	2015	3	F	AGA0030
DUCATI	821	HYPERMOTARD 821	2013	2015	5	S	AGA0029
DUCATI	848	848	2008	2009	3	O	AGF1205
DUCATI	848	848	2008	2009	3	F	AGF1206
DUCATI	848	848 / 848 EVO	2008	2013	1	C	AGC1206
DUCATI	848	848 EVO	2010	2013	3	O	AGF1214
DUCATI	848	848 EVO	2010	2013	3	F	AGF1215
DUCATI	848	848 STREETFIGHTER	2012	2013	3	F	AGF1221
DUCATI	848	848 STREETFIGHTER	2012	2013	3	O	AGF1222
DUCATI	848	848 STREETFIGHTER	2012	2013	1	C	AGC1221
DUCATI	851	851	1987	1989	1	C	AGC0967
DUCATI	851	851 SP3	1992	1993	3	S	AGF0967
DUCATI	851	851 STRADA	1992	1993	3	S	AGF0968
DUCATI	851	851 STRADA	1987	1989	4	S	AGF0966
DUCATI	860	860 DARMAH	1982		5	S	AGF0969
DUCATI	860	860 GT	1974	1975	3	S	AGF0971
DUCATI	860	860 GTS	1976	1978	3	S	AGF0972
DUCATI	860	860 MHR	1981		4	S	AGF0973
DUCATI	888	888 STRADA	1992	1994	3	S	AGF1126
DUCATI	888	888 SP2	1980		4	S	AGF1217
DUCATI	888	888 STRADA	1992	1994	1	C	AGC1126
DUCATI	899	899 PANIGALE ABS	2014	2015	5	S	AGF1899
DUCATI	900	900 GTS	1976	1978	3	S	AGF1211
DUCATI	900	900 S2	1983	1984	4	S	AGF0981
DUCATI	900	900 S2	1985		4	S	AGF0982
DUCATI	900	900 SD DARMAH SUPERSPORT	1978		4	S	AGF1199
DUCATI	900	900 SD DARMAH SUPERSPORT	1980		5	S	AGF0979
DUCATI	900	900 SD DARMAH SUPERSPORT	1981		4	S	AGF0980
DUCATI	900	900 SL	1991	1993	3	F	AGF1160
DUCATI	900	900 SL	1991	2002	1	C	AGC1160
DUCATI	900	900 SL UNDERSLUNG CALIPER	1994	1997	3	F	AGF1157
DUCATI	900	900 SPORT	1989		4	S	AGF0986
DUCATI	900	900 SPORT	2003		3	F	AGF1105
DUCATI	900	900 SPORT	1989		1	C	AGC0986
DUCATI	900	900 SS	1978	1980	4	S	AGF0987
DUCATI	900	900 SS	1981	1990	4	S	AGF0989
DUCATI	900	900 SS	1991	1993	3	F	AGF1163
DUCATI	900	900 SS	1994	1997	3	F	AGF1153
DUCATI	900	900 SS	1998	2002	3	S	AGF1193
DUCATI	900	900 SS	2003		3	F	AGF1104
DUCATI	900	900 SS	1991	2002	1	C	AGC1163
DUCATI	900	900 SS DESMO	1974		4	S	AGF0991
DUCATI	900	900 SS MHR	1981		4	S	AGF1219
DUCATI	900	900 SUPERLIGHT II	1998	2002	3	F	AGF1149
DUCATI	900	900 SUPERLIGHT IV	2004	2005	3	F	AGF1220
DUCATI	900	M900	1993	2000	1	C	AGC1056
DUCATI	900	M900 MONSTER	1993	1999	4	S	AGF1056
DUCATI	900	M900 MONSTER	1993	1999	3	F	AGF1167
DUCATI	900	MHR900R	1983	1984	1	C	AGC1224
DUCATI	900	MHR900R	1983	1984	4	S	AGF1224
DUCATI	900	900 SS IE UNDERSLUNG REAR CALIPER	2002		3	F	AGF1120
DUCATI	900	900 SS IE UNDERSLUNG REAR CALIPER	2002		1	C	AGC1120
DUCATI	906	906 PASO	1986	1994	4	S	AGF1128
DUCATI	906	906 PASO	1986	1994	3	F	AGF1173
DUCATI	906	906 PASO	1986	1994	1	C	AGC1128
DUCATI	907	907 IE	1991	1994	4	S	AGF1000

TUBI FRENO BRAKE LINES

AGGIORNATO A DICEMBRE 2016 / last updated on December 2016 **www.accossato.com/accessori-moto/tubi-freno.html**

I KIT TUBI FRENO ACCOSSATO SONO FORNITI COMPLETI DI PARTE ANTERIORE E POSTERIORE
Accossato brake line kits encompass front&rear components

MARCA Brand	CC	MODELLO Model	ANNI / Years DA From	ANNI / Years A To	NR. TUBI Hoses N°	LAYOUT	CODICE Reference
DUCATI	916	916 BIP / STRADA / SP / SPS	1994	2000	1	C	AGC1004
DUCATI	916	916 BIPOSTA / SPS	1998	2000	3	F	AGF1014
DUCATI	916	916 BIPOSTA / STRADA / SP	1994	1997	4	S	AGF1004
DUCATI	916	916 BIPOSTA / STRADA / SP	1994	1997	3	F	AGF1009
DUCATI	916	MONSTER S4	2001	2007	4	S	AGF1168
DUCATI	916	MONSTER S4	2001	2007	3	F	AGF1169
DUCATI	916	ST4	1998	2002	4	S	AGF1082
DUCATI	916	ST4	1998	2002	3	F	AGF1095
DUCATI	944	ST2	1997	2002	4	S	AGF1072
DUCATI	944	ST2	1997	2002	3	F	AGF1077
DUCATI	996	996	1999	2000	3	F	AGF1175
DUCATI	996	996 BIPOSTA / SPS	1999	2002	3	F	AGF1174
DUCATI	996	996 BIPOSTA / SPS / R	1999	2002	1	C	AGC1174
DUCATI	996	996 R	2001	2001	3	F	AGF1216
DUCATI	996	MONSTER S4R	2005	2010	4	S	AGF1212
DUCATI	996	MONSTER S4R	2005	2010	3	F	AGF1213
DUCATI	998	998	2002	2004	3	F	AGF1164
DUCATI	998	998	2002	2004	1	C	AGC1164
DUCATI	998	999	2003	2006	3	O	AGF1099
DUCATI	998	998R	2002	2004	3	S	AGF1162
DUCATI	998	998S	2002	2004	3	F	AGF1207
DUCATI	999	999S	2003	2006	3	O	AGF1202
DUCATI	999	999S	2003	2006	3	F	AGF1203
DUCATI	999	999S	2003	2006	1	C	AGC1202
DUCATI	1000	1000 MHR MILLE	1985	1987	4	S	AGF1204
DUCATI	1000	1000 MHR MILLE	1979	1984	1	C	AGC1204
DUCATI	1000	1000 SS PAUL SMART REPLICA	2008	2009	3	S	AGF1194
DUCATI	1000	1000 SS PAUL SMART REPLICA	2008	2009	1	C	AGC1194
DUCATI	1000	1000DS MULTISTRADA	2003	2006	3	F	AGF1101
DUCATI	1000	1000DS MULTISTRADA	2003	2006	1	C	AGC1101
DUCATI	1000	GT1000	2007	2010	3	S	AGF1218
DUCATI	1000	S2R 1000	2007	2008	4	S	AGF1186
DUCATI	1000	S2R 1000	2007	2008	3	F	AGF1187
DUCATI	1098	1098	2007	2008	1	C	AGC1073
DUCATI	1098	1098 / S / TRICOLORE	2007	2008	3	O	AGF1192
DUCATI	1098	1098 / S / TRICOLORE	2007	2008	3	F	AGF1195
DUCATI	1098	STREETFIGHTER 1098	2010	2013	1	C	AGC1222
DUCATI	1100	HYPERMOTARD 1100	2007	2010	3	O	AGF1180
DUCATI	1100	HYPERMOTARD 1100	2007	2010	3	F	AGF1181
DUCATI	1100	HYPERMOTARD 1100	2007	2010	4	S	AGF1200
DUCATI	1100	HYPERMOTARD 1100 EVO SP	2010	2012	1	C	AGC1003
DUCATI	1100	MULTISTRADA 1100 / S	2007	2010	1	C	AGC1188
DUCATI	1100	HYPERMOTARD 1100 S	2008	2009	3	F	AGA0037
DUCATI	1198	1198	2009	2012	3	O	AGF1208
DUCATI	1198	1198	2009	2012	3	F	AGF1209
DUCATI		M400 / 600 / 620 / 750 MONSTER	1994	2002	1	C	AGC1176
DUCATI		MONSTER S4	2001	2007	1	C	AGC1168
DUCATI		MONSTER S4R	2005	2010	1	C	AGC1212
DUCATI		MONSTER S4S	2004	2007	4	S	AGF1197
DUCATI		MONSTER S4S	2004	2007	3	F	AGF1198
DUCATI		MONSTER S4S	2004	2007	1	C	AGC1197
DUCATI		S2R 1000 / 800	2004	2008	1	C	AGC1186
DUCATI		ST2 / ST4	1998	2004	1	C	AGC1072
ENFIELD	346	MACHISMO 350	2000	2005	1	S	AGF1280
GARINNI	125	GR125 ST	2010		2	S	AGF1290
GARINNI	125	GR125 T3	2010		1	S	AGF1292
GARINNI	150	GR150 ST	2010		2	S	AGF1291
GARINNI	150	GR150 TI	2010		1	S	AGF1293
GARINNI	250	GR250 T3	2010		2	S	AGF1294
GAS GAS	200	EC200 / EC250 / EC300 ENDURO	1996	2002	2	S	AGF1302

TUBI FRENO BRAKE LINES

AGGIORNATO A DICEMBRE 2016 / last updated on December 2016 **www.accossato.com/accessori-moto/tubi-freno.html**

I KIT TUBI FRENO ACCOSSATO SONO FORNITI COMPLETI DI PARTE ANTERIORE E POSTERIORE
Accossato brake line kits encompass front&rear components

MARCA Brand	CC	MODELLO Model	ANNI / Years DA From	ANNI / Years A To	NR. TUBI Hoses N°	LAYOUT	CODICE Reference
GAS GAS	250	EC250	1996	2002	2	S	AGF1303
GAS GAS	250	EC250	2008		2	S	AGF1304
GAS GAS	270	270 TXT	1999	2003	1	S	AGF1305
GAS GAS	300	EC300	1996	2002	2	S	AGF1301
GAS GAS		EC200 / EC250 / EC300	2000	2005	1	C	AGC1301
GAS GAS		MOTO CROSS	2000		2	S	AGF1300
GILERA	50	DNA 50	2000	2005	2	S	AGF1406
GILERA	50	GSM50	2000	2001	1	S	AGF1401
GILERA	125	DNA 125	2000	2005	2	S	AGF1407
GILERA	125	GFR125	1993	1994	1	S	AGF1400
GILERA	125	RUNNER FX125	1997	2001	2	S	AGF1402
GILERA	125	RUNNER VX125	2000	2005	1	S	AGF1409
GILERA	180	RUNNER FXR180	1998	2001	2	S	AGF1403
GILERA	180	RUNNER FXR180 SP	2000	2001	2	S	AGF1404
GILERA	200	RUNNER VXR200	2003	2010	2	S	AGF1410
GILERA	500	SATURNO 500	1990	1993	2	S	AGF1405
GILERA	600	NORD WEST 600	1991	1993	3	S	AGF1408
GUZZI	65	GT65	1988	1989	3	F	AGA0043
HARLEY DAVIDSON	350	MT350	1993	2000	2	S	AGF1505
HARLEY DAVIDSON	750	XG750 STREET 750	2016	2016	2	S	AGF1501
HARLEY DAVIDSON	883	883 HUGGER	2005	2011	1	S	AGF1821
HARLEY DAVIDSON	883	XL53C SPORTSTER CUSTOM 53	1998	2001	2	S	AGF1745
HARLEY DAVIDSON	883	XL883 NIGHTSTAR IRON	2008	2011	1	S	AGF1825
HARLEY DAVIDSON	883	XLH HUGGER 883	1987	2001	2	S	AGF1757
HARLEY DAVIDSON	883	XLH SPORTSTER 883	1985	2002	2	S	AGF1783
HARLEY DAVIDSON	883	XLH SPORTSTER 883	2003	2005	4	S	AGF1811
HARLEY DAVIDSON	883	XLH SPORTSTER 883R	2002	2005	3	F	AGF1812
HARLEY DAVIDSON	883	XLH SPORTSTER DE LUXE 883	1985	1992	2	S	AGF1800
HARLEY DAVIDSON	883	XLH SPORTSTER 883	2006	2011	3	S	AGF1809
HARLEY DAVIDSON	883	SPORTSTER CUSTOM XL53C	2002	2003	3	S	AGA0022
HARLEY DAVIDSON	1000	XLH 1000	1978	1985	3	S	AGF1749
HARLEY DAVIDSON	1000	XLS 1000	1984	1985	1	S	AGF1808
HARLEY DAVIDSON	1200	XL SPORTSTER 1200	2006	2007	2	S	AGF1816
HARLEY DAVIDSON	1200	XL1200 X-48	2010	2011	1	S	AGF1824
HARLEY DAVIDSON	1200	XL1200C SPORTSTER CUSTOM - STANDARD SPEC	1995	2001	2	S	AGF1735
HARLEY DAVIDSON	1200	XL1200C SPORTSTER CUSTOM - TWIN DISC CONVERSION	1995	2001	4	S	AGF1734
HARLEY DAVIDSON	1200	XL1200S SPORTSTER SPORT	1999	2001	4	S	AGF1742
HARLEY DAVIDSON	1200	XLH SPORTSTER 1200	1987	1996	2	S	AGF1772
HARLEY DAVIDSON	1200	XLH SPORTSTER 1200	1997	1999	2	S	AGF1780
HARLEY DAVIDSON	1200	XLH1200	2001	2003	3	S	AGF1826
HARLEY DAVIDSON	1200	XR1200	2008	2010	4	S	AGF1819
HARLEY DAVIDSON	1200	XR1200	2008	2010	3	O	AGF1502
HARLEY DAVIDSON	1340	FLHC ELECTRA GLIDE CLASSIC	1982	1984	5	S	AGF1500
HARLEY DAVIDSON	1340	FLHS ELECTRA GLIDE SPORT	1987	1992	5	S	AGF1511
HARLEY DAVIDSON	1340	FLST HERITAGE SOFTAIL	1986	1990	2	S	AGF1540
HARLEY DAVIDSON	1340	FLSTN HERITAGE SOFTAIL NOSTALGIA	1993	1998	3	S	AGF1569
HARLEY DAVIDSON	1340	FLTC TOUR GLIDE CLASSIC	1984	1993	5	S	AGF1575
HARLEY DAVIDSON	1340	FLTC-U ULTRA CLASSIC TOUR GLIDE	1988	1991	5	S	AGF1585
HARLEY DAVIDSON	1340	FXDB DYNA DAYTONA	1991	1993	4	S	AGF1593
HARLEY DAVIDSON	1340	FXDC DYNA GLIDE CUSTOM	1991	1993	4	S	AGF1596
HARLEY DAVIDSON	1340	FXEF SUPER GLIDE FAT BOB	1984	1985	2	S	AGF1632
HARLEY DAVIDSON	1340	FXLR LOW RIDER CUSTOM	1991	1994	3	S	AGF1634
HARLEY DAVIDSON	1340	FXRS LOW RIDER	1991	1992	3	S	AGF1648
HARLEY DAVIDSON	1340	FXRS-SP LOW RIDER SPORT	1985	1993	5	S	AGF1665
HARLEY DAVIDSON	1340	FXSB LOW RIDER	1982	1984	3	S	AGF1685
HARLEY DAVIDSON	1340	FXST SOFTAIL	1983	1990	3	S	AGF1688
HARLEY DAVIDSON	1340	FXST SOFTAIL STANDARD	1998	1999	3	S	AGF1696
HARLEY DAVIDSON	1340	FXSTC SOFTAIL CUSTOM	1985	1998	3	S	AGF1700
HARLEY DAVIDSON	1340	FXSTS SPRINGER SOFTAIL	1988	1998	3	S	AGF1714
HARLEY DAVIDSON	1340	FXSTSB BAD BOY	1994	1996	3	S	AGF1725

TUBI FRENO BRAKE LINES

AGGIORNATO A DICEMBRE 2016 / last updated on December 2016 **www.accossato.com/accessori-moto/tubi-freno.html**

I KIT TUBI FRENO ACCOSSATO SONO FORNITI COMPLETI DI PARTE ANTERIORE E POSTERIORE
Accossato brake line kits encompass front&rear components

MARCA Brand	CC	MODELLO Model	ANNI / Years DA From	ANNI / Years A To	NR. TUBI Hoses N°	LAYOUT	CODICE Reference
HARLEY DAVIDSON	1340	FXWG WIDE GLIDE	1980	1985	5	S	AGF1728
HARLEY DAVIDSON	1450	FLTRI ROAD GLIDE	1998	2000	5	S	AGF1813
HARLEY DAVIDSON	1450	FXDX DYNA SUPER GLIDE SPORT	1998	2007	4	S	AGF1619
HARLEY DAVIDSON	1450	FXDX SUPER GLIDE SPORT	1998	2001	4	S	AGF1623
HARLEY DAVIDSON	1584	FXDC DYNA SUPER GLIDE CUSTOM	2008	2010	1	S	AGF1818
HARLEY DAVIDSON	1584	FXDF1584 FAT BOB	2007	2010	4	S	AGF1827
HARLEY DAVIDSON	1584	FXSTC SOFTAIL CUSTOM	2008	2010	1	S	AGF1817
HARLEY DAVIDSON	1800	FXSTS SE3 CVO SOFTAIL SPRINGER	2009		2	S	AGF1801
HARLEY DAVIDSON		FLHR ROAD KING	1994	2001	5	S	AGF1503
HARLEY DAVIDSON		FLHR ROAD KING INJECTION	1995	1997	5	S	AGF1508
HARLEY DAVIDSON		FLHTC ELECTRA GLIDE CLASSIC	1985	1993	5	S	AGF1517
HARLEY DAVIDSON		FLHTC ELECTRA ULTRA GLIDE CLASSIC	2000	2006	4	S	AGF1822
HARLEY DAVIDSON		FLHTC-U ULTRA CLASSIC ELECTRA GLIDE	1988	1994	5	S	AGF1526
HARLEY DAVIDSON		FLHTC-UI ULTRA CLASSIC ELECTRA GLIDE	1995	2001	4	S	AGF1533
HARLEY DAVIDSON		FLSTC HERITAGE SOFTAIL CLASSIC	1987	2003	3	S	AGF1545
HARLEY DAVIDSON		FLSTF FAT BOY	1989	2006	3	S	AGF1558
HARLEY DAVIDSON		FLSTF FAT BOY	2007	2011	1	S	AGF1823
HARLEY DAVIDSON		FXD SUPER GLIDE	1994	1997	2	S	AGF1589
HARLEY DAVIDSON		FXDB STREET BOB	2006	2010	2	S	AGF1814
HARLEY DAVIDSON		FXDL DYNA LOWRIDER	1992	1998	4	S	AGF1599
HARLEY DAVIDSON		FXDS-C DYNA LOW RIDER CONVERTIBLE	1994	1997	4	S	AGF1605
HARLEY DAVIDSON		FXDWG DYNA WIDE GLIDE	1992	2001	2	S	AGF1609
HARLEY DAVIDSON		FXE SUPER GLIDE	1980	1984	2	S	AGF1627
HARLEY DAVIDSON		FXR SUPER GLIDE CUSTOM	1985	1994	2	S	AGF1638
HARLEY DAVIDSON		FXRS SUPER GLIDE	1982	1990	3	S	AGF1650
HARLEY DAVIDSON		FXRS-C LOW RIDER CONVERTIBLE	1989	1993	5	S	AGF1660
HARLEY DAVIDSON		FXRT SPORT GLIDE TOURER	1983	1993	4	S	AGF1674
HARLEY DAVIDSON		FXRT SUPER GLIDE FAT BOB	1985		5	S	AGF1684
HARLEY DAVIDSON		FXSTB NIGHT TRAIN SOFT TAIL	2000	2007	2	S	AGF1815
HARLEY DAVIDSON		FXSTB SOFTAIL NIGHT TRAIN	1998	1999	3	S	AGF1698
HARLEY DAVIDSON		SPORTSTER LOW	2009	2010	1	S	AGF1820
HARLEY DAVIDSON		V-ROD VRSC	2001	2006	5	S	AGF1810
HARLEY DAVIDSON		V-ROD VRSC	2001	2006	1	C	AGC1810
HARLEY DAVIDSON		VRSCDX NIGHT ROD SPECIAL	2007	2010	4	S	AGF1504
HARLEY DAVIDSON		VRSCDX NIGHT ROD SPECIAL	2007	2010	1	C	AGC1504
HARLEY DAVIDSON		FLSTI HERITAGE	2006	2006	1	S	AGFG1541
HONDA	50	XR50 / XR100 MOTARD	2005	2009	1	S	AGF2561
HONDA	80	CR80 BIG WHEEL	1996	2002	1	S	AGF2757
HONDA	80	MBX80 FWDD	1983	1986	3	S	AGF2280
HONDA	125	ANF125I INNOVA	2003	2009	1	S	AGF2770
HONDA	125	CB125R-SD	1983	1986	1	S	AGF2031
HONDA	125	CB125T-DC SUPERDREAM	1982	1988	1	S	AGF2035
HONDA	125	CBF125	2009		1	S	AGF2826
HONDA	125	CBR125R	2004	2010	2	S	AGF2672
HONDA	125	CBR125R	2011	2016	2	S	AGF2872
HONDA	125	CG125 ES4 ES8	2004	2008	1	S	AGF2820
HONDA	125	CG125 TITAN ES	2000	2004	1	S	AGF2846
HONDA	125	CLR125 CITY FLY	1998	2003	1	S	AGF2671
HONDA	125	CR125	1992	1994	2	S	AGF2707
HONDA	125	CR125	1995	2003	2	S	AGF2705
HONDA	125	CR125	2004	2006	2	S	AGF2716
HONDA	125	CR125 R	2006	2008	2	S	AGF2759
HONDA	125	MBX125 F-E	1984	1985	1	S	AGF2278
HONDA	125	ML125	1980	1985	1	S	AGF2841
HONDA	125	ML125	1986	2000	1	S	AGF2842
HONDA	125	MSX125	2013	2015	2	S	AGF2295
HONDA	125	MTX125 RWF - WL	1985	1994	1	S	AGF2284
HONDA	125	NS125 FG - FH	1986	1990	2	S	AGF2298
HONDA	125	NS125 RK - RL SUPERSPORT	1988	1989	4	S	AGF2305
HONDA	125	NSR125 RK - R3	1990	2003	2	S	AGF2311

TUBI FRENO BRAKE LINES

AGGIORNATO A DICEMBRE 2016 / last updated on December 2016 **www.accossato.com/accessori-moto/tubi-freno.html**

I KIT TUBI FRENO ACCOSSATO SONO FORNITI COMPLETI DI PARTE ANTERIORE E POSTERIORE
Accossato brake line kits encompass front&rear components

MARCA Brand	CC	MODELLO Model	ANNI / Years DA From	ANNI / Years A To	NR. TUBI Hoses N°	LAYOUT	CODICE Reference
HONDA	125	RS125	1991		1	S	AGF2347
HONDA	125	RS125	2009		2	S	AGF2850
HONDA	125	RS125 W ROAD RACER	1991		3	S	AGF2348
HONDA	125	SES125 DYLAN	2000	2007	1	S	AGF2771
HONDA	125	SH125	2001	2004	1	S	AGF2016
HONDA	125	SH125I	2005	2008	1	S	AGF2766
HONDA	125	VT125C SHADOW	2004	2008	1	S	AGF2683
HONDA	125	XL125 RF	1985	1987	1	S	AGF2534
HONDA	125	XL125 RT	1980		1	S	AGF2536
HONDA	125	XL125V VARADERO	2000	2003	2	S	AGF2876
HONDA	125	XL125V VARADERO	2004	2005	2	S	AGF2682
HONDA	125	XL125V VARADERO	2007	2008	2	S	AGF2775
HONDA	125	XR125L	2003	2008	1	S	AGF2781
HONDA	150	CBX150 AERO	1990	1997	1	S	AGF2838
HONDA	150	CG150 TITAN	2009	2010	1	S	AGF2840
HONDA	150	CRF150R	2007	2015	2	S	AGF2760
HONDA	150	NXR150 BROS ESD	2000	2010	1	S	AGF2845
HONDA	150	SH150I	2013	2016	4	S	AGA0031
HONDA	200	MTX200 RWD	1983	1986	1	S	AGF2294
HONDA	200	XLR200	1995	2009	1	S	AGF2824
HONDA	200	XR200	1995	2009	1	S	AGF2825
HONDA	230	CRF230F	2003	2015	1	S	AGF2778
HONDA	250	250 RSB			1	S	AGF2002
HONDA	250	ATC250 R	1983		2	S	AGF2010
HONDA	250	ATC250R	1986		2	S	AGF2867
HONDA	250	CB250N A B DXB SUPERDREAM	1980	1983	1	S	AGF2043
HONDA	250	CB250RS-A	1980	1983	1	S	AGF2049
HONDA	250	CB250RS-DC DELEUXE	1982	1984	1	S	AGF2053
HONDA	250	CBF250 HORNET	1996	2006	2	S	AGF2701
HONDA	250	CBF250 HORNET	2004	2007	2	S	AGF2677
HONDA	250	CBR250 RRJ - RRK MC19	1988	1989	2	S	AGF2809
HONDA	250	CBR250 RRM - RRX MC22	1990	1999	3	F	AGF2746
HONDA	250	CBR250R	2011	2013	2	F	AGF2873
HONDA	250	CBX250 RSE	1984	1986	1	S	AGF2812
HONDA	250	CBX250 TWISTER	2000	2010	1	S	AGF2834
HONDA	250	CBX250 TWISTER	2001	2008	1	S	AGF2839
HONDA	250	CJ250 T	1977	1978	2	S	AGF2200
HONDA	250	CM250 TB CUSTOM	1982	1984	1	S	AGF2202
HONDA	250	CR250	1992	1994	2	S	AGF2706
HONDA	250	CR250	1995	1998	2	S	AGF2206
HONDA	250	CR250	2004	2007	2	S	AGF2715
HONDA	250	CR250	1999	2003	2	S	AGF2013
HONDA	250	CR250 RJ	1988		1	S	AGF2346
HONDA	250	CR250R	1990	1991	2	S	AGF2853
HONDA	250	CRF250L	2013	2015	2	S	AGF2877
HONDA	250	CRF250R	2010	2013	2	S	AGF2860
HONDA	250	CRF250R	2008	2009	2	S	AGF2789
HONDA	250	CRF250R	2004	2007	2	S	AGF2818
HONDA	250	CRF250X	2004	2005	2	S	AGF2816
HONDA	250	CRF250X	2006	2013	2	S	AGF2758
HONDA	250	CRM250	1996	1998	2	S	AGF2576
HONDA	250	FORZA 250	2000	2003	4	S	AGF2755
HONDA	250	NSR250 (MC16)	1986	1987	4	S	AGF2868
HONDA	250	NSR250 (MC16)	1986	1987	3	F	AGF2869
HONDA	250	NSR250 (MC18 R/SP) R2J - R4J	1988	1988	3	S	AGF2815
HONDA	250	NSR250 (MC18 R/SP) R5K - R6K	1989	1989	3	S	AGF2714
HONDA	250	NSR250 (MC21 R/SE/SP)	1990	1993	3	S	AGF2712
HONDA	250	NSR250 (MC28 R/SE/SP)	1994	1998	3	S	AGF2713
HONDA	250	NSR250R TWIN DISC IMPORT	1993	1996	3	S	AGF2319
HONDA	250	QUAD : TRX250EX	2003	2006	3	F	AGF2702

TUBI FRENO BRAKE LINES

AGGIORNATO A DICEMBRE 2016 / last updated on December 2016 **www.accossato.com/accessori-moto/tubi-freno.html**

I KIT TUBI FRENO ACCOSSATO SONO FORNITI COMPLETI DI PARTE ANTERIORE E POSTERIORE
Accossato brake line kits encompass front&rear components

MARCA Brand	CC	MODELLO Model	ANNI / Years DA From	ANNI / Years A To	NR. TUBI Hoses N°	LAYOUT	CODICE Reference
HONDA	250	RS250	1996		3	F	AGF2747
HONDA	250	VT250 FD	1983	1987	1	S	AGF2481
HONDA	250	VTR250 Y (MC33)	2000	2003	2	S	AGF2786
HONDA	250	XR250L	2004		2	S	AGF2848
HONDA	250	XR250R	1997	2005	2	S	AGF2603
HONDA	250	CR250 RK	1989	-	2	S	AGF2345
HONDA	250	NSF250R - MOTO 3	2011	2016	2	S	AGF2001
HONDA	300	CB300R	2008	2010	1	S	AGF2835
HONDA	300	QUAD : TRX300EX	2002	2006	3	F	AGF2703
HONDA	300	XRE300	2008	2010	2	S	AGF2836
HONDA	300	SH300I ABS	2007	2009	9	S	AGF2765
HONDA	300	SH300I ABS	2013	2016	4	S	AGA0032
HONDA	350	CB350S-G	1986	1988	3	S	AGF2056
HONDA	350	NX350	1998	2006	1	S	AGF2843
HONDA	350	XL350R	1989		1	S	AGF2538
HONDA	360	CB360	1973		2	S	AGF2575
HONDA	400	BROS 400	1988	1995	2	S	AGF2650
HONDA	400	CB1 (400) NC27	1989	1993	2	S	AGF2804
HONDA	400	CB1 (SUPER 400) NC31	1992	1996	3	F	AGF2748
HONDA	400	CB400 / 4 F2	1978		2	S	AGF2063
HONDA	400	CB400 F	1975	1977	3	S	AGF2059
HONDA	400	CB400 F TWIN DISC	1989	1990	2	S	AGF2060
HONDA	400	CB400 SF	1995		3	S	AGF2649
HONDA	400	CB400 SUPER FOUR	1998	2000	3	O	AGF2751
HONDA	400	CB400 SUPER FOUR	1998	2000	3	F	AGF2752
HONDA	400	CB400 SUPER FOUR VTEC 1 AND 2	2001	2004	3	O	AGF2753
HONDA	400	CB400 SUPER FOUR VTEC 1 AND 2	2001	2004	3	F	AGF2754
HONDA	400	CB400 T	1977		1	S	AGF2062
HONDA	400	CB400F SUPER FOUR IMPORT	1998		3	S	AGF2064
HONDA	400	CB400N SUPERDREAM	1978	1981	3	S	AGF2061
HONDA	400	CBR400R	1985	1987	3	S	AGF2115
HONDA	400	CBR400RR GULLARM NC29	1989	1996	4	S	AGF2118
HONDA	400	CBR400RR GULLARM NC29	1989	1996	3	F	AGF2119
HONDA	400	CBR400RR TRIARM NC23	1988	1989	3	F	AGF2134
HONDA	400	NS400 RF - RG	1985	1988	4	S	AGF2307
HONDA	400	NX4 FALCON	2000	2010	2	S	AGF2844
HONDA	400	QUAD : TRX400EX	2003	2003	3	F	AGF2691
HONDA	400	QUAD : TRX400EX	2004	2006	3	F	AGF2704
HONDA	400	RVF400R (NC35)	1994	1996	4	S	AGF2349
HONDA	400	RVF400R (NC35)	1994	1996	3	F	AGF2350
HONDA	400	VF400F D	1982	1984	2	S	AGF2428
HONDA	400	VF400F D	1982	1984	1	C	AGC2428
HONDA	400	VFR400R (NC21) IMPORT	1985	1987	4	S	AGF2451
HONDA	400	VFR400R (NC21) IMPORT	1985	1987	1	C	AGC2451
HONDA	400	VFR400R (NC24) IMPORT	1987	1989	3	S	AGF2454
HONDA	400	VFR400R (NC30) IMPORT	1989	1995	3	S	AGF2457
HONDA	400	XR400R	1997	2005	2	S	AGF2601
HONDA	450	CB450 DX	1989	1992	4	S	AGF2065
HONDA	450	CBR450 SR	1988	1994	4	S	AGF2837
HONDA	450	CRF450	2002	2003	2	S	AGF2594
HONDA	450	CRF450R	2004	2007	2	S	AGF2602
HONDA	450	CRF450R	2008	2008	2	S	AGF2782
HONDA	450	CRF450R	2009	2013	2	S	AGF2790
HONDA	450	CRF450R	2014	2015	2	S	AGF2012
HONDA	450	CRF450X	2008	2015	2	S	AGF2861
HONDA	450	CRF450X	2005	2007	2	S	AGF2788
HONDA	450	QUAD : TRX450	2003	2006	3	F	AGF2700
HONDA	450	QUAD : TRX450	2004	2006	4	S	AGF2743
HONDA	450	QUAD : TRX450 - ATV ONLY	2004	2006	4	S	AGF2744
HONDA	450	QUAD : TRX450 : WINROW ENDURO	2004	2006	4	S	AGF2779

TUBI FRENO BRAKE LINES

AGGIORNATO A DICEMBRE 2016 / last updated on December 2016 **www.accossato.com/accessori-moto/tubi-freno.html**

I KIT TUBI FRENO ACCOSSATO SONO FORNITI COMPLETI DI PARTE ANTERIORE E POSTERIORE
Accossato brake line kits encompass front&rear components

MARCA Brand	CC	MODELLO Model	ANNI / Years DA From	ANNI / Years A To	NR. TUBI Hoses N°	LAYOUT	CODICE Reference
HONDA	450	QUAD : TRX450 : WINROW MX	2004	2006	4	S	AGF2780
HONDA	450	CB450 K5 USA IMPORT	1972	1972	2	S	AGF2067
HONDA	500	CB500 K1	1972		2	S	AGF2827
HONDA	500	CB500 R-T	1994	1996	1	S	AGF2863
HONDA	500	CB500 SW - SX	1997	2002	2	S	AGF2068
HONDA	500	CB500 T			2	S	AGF2787
HONDA	500	CB500 V - W - X	1996	2001	2	S	AGF2066
HONDA	500	CBF500	2004	2007	2	S	AGF2730
HONDA	500	CR500	1985	1988	2	S	AGF2847
HONDA	500	CR500	1992	1994	2	S	AGF2207
HONDA	500	CR500	1995	2003	2	S	AGF2208
HONDA	500	CR500	2004	2005	2	S	AGF2717
HONDA	500	CX500	1978		3	S	AGF2784
HONDA	500	CX500 A - B	1979	1982	3	S	AGF2209
HONDA	500	CX500 CB CUSTOM	1981	1984	3	S	AGF2213
HONDA	500	CX500 EC EUROSPORT	1982	1984	4	S	AGF2217
HONDA	500	CX500 ET TURBO	1982	1984	4	S	AGF2220
HONDA	500	FT500 C	1982	1984	2	S	AGF2230
HONDA	500	GB500 TT CAFE RACER	1989	1990	1	S	AGF2865
HONDA	500	GL500 SILVERWING	1982	1984	3	S	AGF2272
HONDA	500	VF500 F2E	1984	1987	4	S	AGF2432
HONDA	500	VT500 ED - EF	1983	1988	1	S	AGF2486
HONDA	500	XBR500 F - SJ	1985	1989	1	S	AGF2528
HONDA	550	CB550 F1 - F2	1977		2	S	AGF2072
HONDA	550	CB550 K3	1977		2	S	AGF2077
HONDA	550	CBX550 F2C - FD	1982	1986	4	S	AGF2184
HONDA	550	CB550 F1 - F2	1977	-	2	S	AGF2073
HONDA	600	BROS 600	1988	1995	2	S	AGF2658
HONDA	600	CB600F HORNET	2007	2013	3	F	AGF2874
HONDA	600	CB600F HORNET	1998	2002	3	F	AGF2081
HONDA	600	CB600F HORNET	2003	2006	3	F	AGF2694
HONDA	600	CB600F HORNET	2007	2013	4	S	AGF2308
HONDA	600	CB600F HORNET	2007	2013	3	O	AGF2310
HONDA	600	CBF600	2004	2007	4	S	AGF2674
HONDA	600	CBF600	2004	2007	3	F	AGF2675
HONDA	600	CBF600	2004	2007	3	O	AGF2676
HONDA	600	CBF600 (FAIRED & UNFAIRED)	2008	2010	3	F	AGF2795
HONDA	600	CBR600 F1 - F7 SPORT	2001	2007	3	F	AGF2158
HONDA	600	CBR600 F1 - F7 SPORT	2001	2007	3	O	AGF2159
HONDA	600	CBR600 F1 - F7 SPORT	2001	2007	4	S	AGF2160
HONDA	600	CBR600 FH - FJ - FK	1987	1989	4	S	AGF2136
HONDA	600	CBR600 FL	1990	1990	4	S	AGF2139
HONDA	600	CBR600 FM - FN - FP - FR	1991	1994	4	S	AGF2140
HONDA	600	CBR600 FM - FN - FP - FR	1991	1994	3	F	AGF2141
HONDA	600	CBR600 FS - FT - FW	1995	1998	3	F	AGF2622
HONDA	600	CBR600 FS - FT - FW	1995	1998	4	S	AGF2623
HONDA	600	CBR600 FS - FT - FW	1995	1998	3	O	AGF2624
HONDA	600	CBR600 FX - F3 AND SPORT	1998	2004	3	F	AGF2153
HONDA	600	CBR600 FX - F3 AND SPORT	1998	2004	3	O	AGF2154
HONDA	600	CBR600 FX - F3 AND SPORT	1998	2004	4	S	AGF2155
HONDA	600	CBR600RR	2003	2004	3	F	AGF2588
HONDA	600	CBR600RR	2003	2004	3	O	AGF2589
HONDA	600	CBR600RR	2005	2006	3	F	AGF2718
HONDA	600	CBR600RR	2005	2006	3	O	AGF2719
HONDA	600	CBR600RR	2007	2015	3	O	AGF2761
HONDA	600	CBR600RR	2007	2015	3	F	AGF2762
HONDA	600	NTV600-J REVERE	1988	1991	2	S	AGF2323
HONDA	600	VT600CN - CW SHADOW	1992	2001	1	S	AGF2492
HONDA	600	XL600 LMF PARIS DAKAR	1985	1986	1	S	AGF2537
HONDA	600	XL600 RD -RF	1984	1986	1	S	AGF2549

TUBI FRENO BRAKE LINES

AGGIORNATO A DICEMBRE 2016 / last updated on December 2016 **www.accossato.com/accessori-moto/tubi-freno.html**

I KIT TUBI FRENO ACCOSSATO SONO FORNITI COMPLETI DI PARTE ANTERIORE E POSTERIORE
Accossato brake line kits encompass front&rear components

MARCA Brand	CC	MODELLO Model	ANNI / Years DA From	A To	NR. TUBI Hoses N°	LAYOUT	CODICE Reference
HONDA	600	XL600 VH - VK TRANSALP	1987	1989	1	S	AGF2386
HONDA	600	XL600 VL - VT TRANSALP	1992	1996	2	S	AGF2390
HONDA	600	XL600 VV - VX TRANSALP (TWIN DISC)	1997	2003	3	F	AGF2870
HONDA	600	XL600 XL650 VU - V7 TRANSALP	2001	2007	3	F	AGF2540
HONDA	600	XR600R	1991	1995	2	S	AGF2822
HONDA	600	XL600 XL650 VU - V7 TRANSALP	2001	2007	4	S	AGF2539
HONDA	650	BROS 650	1988	1995	2	S	AGF2011
HONDA	650	CB650 SC NIGHTHAWK	1982	1985	3	S	AGF2086
HONDA	650	CB650 Z	1981	1982	3	S	AGF2087
HONDA	650	CB650F NON ABS	2015		3	F	AGF2090
HONDA	650	CX650 CUSTOM	1983		1	S	AGF2851
HONDA	650	CX650 E	1983	1986	4	S	AGF2750
HONDA	650	CX650 ED EUROSPORT	1983	1986	4	S	AGF2223
HONDA	650	CX650 TD TURBO	1983	1985	3	S	AGF2227
HONDA	650	FMX650	2004	2008	2	S	AGF2735
HONDA	650	GLE650 D2E SILVERWING	1984	1986	3	S	AGF2275
HONDA	650	NTV650 DEAUVILLE VW - V1	1998	2001	3	F	AGF2749
HONDA	650	NTV650 P - V	1992	1996	2	S	AGF2326
HONDA	650	NX650 J - X DOMINATOR	1988	2001	2	S	AGF2330
HONDA	650	NX650 J - X DOMINATOR (ITALIAN)	1997	2001	2	S	AGF2864
HONDA	650	SLR650 V - W	1997	1999	2	S	AGF2363
HONDA	650	XL650 RY TRANSALP	2000	2002	3	F	AGF2552
HONDA	650	XR650 ENDURO	1997	2006	2	S	AGF2559
HONDA	650	XR650R UK	1997	2006	2	S	AGF2855
HONDA	650	XR650R UK SUPERMOTO'D BY CUSTOMER	1997	2006	2	S	AGF2856
HONDA	650	XR650R USA	2001	2007	2	S	AGF2857
HONDA	650	XR650R USA SUPERMOTO'D BY CUSTOMER	2001	2007	2	S	AGF2858
HONDA	650	XRV650 AFRICA TWIN	1988	1989	2	S	AGF2871
HONDA	700	NC700 DCT-ABS	2012	2014	5	S	AGF2890
HONDA	700	VF700C MAGNA (IMPORT)	1987	1988	3	S	AGF2436
HONDA	700	VF700C MAGNA (IMPORT)	1987	1988	1	C	AGC2436
HONDA	700	NTV700V DEAUVILLE	2006	2008	8	S	AGA0049
HONDA	750	750 F2	1979		4	S	AGF2004
HONDA	750	750 K2	1975		2	S	AGF2005
HONDA	750	750 K2	1979		2	S	AGF2006
HONDA	750	750 K6	1983		2	S	AGF2007
HONDA	750	750 SUPERSPORT			4	S	AGF2008
HONDA	750	750/4 F1			3	S	AGF2009
HONDA	750	CB750 CUSTOM	1980	1985	3	S	AGF2103
HONDA	750	CB750 F	1981		4	S	AGF2088
HONDA	750	CB750 F1 TWIN DISC	1977		4	S	AGF2089
HONDA	750	CB750 F2 TWIN DISC	1977		4	S	AGF2854
HONDA	750	CB750 F2N - F2V	1992	1997	4	S	AGF2092
HONDA	750	CB750 FB	1980	1981	4	S	AGF2094
HONDA	750	CB750 K2 SINGLE DISC	1972		2	S	AGF2095
HONDA	750	CB750 K3 SINGLE DISC	1973		2	S	AGF2104
HONDA	750	CB750 K6	1976	1976	2	S	AGF2720
HONDA	750	CB750 K7	1978	1979	2	S	AGF2096
HONDA	750	CB750 KZ	1978	1980	4	S	AGF2097
HONDA	750	CBR750 JAPANESE IMPORT	1987	1988	3	F	AGF2666
HONDA	750	CBX750 F1	1984	1986	4	S	AGF2196
HONDA	750	CBX750 FE	1984	1986	4	S	AGF2197
HONDA	750	NC750 S	2014	2015	2	S	AGF2891
HONDA	750	RVF750R R - S (RC45)	1994	1998	4	S	AGF2358
HONDA	750	RVF750R RC45	1994	1998	1	C	AGC2358
HONDA	750	VF750	1983		1	C	AGC2444
HONDA	750	VF750 CH - CV	1987	1996	1	S	AGF2438
HONDA	750	VF750 FD - FE	1983	1984	4	S	AGF2444
HONDA	750	VF750 SABRE	1982	1984	3	S	AGF2447
HONDA	750	VF750 S-C	1982	1984	3	S	AGF2448

TUBI FRENO BRAKE LINES

AGGIORNATO A DICEMBRE 2016 / last updated on December 2016 **www.accossato.com/accessori-moto/tubi-freno.html**

I KIT TUBI FRENO ACCOSSATO SONO FORNITI COMPLETI DI PARTE ANTERIORE E POSTERIORE
Accossato brake line kits encompass front&rear components

MARCA Brand	CC	MODELLO Model	ANNI / Years DA From	ANNI / Years A To	NR. TUBI Hoses N°	LAYOUT	CODICE Reference
HONDA	750	VF750S	1982	1984	1	C	AGC2448
HONDA	750	VFR750 FG - FH	1986	1987	4	S	AGF2464
HONDA	750	VFR750 FG - FH	1986	1987	3	F	AGF2697
HONDA	750	VFR750 FJ - FK	1988	1988	4	S	AGF2466
HONDA	750	VFR750 FJ - FK	1988	1988	3	F	AGF2698
HONDA	750	VFR750 FJ - FK	1986	1987	1	C	AGC2464
HONDA	750	VFR750 FL - FP	1990	1993	1	C	AGC2696
HONDA	750	VFR750 FL - FP (RC24)	1989	1993	4	S	AGF2696
HONDA	750	VFR750 FL - FP (RC24)	1989	1993	3	F	AGF2699
HONDA	750	VFR750 FR - FV	1994	1997	3	F	AGF2635
HONDA	750	VFR750 FR - FV	1994	1997	1	C	AGC2635
HONDA	750	VFR750 RJ - RK (RC30)	1988	1990	3	S	AGF2475
HONDA	750	VFR750 RJ - RK (RC30)	1988	1990	1	C	AGC2475
HONDA	750	VT750 V-W SHADOW	1997	1998	1	S	AGF2859
HONDA	750	VT750C SHADOW SPIRIT	2004	2008	1	S	AGF2688
HONDA	750	XRV750 L - Y AFRICA TWIN	1990	2003	3	F	AGF2823
HONDA	750	XRV750 L - Y AFRICA TWIN *SEE NOTES	1990	2003	5	S	AGF2828
HONDA	800	PC800 PACIFIC OCEAN	1989	1998	3	S	AGF2667
HONDA	800	PC800 PACIFIC OCEAN	1989	1998	1	C	AGC2667
HONDA	800	VFR800 FIW - FI1	1998	2001	10	S	AGF2708
HONDA	800	VFR800 FIW - FI1	1998	2001	1	C	AGC2741
HONDA	800	VFR800 V-TEC NON ABS & ABS	2002	2013	1	C	AGC2742
HONDA	800	VT800 SHADOW IMPORT	1988	1988	2	S	AGF2503
HONDA	800	VFR800 VTECK ABS	2005	2008	12	S	AGA0033
HONDA	900	CB900 F HORNET	1999	2007	3	F	AGF2591
HONDA	900	CB900 F2			0	S	AGF2099
HONDA	900	CB900 FA - FB	1980	1981	4	S	AGF2098
HONDA	900	CB900 FC - FD	1982	1983	4	S	AGF2806
HONDA	900	CB900 FZ	1979	1983	4	S	AGF2100
HONDA	900	CBR900 RRN - RRS FIREBLADE	1992	1995	4	S	AGF2161
HONDA	900	CBR900 RRN - RRS FIREBLADE	1992	1995	3	F	AGF2162
HONDA	900	CBR900 RRT - RRX FIREBLADE	1996	1999	3	F	AGF2172
HONDA	900	CBR900 RRT - RRX FIREBLADE	1996	1999	4	S	AGF2173
HONDA	929	CBR929 RRY - RR1 FIREBLADE	2000	2001	3	F	AGF2179
HONDA	954	CBR954 RR2 - RR3 FIREBLADE	2002	2003	3	F	AGF2580
HONDA	1000	CB1000 FP-FT BIG ONE	1993	1996	4	S	AGF2020
HONDA	1000	CB1000 FP-FT BIG ONE	1993	1996	1	C	AGC2026
HONDA	1000	CB1000 USA IMPORT	1983		3	S	AGF2025
HONDA	1000	CB1000R	2008	2015	5	S	AGF2800
HONDA	1000	CB1000R	2008	2015	2	O	AGF2801
HONDA	1000	CB1000R	2008	2015	4	F	AGF2819
HONDA	1000	CB1000R (NON ABS & ABS)	2008	2015	1	C	AGC2817
HONDA	1000	CB1100 RC - RD	1982	1984	4	S	AGF2028
HONDA	1000	CBF1000	2006	2010	1	C	AGC2725
HONDA	1000	CBF1000	2006	2010	3	F	AGF2726
HONDA	1000	CBF1000	2006	2010	4	S	AGF2725
HONDA	1000	CBR1000 FH - FJ	1987	1988	4	S	AGF2101
HONDA	1000	CBR1000 FH - FJ	1987	1988	3	F	AGF2102
HONDA	1000	CBR1000 FH - FN	1987	1992	1	C	AGC2121
HONDA	1000	CBR1000 FK - FN	1989	1992	4	S	AGF2807
HONDA	1000	CBR1000 FK - FN	1989	1992	3	F	AGF2808
HONDA	1000	CBR1000F	1987	1992	1	C	AGC2807
HONDA	1000	CBR1000RR FIREBLADE	2004	2005	3	O	AGF2673
HONDA	1000	CBR1000RR FIREBLADE	2004	2005	3	F	AGF2689
HONDA	1000	CBR1000RR FIREBLADE	2006	2007	3	O	AGF2733
HONDA	1000	CBR1000RR FIREBLADE	2006	2007	3	F	AGF2734
HONDA	1000	CBR1000RR FIREBLADE	2008	2015	3	F	AGF2802
HONDA	1000	CBR1000RR FIREBLADE	2008	2015	3	O	AGF2803
HONDA	1000	CBR1000RR FIREBLADE	2004	2007	1	C	AGC2689
HONDA	1000	CBX1000 A	1980	1980	4	S	AGF2810

TUBI FRENO BRAKE LINES

AGGIORNATO A DICEMBRE 2016 / last updated on December 2016 **www.accossato.com/accessori-moto/tubi-freno.html**

I KIT TUBI FRENO ACCOSSATO SONO FORNITI COMPLETI DI PARTE ANTERIORE E POSTERIORE
Accossato brake line kits encompass front&rear components

MARCA Brand	CC	MODELLO Model	ANNI / Years DA From	ANNI / Years A To	NR. TUBI Hoses N°	LAYOUT	CODICE Reference
HONDA	1000	CBX1000 PRO-LINK	1981	1984	4	S	AGF2180
HONDA	1000	CBX1000 Z	1978	1979	4	S	AGF2811
HONDA	1000	GL1000 GOLDWING	1976		4	S	AGF2235
HONDA	1000	GL1000 KZ - K1 GOLDWING	1979	1980	4	S	AGF2234
HONDA	1000	VF1000 FE-FF	1984	1985	4	S	AGF2414
HONDA	1000	VF1000 FII BOL DOR	1986		4	S	AGF2415
HONDA	1000	VF1000 R	1984	1988	1	C	AGC2417
HONDA	1000	VF1000 RE - RG	1984	1986	4	S	AGF2416
HONDA	1000	VF1000 RE - RG	1984	1986	3	F	AGF2417
HONDA	1000	VF1000 RE - RG	1984	1988	1	C	AGC2416
HONDA	1000	VTR1000 FIRESTORM FV - F6	1997	2006	4	S	AGF2504
HONDA	1000	VTR1000 FIRESTORM FV - F6	1997	2006	3	F	AGF2505
HONDA	1000	VTR1000 FIRESTORM FV - F6	1997	2006	3	O	AGF2506
HONDA	1000	VTR1000 FIRESTORM FV - F6	1997	2006	1	C	AGC2504
HONDA	1000	VTR1000 SP1 - SP2	2000	2003	1	C	AGC2522
HONDA	1000	VTR1000 SP1 RC51	1999	2001	3	F	AGF2522
HONDA	1000	VTR1000 SP1 RC51	1999	2001	3	O	AGF2523
HONDA	1000	VTR1000 SP2 RC51	2002	2007	3	F	AGF2526
HONDA	1000	VTR1000 SP2 RC51	2002	2007	3	O	AGF2578
HONDA	1000	GL1000 GOLDWING	1976		4	S	AGF2236
HONDA	1000	CBF1000 ABS FAB -FAC	2011	2016	1	C	AGC2880
HONDA	1100	CBR1100 XXV - XX6	1996	2007	10	S	AGF2709
HONDA	1100	CBR1100 XXV-XX6	1996	2007	1	C	AGC2709
HONDA	1100	GL1100 A - B GOLDWING	1980	1981	4	S	AGF2239
HONDA	1100	GL1100 A GOLDWING (IMPORT)	1982		4	S	AGF2813
HONDA	1100	GL1100 AD ASPENCADE	1983	1983	3	S	AGF2238
HONDA	1100	GL1100 GOLDWING DC DELUXE	1982	1982	3	S	AGF2241
HONDA	1100	ST1100 NON ABS	1990	2002	4	F	AGF2711
HONDA	1100	ST1100 PAN EUROPEAN	1990	2002	1	C	AGC2378
HONDA	1100	ST1100 PAN EUROPEAN NON ABS	1990	2002	5	S	AGF2374
HONDA	1100	ST1100 PAN EUROPEAN NON ABS + ABS	1990	2002	1	C	AGC2379
HONDA	1100	VF1100 MAGNA V65	1984	1988	1	C	AGC2573
HONDA	1100	VF1100 MAGNA V65 IMPORT	1983	1986	4	S	AGF2573
HONDA	1100	VT1100 SHADOW IMPORT	1987	1994	1	S	AGF2814
HONDA	1100	VT1100 SHADOW IMPORT	1987	1994	1	C	AGC2814
HONDA	1200	GL1200 AD ASPENCADE	1983	1983	4	S	AGF2243
HONDA	1200	GL1200 AD ASPENCADE LINKED	1984	1987	3	S	AGF2244
HONDA	1200	GL1200 AE - AH ASPENCADE	1984	1987	1	C	AGC2246
HONDA	1200	GL1200 AE ASPENCADE	1984	1984	4	S	AGF2245
HONDA	1200	GL1200 AF - AG - AH ASPENCADE	1985	1988	4	S	AGF2246
HONDA	1200	GL1200 DE GOLDWING DELUXE	1984	1984	3	S	AGF2250
HONDA	1200	GL1200 INTERSTATE	1984		4	S	AGF2849
HONDA	1300	CB1300	1997	2002	4	S	AGF2690
HONDA	1300	CB1300	1995	2002	1	C	AGC2690
HONDA	1300	CB1300 SA	2008	2010	1	C	AGC2723
HONDA	1300	CB1300F	2003	2008	4	S	AGF2721
HONDA	1300	CB1300F	2003	2008	3	F	AGF2722
HONDA	1300	CB1300F	2003	2008	1	C	AGC2721
HONDA	1300	CB1300S	2003	2008	4	S	AGF2723
HONDA	1300	CB1300S	2003	2008	3	F	AGF2724
HONDA	1300	VTX1300 (CON TUBO IN METALLO/WITH METAL PIPE)	2004	2008	3	S	AGF2684
HONDA	1300	VTX1300 (NO TUBO IN METALLO/NO METAL PIPE)	2004	2008	2	S	AGF2830
HONDA	1300	X4 1300	1997	2003	4	S	AGF2668
HONDA	1300	X4 1300	1997	2003	3	F	AGF2670
HONDA	1300	X4 1300	1997	2003	1	C	AGC2668
HONDA	1500	GL1500 J - K - L GOLDWING	1988	1991	4	S	AGF2252
HONDA	1500	GL1500 J SEY GOLDWING	1988	2000	4	S	AGF2631
HONDA	1500	VALKYRIE F6C GL1500 CV - CW	1996	2003	4	S	AGF2395
HONDA	1500	VALKYRIE F6C GL1500 CV - CW	1996	2003	3	F	AGF2396
HONDA	1500	VALKYRIE F6C GL1500 CV - CW	1996	2003	3	O	AGF2397

ACCOSSATO

TUBI FRENO BRAKE LINES

AGGIORNATO A DICEMBRE 2016 / last updated on December 2016 **www.accossato.com/accessori-moto/tubi-freno.html**

I KIT TUBI FRENO ACCOSSATO SONO FORNITI COMPLETI DI PARTE ANTERIORE E POSTERIORE
Accossato brake line kits encompass front&rear components

MARCA Brand	CC	MODELLO Model	ANNI / Years DA From	A To	NR. TUBI Hoses N°	LAYOUT	CODICE Reference
HONDA	1500	VALKYRIE F6C GL1500 CV - CW	1996	2003	1	C	AGC2395
HONDA	1800	VTX1800	2004	2008	9	S	AGF2686
HUSABERG	400	400 - 650 MOTORCROSS / ENDURO	1999	2005	2	S	AGF2991
HUSABERG	550	550 FC	1999	2005	2	S	AGF2990
HUSQVARNA	125	WR125 WR250 WR300	2002	2007	2	S	AGF3005
HUSQVARNA	250	TC250	2010	2013	2	S	AGF3009
HUSQVARNA	250	TC250 TC450 TC570	2002	2007	2	S	AGF3002
HUSQVARNA	250	TE250	2010	2015	2	S	AGF3008
HUSQVARNA	250	WR250	2010	2015	2	S	AGF3010
HUSQVARNA	310	TE310 / TE449	2010	2015	2	S	AGF3006
HUSQVARNA	310	TE310 TE450 TE510	2002	2007	2	S	AGF3004
HUSQVARNA	310	TE310R	2010	2015	2	S	AGF3007
HUSQVARNA	350	WR350	2010	2015	2	S	AGF3011
HUSQVARNA	360	WR360	1998	2002	1	S	AGF3003
HUSQVARNA	360	WR360	2003	2004	1	S	AGF3001
HUSQVARNA	650	TR650 TERRA	2012	2014	2	S	AGF3012
HUSQVARNA		TE250 / TC250 / TE310 / TE449 / WR250 / WR350	2010	2015	1	C	AGC3006
HYOSUNG	125	GT125R / GT250R	2006	2007	3	F	AGF3052
HYOSUNG	125	GT125R / GT250R	2006	2007	4	S	AGF3053
HYOSUNG	125	RX125	1995	2005	1	F	AGF3056
HYOSUNG	125	XRX125	2007	2011	1	S	AGF3058
HYOSUNG	250	GT250 EFI	2006	2008	2	S	AGF3057
HYOSUNG	650	GT650 COMET	2003	2005	4	S	AGF3050
HYOSUNG	650	GT650 R	2006	2007	3	F	AGF3051
HYOSUNG	650	GV650	2006	2015	3	S	AGF3054
HYOSUNG	650	GV650	2006	2015	2	F	AGF3055
ITALJET	125	DRAGSTER 125 / 180	1998	2003	2	S	AGF3950
KAWASAKI	50	AR50 C1 - C10	1981	1997	1	S	AGF4042
KAWASAKI	65	KX65 BIG WHEEL	2001	2008	2	S	AGF4278
KAWASAKI	65	KX65 SMALL WHEEL	2001	2008	2	S	AGF4736
KAWASAKI	80	AR80 C1 - C8	1983	1993	1	S	AGF4057
KAWASAKI	80	KX80	1997	2001	2	S	AGF4668
KAWASAKI	85	KX85	1997	2008	2	S	AGF4669
KAWASAKI	100	KH100 G1 - G4	1980	1983	2	S	AGF4728
KAWASAKI	100	KH100 G5 - G8	1984	1993	2	S	AGF4190
KAWASAKI	100	KX100	1997	2001	1	S	AGF4272
KAWASAKI	125	AR125 A1 - B8	1982	1994	1	S	AGF4023
KAWASAKI	125	KH125 K2 - K9	1982	1999	1	S	AGF4201
KAWASAKI	125	KH125 L1-EX	1983	1986	1	S	AGF4202
KAWASAKI	125	KMX125 A1 - A5 B1 - B12	1986	2002	2	S	AGF4251
KAWASAKI	125	KX125	1990	1993	2	S	AGF4274
KAWASAKI	125	KX125	1994	1996	2	S	AGF4671
KAWASAKI	125	KX125	2000	2002	2	S	AGF4666
KAWASAKI	125	KX125	2003	2008	2	S	AGF4006
KAWASAKI	200	KDX200 E1	1990	1994	2	S	AGF4189
KAWASAKI	200	KMX200 A2 - A3	1986	2002	2	S	AGF4252
KAWASAKI	250	BJ250 ESTRELLA	1996	1999	2	S	AGF4675
KAWASAKI	250	EL 250 D4 - D5	1993	1996	1	S	AGF4068
KAWASAKI	250	EL 252 F2	1997	1999	1	S	AGF4072
KAWASAKI	250	ER250 Z250T SCORPION B1 - B3	1983	1990	1	S	AGF4352
KAWASAKI	250	GPX250R	1988	1996	2	F	AGF4661
KAWASAKI	250	KH250 A1	1976	1980	2	S	AGF4210
KAWASAKI	250	KH250 B1 - B5	1979	1982	2	S	AGF4211
KAWASAKI	250	KLR250 D1 - D16	1984	2001	1	S	AGF4238
KAWASAKI	250	KMX250	2007		2	S	AGF4711
KAWASAKI	250	KR1 KR250B2	1989	1992	4	S	AGF4267
KAWASAKI	250	KR1S KR250C2	1989	1992	4	S	AGF4269
KAWASAKI	250	KX250	1990	1992	2	S	AGF4670
KAWASAKI	250	KX250	1994	1996	2	S	AGF4672
KAWASAKI	250	KX250	1997	2000	2	S	AGF4275

TUBI FRENO BRAKE LINES

AGGIORNATO A DICEMBRE 2016 / last updated on December 2016 **www.accossato.com/accessori-moto/tubi-freno.html**

I KIT TUBI FRENO ACCOSSATO SONO FORNITI COMPLETI DI PARTE ANTERIORE E POSTERIORE
Accossato brake line kits encompass front&rear components

MARCA Brand	CC	MODELLO Model	ANNI / Years DA From	A To	NR. TUBI Hoses N°	LAYOUT	CODICE Reference
KAWASAKI	250	KX250	2001	2003	2	S	AGF4652
KAWASAKI	250	KX250	2004	2006	2	S	AGF4679
KAWASAKI	250	KX250	2006	2008	1	S	AGF4700
KAWASAKI	250	KX250F	2004	2006	2	S	AGF4746
KAWASAKI	250	KX250F	2005	2008	2	S	AGF4732
KAWASAKI	250	KX250F	2009	2015	2	S	AGF4731
KAWASAKI	250	NINJA 250R	2008	2012	2	S	AGF4720
KAWASAKI	250	Z250 A1- A3 TWIN	1979	1981	2	S	AGF4349
KAWASAKI	250	ZZR250 EX250 H1 - H2	1990	1992	2	S	AGF4580
KAWASAKI	300	KLX300	1999	2002	2	S	AGF4627
KAWASAKI	300	QUAD : KLF300	2003	2004	3	S	AGF4622
KAWASAKI	305	GPZ305 EX305 A1 - B10	1983	1996	3	S	AGF4108
KAWASAKI	400	GPX400R IMPORT	1987	1988	3	S	AGF4726
KAWASAKI	400	KH400 A1 - A4	1977	1980	2	S	AGF4217
KAWASAKI	400	KLX400	2004	2005	2	S	AGF4681
KAWASAKI	400	KLX400	2006	2007	2	S	AGF4706
KAWASAKI	400	KZ400	1975		2	S	AGF4281
KAWASAKI	400	Z400 FII C2	1984	1987	3	S	AGF4360
KAWASAKI	400	Z400 J1	1979		3	S	AGF4364
KAWASAKI	400	Z400 J2 - J3	1981	1983	3	S	AGF4365
KAWASAKI	400	Z400 S3			1	S	AGF4367
KAWASAKI	400	Z400 TWIN	1980		2	S	AGF4368
KAWASAKI	400	Z400F ZR400 A1 - B1	1983	1985	3	S	AGF4369
KAWASAKI	400	ZX400 G IMPORT	1998		4	S	AGF4683
KAWASAKI	400	ZXR400 H1 - H2 IMPORT	1989	1990	3	F	AGF4624
KAWASAKI	400	ZXR400 L1 - L9	1991	2003	4	S	AGF4531
KAWASAKI	400	ZXR400 L1 - L9	1991	2003	3	F	AGF4532
KAWASAKI	400	ZZR400	1990	2006	3	S	AGF4614
KAWASAKI	400	ZX400 C2-C3	1985	1987	4	S	AGF4008
KAWASAKI	440	Z440 (LTD Z440) A	1981	1983	2	S	AGF4377
KAWASAKI	440	Z440 C1 - C2	1980	1982	1	S	AGF4372
KAWASAKI	440	Z440 D4 - D6	1982	1985	1	S	AGF4376
KAWASAKI	440	Z440 H1 - H2	1982	1983	1	S	AGF4374
KAWASAKI	450	EN450 Z450 LTD A1 - A5	1985	1990	1	S	AGF4384
KAWASAKI	450	KLX450R	2008	2015	2	S	AGF4722
KAWASAKI	450	KMX450	2007		2	S	AGF4710
KAWASAKI	450	KX450F	2009	2015	2	S	AGF4750
KAWASAKI	450	KX450F	2006	2008	2	S	AGF4704
KAWASAKI	500	EN500 A1 - C2	1990	1997	1	S	AGF4075
KAWASAKI	500	ER-5 ER500 A1 - C1	1996	2006	1	S	AGF4081
KAWASAKI	500	GPZ500 S EX500 A1 - A6	1987	1993	1	S	AGF4118
KAWASAKI	500	GPZ500 S EX500 D1 - D7 MONODISCO	1994	2003	2	S	AGF4615
KAWASAKI	500	KH500	1976		2	S	AGF4221
KAWASAKI	500	KLE500 A1 - A3	1991	2002	2	S	AGF4226
KAWASAKI	500	KLE500 A3 - A7	2003	2007	2	S	AGF4759
KAWASAKI	500	KX500	1990	1993	2	S	AGF4276
KAWASAKI	500	KX500	1994	2001	2	S	AGF4643
KAWASAKI	500	KX500	2001	2004	2	S	AGF4667
KAWASAKI	500	VULCAN 500	1996	1997	1	S	AGF4729
KAWASAKI	500	Z500	1980	1983	3	S	AGF4391
KAWASAKI	500	GPZ500 S E9-E10 (TWIN DISC)	2002	2004	4	S	AGF4616
KAWASAKI	550	550 ZR550 B1 - B6 ZEPHYR	1991	1998	4	S	AGF4427
KAWASAKI	550	GPZ550 Z550 A1 - A4	1983	1988	4	S	AGF4126
KAWASAKI	550	GPZ550 Z550 D1	1981	1981	3	S	AGF4130
KAWASAKI	550	GPZ550 Z550 H1 - H2 UNITRAK	1982	1982	4	S	AGF4131
KAWASAKI	550	GT550 Z550 G1 - G9	1983	2001	3	S	AGF4165
KAWASAKI	550	Z550 A1	1980		3	S	AGF4392
KAWASAKI	550	Z550 A2 - A3	1981	1982	3	S	AGF4393
KAWASAKI	550	Z550 F ZR550 A1 - A2	1982	1987	3	S	AGF4395
KAWASAKI	550	Z550 LTD C1 - C2	1980	1983	3	S	AGF4400

TUBI FRENO BRAKE LINES

AGGIORNATO A DICEMBRE 2016 / last updated on December 2016 **www.accossato.com/accessori-moto/tubi-freno.html**

I KIT TUBI FRENO ACCOSSATO SONO FORNITI COMPLETI DI PARTE ANTERIORE E POSTERIORE
Accossato brake line kits encompass front&rear components

MARCA Brand	CC	MODELLO Model	ANNI / Years DA From	ANNI / Years A To	NR. TUBI Hoses N°	LAYOUT	CODICE Reference
KAWASAKI	600	GPX600R C1 - C3	1988	1997	4	S	AGF4087
KAWASAKI	600	GPZ600R ZX600 A1 - A5	1985	1990	6	S	AGF4133
KAWASAKI	600	GPZ600R ZX600 A1 - A5	1985	1990	5	F	AGF4134
KAWASAKI	600	KLR600 A1 - B4	1984	1990	1	S	AGF4240
KAWASAKI	600	ZL600 B1 ELIMINATOR	1995	1997	1	S	AGF4453
KAWASAKI	600	ZX6R NINJA	2013	2015	3	F	AGF4799
KAWASAKI	600	ZX6R NINJA	2013	2015	3	O	AGF4801
KAWASAKI	600	ZX6R NINJA (RADIAL CALIPERS)	2005	2006	3	F	AGF4676
KAWASAKI	600	ZX6R NINJA RADIAL CALIPERS	2007	2008	3	F	AGF4709
KAWASAKI	600	ZX6R NINJA RADIAL CALIPERS	2009	2012	3	F	AGF4734
KAWASAKI	600	ZX6R NINJA ZX600 B1H	2003	2004	3	O	AGF4662
KAWASAKI	600	ZX6R NINJA ZX600 B1H	2003	2004	3	F	AGF4663
KAWASAKI	600	ZX6R NINJA ZX600 C1H 636	2005	2006	3	O	AGF4718
KAWASAKI	600	ZX6R NINJA ZX600 C1H 636	2005	2006	3	F	AGF4719
KAWASAKI	600	ZX6R NINJA ZX600 F1 - F3	1995	1997	4	S	AGF4483
KAWASAKI	600	ZX6R NINJA ZX600 F1 - F3	1995	1997	3	F	AGF4484
KAWASAKI	600	ZX6R NINJA ZX600 G1 - G2	1998	1999	4	S	AGF4489
KAWASAKI	600	ZX6R NINJA ZX600 G1 - G2	1998	1999	3	F	AGF4490
KAWASAKI	600	ZX6R NINJA ZX600 J1 - J2 A1P (636)	2000	2002	4	S	AGF4495
KAWASAKI	600	ZX6R NINJA ZX600 J1 - J2 A1P (636)	2000	2002	3	F	AGF4496
KAWASAKI	600	ZX6RR (LTD EDITION)NINJA RADIAL CALIPERS	2003	2004	3	F	AGF4634
KAWASAKI	600	ZX6RR NINJA B1 - K1	2003		3	O	AGF4698
KAWASAKI	600	ZX6RR NINJA B1 - K1	2003		3	F	AGF4699
KAWASAKI	600	ZX6RR NINJA RADIAL CALIPERS	2005	2006	3	O	AGF4677
KAWASAKI	600	ZZR600 ZX600 D1 - E11	1990	2006	4	S	AGF4584
KAWASAKI	600	ZZR600 ZX600 D1 - E11	1990	2006	3	F	AGF4585
KAWASAKI	600	ER6N	2009	2011	7	S	AGA0028
KAWASAKI	650	ER6-F	2012	2014	3	F	AGF4769
KAWASAKI	650	ER6-F	2012	2014	3	O	AGF4768
KAWASAKI	650	ER-6F	2006	2010	3	F	AGF4687
KAWASAKI	650	ER-6F	2006	2010	3	O	AGF4688
KAWASAKI	650	ER-6F	2012	2015	3	F	AGF4771
KAWASAKI	650	ER-6F	2012	2015	3	O	AGF4772
KAWASAKI	650	ER-6N	2006	2010	3	F	AGF4689
KAWASAKI	650	ER-6N	2006	2010	3	O	AGF4690
KAWASAKI	650	ER-6N	2012	2015	3	O	AGF4762
KAWASAKI	650	ER-6N	2012	2015	3	F	AGF4773
KAWASAKI	650	ER-6N ABS - 7 LINE KIT	2006	2010	7	S	AGF4744
KAWASAKI	650	KL650 B1 - B3 TENGAI	1989	1991	2	S	AGF4222
KAWASAKI	650	KLE650 VERSYS	2007	2009	3	O	AGF4707
KAWASAKI	650	KLE650 VERSYS	2007	2009	3	F	AGF4708
KAWASAKI	650	KLE650 VERSYS	2010	2014	3	O	AGF4775
KAWASAKI	650	KLE650 VERSYS	2010	2014	3	F	AGF4774
KAWASAKI	650	KLE650 VERSYS ABS (7X LINES FRONT & REAR)	2007	2009	7	S	AGF4755
KAWASAKI	650	KLR650 A1 - A3 C1 - C8	1987	2002	2	S	AGF4244
KAWASAKI	650	KLX650 C1 - C2	1993	1996	2	S	AGF4247
KAWASAKI	650	KZ650 F2 - F4 ROADSTER	1981	1984	3	S	AGF4282
KAWASAKI	650	W650 EJ650 A1 - C4 EU WIDE BAR	1999	2006	1	S	AGF4314
KAWASAKI	650	W650 EJ650 A1 - C4 UK LOW BAR	1999	2006	1	S	AGF4313
KAWASAKI	650	Z650 B1	1977		2	S	AGF4405
KAWASAKI	650	Z650 B2 - B3	1978	1979	3	S	AGF4406
KAWASAKI	650	Z650 C2 - C3	1978	1980	4	S	AGF4409
KAWASAKI	650	Z650 D2 - D3	1978	1980	3	S	AGF4411
KAWASAKI	650	Z650 F1	1980		3	S	AGF4412
KAWASAKI	700	QUAD : KFX700	2000	2006	2	S	AGF4684
KAWASAKI	750	750 ZR750 C1 - D1 ZEPHYR	1991	1999	4	S	AGF4003
KAWASAKI	750	750 ZR750 C1 - D1 ZEPHYR	1991	1999	3	F	AGF4004
KAWASAKI	750	GPX750R F1 - F3	1987	1991	1	C	AGC4091
KAWASAKI	750	GPX750R ZX750 F1 - F3	1987	1991	4	S	AGF4091
KAWASAKI	750	GPZ750 TURBO ZX750 E1 - E2	1983	1987	6	S	AGF4147

TUBI FRENO BRAKE LINES

AGGIORNATO A DICEMBRE 2016 / last updated on December 2016 **www.accossato.com/accessori-moto/tubi-freno.html**

I KIT TUBI FRENO ACCOSSATO SONO FORNITI COMPLETI DI PARTE ANTERIORE E POSTERIORE
Accossato brake line kits encompass front&rear components

MARCA Brand	CC	MODELLO Model	ANNI / Years DA From	ANNI / Years A To	NR. TUBI Hoses N°	LAYOUT	CODICE Reference
KAWASAKI	750	GPZ750 Z750 A1 - A5	1983	1988	4	S	AGF4152
KAWASAKI	750	GPZ750 Z750 R1	1982		6	S	AGF4156
KAWASAKI	750	GT750 Z750 P1 - P5	1982	1990	4	S	AGF4179
KAWASAKI	750	GT750 Z750 P7 - P9	1991	1996	4	S	AGF4665
KAWASAKI	750	KH750 SINGLE DISC RETAINING METAL	1975		2	S	AGF4747
KAWASAKI	750	KZ750 E	1980		4	S	AGF4284
KAWASAKI	750	VN750	1995	2006	3	S	AGF4740
KAWASAKI	750	Z750	2004	2006	3	O	AGF4654
KAWASAKI	750	Z750	2004	2006	3	F	AGF4664
KAWASAKI	750	Z750	2007	2012	3	O	AGF4713
KAWASAKI	750	Z750	2007	2012	3	F	AGF4714
KAWASAKI	750	Z750 E			3	S	AGF4415
KAWASAKI	750	Z750 L2 - L4	1982	1984	4	S	AGF4416
KAWASAKI	750	Z750 LTD Z750H2	1980	1981	4	S	AGF4423
KAWASAKI	750	Z750 Y1 TWIN	1982	1983	3	S	AGF4424
KAWASAKI	750	Z750B TWIN	1977		3	S	AGF4703
KAWASAKI	750	Z750S	2004	2006	3	F	AGF4692
KAWASAKI	750	Z750S	2004	2006	3	O	AGF4693
KAWASAKI	750	ZR-7 ZR750 F1 - F5 ZR - 7S H3	1999	2003	4	S	AGF4456
KAWASAKI	750	ZR-7 ZR750 F1 - F5 ZR - 7S H3	1999	2003	3	F	AGF4606
KAWASAKI	750	ZX7R NINJA ZX750 P1 - P7	1996	2003	4	S	AGF4501
KAWASAKI	750	ZX7R NINJA ZX750 P1 - P7	1996	2003	3	F	AGF4502
KAWASAKI	750	ZX7R NINJA ZX750 P1 - P7	1996	2003	1	C	AGC4501
KAWASAKI	750	ZX7RR NINJA ZX750 N1	1996	2003	4	S	AGF4513
KAWASAKI	750	ZX7RR NINJA ZX750 N1	1996	2003	3	F	AGF4514
KAWASAKI	750	ZXR750 H1 - H2	1989	1990	1	C	AGC4545
KAWASAKI	750	ZXR750 J1 - J2	1991	1992	1	C	AGC4547
KAWASAKI	750	ZXR750 K1 - L1	1991	1996	1	C	AGC4551
KAWASAKI	750	ZXR750 M1 - M2	1992	1994	1	C	AGC4558
KAWASAKI	750	ZXR750 ZX750 H1 - H2	1989	1990	4	S	AGF4545
KAWASAKI	750	ZXR750 ZX750 H1 - H2	1989	1990	3	F	AGF4546
KAWASAKI	750	ZXR750 ZX750 J1 - J2	1991	1992	4	S	AGF4547
KAWASAKI	750	ZXR750 ZX750 J1 - J2	1991	1992	3	F	AGF4548
KAWASAKI	750	ZXR750 ZX750 K1 - L1	1991	1996	4	S	AGF4551
KAWASAKI	750	ZXR750 ZX750 K1 - L1	1991	1996	3	F	AGF4552
KAWASAKI	750	ZXR750R ZX750 M1 - M2	1992	1994	4	S	AGF4558
KAWASAKI	750	ZXR750R ZX750 M1 - M2	1992	1994	3	S	AGF4730
KAWASAKI	750	GPZ750R R1 NON ANTI-DIVE	1981	1981	4	S	AGF4148
KAWASAKI	750	Z750R	2011	2012	3	F	AGA0011
KAWASAKI	800	VN800 A1 - A3 B1 - B6 CLASSIC E1 - E2 DRIFTER	1995	2006	1	S	AGF4301
KAWASAKI	800	W800	2011	2015	1	S	AGF4753
KAWASAKI	800	Z800 NON ABS	2013	2015	3	O	AGF4766
KAWASAKI	800	Z800 NON ABS	2013	2015	3	F	AGF4767
KAWASAKI	800	Z800 ABS	2013	2016	5	S	AGF4007
KAWASAKI	900	GPZ900R A1 - A8	1984	1996	1	C	AGC4157
KAWASAKI	900	GPZ900R ZX900 A1 - A6	1984	1989	6	S	AGF4157
KAWASAKI	900	GPZ900R ZX900 A1-6 US SPEC	1984	1989	6	S	AGF4158
KAWASAKI	900	GPZ900R ZX900 A7 - A8	1990	1992	4	S	AGF4685
KAWASAKI	900	GPZ900R ZX900 A7 - A8	1990	1992	3	F	AGF4686
KAWASAKI	900	VN900 CLASSIC	2006	2010	2	S	AGF4691
KAWASAKI	900	Z900	1978		3	S	AGF4426
KAWASAKI	900	Z900 REPLACES METAL PIPE	1976		2	F	AGF4765
KAWASAKI	900	Z900 RETAINS METAL PIPE	1976		2	F	AGF4764
KAWASAKI	900	ZX9R B1 - B4	1994	1997	1	C	AGC4519
KAWASAKI	900	ZX9R C1 - C2	1998	1999	1	C	AGC4523
KAWASAKI	900	ZX9R E1 - E2	2000	2001	1	C	AGC4528
KAWASAKI	900	ZX9R NINJA ZX900 B1 - B2	1994	1995	3	F	AGF4751
KAWASAKI	900	ZX9R NINJA ZX900 B1 - B2	1994	1995	4	S	AGF4752
KAWASAKI	900	ZX9R NINJA ZX900 B3 - B4	1996	1997	4	S	AGF4519
KAWASAKI	900	ZX9R NINJA ZX900 B3 - B4	1996	1997	3	F	AGF4520

TUBI FRENO BRAKE LINES

AGGIORNATO A DICEMBRE 2016 / last updated on December 2016 **www.accossato.com/accessori-moto/tubi-freno.html**

I KIT TUBI FRENO ACCOSSATO SONO FORNITI COMPLETI DI PARTE ANTERIORE E POSTERIORE
Accossato brake line kits encompass front&rear components

MARCA Brand	CC	MODELLO Model	ANNI / Years DA From	A To	NR. TUBI Hoses N°	LAYOUT	CODICE Reference
KAWASAKI	900	ZX9R NINJA ZX900 C1 - C2	1998	1999	4	S	AGF4523
KAWASAKI	900	ZX9R NINJA ZX900 C1 - C2	1998	1999	3	F	AGF4524
KAWASAKI	900	ZX9R NINJA ZX900 E1 - E2	2000	2001	3	F	AGF4528
KAWASAKI	900	ZX9R NINJA ZX900 E1 - E2	2000	2001	4	S	AGF4678
KAWASAKI	900	ZX9R NINJA ZX900 F1P - F2P	2002	2005	3	F	AGF4682
KAWASAKI	1000	GPZ1000RX A1 - A3	1985	1989	1	C	AGC4096
KAWASAKI	1000	GPZ1000RX ZX1000 A1 - A3	1985	1988	6	S	AGF4096
KAWASAKI	1000	GTR1000 A1-A14	1986	1999	1	C	AGC4188
KAWASAKI	1000	GTR1000 ZG1000 A1-A4	1986	1989	4	S	AGF4188
KAWASAKI	1000	GTR1000 ZG1000 A5-A14	1990	1999	4	S	AGF4717
KAWASAKI	1000	KLV1000	2004	2006	4	S	AGF4673
KAWASAKI	1000	KLV1000	2004	2006	3	F	AGF4674
KAWASAKI	1000	KZ1000 D1	1978		2	S	AGF4279
KAWASAKI	1000	RX1000	1985	1989	5	S	AGF4712
KAWASAKI	1000	Z1000	2003	2006	3	O	AGF4635
KAWASAKI	1000	Z1000	2003	2006	3	F	AGF4636
KAWASAKI	1000	Z1000	2007	2009	3	O	AGF4715
KAWASAKI	1000	Z1000	2007	2009	3	F	AGF4716
KAWASAKI	1000	Z1000	2010	2013	3	F	AGF4742
KAWASAKI	1000	Z1000	2010	2013	3	O	AGF4743
KAWASAKI	1000	Z1000	2014	2015	3	F	AGF4639
KAWASAKI	1000	Z1000 A1	1977		4	S	AGF4317
KAWASAKI	1000	Z1000 A2	1978		4	S	AGF4318
KAWASAKI	1000	Z1000 A3/A4	1979	1980	4	S	AGF4757
KAWASAKI	1000	Z1000 CSR KZ1000M	1980	1990	4	S	AGF4041
KAWASAKI	1000	Z1000 H	1980	1981	4	S	AGF4320
KAWASAKI	1000	Z1000 J	1977		4	S	AGF4321
KAWASAKI	1000	Z1000 J1	1981		4	S	AGF4322
KAWASAKI	1000	Z1000 J2 - J3	1981	1984	4	S	AGF4323
KAWASAKI	1000	Z1000 LTD	1979		4	S	AGF4761
KAWASAKI	1000	Z1000 LTD Z1000K1	1981	1983	4	S	AGF4326
KAWASAKI	1000	Z1000 MKII	1978	1981	4	S	AGF4329
KAWASAKI	1000	Z1000 R2 EDDIE LAWSON REPLICA	1983	1984	4	S	AGF4330
KAWASAKI	1000	Z1000 ST E1	1979		4	S	AGF4333
KAWASAKI	1000	Z1000 ST E2	1980		4	S	AGF4332
KAWASAKI	1000	Z1000 SX	2011	2015	3	F	AGF4754
KAWASAKI	1000	Z1R	1978		3	S	AGF4334
KAWASAKI	1000	ZL1000 A1 ELIMINATOR	1987	1990	4	S	AGF4448
KAWASAKI	1000	ZX10 B1 - B3	1988	1991	1	C	AGC4470
KAWASAKI	1000	ZX10 ZX1000 B1 - B3	1988	1991	4	S	AGF4470
KAWASAKI	1000	ZX10 ZX1000 B1 - B3	1988	1991	3	F	AGF4725
KAWASAKI	1000	ZX10R NINJA	2004	2005	3	O	AGF4651
KAWASAKI	1000	ZX10R NINJA	2004	2005	3	F	AGF4653
KAWASAKI	1000	ZX10R NINJA	2006	2007	3	F	AGF4694
KAWASAKI	1000	ZX10R NINJA	2006	2007	3	O	AGF4695
KAWASAKI	1000	ZX10R NINJA	2008	2010	3	O	AGF4723
KAWASAKI	1000	ZX10R NINJA	2008	2010	3	F	AGF4724
KAWASAKI	1000	ZX10R NINJA	2011	2015	3	F	AGF4749
KAWASAKI	1000	ZX10R ABS	2011	2015	6	S	AGA0050
KAWASAKI	1100	1100 ZR1100 A1 - B1 ZEPHYR	1992	1997	4	S	AGF4436
KAWASAKI	1100	1100 ZR1100 A1 - B1 ZEPHYR	1992	1997	1	C	AGC4436
KAWASAKI	1100	GPZ1100 Z1100 A1 - A2	1983	1984	6	S	AGF4099
KAWASAKI	1100	GPZ1100 Z1100 A3 NON ABS	1985	1985	4	S	AGF4101
KAWASAKI	1100	GPZ1100 Z1100 B1 - B2	1981	1982	4	S	AGF4102
KAWASAKI	1100	GPZ1100S ZX1100 E1 - E2 NON ABS	1995	1999	4	S	AGF4104
KAWASAKI	1100	Z1100 A1 - A4	1981	1983	4	S	AGF4335
KAWASAKI	1100	Z1100 R1 EDDIE LAWSON REPLICA	1984	1986	4	S	AGF4339
KAWASAKI	1100	ZL1100 CUSTOM	1987		3	S	AGF4452
KAWASAKI	1100	ZL1100 CUSTOM			1	C	AGC4452
KAWASAKI	1100	ZRX1100 C1 - C4	1997	2001	4	S	AGF4459

TUBI FRENO BRAKE LINES

AGGIORNATO A DICEMBRE 2016 / last updated on December 2016 **www.accossato.com/accessori-moto/tubi-freno.html**

I KIT TUBI FRENO ACCOSSATO SONO FORNITI COMPLETI DI PARTE ANTERIORE E POSTERIORE
Accossato brake line kits encompass front&rear components

MARCA Brand	CC	MODELLO Model	ANNI / Years DA From	ANNI / Years A To	NR. TUBI Hoses N°	LAYOUT	CODICE Reference
KAWASAKI	1100	ZRX1100 C1 - C4	1997	2001	3	F	AGF4460
KAWASAKI	1100	ZRX1100 C1 - C4	1997	2002	1	C	AGC4460
KAWASAKI	1100	ZX1100 A1	1982	1983	6	S	AGF4474
KAWASAKI	1100	ZX1100 A2	1984	1989	6	S	AGF4475
KAWASAKI	1100	ZX1100 C1	1990	1995	4	S	AGF4476
KAWASAKI	1100	ZZR1100 ZX1100 C1 - C3	1990	1992	4	S	AGF4560
KAWASAKI	1100	ZZR1100 ZX1100 C1 - C3	1990	1992	3	F	AGF4561
KAWASAKI	1100	ZZR1100 ZX1100 C1 - D9	1990	2001	1	C	AGC4560
KAWASAKI	1100	ZZR1100 ZX1100 D1 - D9	1992	2001	4	S	AGF4566
KAWASAKI	1100	ZZR1100 ZX1100 D1 - D9	1992	2001	3	F	AGF4567
KAWASAKI	1200	ZRX1200 A1 - A3P	2001	2005	4	S	AGF4659
KAWASAKI	1200	ZRX1200 A1 - A3P	2001	2005	3	F	AGF4660
KAWASAKI	1200	ZRX1200R A1 - A3P	2001	2006	4	S	AGF4644
KAWASAKI	1200	ZRX1200R A1 - A3P	2001	2006	3	F	AGF4645
KAWASAKI	1200	ZRX1200R A1 - A3P	2001	2006	1	C	AGC4461
KAWASAKI	1200	ZRX1200S B1 - B3P	2001	2005	3	F	AGF4610
KAWASAKI	1200	ZRX1200S B1 - B3P	2001	2005	4	S	AGF4611
KAWASAKI	1200	ZX12R NINJA ZX1200 A1 - A2 B1H - B2H C1H - C2H	1999	2003	4	S	AGF4477
KAWASAKI	1200	ZX12R NINJA ZX1200 A1 - A2 B1H - B2H C1H - C2H	1999	2003	3	F	AGF4478
KAWASAKI	1200	ZX12R NINJA ZX1200 R	2003	2006	3	F	AGF4637
KAWASAKI	1200	ZX12R NINJA ZX1200 R	2003	2006	3	O	AGF4638
KAWASAKI	1200	ZZR1200 ZX1200	2002	2006	4	S	AGF4631
KAWASAKI	1200	ZZR1200 ZX1200	2002	2006	3	F	AGF4632
KAWASAKI	1200	ZZR1200 ZX1200	2002	2006	1	C	AGC4631
KAWASAKI	1300	KZ1300 B2 US IMPORT	1980		4	S	AGF4280
KAWASAKI	1300	Z1300 A1 - A2	1979	1980	4	S	AGF4342
KAWASAKI	1300	Z1300 A3 - A5	1981	1984	4	S	AGF4344
KAWASAKI	1300	ZG1300 A1 - A3	1987	1990	4	S	AGF4442
KAWASAKI	1400	ZZR1400	2006	2015	1	C	AGC4696
KAWASAKI	1400	ZZR1400 ZX14	2006	2014	3	O	AGF4697
KAWASAKI	1400	ZZR1400 ZX14	2006	2014	3	F	AGF4702
KAWASAKI	1500	VN1500 B2 - B6 VULCAN C1 - C2 CLASSIC	1988	1996	1	S	AGF4283
KAWASAKI	1500	VN1500 CLASSIC D1-D2 E1 J1-J2 DRIFTER	1996	1999	1	C	AGC4293
KAWASAKI	1500	VN1500 CLASSIC D1-D2 E1 J1-J2 DRIFTER	1999	2003	1	C	AGC4300
KAWASAKI	1500	VN1500 D1 - D2 E1 CLASSIC J1 - J2 DRIFTER	1996	1999	1	S	AGF4293
KAWASAKI	1500	VN1500 E2 CLASSIC G1 - G2 L1 - L2 NOMAD	1998	1999	3	S	AGF4290
KAWASAKI	1500	VN1500 VULCAN	1996	2003	4	S	AGF4300
KAWASAKI	1600	VN1600 CLASSIC	2004	2007	4	S	AGF4657
KAWASAKI	1600	VN1600 CLASSIC TOURER	2004	2007	1	C	AGC4658
KAWASAKI	1600	VN1600 CLASSIC TOURER FI	2004	2007	4	S	AGF4658
KAWASAKI	1600	VN1600 MEAN STREAK	2004	2007	4	S	AGF4656
KAWASAKI	1600	VN1600 MEAN STREAK	2004	2007	3	F	AGF4680
KAWASAKI	1600	VN1600 MEANSTREAK	2004	2007	1	C	AGC4656
KAWASAKI	2000	VN2000	2004	2007	4	S	AGF4655
KAWASAKI		H1B - H1F	1972	1973	2	S	AGF4727
KAWASAKI		Z1 Z1A Z1B	1973	1975	4	S	AGF4319
KAWASAKI		Z1A (SINGLE DISC)	1973	1975	3	S	AGF4316
KAWASAKI		KH100 G5 - G8	1984	1993	1	S	AGF4737
KEEWAY	250	LANDCRUSIER 250	2004	2005	2	S	AGF4850
KSR	50	50 / 110	2004	2005	2	S	AGF4800
KTM	65	65 SX	2004	2012	2	S	AGF5026
KTM	65	65 SX	2014	2015	1	S	AGF5050
KTM	85	85 BIG WHEEL	2005	2006	2	S	AGF5020
KTM	85	85 SX	2003		2	S	AGF5027
KTM	85	85 SX	2004	2008	2	S	AGF5025
KTM	85	85 SX	2013	2015	2	S	AGF5041
KTM	125	125 / 150 / 250 / 350 / 450 SX - SX-F	2009	2015	2	S	AGF5000
KTM	125	125 DUKE	2011	2012	1	S	AGF5030
KTM	125	125 EXC	2000	2005	2	S	AGF5012
KTM	125	125 EXC - 500 EXC	2013	2015	1	S	AGF5001

TUBI FRENO BRAKE LINES

AGGIORNATO A DICEMBRE 2016 / last updated on December 2016 **www.accossato.com/accessori-moto/tubi-freno.html**

I KIT TUBI FRENO ACCOSSATO SONO FORNITI COMPLETI DI PARTE ANTERIORE E POSTERIORE
Accossato brake line kits encompass front&rear components

MARCA Brand	CC	MODELLO Model	ANNI / Years DA From	ANNI / Years A To	NR. TUBI Hoses N°	LAYOUT	CODICE Reference
KTM	125	125 EXC - 530 EXC	2004	2008	2	S	AGF5031
KTM	125	125 SX	2000	2005	2	S	AGF5010
KTM	125	125 SX - 525 SX	2000	2008	2	S	AGF5029
KTM	200	200 SX	2000	2005	2	S	AGF5011
KTM	250	250 EXC	2000	2005	2	S	AGF5013
KTM	250	250 EXC RACING	2000	2005	2	S	AGF5004
KTM	250	250 SX	2000	2005	2	S	AGF5007
KTM	250	FREERIDE 250 & 350	2012	2016	2	S	AGF5023
KTM	250	250 SX-F	2016	-	1	C	AGC5003
KTM	250	250 SX / 250 SXF	2011	2014	2	S	AGA0014
KTM	300	300 EXC	1998	2006	1	S	AGF5033
KTM	350	350 EXC	2007	2011	1	S	AGF5037
KTM	350	350 XCF	2007	2013	2	S	AGF5039
KTM	380	380 SX SUPERMOTO	1999	2006	1	S	AGF5021
KTM	400	400 EXC RACING	2000	2005	2	S	AGF5005
KTM	450	450 EXC RACING	2000	2005	2	S	AGF5006
KTM	450	450 SX	2000	2005	2	S	AGF5008
KTM	525	525 EXC	2003	2007	2	S	AGF5022
KTM	525	525 EXC	2003	2007	1	C	AGC5022
KTM	525	525 SX	2003	2006	2	S	AGF5009
KTM	620	620 DUKE	1994	1998	1	S	AGF5036
KTM	625	625 SMC	2002	2006	2	S	AGF5024
KTM	640	640 DUKE	1995	2003	2	S	AGF5019
KTM	640	640 DUKE	2003	2005	2	S	AGF5017
KTM	640	640 LC4	2000	2005	2	S	AGF5015
KTM	640	640 LC4 ADVENTURER	2000	2005	3	O	AGF5016
KTM	660	660 SMC	2003	2006	2	S	AGF5018
KTM	950	950 ADVENTURER	2000	2005	3	O	AGF5002
KTM	990	990 ADVENTURER	2008	2009	3	S	AGF5032
KTM	990	990 DUKE	2000	2005	2	S	AGF5014
KTM	990	990 SMR / SMT	2009	2011	3	F	AGF5038
KTM	990	990 SMR / SMT	2009	2011	5	S	AGF5042
KTM	990	990 SUPER DUKE	2004	2006	3	S	AGF5035
KTM	990	990 SUPER DUKE	2004	2006	1	C	AGC5035
KTM	990	990 SUPER DUKE	2007	2010	3	F	AGF5034
KTM	990	990 R SUPER DUKE	2011	2012	2	F	AGF5043
KTM	1190	RC8 / R	2009	2011	3	F	AGF5040
KTM		125 / 150 / 250 / 350 / 450 SX - SX-F	2009	2015	1	C	AGC5000
KTM		450 EXC SX125	2003	2007	1	C	AGC5005
KTM		RC8 / R	2009	2011	1	C	AGC5040
KTM		XC-F250 & XCF-W250	2009	2016	1	C	AGC5028
KTM		FREERIDE 250 & 350	2012	2016	1	C	AGC5023
KYMCO	125	AGILITY 125			1	S	AGF5452
KYMCO	125	PEOPLE 125	2004	2005	1	S	AGF5450
KYMCO	250	QUAD : 250R	2005		5	S	AGF5451
KYMCO		QUAD : QUADRUNNER			4	S	AGF5453
LAMBRETTA		DISC BRAKE MODEL UPGRADE			1	S	AGF5475
LAVERDA	500	500 MONTJUIC	1979	1983	4	S	AGF5508
LAVERDA	500	500 SPORT	1983	1984	4	S	AGF5513
LAVERDA	500	500 STANDARD	1983	1984	4	S	AGF5515
LAVERDA	650	650 SPORT	1993	1997	3	S	AGF5558
LAVERDA	750	750 CAFÉ RACER	2000	2001	4	S	AGF5522
LAVERDA	750	750 FORMULA	1997	2002	4	S	AGF5518
LAVERDA	750	750 S STRIKE	1998	2001	4	S	AGF5531
LAVERDA	750	750 S SUPER SPORT	2000	2001	4	S	AGF5532
LAVERDA	750	750 SS	1997	2002	4	S	AGF5517
LAVERDA	1000	JOTA 120	1978	1982	4	S	AGF5534
LAVERDA	1000	JOTA 180	1978	1982	4	S	AGF5536
LAVERDA	1000	RGA RGS 1000	1981	1986	4	S	AGF5543
LAVERDA	1000	RGA RGS 1000	1981	1986	1	C	AGC5543

TUBI FRENO BRAKE LINES

AGGIORNATO A DICEMBRE 2016 / last updated on December 2016 **www.accossato.com/accessori-moto/tubi-freno.html**

I KIT TUBI FRENO ACCOSSATO SONO FORNITI COMPLETI DI PARTE ANTERIORE E POSTERIORE
Accossato brake line kits encompass front&rear components

MARCA Brand	CC	MODELLO Model	ANNI / Years DA From	ANNI / Years A To	NR. TUBI Hoses N°	LAYOUT	CODICE Reference
LAVERDA	1000	RGS 1000 CORSA	1984	1986	4	S	AGF5546
LAVERDA	1000	RGS 1000 CORSA	1984	1986	1	C	AGC5546
LAVERDA	1000	RGS 1000 EXECUTIVE	1983	1984	4	S	AGF5549
LAVERDA	1000	SFC 1000 SPORTS	1985	1989	4	S	AGF5551
LAVERDA	1200	1200 SPORTS	1978	1982	4	S	AGF5500
LAVERDA	1200	1200 TS	1980	1982	4	S	AGF5505
LAVERDA	1200	FORMULA MIRAGE 1200	1982		4	S	AGF5557
LAVERDA	1200	MIRAGE 1200	1978	1979	4	S	AGF5542
LAVERDA	1200	MIRAGE 1200	1978	1979	1	C	AGC5542
LAVERDA		JOTA 120 / 180	1978	1982	1	C	AGC5534
LAVERDA		SFC	1976		4	S	AGF5556
LEXMOTO		VENOM EFI	2016	-	3	S	AGF7500
LML	125	125 / 151 / 200CC	2016	-	1	S	AGF2901
MAICO		MOTO CROSS	1985		1	S	AGF5700
MAICO		MOTO CROSS	1986		1	S	AGF5701
MONTESA		315R TRIALS	2001	2004	2	S	AGF8600
MONTESA		315R TRIALS	2001	2004	1	C	AGC8600
MOTO GUZZI	350	V35 MK II - MK III	1984	1988	4	S	AGF5825
MOTO GUZZI	500	V50 MK II	1979	1983	3	S	AGF5833
MOTO GUZZI	500	V50 MK III	1984	1986	4	S	AGF5838
MOTO GUZZI	500	V50 MONZA MK I - MK II	1981	1983	3	S	AGF5841
MOTO GUZZI	500	V50 MONZA MK III	1984	1986	3	S	AGF5842
MOTO GUZZI	650	V65 LARIO	1985	1988	4	S	AGF5844
MOTO GUZZI	650	V65 SP	1985		4	S	AGF5852
MOTO GUZZI	650	V65 TT	1985	1988	3	S	AGF5848
MOTO GUZZI	750	750 S	1975		3	S	AGF5861
MOTO GUZZI	750	750 S3	1976		4	S	AGF5800
MOTO GUZZI	750	750 TARGA	1990	1994	3	S	AGF5849
MOTO GUZZI	850	850 LE MANS MK II - MK III	1979	1985	4	S	AGF5815
MOTO GUZZI	850	850 LE MANS MKI	1978	1979	4	S	AGF5814
MOTO GUZZI	850	850 T3 MK I - MK II	1976	1977	5	S	AGF5801
MOTO GUZZI	850	850 T4	1980	1983	4	S	AGF5803
MOTO GUZZI	850	850 T5	1983	1988	4	S	AGF5807
MOTO GUZZI	1000	1000 (IE DAYTONA RS)	1992	2000	3	S	AGF5855
MOTO GUZZI	1000	1000 (IE DAYTONA)	1992	2000	3	S	AGF5856
MOTO GUZZI	1000	1000 LE MANS MK IV - MK V	1985	1994	4	S	AGF5817
MOTO GUZZI	1000	1000 MILLE GT	1971		2	S	AGF5818
MOTO GUZZI	1000	1000 MILLE GT	1988	1991	4	S	AGF5860
MOTO GUZZI	1000	1000 SPADA MK I - MK II	1980	1988	4	S	AGF5820
MOTO GUZZI	1000	1000 SPADA MK III	1989	1995	4	S	AGF5859
MOTO GUZZI	1000	CALIFORNIA III	1988	1993	4	S	AGF5850
MOTO GUZZI	1000	MISTRAL SP 1000	1982		4	S	AGF5819
MOTO GUZZI	1000	SP1000 NT	1981		4	S	AGF5851
MOTO GUZZI	1100	1100 SPORT (CARB)	1994	1996	3	S	AGF5853
MOTO GUZZI	1100	1100 SPORT (INJECTION)	1996	1999	3	S	AGF5854
MOTO GUZZI		BREVA	2003	2008	4	S	AGF5857
MOTO GUZZI		BREVA	2003	2008	3	F	AGF5858
MOTO MORINI	350	3.5	1979		3	S	AGF5877
MOTO MORINI	501	501 CAMEL SAHARA	1989		2	S	AGF5878
MOTO MORINI		CORSARA	2010		1	C	AGC5875
MOTO MORINI		CORSARO	2010		4	S	AGF5875
MOTO MORINI		CORSARO	2010		3	F	AGF5876
MV AGUSTA	898	BRUTALE 898	2011	2013	3	F	AGA0044
MV AGUSTA		BRUTALE	2000	2005	4	S	AGF5903
MV AGUSTA		BRUTALE	2006	2007	4	S	AGF5904
MV AGUSTA		F4 S F4 S-1 F4 SPR F4 SPR SENNA	2000	2005	3	F	AGF5901
MV AGUSTA		F4 S F4 S-1 F4 SPR F4 SPR SENNA	2000	2005	0	S	AGF5902
MV AGUSTA		MONZA	1979		4	S	AGF5900
MV AGUSTA		F4 S F4 S-1 F4 SPR F4 SPR SENNA	2000	2005	1	C	AGC5901
MZ	660	MASTIFF / BAGHIRA 660CC	1998	2007	2	S	AGF9990

TUBI FRENO BRAKE LINES

AGGIORNATO A DICEMBRE 2016 / last updated on December 2016 **www.accossato.com/accessori-moto/tubi-freno.html**

I KIT TUBI FRENO ACCOSSATO SONO FORNITI COMPLETI DI PARTE ANTERIORE E POSTERIORE
Accossato brake line kits encompass front&rear components

MARCA Brand	CC	MODELLO Model	ANNI / Years DA From	ANNI / Years A To	NR. TUBI Hoses N°	LAYOUT	CODICE Reference
NORTON	750	COMMANDO 750			1	S	AGF6002
NORTON	750	ROADSTER 750	1972		1	S	AGF6019
NORTON	850	COMMANDO 850 MKIII	1975		3	S	AGF6003
NORTON	850	COMMANDO 850 MKIII	1976		2	S	AGF6004
NORTON		BETA TR 34	1987		2	S	AGF6000
NORTON		COMMANDO	1973		1	S	AGF6001
NORTON		COMMANDO MKII	1976		2	S	AGF6005
NORTON		COMMANDO MKIIA	1973		1	S	AGF6006
NORTON		COMMANDO MKIIA	1974		1	S	AGF6007
NORTON		COMMANDO MKIII	1975	1978	3	S	AGF6008
NORTON		COMMANDO MKIII INTERSTATE	1975	1978	3	S	AGF6020
NORTON		COMMANDO ROADSTER	1972		2	S	AGF6009
NORTON		COMMANDO ROTARY			3	S	AGF6010
NORTON		F1 / F1 SPORT / F1 JPS RACING	1988	1993	3	S	AGF6011
PEUGEOT	50	ELYSEO 50	2000	2007	1	S	AGF6517
PEUGEOT	50	SPEEDFIGHT 1 50CC - 100CC	1997	2007	2	S	AGF6500
PEUGEOT	50	SPEEDFIGHT 2 50CC - 100CC	2001	2007	2	S	AGF6515
PEUGEOT	100	ELYSEO 100	2000	2007	1	S	AGF6518
PEUGEOT	125	ELYSEO 125	2000	2007	1	S	AGF6519
PEUGEOT	150	ELYSEO 150	2000	2007	2	S	AGF6516
PIAGGIO	50	NRG EXTREME	1997	2002	2	S	AGF6725
PIAGGIO	125	VESPA ET 4 125	1996	2007	1	S	AGF6730
PIAGGIO	500	B500			1	S	AGF6729
PIAGGIO		T5	1998	2002	1	S	AGF6727
PIAGGIO		VESPA PX	1996	2007	1	S	AGF6728
PIAGGIO		ZIP	1997	2007	1	S	AGF6726
PIAGGIO		FLY	2005	2009	1	S	AGF6731
QUASAR		QUASAR	1977	1983	4	S	AGF6740
ROYAL ENFIELD	500	CLASSIC 500 EFI	2011	2014	1	S	AGF6752
ROYAL ENFIELD	500	ELECTRA 500 EFI	2011	2014	1	S	AGF6757
ROYAL ENFIELD	535	CONTINENTAL GT 535	2013	2014	2	S	AGF6754
ROYAL ENFIELD		BULLET	2011	2014	1	S	AGF6751
ROYAL ENFIELD		ELECTRA	2011	2014	1	S	AGF6753
ROYAL ENFIELD		ELECTRA X	2004	2008	1	S	AGF6750
SACHS	125	125 MADMAN	2008	2011	2	S	AGF6756
SACHS	125	XTC125	2000	2008	2	S	AGF6755
SAUBER	500	GP500 FRONT LINE KIT 2 LINE	2001	2002	2	F	AGF6800
SAUBER	500	GP500 FRONT LINE KIT 3 LINE	2001	2002	3	S	AGF6801
SCOMADI	250	TL250S	2009	2010	2	S	AGF6850
SHERCO	80	80 / 125 / 200 / 250 / 290 / 320	1999	2010	1	S	AGF6860
SUZUKI	50	AP50	1996	2002	1	S	AGF7664
SUZUKI	50	ZR50 SKE - SKX	1983	1985	1	S	AGF7595
SUZUKI	50	ZR50 SLKX CUSTOM	1981	1982	1	S	AGF7601
SUZUKI	50	TR50 STREET MAGIC	1998	2000	1	S	AGF7013
SUZUKI	80	RM80	1986	2003	2	S	AGF7623
SUZUKI	80	RM80	2004	2005	2	S	AGF7686
SUZUKI	85	RM85	2010		2	S	AGF7833
SUZUKI	100	GP100 X - ED	1981	1991	1	S	AGF7045
SUZUKI	125	125 FU	1993		2	S	AGF7001
SUZUKI	125	ADDRESS 125	2008		1	S	AGF7762
SUZUKI	125	DR125 SD - SE	1983	1985	1	S	AGF7007
SUZUKI	125	DR125 SF - SJ RAIDER	1985	1994	1	S	AGF7009
SUZUKI	125	DR125SM	2008	2012	2	S	AGF7760
SUZUKI	125	GN125	1998		1	S	AGF7770
SUZUKI	125	GP125 D	1983	1989	1	S	AGF7051
SUZUKI	125	GP125 N (RE INTRO 79-82 MODELS)	1985	1986	1	S	AGF7058
SUZUKI	125	GP125 X - D	1982	1989	1	S	AGF7060
SUZUKI	125	GS125 ESZ - ESX	1982	2000	1	S	AGF7068
SUZUKI	125	GS125 S KATANA	1980		2	S	AGF7077
SUZUKI	125	GT125 L - B	1974	1977	1	S	AGF7393

TUBI FRENO BRAKE LINES

AGGIORNATO A DICEMBRE 2016 / last updated on December 2016 **www.accossato.com/accessori-moto/tubi-freno.html**

I KIT TUBI FRENO ACCOSSATO SONO FORNITI COMPLETI DI PARTE ANTERIORE E POSTERIORE
Accossato brake line kits encompass front&rear components

MARCA Brand	CC	MODELLO Model	ANNI / Years DA From	A To	NR. TUBI Hoses N°	LAYOUT	CODICE Reference
SUZUKI	125	RG125 F GAMMA	1991	1995	1	S	AGF7000
SUZUKI	125	RG125 FUN - FUR GAMMA	1991	1995	1	S	AGF7435
SUZUKI	125	RG125 UG - UJ GAMMA	1986	1991	1	S	AGF7440
SUZUKI	125	RM125	1988	1998	2	S	AGF7712
SUZUKI	125	RM125	1999	2006	2	S	AGF7685
SUZUKI	125	RM125	2007	2010	2	S	AGF7831
SUZUKI	125	TS125 RK - RR	1990	1996	2	S	AGF7516
SUZUKI	125	TS125 XF - XJ	1985	1989	1	S	AGF7523
SUZUKI	125	VL125 INTRUDER	2005	2008	1	S	AGF7749
SUZUKI	185	GT185 K - C	1973	1978	1	S	AGF7394
SUZUKI	250	250 ET - ET	1980		1	S	AGF7002
SUZUKI	250	GS250 TT - TX	1980	1981	1	S	AGF7078
SUZUKI	250	GSX250 ET - EX	1980	1981	1	S	AGF7223
SUZUKI	250	GSX250 EZ KATANA	1982		2	S	AGF7225
SUZUKI	250	GT250 A	1976		1	S	AGF7395
SUZUKI	250	GT250 B	1977		1	S	AGF7396
SUZUKI	250	GT250 C	1978		1	S	AGF7397
SUZUKI	250	GT250 EN - EX X7	1979	1982	1	S	AGF7398
SUZUKI	250	GT250 K	1973		1	S	AGF7399
SUZUKI	250	GT250 L	1974		1	S	AGF7400
SUZUKI	250	QUAD : LTZ250	2004	2006	3	S	AGF7689
SUZUKI	250	RG250 F GAMMA	1983	1983	1	S	AGF7004
SUZUKI	250	RG250 F GAMMA MK II	1984	1989	6	S	AGF7005
SUZUKI	250	RG250 FCH GAMMA	1987	1989	4	S	AGF7452
SUZUKI	250	RG250 FG - FH GAMMA	1985	1989	4	S	AGF7455
SUZUKI	250	RG250 WD MK I GAMMA	1983		4	S	AGF7459
SUZUKI	250	RG250 WE MK II GAMMA	1984		4	S	AGF7460
SUZUKI	250	RGV250 K - L	1989	1990	4	S	AGF7466
SUZUKI	250	RGV250 K - L	1989	1990	3	F	AGF7791
SUZUKI	250	RGV250 M - N	1991	1992	4	S	AGF7468
SUZUKI	250	RGV250 M - N	1991	1992	3	F	AGF7469
SUZUKI	250	RGV250 P - R	1993	1994	4	S	AGF7474
SUZUKI	250	RGV250 P - R	1993	1994	3	F	AGF7475
SUZUKI	250	RGV250 SP VJ23 IMPORT	1996	1998	3	O	AGF7690
SUZUKI	250	RGV250 VJ21	1988		4	S	AGF7840
SUZUKI	250	RM250	1976	1998	2	S	AGF7817
SUZUKI	250	RM250	1999	2004	2	S	AGF7687
SUZUKI	250	RM250	2008		1	S	AGF7672
SUZUKI	250	RMX250	1999	2005	2	S	AGF7696
SUZUKI	250	RMZ250	2004	2006	2	S	AGF7688
SUZUKI	250	RMZ250	2007	2013	2	S	AGF7043
SUZUKI	250	TS250 XG - XJ	1985	1989	1	S	AGF7531
SUZUKI	250	TU250X	1997	2000	1	S	AGF7792
SUZUKI	250	GN250	1987	1997	1	S	AGF7014
SUZUKI	350	DR350 SES - SEX	1995	1999	2	S	AGF7024
SUZUKI	350	DR350 SL - SR	1990	1994	2	S	AGF7019
SUZUKI	350	GOOSE 350	1991	1996	2	S	AGF7774
SUZUKI	380	GT380 J	1972		1	S	AGF7401
SUZUKI	380	GT380 K	1973		1	S	AGF7402
SUZUKI	380	GT380 L	1974		1	S	AGF7403
SUZUKI	380	GT380 M	1975		1	S	AGF7404
SUZUKI	400	AN400 BURGMAN	2004	2008	4	S	AGF7737
SUZUKI	400	DR-Z 400 SM	2004	2005	2	S	AGF7692
SUZUKI	400	DR-Z400 S	1999	2006	2	S	AGF7632
SUZUKI	400	DR-Z400 SM	2006	2008	2	S	AGF7738
SUZUKI	400	GN400 TT	1980	1982	1	S	AGF7042
SUZUKI	400	GS400 SINGLE DISC	1977	1980	2	S	AGF7082
SUZUKI	400	GSF400 M - R BANDIT SINGLE DISC	1991	1995	3	S	AGF7168
SUZUKI	400	GSF400 M - R BANDIT TWIN DISC	1991	1995	4	S	AGF7751
SUZUKI	400	GSF400 V - Y BANDIT	1996	2003	4	S	AGF7681

TUBI FRENO BRAKE LINES

AGGIORNATO A DICEMBRE 2016 / last updated on December 2016 **www.accossato.com/accessori-moto/tubi-freno.html**

I KIT TUBI FRENO ACCOSSATO SONO FORNITI COMPLETI DI PARTE ANTERIORE E POSTERIORE
Accossato brake line kits encompass front&rear components

MARCA Brand	CC	MODELLO Model	ANNI / Years DA From	ANNI / Years A To	NR. TUBI Hoses N°	LAYOUT	CODICE Reference
SUZUKI	400	GSX400 D	1986		4	S	AGF7229
SUZUKI	400	GSX400 E	1986		2	S	AGF7230
SUZUKI	400	GSX400 EX - EZ	1980	1985	2	S	AGF7231
SUZUKI	400	GSX400 FX NON ANTIDIVE	1981		4	S	AGF7237
SUZUKI	400	GSX400 FZ - FD ANTI DIVE	1982	1986	4	S	AGF7240
SUZUKI	400	GSX400 SSN KATANA	1992	1993	4	S	AGF7683
SUZUKI	400	GSX400 SSN KATANA	1992	1993	3	F	AGF7684
SUZUKI	400	GSX400 TX CUSTOM	1981	1985	1	S	AGF7243
SUZUKI	400	GSXR400 GK71B	1986	1987	6	S	AGF7807
SUZUKI	400	GSXR400 GK71F	1986	1987	3	S	AGF7803
SUZUKI	400	GSXR400 GK71F	1986	1987	2	F	AGF7804
SUZUKI	400	GSXR400 RRSP IMPORT	1987	1989	4	S	AGF7350
SUZUKI	400	QUAD : LTZ400	2003	2006	3	S	AGF7665
SUZUKI	400	QUAD : LTZ400 - ATV A ARMS	2006		4	S	AGF7736
SUZUKI	400	GSXR400R GK76A	1990	1992	3	F	AGF7342
SUZUKI	400	GSXR400R GK76A	1990	1992	4	S	AGF7341
SUZUKI	400	RG400 GAMMA	1985	1986	3	S	AGF7462
SUZUKI	425	GS425 SINGLE DISC	1977	1980	2	S	AGF7083
SUZUKI	450	GS450 EG - EJ	1985	1989	2	S	AGF7084
SUZUKI	450	RMZ450	2005	2008	2	S	AGF7735
SUZUKI	450	RMZ450	2009	2013	2	S	AGF7828
SUZUKI	500	GS500	2004	2008	2	S	AGF7675
SUZUKI	500	GS500 EK - ER	1989	1994	2	S	AGF7090
SUZUKI	500	GS500 ES - K2	1995	2002	2	S	AGF7097
SUZUKI	500	GS500F	2003	2008	2	S	AGF7676
SUZUKI	500	GT500 A	1975	1978	1	S	AGF7405
SUZUKI	500	RG500 G - CH GAMMA SPORTS	1985	1989	4	S	AGF7461
SUZUKI	550	GS550 D	1977	1978	3	S	AGF7808
SUZUKI	550	GS550 EN	1978	1979	4	S	AGF7780
SUZUKI	550	GS550 ET - EX	1980	1981	4	S	AGF7781
SUZUKI	550	GS550 EZ ANTIDIVE	1982	1985	6	S	AGF7107
SUZUKI	550	GS550 LT - LX	1980	1982	4	S	AGF7111
SUZUKI	550	GS550 MX KATANA	1981	1984	3	S	AGF7715
SUZUKI	550	GSX550 ESD / EE / ESE / EFE	1983	1984	6	S	AGF7248
SUZUKI	550	GSX550 ESE (NON ANTIDIVE)	1986	1986	4	S	AGF7704
SUZUKI	550	GSX550 ESE (NON ANTIDIVE)	1986	1986	3	F	AGF7705
SUZUKI	550	GT550 A	1976		1	S	AGF7835
SUZUKI	550	GT550 L-M	1974	1975	3	S	AGF7750
SUZUKI	600	DR600 RG PARIS DAKAR	1986	1987	1	S	AGF7030
SUZUKI	600	DR600 SF - RG RAIDER	1984	1987	1	S	AGF7032
SUZUKI	600	GSF600 K1 - K4 BANDIT	2001	2004	4	S	AGF7188
SUZUKI	600	GSF600 K1 - K4 BANDIT	2001	2004	3	F	AGF7189
SUZUKI	600	GSF600 S - T - X BANDIT	1995	2000	4	S	AGF7174
SUZUKI	600	GSF600 S - T - X BANDIT	1995	2000	3	F	AGF7175
SUZUKI	600	GSR600	2006	2010	3	F	AGF7726
SUZUKI	600	GSR600	2006	2010	3	O	AGF7727
SUZUKI	600	GSX600 F KATANA	2004	2005	4	S	AGF7700
SUZUKI	600	GSX600 F KATANA	2004	2005	3	F	AGF7701
SUZUKI	600	GSX600 FJ - FV	1988	1997	4	S	AGF7259
SUZUKI	600	GSX600 FJ - FV	1988	1997	3	F	AGF7607
SUZUKI	600	GSX600 FW - K4	1998	2004	4	S	AGF7268
SUZUKI	600	GSX600 FW - K4	1998	2004	3	F	AGF7616
SUZUKI	600	GSXR600 K1 - K3	2001	2003	3	F	AGF7363
SUZUKI	600	GSXR600 K1 - K3	2001	2003	3	O	AGF7364
SUZUKI	600	GSXR600 K4 - K5	2004	2005	3	F	AGF7679
SUZUKI	600	GSXR600 K4 - K5	2004	2005	3	O	AGF7680
SUZUKI	600	GSXR600 K6 - K7	2006	2007	3	F	AGF7728
SUZUKI	600	GSXR600 K6 - K7	2006	2007	3	O	AGF7729
SUZUKI	600	GSXR600 K8	2008	2008	3	F	AGF7771
SUZUKI	600	GSXR600 K8	2008	2008	3	O	AGF7797

TUBI FRENO BRAKE LINES

AGGIORNATO A DICEMBRE 2016 / last updated on December 2016 **www.accossato.com/accessori-moto/tubi-freno.html**

I KIT TUBI FRENO ACCOSSATO SONO FORNITI COMPLETI DI PARTE ANTERIORE E POSTERIORE
Accossato brake line kits encompass front&rear components

MARCA Brand	CC	MODELLO Model	ANNI / Years DA From	ANNI / Years A To	NR. TUBI Hoses N°	LAYOUT	CODICE Reference
SUZUKI	600	GSXR600 K9 - L0	2009	2010	3	O	AGF7800
SUZUKI	600	GSXR600 K9 - L0	2009	2010	3	F	AGF7801
SUZUKI	600	GSXR600 L1-L5	2011	2015	3	O	AGF7820
SUZUKI	600	GSXR600 L1-L5	2011	2015	3	F	AGF7821
SUZUKI	600	GSXR600 V - W	1997	1998	3	F	AGF7353
SUZUKI	600	GSXR600 V - W	1997	1998	3	O	AGF7354
SUZUKI	600	GSXR600 X - Y	1999	2000	3	F	AGF7359
SUZUKI	600	GSXR600 X - Y	1999	2000	3	O	AGF7360
SUZUKI	600	RF600 RP - RV	1993	1997	4	S	AGF7422
SUZUKI	600	RF600 RP - RV	1993	1997	3	F	AGF7720
SUZUKI	600	VS600 GLS - GLT INTRUDER	1995	1997	1	S	AGF7555
SUZUKI	650	BURGMAN 650 EXECUTIVE	2006	2008	6	S	AGF7748
SUZUKI	650	DL650 V-STROM	2003	2008	3	F	AGF7673
SUZUKI	650	DL650 V-STROM	2003	2008	3	O	AGF7699
SUZUKI	650	DR650	1996	2003	2	S	AGF7836
SUZUKI	650	DR650R SE	1991	2010	2	S	AGF7656
SUZUKI	650	DR650R SEP	1991	1994	3	S	AGF7691
SUZUKI	650	GS650 GTX - GTD	1981	1985	4	S	AGF7114
SUZUKI	650	GS650 GX KATANA	1981	1984	4	S	AGF7120
SUZUKI	650	GS650 GZ ANTIDIVE	1982	1984	6	S	AGF7124
SUZUKI	650	GS650G ANTI DIVE	1981		6	S	AGF7841
SUZUKI	650	GSF650 K5 - K8 BANDIT FAIRED	2005	2008	3	F	AGF7815
SUZUKI	650	GSF650 K5 - K8 BANDIT FAIRED	2005	2008	3	O	AGF7816
SUZUKI	650	GSF650 K5 - K8 BANDIT NAKED	2005	2008	3	O	AGF7709
SUZUKI	650	GSF650 K5 - K8 BANDIT NAKED	2005	2008	3	F	AGF7711
SUZUKI	650	GSF650 SA BANDIT	2007	2012	1	C	AGC7709
SUZUKI	650	GSF650S ABS BANDIT	2005	2006	7	S	AGF7708
SUZUKI	650	GSF650S ABS BANDIT	2007	2012	7	S	AGF7834
SUZUKI	650	GSX650F ABS K8-L5 7X LINE KIT	2008	2015	7	S	AGF7714
SUZUKI	650	GSX650F K8-L2 NON ABS	2008	2012	3	O	AGF7764
SUZUKI	650	GSX650F K8-L2 NON ABS	2008	2012	3	F	AGF7765
SUZUKI	650	LS650 FG - PJ - PT SAVAGE	1987	1998	1	S	AGF7408
SUZUKI	650	SFV650 GLADIUS K9-L4	2009	2014	3	F	AGF7812
SUZUKI	650	SFV650 GLADIUS K9-L4	2009	2014	3	O	AGF7813
SUZUKI	650	SV650 (NAKED)	2004	2004	4	S	AGF7809
SUZUKI	650	SV650 N K3 - K8	2003	2008	4	S	AGF7693
SUZUKI	650	SV650 N K3 - K8	2003	2008	3	F	AGF7694
SUZUKI	650	SV650 N K3 - K8	2003	2008	3	O	AGF7811
SUZUKI	650	SV650 N X - K2	1999	2002	4	S	AGF7484
SUZUKI	650	SV650 N X - K2	1999	2002	3	F	AGF7485
SUZUKI	650	SV650 SK3 - SK5 FAIRED MODEL	2003	2005	3	F	AGF7646
SUZUKI	650	SV650 SK6 - SK8 FAIRED MODEL	2006	2008	4	S	AGF7758
SUZUKI	650	SV650 SK6 - SK8 FAIRED MODEL	2006	2008	3	F	AGF7810
SUZUKI	650	SV650 SK9 - SK13 FAIRED MODEL	2009	2013	3	F	AGF7838
SUZUKI	650	SV650 SK9 - SK13 FAIRED MODEL	2009	2013	3	O	AGF7839
SUZUKI	650	SV650 SX - SK2 FAIRED MODEL	1999	2002	3	F	AGF7490
SUZUKI	650	SV650 SX - SK2 FAIRED MODEL	1999	2002	4	S	AGF7491
SUZUKI	650	XF650 V - Y FREEWIND	1997	2001	2	S	AGF7589
SUZUKI	650	XN85 TURBO	1983	1986	6	S	AGF7594
SUZUKI	750	DR750 S J - K DESERT EXPRESS DR BIG	1988	1989	2	S	AGF7037
SUZUKI	750	GS750	1977	1978	2	S	AGF7127
SUZUKI	750	GS750 B	1977		2	S	AGF7739
SUZUKI	750	GS750 D/DN/EN	1979		4	S	AGF7128
SUZUKI	750	GS750 DB	1977		4	S	AGF7129
SUZUKI	750	GS750 LX US IMPORT			3	S	AGF7130
SUZUKI	750	GSR750 L1-L6	2011	2016	3	F	AGF7826
SUZUKI	750	GSR750 L1-L6	2011	2016	3	O	AGF7827
SUZUKI	750	GSX750 EE / EF / ES ANTIDIVE	1984	1989	6	S	AGF7273
SUZUKI	750	GSX750 ESD ANTIDIVE	1983		6	S	AGF7278
SUZUKI	750	GSX750 ET - EX	1980	1981	4	S	AGF7784

ACCOSSATO

TUBI FRENO BRAKE LINES

AGGIORNATO A DICEMBRE 2016 / last updated on December 2016 **www.accossato.com/accessori-moto/tubi-freno.html**

I KIT TUBI FRENO ACCOSSATO SONO FORNITI COMPLETI DI PARTE ANTERIORE E POSTERIORE
Accossato brake line kits encompass front&rear components

MARCA Brand	CC	MODELLO Model	ANNI / Years DA From	ANNI / Years A To	NR. TUBI Hoses N°	LAYOUT	CODICE Reference
SUZUKI	750	GSX750 ET - EX	1980	1981	3	F	AGF7785
SUZUKI	750	GSX750 FK - FV	1989	1997	4	S	AGF7287
SUZUKI	750	GSX750 FK - FV	1989	1997	3	F	AGF7787
SUZUKI	750	GSX750 FW - FK5	1998	2005	4	S	AGF7299
SUZUKI	750	GSX750 FW - FK5	1998	2005	3	F	AGF7300
SUZUKI	750	GSX750 SE KATANA (NON FLIP UP)	1984		6	S	AGF7814
SUZUKI	750	GSX750 SF KATANA	1985	1986	4	S	AGF7285
SUZUKI	750	GSX750 SF KATANA	1985	1986	1	C	AGC7285
SUZUKI	750	GSX750 W - K1 RETRO	1997	2002	4	S	AGF7309
SUZUKI	750	GSXR750 / 3 JAPANESE IMPORT	1991		4	S	AGF7380
SUZUKI	750	GSXR750 / 3 JAPANESE IMPORT	1991		1	C	AGC7380
SUZUKI	750	GSXR750 F - H	1985	1987	4	S	AGF7365
SUZUKI	750	GSXR750 F - H	1985	1987	3	F	AGF7719
SUZUKI	750	GSXR750 F - H	1985	1987	1	C	AGC7365
SUZUKI	750	GSXR750 J - M	1988	1991	1	C	AGC7368
SUZUKI	750	GSXR750 J SLINGSHOT	1988		4	S	AGF7368
SUZUKI	750	GSXR750 J SLINGSHOT	1988		3	F	AGF7717
SUZUKI	750	GSXR750 K SLINGSHOT	1989		4	S	AGF7369
SUZUKI	750	GSXR750 K SLINGSHOT	1989		3	F	AGF7718
SUZUKI	750	GSXR750 K4 - K5	2004	2005	3	F	AGF7670
SUZUKI	750	GSXR750 K4 - K5	2004	2005	3	O	AGF7671
SUZUKI	750	GSXR750 K6 - K7	2006	2007	3	F	AGF7730
SUZUKI	750	GSXR750 K6 - K7	2006	2007	3	O	AGF7731
SUZUKI	750	GSXR750 K8	2008	2008	3	O	AGF7768
SUZUKI	750	GSXR750 K8	2008	2008	3	F	AGF7769
SUZUKI	750	GSXR750 K9 - L0	2009	2010	3	O	AGF7798
SUZUKI	750	GSXR750 K9 - L0	2009	2010	3	F	AGF7799
SUZUKI	750	GSXR750 L SLINGSHOT	1990		4	S	AGF7370
SUZUKI	750	GSXR750 L SLINGSHOT	1990		3	F	AGF7371
SUZUKI	750	GSXR750 L1 - L5	2011	2015	3	O	AGF7818
SUZUKI	750	GSXR750 L1 - L5	2011	2015	3	F	AGF7819
SUZUKI	750	GSXR750 M SLINGSHOT	1991		4	S	AGF7372
SUZUKI	750	GSXR750 M SLINGSHOT	1991		3	F	AGF7790
SUZUKI	750	GSXR750 T - W	1996	1998	3	F	AGF7381
SUZUKI	750	GSXR750 T - W	1996	1998	3	O	AGF7382
SUZUKI	750	GSXR750 WN - WP	1992	1993	4	S	AGF7373
SUZUKI	750	GSXR750 WR - WS	1994	1995	3	O	AGF7378
SUZUKI	750	GSXR750 WT	1996	1996	3	O	AGF7682
SUZUKI	750	GSXR750 X	1999		3	F	AGF7387
SUZUKI	750	GSXR750 X	1999		3	O	AGF7388
SUZUKI	750	GSXR750 Y - K3	2000	2003	3	F	AGF7391
SUZUKI	750	GSXR750 Y - K3	2000	2003	3	O	AGF7392
SUZUKI	750	GT750 (K L M A B) REPLACES THE METAL LINES FROM THE FRONT CALIPERS	1973	1977	4	S	AGF7406
SUZUKI	750	GT750 (K L M A B) RETAINS THE METAL LINES FROM THE FRONT CALIPERS	1973	1977	4	S	AGF7407
SUZUKI	750	VS750 GLPG - GLPM INTRUDER	1985	1991	1	S	AGF7559
SUZUKI	750	VS750 GLPG - GLPM INTRUDER	1985	1991	1	C	AGC7559
SUZUKI	779	DR800 S M - V DR BIG	1991	2000	2	S	AGF7039
SUZUKI	800	C800 INTRUDER	2001	2015	1	S	AGF7746
SUZUKI	800	DR800 S L DR BIG	1990	1990	2	S	AGF7041
SUZUKI	800	M50 (M800) BOULEVARD / INTRUDER	2011		2	S	AGF7822
SUZUKI	800	M800 INTRUDER	2006	2008	1	S	AGF7745
SUZUKI	800	M800 INTRUDER VZ800	2006	2008	1	S	AGF7585
SUZUKI	800	VS800 GL - GLV VOLUSIA	1991	1997	1	S	AGF7716
SUZUKI	800	VS800 GL - GLV VOLUSIA	1997	2004	1	S	AGF7802
SUZUKI	800	VX800 GLM - GLV ROADSTER	1991	1997	2	S	AGF7574
SUZUKI	800	VX800 GLM - GLV ROADSTER US / EURO IMPORT	1991	1996	2	S	AGF7566
SUZUKI	800	VZ800 INTRUDER	2007	2007	1	S	AGF7794
SUZUKI	800	VZ800 MARAUDER	1997	1998	1	S	AGF7584
SUZUKI	850	GS850 GN - GT	1979	1980	4	S	AGF7131
SUZUKI	850	GS850 GX - GG	1981	1988	4	S	AGF7132

TUBI FRENO BRAKE LINES

AGGIORNATO A DICEMBRE 2016 / last updated on December 2016 **www.accossato.com/accessori-moto/tubi-freno.html**

I KIT TUBI FRENO ACCOSSATO SONO FORNITI COMPLETI DI PARTE ANTERIORE E POSTERIORE
Accossato brake line kits encompass front&rear components

MARCA Brand	CC	MODELLO Model	ANNI / Years DA From	A To	NR. TUBI Hoses N°	LAYOUT	CODICE Reference
SUZUKI	900	RF900 RR - RW	1994	1998	4	S	AGF7428
SUZUKI	900	RF900 RR - RW	1994	1998	3	F	AGF7721
SUZUKI	900	RF900 RR - RW	1994	1998	1	C	AGC7428
SUZUKI	1000	DL1000 V-STROM	2002	2008	4	S	AGF7663
SUZUKI	1000	DL1000 V-STROM	2002	2008	3	F	AGF7695
SUZUKI	1000	DL1000 V-STROM	2002	2008	1	C	AGC7663
SUZUKI	1000	DL1000 V-STROM ABS	2014	2015	1	C	AGC7008
SUZUKI	1000	GS1000 E GS1000ET	1980	1984	4	S	AGF7062
SUZUKI	1000	GS1000 EN	1979		4	S	AGF7775
SUZUKI	1000	GS1000 ET - GT	1980	1984	4	S	AGF7776
SUZUKI	1000	GS1000 G	1980	1983	3	S	AGF7779
SUZUKI	1000	GS1000 L US IMPORT	1980		4	S	AGF7777
SUZUKI	1000	GS1000 S	1979		4	S	AGF7778
SUZUKI	1000	GSX1000 SZ - SD KATANA	1981	1985	6	S	AGF7200
SUZUKI	1000	GSXR1000 K1 - K2	2001	2002	3	F	AGF7314
SUZUKI	1000	GSXR1000 K1 - K2	2001	2002	3	O	AGF7315
SUZUKI	1000	GSXR1000 K3 - K4	2003	2004	3	O	AGF7630
SUZUKI	1000	GSXR1000 K3 - K4	2003	2004	3	F	AGF7631
SUZUKI	1000	GSXR1000 K5 - K6	2005	2006	3	O	AGF7706
SUZUKI	1000	GSXR1000 K5 - K6	2005	2006	3	F	AGF7707
SUZUKI	1000	GSXR1000 K7	2007	2007	3	O	AGF7752
SUZUKI	1000	GSXR1000 K7	2007	2007	3	F	AGF7753
SUZUKI	1000	GSXR1000 K7 - K8	2007	2008	1	C	AGC7752
SUZUKI	1000	GSXR1000 K8	2008	2008	3	O	AGF7772
SUZUKI	1000	GSXR1000 K8	2008	2008	3	F	AGF7773
SUZUKI	1000	GSXR1000 K9 - L1	2009	2011	3	F	AGF7795
SUZUKI	1000	GSXR1000 K9 - L1	2009	2011	3	O	AGF7796
SUZUKI	1000	GSXR1000 L2 - L5	2012	2015	3	O	AGF7829
SUZUKI	1000	GSXR1000 L2 - L5	2012	2015	3	F	AGF7830
SUZUKI	1000	GSX-S1000F & GSX-S1000 (NON ABS)	2015	2016	3	F	AGF7011
SUZUKI	1000	SV1000 N	2003	2006	3	O	AGF7637
SUZUKI	1000	SV1000 N	2003	2006	3	F	AGF7638
SUZUKI	1000	SV1000 TOP YOKE CONVERSION	2003	2006	3	S	AGF7639
SUZUKI	1000	SV1000J TOP YOKE CONVERSION	2003		1	C	AGC7639
SUZUKI	1000	SV1000S	2003	2007	1	C	AGC7666
SUZUKI	1000	SV1000S FAIRED MODEL	2003	2006	3	F	AGF7666
SUZUKI	1000	SV1000S FAIRED MODEL	2003	2006	3	O	AGF7667
SUZUKI	1000	TL1000R W-K2	1998	2002	3	F	AGF7496
SUZUKI	1000	TL1000R W-K2	1998	2002	3	O	AGF7497
SUZUKI	1000	TL1000R W-K2	1998	2002	1	C	AGC7496
SUZUKI	1000	TL1000S V-K1	1997	2001	3	F	AGF7504
SUZUKI	1000	TL1000S V-K1	1997	2001	3	O	AGF7505
SUZUKI	1100	GSX1100 EE - EG	1984	1988	4	S	AGF7205
SUZUKI	1100	GSX1100 ESD	1983	1985	6	S	AGF7207
SUZUKI	1100	GSX1100 ET - EX	1980	1981	4	S	AGF7210
SUZUKI	1100	GSX1100 EZ - SZ KATANA	1982		6	S	AGF7212
SUZUKI	1100	GSX1100 FJ - FR SPORTS TOURER POWER SCREEN	1988	1994	4	S	AGF7213
SUZUKI	1100	GSX1100 GM - GN	1991	1994	4	S	AGF7782
SUZUKI	1100	GSX1100 SD	1983		6	S	AGF7783
SUZUKI	1100	GSX1100F	1988	1994	1	C	AGC7213
SUZUKI	1100	GSXR1100 G - J	1986	1988	1	C	AGC7316
SUZUKI	1100	GSXR1100 G - H	1986	1987	4	S	AGF7316
SUZUKI	1100	GSXR1100 G - H	1986	1987	3	F	AGF7662
SUZUKI	1100	GSXR1100 J	1988		4	S	AGF7319
SUZUKI	1100	GSXR1100 J	1988		3	F	AGF7320
SUZUKI	1100	GSXR1100 K	1989		4	S	AGF7321
SUZUKI	1100	GSXR1100 K	1989		3	F	AGF7788
SUZUKI	1100	GSXR1100 K - N SLINGSHOT	1989	1992	1	C	AGC7321
SUZUKI	1100	GSXR1100 L	1990		4	S	AGF7322
SUZUKI	1100	GSXR1100 L	1990		3	F	AGF7323

TUBI FRENO BRAKE LINES

AGGIORNATO A DICEMBRE 2016 / last updated on December 2016 **www.accossato.com/accessori-moto/tubi-freno.html**

I KIT TUBI FRENO ACCOSSATO SONO FORNITI COMPLETI DI PARTE ANTERIORE E POSTERIORE
Accossato brake line kits encompass front&rear components

MARCA Brand	CC	MODELLO Model	ANNI / Years DA From	ANNI / Years A To	NR. TUBI Hoses N°	LAYOUT	CODICE Reference
SUZUKI	1100	GSXR1100 M	1991		4	S	AGF7324
SUZUKI	1100	GSXR1100 M	1991		3	F	AGF7825
SUZUKI	1100	GSXR1100 N	1992		4	S	AGF7325
SUZUKI	1100	GSXR1100 N	1992		3	F	AGF7789
SUZUKI	1100	GSXR1100 WP - WT	1993	1996	3	F	AGF7326
SUZUKI	1100	GSXR1100 WP - WT	1993	1996	3	O	AGF7327
SUZUKI	1100	GSXR1100 WP - WT	1993	1996	1	C	AGC7326
SUZUKI	1200	GSF1200 BANDIT CAM 2 LINE KIT	1996	2005	2		AGF7143
SUZUKI	1200	GSF1200 BANDIT CAM 3 LINE KIT	1996	2005	3		AGF7144
SUZUKI	1200	GSF1200 BANDIT CAM 4 LINE KIT	1996	2005	4		AGF7142
SUZUKI	1200	GSF1200 K1 - K5 BANDIT	2001	2005	3	F	AGF7621
SUZUKI	1200	GSF1200 K1 - K5 BANDIT	2001	2005	4	S	AGF7622
SUZUKI	1200	GSF1200 K1 - K5 BANDIT	2001	2005	1	C	AGC7621
SUZUKI	1200	GSF1200 K6 BANDIT	2006	2006	3	O	AGF7722
SUZUKI	1200	GSF1200 K6 BANDIT	2006	2006	1	C	AGC7722
SUZUKI	1200	GSF1200 K6 BANDIT	2006	2006	3	F	AGF7723
SUZUKI	1200	GSF1200 K6 BANDIT ABS	2006	2006	7	S	AGF7725
SUZUKI	1200	GSF1200 T - Y BANDIT	1996	2000	3	F	AGF7145
SUZUKI	1200	GSF1200 T - Y BANDIT	1996	2000	4	S	AGF7152
SUZUKI	1200	GSF1200 T-Y BANDIT	1996	2000	1	C	AGC7145
SUZUKI	1200	GSX1200 INAZUMA	1999	2000	4	S	AGF7805
SUZUKI	1200	GSX1200 INAZUMA	1999	2000	3	F	AGF7806
SUZUKI	1200	GSX1200 INAZUMA	1999	2000	1	C	AGC7805
SUZUKI	1250	GSF1250 K7 - L2 BANDIT	2007	2012	3	O	AGF7740
SUZUKI	1250	GSF1250 K7 - L2 BANDIT	2007	2012	3	F	AGF7741
SUZUKI	1250	GSF1250 SA ABS BANDIT	2007	2012	1	C	AGC7743
SUZUKI	1250	GSF1250 SA ABS K7 - L2 BANDIT	2007	2012	6	S	AGF7743
SUZUKI	1250	GSF1250 SA ABS K7 - L2 BANDIT	2007	2012	2	S	AGF7742
SUZUKI	1250	GSX1250FA L0-L4 ABS	2010	2014	7	S	AGF7837
SUZUKI	1250	GSX1250FA L0-L4 ABS	2010	2014	1	C	AGC7837
SUZUKI	1300	GSX1300 B-KING	2008	2012	2	O	AGF7756
SUZUKI	1300	GSX1300 B-KING	2008	2012	2	F	AGF7757
SUZUKI	1300	GSX1300 B-KING	2008	2012	1	C	AGC7757
SUZUKI	1300	GSX1300R HAYABUSA K8 - L2	2008	2012	1	C	AGC7767
SUZUKI	1300	GSX1300R K8 - L2 HAYABUSA	2008	2012	3	O	AGF7766
SUZUKI	1300	GSX1300R K8 - L2 HAYABUSA	2008	2012	3	F	AGF7767
SUZUKI	1300	GSX1300R L3-L5 HAYABUSA	2013	2015	1	C	AGC7768
SUZUKI	1300	GSX1300R RX - K3 / RZ HAYABUSA	1999	2007	1	C	AGC7766
SUZUKI	1300	GSX1300R RX - K7 HAYABUSA	1999	2007	3	S	AGF7336
SUZUKI	1300	GSX1300R RX - K7 HAYABUSA	1999	2007	3	F	AGF7604
SUZUKI	1400	GSX1400 K1 - K8	2001	2008	4	S	AGF7221
SUZUKI	1400	GSX1400 K1 - K8	2001	2008	3	F	AGF7222
SUZUKI	1400	GSX1400 K1 - K8	2001	2008	1	C	AGC7221
SUZUKI	1400	VS1400 GLPH - GLPV INTRUDER	1987	1999	2	S	AGF7538
SUZUKI	1400	VS1400 GLPH - GLPV INTRUDER	1987	1999	1	C	AGC7537
SUZUKI	1400	VS1400 GLPH - GLPV INTRUDER	1987	1999	1	S	AGF7537
SUZUKI	1500	VL1500 LC INTRUDER	1998	2004	1	C	AGC7713
SUZUKI	1500	VL1500 LC INTRUDER (SINGLE FRONT DISC)	1998	2001	2	S	AGF7713
SUZUKI	1500	VL1500 LC INTRUDER (TWIN DISC)	2002	2004	3	S	AGF7710
SUZUKI	1600	M1600 BOULEVARD	2004	2005	3	S	AGF7698
SUZUKI	1600	VS1600 INTRUDER	2004	2005	1	S	AGF7697
SUZUKI	1600	VZ1600 MARAUDER	2004	2005	4	S	AGF7677
SUZUKI	1600	VZ1600 MARAUDER	2004	2005	3	F	AGF7678
SUZUKI	1600	VZ1600 MARAUDER	2004	2005	1	C	AGC7677
SUZUKI	1800	M1800R INTRUDER	2006	2008	3	F	AGF7733
SUZUKI	1800	VZR1800 INTRUDER	2012		3	S	AGF7832
SUZUKI	1800	VZR1800 M109R BOULEVARD	2006	2008	3	F	AGF7732
SUZUKI	1800	VZR1800 M109R BOULEVARD - M1800R INTRUDER	2006	2008	4	S	AGF7755
SUZUKI		M90 BOULEVARD / INTRUDER	2011		3	S	AGF7823
SUZUKI		M90 BOULEVARD / INTRUDER	2011		3	O	AGF7824

TUBI FRENO BRAKE LINES

AGGIORNATO A DICEMBRE 2016 / last updated on December 2016 **www.accossato.com/accessori-moto/tubi-freno.html**

I KIT TUBI FRENO ACCOSSATO SONO FORNITI COMPLETI DI PARTE ANTERIORE E POSTERIORE
Accossato brake line kits encompass front&rear components

MARCA Brand	CC	MODELLO Model	ANNI / Years DA From	ANNI / Years A To	NR. TUBI Hoses N°	LAYOUT	CODICE Reference
SUZUKI		VAN VAN	2006	2008	1	S	AGF7744
SUZUKI		VOLTY IMPORT	1997	2000	1	S	AGF7793
TEMA		MOTOCROSS / ENDURO	2002		1	S	AGF7900
TEMA		MOTOCROSS ENDURO	2002		1	C	AGC7950
TM	250	250 EN	2003	2008	1	C	AGC7976
TM		MOTOCROSS	2002		2	S	AGF7925
TM		MOTORCROSS	2002		1	C	AGC7975
TRAXX	110	SKY 110	2010		1	S	AGF7950
TRAXX	125	FLY 125	2010		2	S	AGF7952
TRAXX	125	JOTO 125	2010		1	S	AGF7951
TRAXX	250	SHARK 250	2010		1	S	AGF7953
TRIUMPH	600	DAYTONA 600 / 650	2003	2005	3	F	AGF8132
TRIUMPH	600	DAYTONA 600 / 650	2003	2005	3	O	AGF8164
TRIUMPH	600	SPEED FOUR 600	2002	2005	3	O	AGF8144
TRIUMPH	600	SPEED FOUR 600	2002	2005	3	F	AGF8145
TRIUMPH	600	TT600	2000	2003	3	O	AGF8129
TRIUMPH	600	TT600	2000	2003	3	F	AGF8130
TRIUMPH	675	DAYTONA 675	2006	2008	3	O	AGF8142
TRIUMPH	675	DAYTONA 675	2006	2008	3	F	AGF8143
TRIUMPH	675	DAYTONA 675	2009	2010	3	O	AGF8172
TRIUMPH	675	DAYTONA 675	2009	2010	3	F	AGF8173
TRIUMPH	675	DAYTONA 675R	2011	2014	3	F	AGF8176
TRIUMPH	675	STREET TRIPLE 675	2007	2012	3	O	AGF8151
TRIUMPH	675	STREET TRIPLE 675	2007	2012	3	F	AGF8152
TRIUMPH	675	STREET TRIPLE 675	2013		3	F	AGF8185
TRIUMPH	675	STREET TRIPLE 675	2013		3	O	AGF8186
TRIUMPH	675	STREET TRIPLE R 675	2010	2011	3	F	AGF8170
TRIUMPH	675	STREET TRIPLE R 675	2010	2011	3	O	AGF8179
TRIUMPH	675	STREET TRIPLE R 675	2010	2011	3	F	AGF8180
TRIUMPH	750	BONNEVILLE 750 LOW BAR	1986		3	S	AGF8012
TRIUMPH	750	DAYTONA 750	1992	1993	4	S	AGF8181
TRIUMPH	750	SPEED TRIPLE 750	1997		4	S	AGF8184
TRIUMPH	750	T140 D US SPECIFICATION	1979		4	S	AGF8018
TRIUMPH	750	T140 E UK SPECIFICATION	1979		3	S	AGF8026
TRIUMPH	750	T140 E US SPECIFICATION	1980		3	S	AGF8019
TRIUMPH	750	T140 V	1975		4	S	AGF8020
TRIUMPH	750	T140 V	1978		3	S	AGF8021
TRIUMPH	750	T160 V	1975		4	S	AGF8022
TRIUMPH	800	TIGER 800 XC	2011		3	O	AGF8183
TRIUMPH	800	TIGER 800	2010	2014	3	O	AGF8187
TRIUMPH	800	TIGER 800	2010	2014	3	F	AGF8188
TRIUMPH	865	THRUXTON 900	2008		2	S	AGF8156
TRIUMPH	885	SPEED TRIPLE T509	1997	2007	3	O	AGF8081
TRIUMPH	885	SPEED TRIPLE T509	1997	2007	3	F	AGF8082
TRIUMPH	900	ADVENTURER THUNDERBIRD 900	1995	2003	2	S	AGF8169
TRIUMPH	900	ADVENTURER THUNDERBIRD SPORT 900	1995	2003	2	S	AGF8085
TRIUMPH	900	BONNEVILLE 900 SCRAMBLER	2004	2007	1	S	AGF8150
TRIUMPH	900	DAYTONA 900	1992	1997	4	S	AGF8013
TRIUMPH	900	DAYTONA 900	1991	1996	1	C	AGC8013
TRIUMPH	900	LEGEND TT	1998	2001	2	S	AGF8136
TRIUMPH	900	SCRAMBLER 900	2008		2	S	AGF8157
TRIUMPH	900	TIGER 900	1993	2000	4	S	AGF8024
TRIUMPH	900	TIGER 900	1993	2000	3	F	AGF8025
TRIUMPH	900	TRIDENT 900	1991		4	S	AGF8040
TRIUMPH	900	TRIDENT 900	1991		3	F	AGF8041
TRIUMPH	900	TRIDENT 900	1992	1998	4	S	AGF8042
TRIUMPH	900	TRIDENT 900	1992	1998	3	F	AGF8043
TRIUMPH	900	TROPHY 900 / 1200	1991	2002	4	S	AGF8063
TRIUMPH	900	TROPHY 900 / 1200	1991	2002	3	F	AGF8064
TRIUMPH	900	TROPHY 900 / 1200	1991	2002	3	O	AGF8174

TUBI FRENO BRAKE LINES

AGGIORNATO A DICEMBRE 2016 / last updated on December 2016 **www.accossato.com/accessori-moto/tubi-freno.html**

I KIT TUBI FRENO ACCOSSATO SONO FORNITI COMPLETI DI PARTE ANTERIORE E POSTERIORE
Accossato brake line kits encompass front&rear components

MARCA Brand	CC	MODELLO Model	ANNI / Years DA From	A To	NR. TUBI Hoses N°	LAYOUT	CODICE Reference
TRIUMPH	900	THUNDERBIRD SPORT 900	1997	2004	4	S	AGF8003
TRIUMPH	955	DAYTONA 955I	2001	2004	3	F	AGF8006
TRIUMPH	955	DAYTONA 955I	2001	2004	3	O	AGF8007
TRIUMPH	955	DAYTONA 955I	2005	2007	3	F	AGF8148
TRIUMPH	955	DAYTONA T595 (955I DAYTONA)	1997	2000	3	F	AGF8004
TRIUMPH	955	DAYTONA T595 (955I DAYTONA)	1997	2000	3	O	AGF8005
TRIUMPH	955	SPEED TRIPLE 955I	2002	2003	3	O	AGF8168
TRIUMPH	955	SPEED TRIPLE 955I	2002	2003	3	F	AGF8175
TRIUMPH	955	SPRINT RS	1999	2004	3	O	AGF8133
TRIUMPH	955	SPRINT RS	1999	2004	3	F	AGF8134
TRIUMPH	955	TIGER 955	2000	2003	3	F	AGF8127
TRIUMPH	955	TIGER 955	2000	2003	3	O	AGF8128
TRIUMPH	955	TIGER 955I	2004	2008	3	F	AGF8166
TRIUMPH	955	TIGER 955I	2004	2008	3	O	AGF8167
TRIUMPH	1000	DAYTONA 1000	1992	1993	4	S	AGF8182
TRIUMPH	1050	SPEED TRIPLE 1050	2005	2010	4	S	AGF8159
TRIUMPH	1050	SPEED TRIPLE 1050	2005	2010	3	F	AGF8171
TRIUMPH	1050	SPRINT ST 1050	2005	2010	3	O	AGF8153
TRIUMPH	1050	SPRINT ST 1050	2005	2010	3	F	AGF8154
TRIUMPH	1050	SPRINT ST 1050	2007	2010	3	O	AGF8177
TRIUMPH	1050	SPRINT ST 1050	2007	2010	3	F	AGF8178
TRIUMPH	1050	TIGER 1050	2007	2009	4	S	AGF8002
TRIUMPH	1200	DAYTONA 1200	1992	1997	4	S	AGF8126
TRIUMPH	2300	ROCKET III	2004	2010	4	S	AGF8137
TRIUMPH	2300	ROCKET III	2004	2010	3	F	AGF8138
TRIUMPH		AMERICA	2004	2007	2	S	AGF8140
TRIUMPH		AMERICA	2008	2009	2	S	AGF8155
TRIUMPH		BONNEVILLE T100	2000	2006	2	S	AGF8146
TRIUMPH		BONNEVILLE T100	2011	2014	2	S	AGF8200
TRIUMPH		BONNEVILLE T100	2007	2010	2	S	AGF8158
TRIUMPH		BONNEVILLE T100 SE MAG WHEEL	2010	2014	2	S	AGF8001
TRIUMPH		BONNEVILLE THRUXTON	2004	2010	1	S	AGF8149
TRIUMPH		SPEED TRIPLE	1994	1996	4	S	AGF8015
TRIUMPH		SPEED TRIPLE	1994	1996	1	C	AGC8015
TRIUMPH		SPEEDMASTER	2000	2002	2	S	AGF8139
TRIUMPH		SPEEDMASTER	2003	2010	3	S	AGF8162
TRIUMPH		SPEEDMASTER	2003	2010	3	F	AGF8163
TRIUMPH		SPRINT	1993	1997	4	S	AGF8056
TRIUMPH		SPRINT EXECUTIVE	1998	2003	3	F	AGF8141
TRIUMPH		SPRINT EXECUTIVE	1998	2003	4	S	AGF8165
TRIUMPH		SPRINT SPORT	1998	2003	3	O	AGF8091
TRIUMPH		SPRINT ST	1998	2004	3	O	AGF8092
TRIUMPH		SPRINT ST	1998	2004	3	F	AGF8135
TRIUMPH		THUNDERBIRD	1995	2003	2	S	AGF8000
TRIUMPH		THUNDERBIRD	2004	2009	2	S	AGF8131
TRIUMPH		THUNDERBIRD 900	1995	2000	1	C	AGC8131
TRIUMPH		TRIDENT 900	1992	1998	1	C	AGC8040
TRIUMPH		TRIDENT SPRINT SPORTS	1996		4	S	AGF8060
TRIUMPH		TRIDENT SPRINT SPORTS	1996		1	C	AGC8060
TRIUMPH		TROPHY 900 / 1200	1991	2002	1	C	AGC8063
TRIUMPH		TSS ELECTRO / BONNEVILLE LOW BAR			4	S	AGF8023
TRIUMPH		TSX 4			3	S	AGF8079
TRIUMPH		TSX 8			3	S	AGF8080
VESPA	300	GTS 300 SUPER SPORT	2012	2014	2	S	AGF8501
VESPA		DOUGLAS	1991		1	S	AGF8500
YAMAHA	50	CW50 BWS B-WHIZZ	1999	2004	1	S	AGF9638
YAMAHA	50	DT50	2004	2013	1	S	AGF9776
YAMAHA	50	YQ50 AEROX	1998	2003	2	S	AGF9613
YAMAHA	85	YZ85	2001	2010	2	S	AGF9498
YAMAHA	100	RS100	2004		1	S	AGF9653

TUBI FRENO BRAKE LINES

AGGIORNATO A DICEMBRE 2016 / last updated on December 2016 **www.accossato.com/accessori-moto/tubi-freno.html**

I KIT TUBI FRENO ACCOSSATO SONO FORNITI COMPLETI DI PARTE ANTERIORE E POSTERIORE
Accossato brake line kits encompass front&rear components

MARCA Brand	CC	MODELLO Model	ANNI / Years DA From	ANNI / Years A To	NR. TUBI Hoses N°	LAYOUT	CODICE Reference
YAMAHA	125	DT125 R	1988	2003	2	S	AGF9025
YAMAHA	125	DT125 X - SM	2004	2007	2	S	AGF9705
YAMAHA	125	NXC125 CYGNUS X	2004	2008	1	S	AGF9654
YAMAHA	125	QUAD : YFM125	2011	2012	4	S	AGF9769
YAMAHA	125	RD125 LC	1982	1989	1	S	AGF9132
YAMAHA	125	RDZ125			1	S	AGF9747
YAMAHA	125	TDR125	1993	1997	1	S	AGF9651
YAMAHA	125	TZ125			1	S	AGF9726
YAMAHA	125	TZR125	1987	1990	2	S	AGF9233
YAMAHA	125	TZR125	1991	1997	2	S	AGF9764
YAMAHA	125	TZR125 BELGARDA (BREMBO)	1987	1992	2	S	AGF9234
YAMAHA	125	WR125R	2008	2009	2	F	AGF9760
YAMAHA	125	WR125X	2008	2009	2	S	AGF9766
YAMAHA	125	X MAX 125	2006	2008	1	S	AGF9698
YAMAHA	125	X-MAX 125 XMAX NON ABS	2014	2016	2	S	AGF9102
YAMAHA	125	XT125	1982	1985	1	S	AGF9372
YAMAHA	125	XTZ125 E	2006	2010	1	S	AGF9741
YAMAHA	125	XV125 S VIRAGO	1997	2001	1	S	AGF9730
YAMAHA	125	YBR125	2006	2010	1	S	AGF9680
YAMAHA	125	YBR125	2008		1	S	AGF9718
YAMAHA	125	YBR125 CUSTOM	2008		1	S	AGF9717
YAMAHA	125	YP125R MAJESTY	1999	2007	1	S	AGF9655
YAMAHA	125	YZ125	1998	2004	2	S	AGF9493
YAMAHA	125	YZ125	2005	2010	2	S	AGF9650
YAMAHA	125	YZF-R125	2008	2013	2	S	AGF9719
YAMAHA	125	X-CITY 125	2008	2011	2	S	AGF9714
YAMAHA	125	YZF-R125	2014	2015	2	S	AGF9722
YAMAHA	125	WR125X	2010	2014	2	S	AGF9783
YAMAHA	125	YZ 125	2015	2016	2	S	AGA0046
YAMAHA	135	RDZ135	1991	1997	1	S	AGF9765
YAMAHA	150	YZF-R15 V1.0	2012	2012	1	S	AGF9519
YAMAHA	150	YZF-R15 V2.0	2012	2013	2	S	AGF9518
YAMAHA	180	DTN / DTZ 180	1985	1991	1	S	AGF9745
YAMAHA	180	RX180	1980	1985	1	S	AGF9748
YAMAHA	180	TDR180			1	S	AGF9749
YAMAHA	200	DT200	1980	2010	2	S	AGF9746
YAMAHA	200	QUAD : YFZ200 BLASTER	2003	2004	3	F	AGF9635
YAMAHA	200	QUAD : YFZ200 BLASTER	2005	2006	4	S	AGF9690
YAMAHA	200	RD200	1978	1983	1	S	AGF9139
YAMAHA	200	SDR200 IMPORT	1987	1990	2	S	AGF9190
YAMAHA	225	XT225	1980	1990	1	S	AGF9641
YAMAHA	250	QUAD : YFM250	2011	2012	4	S	AGF9770
YAMAHA	250	RD250 C	1976		1	S	AGF9152
YAMAHA	250	RD250 D	1977		2	S	AGF9153
YAMAHA	250	RD250 DX	1977		1	S	AGF9154
YAMAHA	250	RD250 DXD	1977		1	S	AGF9155
YAMAHA	250	RD250 E	1978		2	S	AGF9156
YAMAHA	250	RD250 F	1979		2	S	AGF9157
YAMAHA	250	RD250 LC	1980	1983	1	S	AGF9158
YAMAHA	250	RZ250	1983	1984	4	S	AGF9708
YAMAHA	250	SR250	1980	1996	1	S	AGF9194
YAMAHA	250	SRV250			1	S	AGF9707
YAMAHA	250	TDR250	1988	1992	2	S	AGF9216
YAMAHA	250	TT-R 250	1994		2	S	AGF9609
YAMAHA	250	TTR250	1995		1	S	AGF9706
YAMAHA	250	TZ250	1980	1990	2	S	AGF9727
YAMAHA	250	TZ250	1991	2000	3	S	AGF9728
YAMAHA	250	TZR250 2MA / 1KT	1986	1990	2	S	AGF9240
YAMAHA	250	TZR250 3MA (REVERSE CYLINDER)	1989	1990	3	S	AGF9242
YAMAHA	250	TZR250 3XV	1991	1996	3	S	AGF9241

TUBI FRENO BRAKE LINES

AGGIORNATO A DICEMBRE 2016 / last updated on December 2016 **www.accossato.com/accessori-moto/tubi-freno.html**

I KIT TUBI FRENO ACCOSSATO SONO FORNITI COMPLETI DI PARTE ANTERIORE E POSTERIORE
Accossato brake line kits encompass front&rear components

MARCA Brand	CC	MODELLO Model	ANNI / Years DA From	ANNI / Years A To	NR. TUBI Hoses N°	LAYOUT	CODICE Reference
YAMAHA	250	WR250	2001	2005	2	S	AGF9614
YAMAHA	250	WR250F	2007	2008	2	S	AGF9701
YAMAHA	250	WR250F	2004		2	S	AGF9716
YAMAHA	250	WR250F MOTORCROSS	2005	2006	2	S	AGF9647
YAMAHA	250	WR250R	2008	2009	2	S	AGF9720
YAMAHA	250	WR250X	2008	2009	2	S	AGF9723
YAMAHA	250	X MAX 250	2006	2006	2	S	AGF9676
YAMAHA	250	X MAX 250	2007	2008	2	S	AGF9699
YAMAHA	250	XS250 SE	1980	1985	1	S	AGF9337
YAMAHA	250	XT250 SEROW	2004	2005	2	S	AGF9724
YAMAHA	250	XTZ250 LEADER	2006	2010	2	S	AGF9743
YAMAHA	250	XTZ250 X	2006	2010	2	S	AGF9742
YAMAHA	250	XVS250 DRAGSTAR	2004	2005	1	S	AGF9631
YAMAHA	250	YP250 MAJESTY	1996	2004	1	S	AGF9691
YAMAHA	250	YS250 FAZER	2008	2010	1	S	AGF9744
YAMAHA	250	YZ250	1992	1995	2	S	AGF9492
YAMAHA	250	YZ250	1998	2003	2	S	AGF9495
YAMAHA	250	YZ250	1991	1991	1	S	AGF9494
YAMAHA	250	YZ250 / YZF250	2004	2010	2	S	AGF9640
YAMAHA	250	YZ250 / YZF250	2004	2011	2	S	AGF9649
YAMAHA	250	YZ250F YZF	2006	2008	2	S	AGF9682
YAMAHA	250	YZ250F YZF	2011	2016	2	S	AGF9758
YAMAHA	250	YZ250F YZF	2014	2016	2	S	AGF9431
YAMAHA	250	R1-Z 250	1990	1991	3	F	AGF9520
YAMAHA	250	XG250 TRICKER	2005	2016	2	S	AGF9007
YAMAHA	250	X-MAX 250 / 125R	2010	2013	2	S	AGA0016
YAMAHA	350	QUAD : YFZ350 BANSHEE	1989	2003	3	F	AGF9633
YAMAHA	350	QUAD : YFZ350X WARRIOR	1989	2003	3	F	AGF9618
YAMAHA	350	RD350 LC	1980	1983	3	S	AGF9164
YAMAHA	350	RD350 YPVS	1983	1996	4	S	AGF9184
YAMAHA	350	RD350A REPLACING METAL PIPE	1974		2	S	AGF9768
YAMAHA	350	RD350A RETAINING METAL PIPE	1974		2	S	AGF9767
YAMAHA	350	TX350 E	1978		2	S	AGF9232
YAMAHA	350	XT350	1985	1996	1	S	AGF9377
YAMAHA	400	FZ400 SPORTS	1985		4	S	AGF9058
YAMAHA	400	FZR400 GENESIS IMPORT	1985	1987	4	S	AGF9084
YAMAHA	400	FZR400RR	1992	1996	3	F	AGF9085
YAMAHA	400	FZR400RR	1992	1996	4	S	AGF9086
YAMAHA	400	FZR400RR SP	1991	1992	4	S	AGF9095
YAMAHA	400	RD400 C / D / E REPLACES BUNDY	1976	1978	2	S	AGF9612
YAMAHA	400	RD400 C / D / E RETAINS BUNDY	1978	1976	2	S	AGF9634
YAMAHA	400	RD400 E / F	1978	1979	2	S	AGF9611
YAMAHA	400	WR400	1999	2000	2	S	AGF9608
YAMAHA	400	WR400	2001	2003	2	S	AGF9615
YAMAHA	400	XJR400	1985	1995	3	F	AGF9773
YAMAHA	400	XJR400	1996	2000	3	F	AGF9625
YAMAHA	400	XR400RV	1996	2001	2	S	AGF9548
YAMAHA	400	XS400 D SOHC	1976	1977	2	S	AGF9545
YAMAHA	400	XS400 SE	1980	1983	2	S	AGF9343
YAMAHA	400	XVS400 DRAGSTAR	2000	2007	1	S	AGF9710
YAMAHA	400	YP400 MAJESTY 400	2003	2008	2	S	AGF9681
YAMAHA	400	YZ400	1999		2	S	AGF9617
YAMAHA	426	WR426F	2001	2003	2	S	AGF9616
YAMAHA	426	YZ426	2000	2004	2	S	AGF9496
YAMAHA	450	QUAD : YFZ450	2004	2006	3	F	AGF9624
YAMAHA	450	QUAD : YFZ450	2004	2006	4	S	AGF9688
YAMAHA	450	QUAD : YFZ450 - ATV ONLY	2004	2006	4	S	AGF9689
YAMAHA	450	WR450F	2007	2008	2	S	AGF9700
YAMAHA	450	WR450F ENDURO	2005	2006	2	S	AGF9736
YAMAHA	450	WR450F MOTORCROSS	2005	2006	2	S	AGF9646

TUBI FRENO BRAKE LINES

AGGIORNATO A DICEMBRE 2016 / last updated on December 2016 **www.accossato.com/accessori-moto/tubi-freno.html**

I KIT TUBI FRENO ACCOSSATO SONO FORNITI COMPLETI DI PARTE ANTERIORE E POSTERIORE
Accossato brake line kits encompass front&rear components

MARCA Brand	CC	MODELLO Model	ANNI / Years DA From	A To	NR. TUBI Hoses N°	LAYOUT	CODICE Reference
YAMAHA	450	YZ450	2005	2005	2	S	AGF9648
YAMAHA	450	YZ450F YZF	2006	2010	2	S	AGF9683
YAMAHA	450	YZ450F YZF	2011	2016	2	S	AGF9759
YAMAHA	450	QUAD : YFZ450	2009	2016	4	S	AGF9692
YAMAHA	500	KS500 C	1976		2	S	AGF9131
YAMAHA	500	RD500 LC YPVS	1984	1987	6	S	AGF9186
YAMAHA	500	RVZ500R	1984	1986	6	S	AGF9187
YAMAHA	500	SR500	1978	1983	2	S	AGF9195
YAMAHA	500	XP500 T-MAX	2000	2004	2	S	AGF9704
YAMAHA	500	XP500 T-MAX	2004	2007	3	S	AGF9677
YAMAHA	500	XP500 T-MAX	2008		4	S	AGF9715
YAMAHA	500	XS500 C	1976		2	S	AGF9349
YAMAHA	500	XS500 E TWIN DISC CONVERSION	1978		4	S	AGF9739
YAMAHA	500	XT500	1977	1983	1	S	AGF9389
YAMAHA	500	TMAX 500	2011	2013	6	S	AGA0021
YAMAHA	530	T-MAX 530 ABS	2012	2014	6	S	AGA0034
YAMAHA	530	T-MAX 530 (NO ABS)	2015	2016	5	S	AGA0035
YAMAHA	530	T-MAX 530 ABS (SOLO ANTERIORI)	2015	2016	4	S	AGA0036
YAMAHA	530	T-MAX 530 (NO ABS)	2012	2014	5	S	AGA0041
YAMAHA	535	XV535 DX VIRAGO	1998	2001	2	S	AGF9433
YAMAHA	535	XV535 S VIRAGO	1994	1997	2	S	AGF9437
YAMAHA	535	XV535 VIRAGO IMPORT	1988	1998	2	S	AGF9441
YAMAHA	550	XJ550	1981	1985	3	S	AGF9267
YAMAHA	550	XJ550 US IMPORT	1985		2	S	AGF9272
YAMAHA	550	XZ550	1982	1985	3	S	AGF9486
YAMAHA	550	XZ550S	1984	1985	3	S	AGF9489
YAMAHA	600	FZ6 N FAZER	2004	2006	3	F	AGF9628
YAMAHA	600	FZ6 N FAZER	2004	2006	3	O	AGF9629
YAMAHA	600	FZ6 N FAZER	2007	2010	3	O	AGF9756
YAMAHA	600	FZ6 N FAZER	2007	2010	3	F	AGF9757
YAMAHA	600	FZ6 S FAZER	2004	2006	3	F	AGF9626
YAMAHA	600	FZ6 S FAZER	2004	2006	3	O	AGF9627
YAMAHA	600	FZ600 SPORTS	1987	1988	4	S	AGF9059
YAMAHA	600	FZ6R	2007	2010	3	O	AGF9754
YAMAHA	600	FZ6 S2 FAZER	2007	2010	3	F	AGF9755
YAMAHA	600	FZR600	1989	1990	4	S	AGF9097
YAMAHA	600	FZR600	1989	1990	3	F	AGF9098
YAMAHA	600	FZR600 GENESIS	1991	1993	4	S	AGF9100
YAMAHA	600	FZR600 R US IMPORT	1994	1996	3	S	AGF9585
YAMAHA	600	FZR600R	1994	1996	3	S	AGF9105
YAMAHA	600	FZS600 FAZER	1998	2003	4	S	AGF9118
YAMAHA	600	FZS600 FAZER	1998	2003	3	F	AGF9119
YAMAHA	600	SRX600	1986	1988	4	S	AGF9200
YAMAHA	600	TT600N	1985	1989	1	S	AGF9774
YAMAHA	600	XJ6	2008	2009	3	F	AGF9753
YAMAHA	600	XJ6 N	2009	2010	3	F	AGF9762
YAMAHA	600	XJ6 N	2009	2010	3	O	AGF9763
YAMAHA	600	XJ600	1984	1992	4	S	AGF9273
YAMAHA	600	XJ600	1990		3	S	AGF9751
YAMAHA	600	XJ600 N	1994	1997	2	S	AGF9729
YAMAHA	600	XJ600 N	2000		3	F	AGF9775
YAMAHA	600	XJ600 N - S DIVERSION	1998	2003	3	F	AGF9575
YAMAHA	600	XJ600 N SINGLE DISC DIVERSION	1992	1997	2	S	AGF9282
YAMAHA	600	XT600	1987	1990	2	S	AGF9711
YAMAHA	600	XT600	1991	2003	2	S	AGF9657
YAMAHA	600	XT600 Z TENERE	1986	1990	2	S	AGF9390
YAMAHA	600	YX600 RADIAN	1986	1994	3	S	AGF9283
YAMAHA	600	YZF600R THUNDERCAT	1996	2002	3	S	AGF9505
YAMAHA	600	YZF-R6	1998	2002	3	S	AGF9524
YAMAHA	600	YZF-R6	1998	2002	3	O	AGF9525

ACCOSSATO

TUBI FRENO BRAKE LINES

AGGIORNATO A DICEMBRE 2016 / last updated on December 2016 **www.accossato.com/accessori-moto/tubi-freno.html**

I KIT TUBI FRENO ACCOSSATO SONO FORNITI COMPLETI DI PARTE ANTERIORE E POSTERIORE
Accossato brake line kits encompass front&rear components

MARCA Brand	CC	MODELLO Model	ANNI / Years DA From	A To	NR. TUBI Hoses N°	LAYOUT	CODICE Reference
YAMAHA	600	YZF-R6	2003	2004	3	F	AGF9566
YAMAHA	600	YZF-R6	2005	2005	3	F	AGF9644
YAMAHA	600	YZF-R6	2005	2005	3	O	AGF9645
YAMAHA	600	YZF-R6	2006	2015	3	F	AGF9686
YAMAHA	600	YZF-R6 ROSSI REPLICA	2006	2007	3	F	AGF9687
YAMAHA	650	XJ650	1980	1984	3	S	AGF9289
YAMAHA	650	XJ650 TURBO	1982	1985	3	S	AGF9294
YAMAHA	650	XS650	1975		3	S	AGF9350
YAMAHA	650	XS650	1981	1982	3	S	AGF9351
YAMAHA	650	XS650 C	1975		3	S	AGF9352
YAMAHA	650	XS650 E - F	1978	1980	3	S	AGF9353
YAMAHA	650	XS650 II	1972		1	S	AGF9354
YAMAHA	650	XS650 SE	1979	1982	3	S	AGF9355
YAMAHA	650	XS650 US IMPORT			2	S	AGF9360
YAMAHA	650	XVS650 DRAGSTAR	1997	2007	1	S	AGF9459
YAMAHA	650	XVS650A DRAGSTAR CLASSIC	1998	2006	1	S	AGF9464
YAMAHA	650	XJ650 MAXIM USA IMPORT - SINGLE DISC	1982	1984	2	S	AGF9290
YAMAHA	660	MT-03	2006	2008	3	F	AGF9674
YAMAHA	660	MT-03	2006	2008	4	S	AGF9675
YAMAHA	660	QUAD : YFZ660R RAPTOR	2000	2005	3	F	AGF9619
YAMAHA	660	QUAD : YFZ660R RAPTOR	2000	2005	4	S	AGF9620
YAMAHA	660	SZR660	1996	1997	2	S	AGF9203
YAMAHA	660	XT660 Z TENERE	2008	2010	3	F	AGF9721
YAMAHA	660	XT660R	2004	2010	2	S	AGF9643
YAMAHA	660	XT660X	2004	2010	2	S	AGF9630
YAMAHA	660	XT660Z TENERE	1991	2003	2	S	AGF9761
YAMAHA	660	XTZ660 R	2000	2008	3	F	AGF9734
YAMAHA	660	XTZ660 TENERE	1991	1999	2	S	AGF9397
YAMAHA	700	MT-07	2013	2015	3	O	AGF9673
YAMAHA	700	MT-07	2013	2015	3	F	AGF9671
YAMAHA	700	QUAD : YFM700 RAPTOR	2009	2012	4	S	AGF9004
YAMAHA	700	QUAD : YFM700 RAPTOR	2006	2008	4	S	AGF9702
YAMAHA	700	XV700 VIRAGO IMPORT	1985		3	S	AGF9731
YAMAHA	700	XV700 VIRAGO IMPORT	1985		2	F	AGF9732
YAMAHA	750	FZ750	1985	1986	4	S	AGF9061
YAMAHA	750	FZ750	1987	1995	4	S	AGF9067
YAMAHA	750	FZ750	1985	1988	1	C	AGC9061
YAMAHA	750	FZR750 GENESIS	1989	1992	4	S	AGF9108
YAMAHA	750	FZR750 R OW01	1989	1992	3	S	AGF9110
YAMAHA	750	FZX750	1987	1989	4	S	AGF9128
YAMAHA	750	FZX750	1987	1989	1	C	AGC9128
YAMAHA	750	XJ750 ANTIDIVE	1982	1984	5	S	AGF9298
YAMAHA	750	XS750	1978	1979	4	S	AGF9361
YAMAHA	750	XS750 E	1977	1978	4	S	AGF9362
YAMAHA	750	XS750 SE	1980	1982	4	S	AGF9363
YAMAHA	750	XTZ750 SUPER TENERE	1989	1996	4	S	AGF9406
YAMAHA	750	XV750 SE	1981	1983	1	S	AGF9452
YAMAHA	750	XV750 VIRAGO	1992	1997	3	S	AGF9533
YAMAHA	750	XV750 VIRAGO	1992	1997	2	F	AGF9534
YAMAHA	750	YZF750 SP	1993	1998	3	S	AGF9511
YAMAHA	750	YZF750 SP	1993	1998	1	C	AGC9511
YAMAHA	750	YZF750R	1995	1998	3	S	AGF9532
YAMAHA	750	YZF-R7	1999	2002	3	F	AGF9623
YAMAHA	800	FZ8 S-N (FAIRED / UNFAIRED)	2010	2015	3	F	AGF9750
YAMAHA	800	FZ8 ABS	2011	2015	7	S	AGA0012
YAMAHA	850	MT-09	2013	2015	3	F	AGF9779
YAMAHA	850	MT-09	2013	2015	3	O	AGF9778
YAMAHA	850	TDM850	1991	1996	4	S	AGF9205
YAMAHA	850	TDM850	1997	2002	3	F	AGF9210
YAMAHA	850	TDM850	1997	2002	3	O	AGF9211

TUBI FRENO BRAKE LINES

AGGIORNATO A DICEMBRE 2016 / last updated on December 2016 **www.accossato.com/accessori-moto/tubi-freno.html**

I KIT TUBI FRENO ACCOSSATO SONO FORNITI COMPLETI DI PARTE ANTERIORE E POSTERIORE
Accossato brake line kits encompass front&rear components

MARCA Brand	CC	MODELLO Model	ANNI / Years DA From	ANNI / Years A To	NR. TUBI Hoses N°	LAYOUT	CODICE Reference
YAMAHA	850	TDM850	1997	2002	4	S	AGF9725
YAMAHA	850	TRX850	1996	2000	3	S	AGF9226
YAMAHA	850	TRX850	1996	2000	2	O	AGF9709
YAMAHA	850	XS850	1980	1985	4	S	AGF9366
YAMAHA	850	MT-09 ABS	2014	2016	5	S	AGA0047
YAMAHA	900	TDM900 (NON ABS)	2002	2012	3	O	AGF9555
YAMAHA	900	TDM900 (NON ABS)	2002	2012	4	S	AGF9556
YAMAHA	900	TDM900 (NON ABS)	2002	2012	3	F	AGF9557
YAMAHA	900	XJ900 F	1986	1991	4	S	AGF9301
YAMAHA	900	XJ900 F	1991	1994	4	S	AGF9642
YAMAHA	900	XJ900 S	1983	1985	6	S	AGF9315
YAMAHA	900	XJ900 S DIVERSION	1994	1996	3	F	AGF9712
YAMAHA	900	XJ900 S DIVERSION	1994	1996	4	S	AGF9735
YAMAHA	900	XJ900 S DIVERSION	1997	2003	4	S	AGF9001
YAMAHA	900	XJ900 S DIVERSION	1997	2003	3	F	AGF9002
YAMAHA	900	XJ900 S DIVERSION	1997	2003	3	O	AGF9003
YAMAHA	900	TDM900 ABS	2005	2010	6	S	AGA0045
YAMAHA	920	XV920 IMPORT	1981		3	S	AGF9652
YAMAHA	950	XVS950 MIDNIGHT STAR	2009	2015	2	S	AGF9752
YAMAHA	1000	FZ1 FAZER	2009	2015	3	F	AGF9120
YAMAHA	1000	FZ1-N FAZER	2006	2008	3	F	AGF9668
YAMAHA	1000	FZ1-S FAZER (FAIRED)	2006	2008	3	F	AGF9667
YAMAHA	1000	FZR1000 EXUP	1989	1991	1	C	AGC9074
YAMAHA	1000	FZR1000 GENESIS	1987	1988	4	S	AGF9072
YAMAHA	1000	FZR1000 GENESIS	1987	1988	1	C	AGC9072
YAMAHA	1000	FZR1000 RU EXUP	1991	1994	4	S	AGF9082
YAMAHA	1000	FZR1000 RU EXUP	1991	1994	3	F	AGF9083
YAMAHA	1000	FZR1000R EXUP	1989	1990	3	S	AGF9074
YAMAHA	1000	FZR1000R EXUP	1989	1990	3	F	AGF9658
YAMAHA	1000	FZR1000R EXUP	1995	1996	3	S	AGF9076
YAMAHA	1000	FZS1000 FAZER	2001	2005	4	S	AGF9114
YAMAHA	1000	FZS1000 FAZER	2001	2005	3	F	AGF9115
YAMAHA	1000	GTS1000	1993	1996	1	C	AGC9733
YAMAHA	1000	GTS1000 A ABS	1993	1996	7	S	AGF9733
YAMAHA	1000	XV1000 TR1	1981	1985	3	S	AGF9221
YAMAHA	1000	XV1000 VIRAGO	1986	1989	4	S	AGF9414
YAMAHA	1000	YZF1000R THUNDERACE	1996	2001	3	S	AGF9499
YAMAHA	1000	YZF1000R THUNDERACE	1996	2002	1	C	AGC9499
YAMAHA	1000	YZF-R1	1998	2001	3	S	AGF9516
YAMAHA	1000	YZF-R1	1998	2001	3	O	AGF9517
YAMAHA	1000	YZF-R1	2002	2003	3	F	AGF9522
YAMAHA	1000	YZF-R1	2004	2005	3	F	AGF9632
YAMAHA	1000	YZF-R1	2006	2006	3	F	AGF9684
YAMAHA	1000	YZF-R1	2007	2008	3	F	AGF9703
YAMAHA	1000	YZF-R1	2009	2011	3	F	AGF9737
YAMAHA	1000	YZF-R1	2012	2014	3	F	AGF9772
YAMAHA	1000	YZF-R1	1998	2001	3	F	AGA0048
YAMAHA	1100	BT1100 BULLDOG	2003	2006	4	S	AGF9621
YAMAHA	1100	BT1100 BULLDOG	2003	2006	3	F	AGF9622
YAMAHA	1100	FJ1100	1985	1986	6	S	AGF9038
YAMAHA	1100	FJ1100	1985	1986	1	C	AGC9038
YAMAHA	1100	XS1100	1978	1980	4	S	AGF9332
YAMAHA	1100	XS1100 S	1981	1984	4	S	AGF9333
YAMAHA	1100	XS1100 SG USA IMPORT			4	S	AGF9656
YAMAHA	1100	XV1100 VIRAGO	1989	1999	3	S	AGF9418
YAMAHA	1100	XVS1100 A DRAGSTAR	1998	2008	4	S	AGF9456
YAMAHA	1100	XVS1100 V STAR (USA)	1998	2008	4	S	AGF9567
YAMAHA	1100	XVS1100A DRAGSTAR	1998	2008	3	F	AGF9455
YAMAHA	1200	FJ1200 (3CV - 3XW)	1988	1996	4	S	AGF9042
YAMAHA	1200	FJ1200 (1TX / 3CV / 3XW)	1986	1996	1	C	AGC9042

TUBI FRENO BRAKE LINES

AGGIORNATO A DICEMBRE 2016 / last updated on December 2016 **www.accossato.com/accessori-moto/tubi-freno.html**

I KIT TUBI FRENO ACCOSSATO SONO FORNITI COMPLETI DI PARTE ANTERIORE E POSTERIORE
Accossato brake line kits encompass front&rear components

MARCA Brand	**CC**	**MODELLO** Model	**ANNI** / Years **DA** From	**A** To	**NR. TUBI** Hoses N°	**LAYOUT**	**CODICE** Reference
YAMAHA	1200	FJ1200 A ABS	1991	1996	1	C	AGC9046
YAMAHA	1200	FJ1200 ANTI DIVE	1986	1987	6	S	AGF9040
YAMAHA	1200	FJ1200A ABS	1991	1996	8	S	AGF9046
YAMAHA	1200	V-MAX 1200	1985	2003	4	S	AGF9245
YAMAHA	1200	V-MAX 1200	1985	2003	3	F	AGF9246
YAMAHA	1200	V-MAX 1200	1991	2003	1	C	AGC9245
YAMAHA	1200	XJR1200	1995	1998	3	F	AGF9316
YAMAHA	1200	XJR1200	1995	1998	1	C	AGC9316
YAMAHA	1200	XVZ12TD VENTURE XVZ1200TD	1999	2001	5	S	AGF9468
YAMAHA	1200	SUPER TENERE 1200	2010	2015	9	S	AGA0040
YAMAHA	1300	FJR1300	2000	2005	3	F	AGF9582
YAMAHA	1300	FJR1300	2000	2005	1	C	AGC9581
YAMAHA	1300	FJR1300A ABS	2008	2014	1	C	AGC9666
YAMAHA	1300	XJR1300	1999	2001	4	S	AGF9320
YAMAHA	1300	XJR1300	1999	2001	3	F	AGF9326
YAMAHA	1300	XJR1300	2002	2008	3	F	AGF9573
YAMAHA	1300	XJR1300	1999	2008	1	C	AGC9326
YAMAHA	1300	XVS1300A MIDNIGHT STAR	2006	2010	4	S	AGF9697
YAMAHA	1300	XVZ1300 A ROYAL STAR	1996	2001	4	S	AGF9476
YAMAHA	1300	XVZ1300 A ROYAL STAR	1996	1999	1	C	AGC9476
YAMAHA	1300	XVZ1300 AT TOUR CLASSIC	1997	2001	4	S	AGF9471
YAMAHA	1300	XVZ1300 TF VENTURE STAR	1998	2001	4	S	AGF9482
YAMAHA	1300	FJR 1300	2000	2005	4	S	AGA0024
YAMAHA	1600	XV1600 ROAD STAR	1998	2002	4	S	AGF9562
YAMAHA	1600	XV1600 ROADSTAR SILVERADO	1999	2001	4	S	AGF9558
YAMAHA	1600	XV1600 WILD STAR	1998	2004	4	S	AGF9429
YAMAHA	1700	MT-01	2005	2012	4	S	AGF9672
YAMAHA	1700	MT-01	2005	2012	3	F	AGF9670
YAMAHA	1700	V-MAX 1700	2009	2011	1	C	AGC9771
YAMAHA	1700	XV1700 ROAD STAR	2004	2005	4	S	AGF9636
YAMAHA	1700	XV1700 WARRIOR	2004	2005	3	F	AGF9659
YAMAHA	1700	XV1700 WARRIOR	2004	2005	4	S	AGF9660
YAMAHA	1900	XV1900 MIDNIGHT STAR	2006	2007	3	F	AGF9679
YAMAHA	1900	XV1900 MIDNIGHT STAR	2006	2012	4	S	AGF9738
YAMAHA	1900	XV1900 MIDNIGHT STAR	2006	2012	1	C	AGC9738
YAMAHA		BWS NG B-WHIZZ	1999	2005	1	S	AGF9637
YAMAHA		FS1E-DX	1983		1	S	AGF9057
YAMAHA		MT-01	2005	2012	1	C	AGC9670
YAMAHA		NEOS	2004	2009	1	S	AGF9740
YAMAHA		YSR50	1980		1	S	AGF9062
TUBI FRENO PERSONALIZZATI / Customized brake hoses							
		KIT TUBI FRENO PERSONALIZZATI			1		KIP1
		KIT TUBI FRENO PERSONALIZZATI			2		KIP2
		KIT TUBI FRENO PERSONALIZZATI			3		KIP3
		KIT TUBI FRENO PERSONALIZZATI			4		KIP4
		KIT TUBI FRENO PERSONALIZZATI			5		KIP5
		KIT TUBI FRENO PERSONALIZZATI			6		KIP6
		KIT TUBI FRENO PERSONALIZZATI			7		KIP7
		KIT TUBI FRENO PERSONALIZZATI			8		KIP8
		KIT TUBI FRENO PERSONALIZZATI			9		KIP9
		KIT TUBI FRENO PERSONALIZZATI			10		KIP10
		KIT TUBI FRENO PERSONALIZZATI			11		KIP11
		KIT TUBI FRENO PERSONALIZZATI			12		KIP12

Per la realizzazione dei kit tubo freno personalizzati, compilare l'apposita "scheda ordine kit tubo freno", disponibile sul portale B2B www.accossato.eu, al link: http://www.accossato.eu/pdf/scheda-ordine-kit-tubo-freno.pdf
To order your brake line customized kit, go to our B2B platform www.accossato.eu and fill out the specific form available at http://www.accossato.eu/pdf/scheda-ordine-kit-tubo-freno.pdf

TUBI MODULARI / modular hoses

Il sistema di tubi modulari Accossato Racing offre ai rivenditori la possibilità di poter soddisfare sempre le esigenze di ogni cliente, unendo il grande vantaggio di ridurre il magazzino dei tubi in treccia. I tubi sono disponibili nelle varie lunghezze e dotati di supporto su cui avvitare il raccordo scelto. L'esclusivo sistema di "Tubi Modulari Accossato" garantisce qualità e affidabilità massime, senza alterare nel tempo la capacità performante.

Accossato Racing hose modular system allows dealers to always fulfill their customers' needs, by offering the great advantage of limiting stockhouse management. Available in several measures, hoses are provided with connection to crimp selected banjo on it. "Accossato Modular Hoses" exclusive system guarantees the highest quality and reliablility standards, without performance getting altered in the course of time.



CODICE Code	DESCRIZIONE Description	Ø MM
MS3215	**OCCHIELLO DRITTO** straight banjo	10
MS3216	**OCCHIELLO 25° VERSO IL BASSO** 25° banjo, low bend	10
MS3217	**OCCHIELLO 45° VERSO IL BASSO** 45° banjo, low bend	10
MS3218	**OCCHIELLO 60° VERSO IL BASSO** 60° banjo, low bend	10
MS3219	**OCCHIELLO 90° VERSO IL BASSO** 90° banjo, low bend	10



CODICE Code	DESCRIZIONE Description	Ø MM
MS3713	**FEMMINA FISSA** fixed female	M10X1



CODICE Code	DESCRIZIONE Description	Ø MM
MS3714	**MASCHIO FISSO** fixed male	M10X1

SPECIFICARE COLORI GUAINA - COLORI DISPONIBILI:
NERO, NERO CARBONE, NERO NEON, ARGENTO, ROSSO, ROSSO NEON, ROSA, VERDE KAWASAKI, VERDE NEON, VIOLA, ARANCIONE, ARANCIONE NEON, GIALLO, GIALLO NEON, BIANCO, TRASPARENTE, BLU DENIM, BLU YAMAHA, ORO, ORO NEON

Please, specify hose colour - available colours:
black, carbon black, neon black, silver, red, neon red, pink, kawasaki green, neon green, purple, orange, neon orange, yellow, neon yellow, white, clear, denim blue, yamaha blue, gold, neon gold

LUNGHEZZE TUBI / hoses measures

CODICE Code	LUNGHEZZA Length	CODICE Code	LUNGHEZZA Length	CODICE Code	LUNGHEZZA Length	CODICE Code	LUNGHEZZA Length	CODICE Code	LUNGHEZZA Length
MS0100	100mm	MS0300	300MM	MS0500	500MM	MS0700	700MM	MS1050	1050MM
MS0125	125MM	MS0325	325MM	MS0525	525MM	MS0725	725MM	MS1100	1100MM
MS0150	150MM	MS0350	350MM	MS0550	550MM	MS0750	750MM	MS1150	1150MM
MS0175	175MM	MS0375	375MM	MS0575	575MM	MS0800	800MM	MS1200	1200MM
MS0200	200MM	MS0400	400MM	MS0600	600MM	MS0850	850MM	MS1250	1250MM
MS0225	225MM	MS0425	425MM	MS0625	625MM	MS0900	900MM	MS1300	1300MM
MS0250	250MM	MS0450	450MM	MS0650	650MM	MS0950	950MM	MS1375	1375MM
MS0275	275MM	MS0475	475MM	MS0675	675MM	MS1000	1000MM	MS1400	1400MM

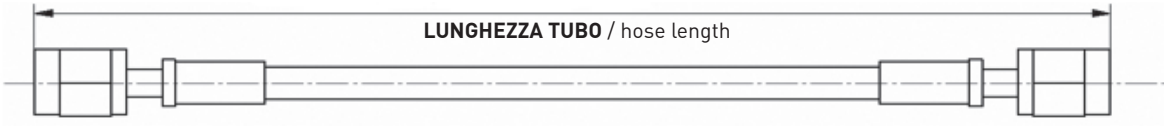

ISTRUZIONI DI MONTAGGIO

1 **FISSARE I RACCORDI IN MORSA SENZA ROVINARE IL PIANO DEGLI OCCHIELLI**
2 **AVVITARE LA GHIERA SUL RACCORDO, APPLICANDO UNA COPPIA DI SERRAGGIO DA 19N/M A 24N/M**

Assembly instructions

1 Clamp fitting into the vice paying attention not to demage banjo surface
2 Screw ring nut onto the fitting by applying a tightening torque from 19N/m to 24N/m

EASY MODULAR SYSTEM

I raccordi easy modular system sono realizzati in acciaio inox 304 e consentono il rapido assemblaggio del kit tubi freno: utilissimi per approvvigionamento rapido o realizzazione di un prototipo. I raccordi possono essere riutilizzati più volte, sostituendo solo il tubo. Il montaggio del kit tubi freno deve essere eseguito esclusivamente da personale qualificato e il loro utilizzo è limitato ai soli circuiti chiusi. Correttamente montato, il sistema modular easy offre le stesse garanzie e prestazioni dei tubi freno pressati.

Easy modular system joints are made of 304 stainless steel and allow brake hoses rapid assembly: specifically designed for fast procurement or prototype production. Joints can be reused several times, by replacing the hose solely. Brake line kits must be assembled by specialized personnel only and their use is restricted to close tracks only. If properly assembled, easy modular system offers the same warranties and performances as already crimped brake hoses. getting altered in the course of time.







CODICE Code	DESCRIZIONE Description	Ø MM
EM3210	**OCCHIELLO DRITTO** straight banjo	10
EM3211	**OCCHIELLO 25° VERSO IL BASSO** 25° low bend banjo	10
EM3212	**OCCHIELLO 45° VERSO IL BASSO** 45° low bend banjo	10
EM3213	**OCCHIELLO 90° VERSO IL BASSO** 90° low bend banjo	10

CODICE Code	DESCRIZIONE Description	Ø MM
EM3214	**FEMMINA GIREVOLE** swivel female	M10X1
EM3215	**FEMMINA GIREVOLE** swivel female	3/8''

CODICE Code	DESCRIZIONE Description	NOTE
BB001	**BOBINA** bobbin	**Specificare lunghezza desiderata** specify length

CODICE Code	DESCRIZIONE Description	Ø MM
EM3216	**MASCHIO GIREVOLE** swivel male	M10X1
EM3217	**MASCHIO GIREVOLE** swivel male	M10X1,25
EM3218	**MASCHIO GIREVOLE** swivel male	3/8''

RICAMBIO
spare part



CODICE Code	DESCRIZIONE Description
MS3112	**OGIVA** / nose cone

COLORI GUAINA
sheath colours



NERO
black



NERO CARBONE
carbon look



ARGENTO
silver



BLU YAMAHA
yamaha blue



ROSSO
red



ROSSO NEON
red trans



ROSA
pink



VIOLA
purple



ARANCIO
orange



GIALLO
yellow



BIANCO
white



TRASPARENTE (TRECCIA A VISTA)
clear (twist in view)



NERO NEON
neon black



VERDE NEON
neon green



ORO NEON
neon gold



ORO
gold



BLU DENIM
denim blue



ARANCIO NEON
neon orange



GIALLO NEON
neon yellow



VERDE KAWASAKI
kawasaki green

EASY MODULAR SYSTEM

ACCESSORI

accessories



CODICE / Code	DESCRIZIONE / Description
MS3423	PUNTERUOLO / punch



CODICE / Code	DESCRIZIONE / Description
ROND10	RONDELLA IN RAME / copper washer
MS3715	FASCHETTA PASSACAVO / rafter end



CODICE / Code	DESCRIZIONE / Description	Ø MM
MS2362	BULLONE DOPPIO / double bol	M10X1
MS2363	BULLONE DOPPIO / double bol	M10X1,25
MS2364	BULLONE DOPPIO / double bol	3/8"



CODICE / Code	DESCRIZIONE / Description	Ø MM
MS2365	BULLONE SINGOLO / single bol	M10X1
MS2366	BULLONE SINGOLO / single bol	M10X1,25
MS2667	BULLONE SINGOLO / single bol	3/8"

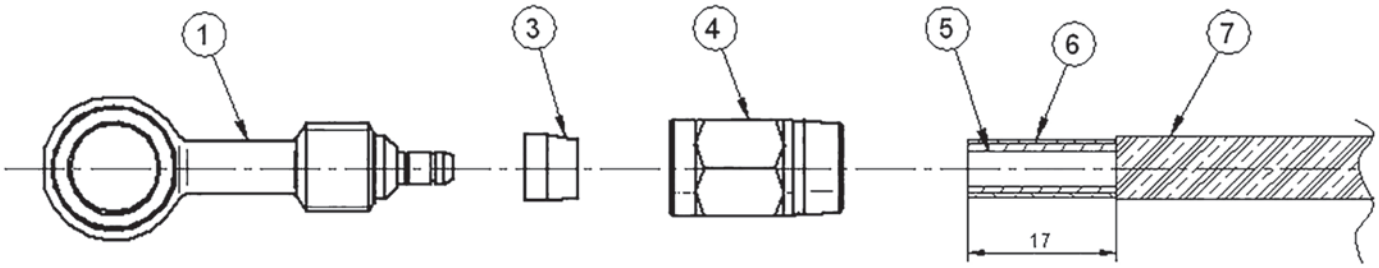

ISTRUZIONI DI MONTAGGIO

1. **TAGLIARE IL TUBO FRENO ALLA MISURA DESIDERATA, CON UNA CESOIA TAGLIACAVO. N.B. IL TAGLIO DOVRÀ RISULTARE IL PIÙ NETTO POSSIBILE, PER EVITARE DANNOSI SFILACCIAMENTI DELLA TRECCIA METALLICA (6).**
2. **ACCORCIARE LA GUAINA COLORATA (7) DI 17MM.**
3. **RIPRISTINARE LA ROTONDITÀ DEL TUBO.**
4. **INSERIRE LA GHIERA (4) NELLA TUBAZIONE.**
5. **ALLARGARE LEGGERMENTE LA TRECCIA METALLICA UTILIZZANDO IL PUNTERUOLO CODICE MS3423, QUINDI CALZARE L'OGIVA (3) TRA IL TUBO INTERNO (5) E LA TRECCIA METALLICA (6). ASSICURARSI CHE L'OGIVA SIA IN BATTUTA CON IL TUBO.**
6. **PROCEDERE AD AVVITARE IL TERMINALE (1) CON LA GHIERA (4), FINO A QUANDO LA FILETTATURA DEL RACCORDO VIENE COPERTA QUASI COMPLETAMENTE DALLA GHIERA.**
7. **CHIUDERE CON UNA CHIAVE DINAMOMETRIA A 20/23 N/M.**
8. **MONTARE IL TUBO SUL VEICOLO E ASSICURARSI CHE NON VI SIANO PERDITE O FILAMENTI DI OLIO IN CORRISPONDENZA DEI RACCORDI, METTENDO IN PRESSIONE L'IMPIANTO PER ALCUNI MINUTI.**

Assembly instructions

1. Cut brake hose at the desired length, by using a wire-cutting shears. N.B. Hose edge shoud be as clear-cut as possible, in order to prevent metallic braid (6) from unravelling.
2. Shorten coloured sheath (7) of 17mm.
3. Reinstate hose roundness.
4. Insert ring nut (4) into the hose.
5. Slightly widen the metallic braid by using a bradawl, code MS3423. Insert nose cone (3) between inner hose (5) and metallic braid (6). Make sure the nose cone be in contact with the hose.
6. Screw joint (1) together with ring nut (4), until joint pitch gets almost utterly covered by ring nut.
7. Tighten by using a torque wrench at 20/23 N/m.
8. Assembly brake hose to the motorbike, inspecting no oil leaks affect joints by simply pressurizing system for some minutes.


Interwetten
SIDI
ARROW
GP
AFAM
ALCOSSATO
DUNLOP
MOTO
SCOUT24
MOTOREX


SBK
MUGEN RACE
ACCOSSATO
40
IGNALI
COMI

ACCOSSATO

PASTIGLIE
BRAKE PADS



PASTIGLIE BRAKE PADS



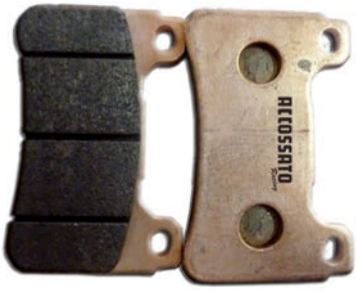



RACING SPECIAL

MESCOLA ORGANICA *OR*

Le pastiglie mescola "OR" organica Accossato garantiscono prestazioni durature e limitata usura del disco con un elevata modulazione in frenata. La gamma di queste pastiglie copre sia il mercato degli scooter che quello delle moto stradali e off-road.

ORGANIC *OR* COMPOUND

The Accossato's organic OR compound-pads guarantee long performance and limited disc wear, with a high braking modulation. These pads cover the market of scooter, motorcycle and off-road too.



MESCOLA SINTERIZZATA STANDARD *ST*

Le pastiglie freno sinterizzate mescola "ST" Accossato sono realizzate con il processo produttivo di sinterizzazione che permette un'ottima stabilità delle prestazioni con il mantenimento di un elevato coefficiente d'attrito .
La particolare mescola permette una drastica diminuzione dell'effetto "fading" anche alle temperature più alte. Questo tipo di mescola è stata studiata per garantire un coefficiente d'attrito alto e costante sia alle alte che alle basse temperature dando un ottimo attrito anche sul bagnato.

SINTERED STANDARD *ST* COMPOUND

The Accossato's ST compound brake-pads are realized by sintering productive process that permits the best stability of the performances with a high grip maintenance. The particularity of this compound permits to reduce the fading-effects at higher temperatures too. This type of compound was created for guarantee a high and costant grip level at high and low temperatures, giving a good grip on wet ground.

MESCOLA IN CERAMICA *ZXC*

La mescola in ZXC è prodotta mediante sinterizzazione dove la componente in ceramica è il legante della matrice. Questa pastiglia è resistente alle medie temperature di utilizzo e, grazie alle proprie caratteristiche, offre un ottimo coefficiente di attrito che mantiene costante la frenata e evita l'effetto fadind, sopportando le elevate temperature del disco freno. Questa pastiglia è indicata solo per l'uso racing.

POTTERY *ZXC* COMPOUND

The pottery ZXC compound is produced with sintering-process. This pad is medium temperature resistant; for own characteristics gives a high grip maintenance that guarantees costant braking and avoids the fading-effect, bearing the high temperature of the brake disc. This pad is recommended just for racing.

RACING SPECIAL



PASTIGLIE BRAKE PADS



STMX

Le NUOVE pastiglie Accossato STMX nascono con lo scopo di accontentare le esigenze di tutti quei piloti appassionati dell'Off-Road. Infatti le STMX sono una mescola studiata essenzialmente per il mondo cross ed enduro e in generale per il fuoristrada.

STMX

The NEW Accossato STMX pads have been created to satisfy the demand of those pilots who love the Off-Road. For this reason the STMX is a compund essentially worked out for the cross and enduro world.





Z EVOLUTION MESCOLA EV1

Le pastiglie in mescola EV1 sono progettate per uso sia stradale che Racing amatoriale. Sono pastiglie a carattere aggressivo e forniscono altissime prestazioni in ogni condizione.
CARATTERISTICHE TECNICHE:
- **Grip eccelente per un massimo di reattività**
- **Alta efficienza sia sull'asciutto che sul bagnato**
- **Nessun fading**

Z EVOLUTION EV1 COMPOUND

The EV1 brake pads are designed for a Street and an amatorial racing use. This kind of compound is very aggressive and offers high performance in every condition.
TECHNICAL DETAILS:
- Excellent grip for an extremely reacting braking
- High performing braking in dry or wet weather
- No fading



TOP RACING

Z EVOLUTION MESCOLA EV2

Le pastiglie in mescola EV2 sono solo per impiego racing: vengono sviluppate dai migliori piloti in condizioni di corsa.
CARATTERISTICHE TECNICHE:
- **Grip eccellente, frenata estremamente reattiva**
- **Consumo del disco bassissimo**
- **Ottime prestazioni sia alle basse che alle alte temperature**

SCONSIGLIATE PER DISCHI "WAVE" E "BUTTERFLY"

Z EVOLUTION EV2 COMPOUND

The EV2 brake pads are Racing use only : they are developped thanks to the best top racers during the races.
TECHNICAL DETAIL :
- Excellent grip, extremely reactive braking
- High performances at low and high temperature
- Excellent wear of the disc

NOT RECOMMENDED FOR "WAVE" AND "BUTTERFLY" BRAKE ROTORS

TOP RACING

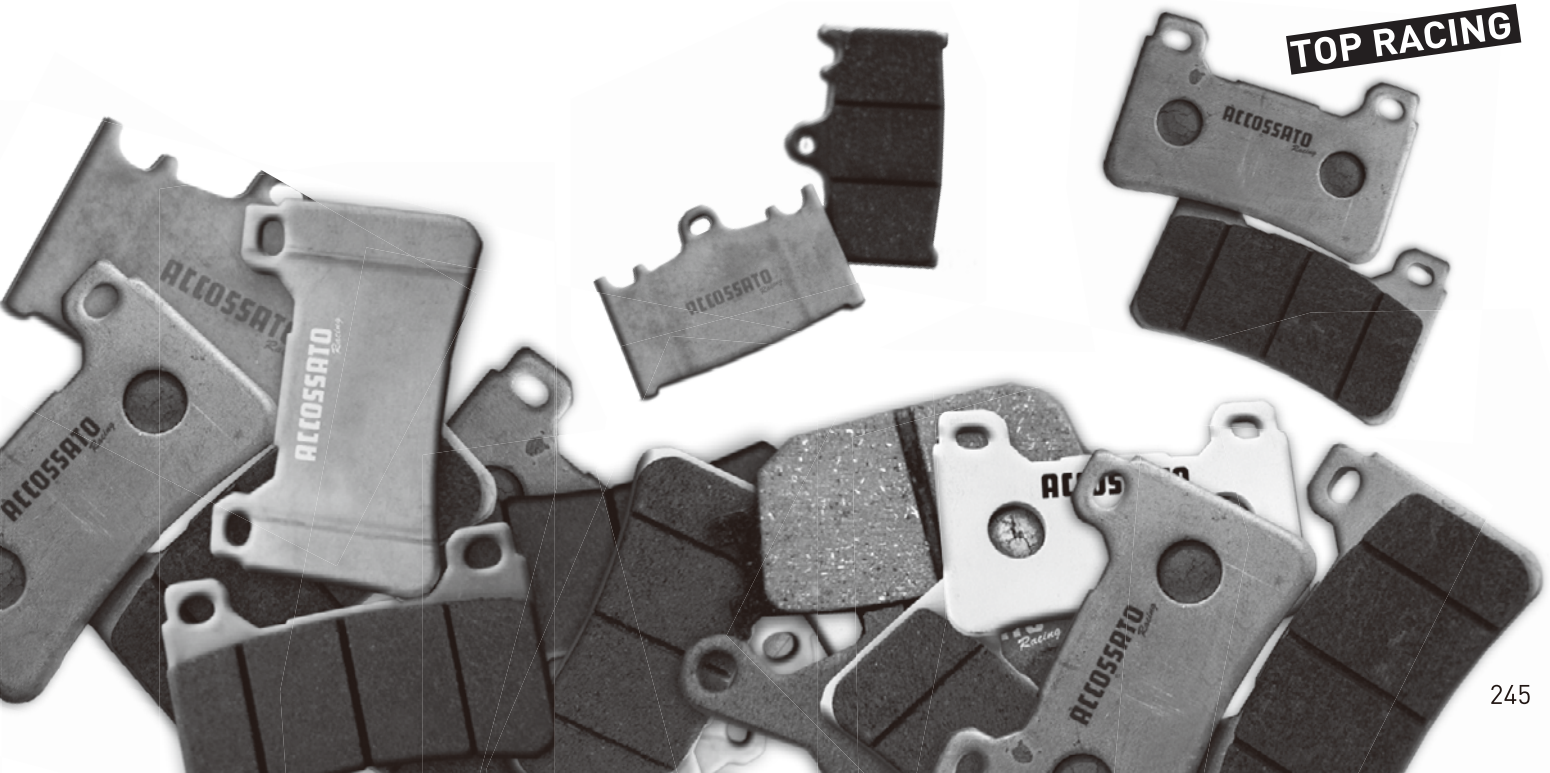


Arai
HELMET
DAINESE
CAROLE NASH
The cars it deserves
OXFORD
Essential Rider Equipment
B&C
express
Donington
ACCOSSATO
Speedfit
Kawasaki
Racing
Milk
www.leonhaslam.com
MONSTER
ENERGY
Kawasaki
DAINESE

INDICE LINEA PASTIGLIE FRENO
brake pads index

ANALITICO PASTIGLIE FRENO
brake pads application list: **248 - 318**

SCHEDE PASTIGLIE FRENO
brake pads data sheets: **319 - 502**

PASTIGLIE NUOVE 2017
2017 brand new pads: **490 - 502**

PASTIGLIE BRAKE PADS

INDICE ANALITICO PASTIGLIE / pads alphabetical index

MARCA Brand	MODELLO Model	CC	DA From	A To	ANT. Front	POST. Rear
ACCOSSATO						
ACCOSSATO	50 ENDURO CODICE	50	1989			AGPA15
ACCOSSATO	CE 50	50	1987			AGPA15
ACCOSSATO	KR 80	80	1987			AGPA15
ACCOSSATO	108MM RADIAL RACING CALIPER, 4 PISTON/4 PAD				AGPA134	
ADLY						
ADLY	50 CAT	50	2001		AGPA84	
ADLY	50 COSY	50	2001		AGPA84	
ADLY	50 FOX	50	2000		AGPA84	
ADLY	50 FOX PLUS	50	2001		AGPA84	
ADLY	50 JET	50	1996		AGPA84	
ADLY	50 PANTHER	50	2001		AGPA83	
ADLY	50 PISTA, PISTA TWIN LIGHT	50	1996		AGPA84	
ADLY	50 SILVER FOX	50	2000	2005	AGPA84	
ADLY	50 SILVER FOX	50	2006		AGPA83	
ADLY	50 SUPER SONIC	50	2000		AGPA83	
ADLY	50 THUNDERBIKE	50	1997		AGPA83	
ADLY	RS 50 SUPER SONIC	50	2006		AGPA83	AGPA83
ADLY	RT 50 ROAD TRACER	50	2002		AGPA84	
ADLY	70 FOX PLUS	70	2001		AGPA84	
ADLY	70 PISTA, PISTA TWIN LIGHT	70	2001		AGPA84	
ADLY	80 COSY	80	2001		AGPA84	
ADLY	RT 90 ROAD TRACER	90	2002		AGPA84	
ADLY	100 CAT	100	2001		AGPA84	
ADLY	100 JET	100	1996		AGPA84	
ADLY	100 PANTHER	100	2001		AGPA83	
ADLY	100 SILVER FOX	100	2001	2005	AGPA84	
ADLY	100 SILVER FOX	100	2006		AGPA83	
ADLY	100 SUPER SONIC	100	2001		AGPA83	
ADLY	100 THUNDERBIKE	100	2001		AGPA83	AGPA83
ADLY	RT 100 ROAD TRACER	100	2002		AGPA84	
ADLY	125 CAT	125	2001		AGPA84	
ADLY	125 SUPER SONIC	125	2001		AGPA83	
ADLY	125 THUNDERBIKE	125	2001		AGPA83	AGPA83
ADLY	150 ATV	150	2005		AGPA82	AGPA82
ADLY	150 INTERCEPTOR	150	2005		AGPA82	AGPA82
ADLY	300 ATV	300	2005		AGPA82	AGPA82
ADLY	ATV SPORT 300	300	2007		AGPA173	
ADLY	CROSS X OVER 300	300	2007		AGPA173	
ADLY	CROSS X ROAD 300	300	2007		AGPA173	
ADLY	S 320	320	2007		AGPA173	
ADLY	U 320	320	2007		AGPA173	
ADLY	25 SILVER FOX		2000	2005	AGPA84	
AEON						
AEON	100 REVO 2	100	2004			AGPA82
AEON	125 PULSAR	125	2006		AGPA82	
AEON	125 URBAN	125	2011	2013	AGPA80	
AEON	OVERLAND 125	125	2002			AGPA77
AEON	OZ 125	125	2014		AGPA23	
AEON	URBAN 125	125	2014		AGPA23	
AEON	OVERLAND 180	180	2002			AGPA77
AEON	ROADSTER 180	180	2002			AGPA77
AEON	250 ELITE	250	2011		AGPA80	
AEON	350 URBAN	350	2011		AGPA80	
AJP						
AJP	PR3 125 ENDURO	125	2008			AGPA45
AJP	PR3 125 Enduro	125	2013		AGPA212	
AJP	PR3 125 Enduro Pro	125	2013		AGPA212	
AJP	PR3 125 Extreme	125	2013		AGPA212	
AJP	PR3 125 SUPERMOTARD	125	2008			AGPA45
AJP	PR3 125 Supermoto	125	2013		AGPA212	
AJP	PR4 125 ENDURO	125	2004			AGPA45
AJP	PR4 125 Enduro	125	2013		AGPA212	
AJP	PR4 125 Enduro Pro	125	2013		AGPA212	
AJP	PR4 125 SUPERMOTARD	125	2004			AGPA45
AJP	PR4 125 Supermoto	125	2013		AGPA212	
AJP	PR4 125 Trail	125	2013		AGPA212	
AJP	MX 200	200	2009			AGPA18
AJP	PR3 200 ENDURO	200	2008			AGPA45
AJP	PR3 200 SUPERMOTARD	200	2008			AGPA45
AJP	PR4 200 ENDURO	200	2004			AGPA45
AJP	PR4 200 SUPERMOTARD	200	2004			AGPA45
AJP	PR5 250 ENDURO	250	2009		AGPA51	AGPP90
AJP	PR5 250 Enduro	250	2010		AGPA212	
AJP	PR5 250 Extreme	250	2012		AGPA212	
AJP	PR5 250 SUPERMOTARD	250	2009		AGPA51	AGPP90
AJP	PR5 250 Supermoto	250	2010		AGPA212	
ALFER						
ALFER	MC 80	80	1987		AGPA31	AGPA18
ALFER	MC 80	80	1987		AGPA194	
ALFER	MC 125	125	1987		AGPA31	
ALFER	MC 125	125	1987		AGPA194	
ALFER	MC 125	125	1988		AGPA33	AGPA31
ALFER	MC 125	125	1988			AGPA194
ALFER	VRE 125 4-STROKE	125	2000			AGPP91
ALFER	VRE 125	125	2000		AGPA29	
ALFER	GR 250 ENDURO	250	1985		AGPA194	
ALFER	GR ENDURO 250	250	1985		AGPA31	
ALFER	MC 250	250	1985		AGPA31	

ACCOSSATO

PASTIGLIE BRAKE PADS

INDICE ANALITICO PASTIGLIE / pads alphabetical index

MARCA Brand	MODELLO Model	CC	DA From	A To	ANT. Front	POST. Rear
ALFER	MC 250	250	1985		AGPA194	
ALFER	MC 250	250	1987		AGPA31	AGPA31
ALFER	MC 250	250	1987		AGPA194	AGPA194
ALFER	GR 250 ENDURO	250	1988		AGPA33	AGPA194
ALFER	GR ENDURO 250	250	1988			AGPA31
ALFER	MC 250	250	1988		AGPA33	AGPA31
ALFER	MC 250	250	1988			AGPA194
ALFER	VR 250 CROSS	250	1999			AGPP91
ALFER	VR 250 ENDURO	250	1999			AGPP91
ALFER	VR 250 NO LIMIT	250	1999			AGPP91
ALFER	VR 250 SUPERMOTARD	250	1999			AGPP91
ALFER	VR 250 ALL MODELS	250	1999		AGPA29	
ALFER	VR 250 SUPERMOTARD	250	1999		AGPA29	
ALFER	GR 300	300	1985		AGPA31	
ALFER	GR 300	300	1985		AGPA194	
ALFER	GR 300 ENDURO	300	1988		AGPA33	AGPA194
ALFER	GR ENDURO 300	300	1988			AGPA31
AP RACING						
AP RACING	6 Piston Caliper - Road/Racing				AGPA204	
AP RACING	CP 2868 Caliper - Road/Racing				AGPA209	
AP RACING	CP-6688 FOUR PAD RADIAL 4 PISTON MONOBLOCK				AGPA134	
APRILIA						
APRILIA	E.T. 50	50	1985		AGPA194	AGPA194
APRILIA	ET 50	50	1985		AGPA31	
APRILIA	TUAREG 50	50	1985		AGPA31	
APRILIA	50 TUAREG	50	1986			AGPA151
APRILIA	50 TUAREG RALLY	50	1990			AGPA151
APRILIA	RX 50	50	1990		AGPA20	
APRILIA	RS 50	50	1993	1995	AGPA31	AGPA31
APRILIA	RS 50	50	1996	1999	AGPA31	
APRILIA	SR 50 WWW, NETSCAPER	50	1997		AGPA78	
APRILIA	RS 50 REPLICA	50	2000	2005	AGPA20	
APRILIA	SR 50 RACING	50	2000			AGPP31
APRILIA	SR 50 DITECH	50	2001			AGPP31
APRILIA	SCARABEO 50 DITECH	50	2002			AGPP31
APRILIA	MX 50	50	2003		AGPA20	
APRILIA	50 MINI RX	50	2004		AGPA47	
APRILIA	RX 50 RACING	50	2004	2006	AGPA20	
APRILIA	SR R FACTORY (PINZA GRIMECA) 50	50	2004	2005	AGPA31	
APRILIA	TUONO 50	50	2004		AGPA20	AGPA31
APRILIA	SR 50 STREET	50	2005			AGPP31
APRILIA	50 SPORT CITY ONE	50	2008		AGPA20	
APRILIA	RS-4 50	50	2012		AGPA142	
APRILIA	RS-4 50	50	2012		AGPA175	
APRILIA	AF1 50 AE	50	1986		AGPA15	
APRILIA	AF1 50 EUROPA	50	1990		AGPA15	
APRILIA	AF1 50 FUTURA	50	1990		AGPA15	
APRILIA	RED ROSE 50	50	1990		AGPA15	
APRILIA	AMICO 50 ALL MODELS	50	1992		AGPA13	

MARCA Brand	MODELLO Model	CC	DA From	A To	ANT. Front	POST. Rear
APRILIA	LX 50 AMICO, SPORT	50	1992		AGPA14	
APRILIA	SR 50 EUROPA	50	1993		AGPA14	
APRILIA	SR 50 URBAN KID	50	1993		AGPA14	
APRILIA	SR 50 VIPER	50	1993		AGPA14	
APRILIA	SCARABEO	50	1994	1999	AGPA13	
APRILIA	SR 50 REPLICA	50	1994		AGPA27	
APRILIA	GULLIVER / LIQUID	50	1995		AGPA13	
APRILIA	RALLY 50	50	1995		AGPA13	
APRILIA	RALLY 50 LIQUID COOLED	50	1996		AGPA13	AGPA13
APRILIA	SONIC 50 GP	50	1997		AGPA13	
APRILIA	SONIC 50 SPICE	50	1997		AGPA13	
APRILIA	SR 50 STEALTH - RACING	50	1997		AGPA13	AGPA13
APRILIA	SR 50 WWW - NETSCAPER	50	1997		AGPA13	
APRILIA	AREA 51	50	1998		AGPA13	AGPA13
APRILIA	SCARABEO 50 DELUXE	50	1998		AGPA13	AGPA13
APRILIA	SCARABEO 50 STREET	50	2000		AGPA13	
APRILIA	SR 50 2000	50	2000		AGPA13	
APRILIA	HABANA	50	2001		AGPA13	
APRILIA	MOJITO / MOJITO CUSTOM	50	2002		AGPA13	
APRILIA	SCARABEO 50 DITECH	50	2002		AGPA13	
APRILIA	SR 50 I E DITECH	50	2002		AGPA13	
APRILIA	50 SCARABEO 4T	50	2004		AGPA30	
APRILIA	SCARABEO 70	70	1994		AGPA13	
APRILIA	SCARABEO 100	100	2000		AGPA30	
APRILIA	SCARABEO 100 4T	100	2003		AGPA30	
APRILIA	SCARABEO NET 100	100	2010		AGPA30	
APRILIA	125 STRADA	125	1985			AGPA151
APRILIA	ETX 125	125	1986	1987		AGPA194
APRILIA	ETX TUAREG 125	125	1986	1987		AGPA31
APRILIA	125 TUAREG	125	1987			AGPA194
APRILIA	AF 1 125	125	1987			AGPA194
APRILIA	AF1 125	125	1987			AGPA31
APRILIA	TUAREG 125	125	1987			AGPA31
APRILIA	125 TUAREG WIND	125	1988			AGPA151
APRILIA	125 RED ROSE	125	1989	1990		AGPA194
APRILIA	125 TUAREG RALLY	125	1989	1991		AGPA194
APRILIA	AF 1 125 REPLICA / SINTESI	125	1989	1991	AGPA33	AGPA194
APRILIA	AF1 REPLICA 125	125	1989	1991		AGPA31
APRILIA	AF1 SINTESI 125	125	1989	1991		AGPA31
APRILIA	RED ROSE 125	125	1989	1990		AGPA31
APRILIA	TUAREG RALLY 125	125	1989	1990		AGPA31
APRILIA	125 PEGASO	125	1990	1991		AGPA98
APRILIA	125 TUAREG WIND	125	1990			AGPA98

PASTIGLIE BRAKE PADS

INDICE ANALITICO PASTIGLIE / pads alphabetical index

MARCA Brand	MODELLO Model	CC	DA From	A To	ANT. Front	POST. Rear
APRILIA	AF 1 125 EUROPA / FUTURA	125	1990	1991	AGPA33	AGPA194
APRILIA	AF1 EUROPA 125	125	1990	1991		AGPA31
APRILIA	AF1 FUTURA 125	125	1990	1991		AGPA31
APRILIA	PEGASO 125	125	1990	1991	AGPA70	
APRILIA	RED ROSE 125	125	1990		AGPA70	
APRILIA	RX 125	125	1990	1991		AGPA98
APRILIA	TUAREG 125 WIND	125	1990		AGPA70	
APRILIA	125 SPORT PRO	125	1992		AGPA33	
APRILIA	125 SPORT PROT.	125	1992			AGPA194
APRILIA	PEGASO 125	125	1992		AGPA20	
APRILIA	RX 125	125	1992		AGPA20	
APRILIA	SPORT PRO 125	125	1992			AGPA31
APRILIA	TUAREG 125 RALLY	125	1992		AGPA70	
APRILIA	RS 125 , EXTREMA	125	1993	1998	AGPA33	
APRILIA	CLASSIC 125	125	1996		AGPA70	AGPA31
APRILIA	125 LEONARDO	125	1997	1998	AGPA78	
APRILIA	RX 125	125	1997			AGPA98
APRILIA	125 SCARABEO, SCARABEO GT	125	1999	2005		AGPP31
APRILIA	ETX 125	125	1999		AGPA20	
APRILIA	RS 125	125	1999	2005	AGPA33	
APRILIA	125 ATLANTIC	125	2003		AGPA99	AGPP31
APRILIA	125 SCARABEO, SCARABEO GT	125	2004		AGPA99	
APRILIA	125 TUONO	125	2004		AGPA33	AGPA194
APRILIA	TUONO 125	125	2004			AGPA31
APRILIA	125 SPORTCITY	125	2005			AGPP31
APRILIA	RS 125 PISTA	125	2005		AGPA33	
APRILIA	RS 125	125	2006		AGPA101	AGPP31
APRILIA	RX 125 ENDURO	125	2008			AGPA82
APRILIA	RX 125 SUPERMOTARD	125	2008			AGPA82
APRILIA	RS-4 125	125	2011	2012	AGPA142	
APRILIA	RS-4 125	125	2011	2012	AGPA175	
APRILIA	RS-4 125	125	2012			AGPA82
APRILIA	SR 125 MAX	125	2012		AGPA20	AGPA20
APRILIA	SR 125 SPORT CITY ONE	125	2012		AGPA20	
APRILIA	MX 125 CROSS	125	1985		AGPA28	
APRILIA	ETX 125	125	1986		AGPA28	
APRILIA	ETX 125 TUAREG	125	1986	1987	AGPA28	
APRILIA	TUAREG 125	125	1986		AGPA28	
APRILIA	TUAREG RALLY 125	125	1986		AGPA28	
APRILIA	RED ROSE 125	125	1989		AGPA28	
APRILIA	TUAREG RALLY 125	125	1989		AGPA28	
APRILIA	LEONARDO 125	125	1995	1998		AGPA13
APRILIA	125 CLASSIC	125	1996			AGPA194
APRILIA	RX 125	125	1997		AGPA29	
APRILIA	LEONARDO 125	125	1999		AGPA30	AGPA30
APRILIA	LEONARDO 125 (Grimeca cal.)	125	1999			AGPA30
APRILIA	SR 125	125	1999		AGPA30	
APRILIA	HABANA/ CUSTOM 125	125	2000		AGPA30	

MARCA Brand	MODELLO Model	CC	DA From	A To	ANT. Front	POST. Rear
APRILIA	MOJITO/MOJITO CUSTOM 125	125	2002		AGPA30	
APRILIA	MX 125	125	2004		AGPA29	
APRILIA	MX 125 SM	125	2007		AGPA29	
APRILIA	RX 125 ENDURO	125	2008		AGPA29	
APRILIA	RX 125 SUPERMOTARD	125	2008		AGPA29	
APRILIA	SX 125	125	2008		AGPA29	
APRILIA	RS-4 125	125	2011			AGPA18
APRILIA	TUAREG AS 125	125				AGPA31
APRILIA	150 LEONARDO	150	1997	1998	AGPA78	
APRILIA	150 SCARABEO	150	1999			AGPP31
APRILIA	150 SCARABEO, SCARABEO GT	150	2004		AGPA99	AGPP31
APRILIA	LEONARDO 150	150	1997	1998		AGPA13
APRILIA	LEONARDO 150	150	1999		AGPA30	AGPA30
APRILIA	LEONARDO 150 (Grimeca cal.)	150	1999			AGPA30
APRILIA	MOJITO 150 ALL MODELS	150	2003	2004	AGPA30	
APRILIA	SR 150	150	2000		AGPA30	
APRILIA	200 ATLANTIC	200	2003		AGPA99	AGPP31
APRILIA	200 CLIMBER	200	1993		AGPA194	AGPA194
APRILIA	200 SCARABEO	200	2007		AGPA99	AGPP31
APRILIA	200 SCARABEO CLASS	200	2010		AGPA99	AGPP31
APRILIA	200 SCARABEO IE	200	2012		AGPA99	AGPP31
APRILIA	200 SCARABEO, SCARABEO GT	200	2002	2003		AGPP31
APRILIA	200 SPORTCITY	200	2005			AGPP31
APRILIA	CLIMBER 200	200	1993		AGPA31	AGPA31
APRILIA	240 CLIMBER	240	1989	1990		AGPA151
APRILIA	TX 240	240	1986		AGPA18	
APRILIA	RS 250	249	1998			AGPA13
APRILIA	RS 250	249	1997			AGPA13
APRILIA	RS 250 PISTA	249	2004			AGPA13
APRILIA	250 ATLANTIC IE	250	2007		AGPA99	AGPP31
APRILIA	250 LEONARDO	250	1999	2002		AGPP31
APRILIA	250 LEONARDO (GRIMECA CAL.)	250	1999	2002		AGPP31
APRILIA	250 SCARABEO, SCARABEO IE	250	2006		AGPA99	AGPP31
APRILIA	250 SPORTCITY IE	250	2007			AGPP31
APRILIA	250 TUAREG RALLY	250	1986			AGPA194
APRILIA	AF1 250 REPLICA	250	1990		AGPA33	AGPA141
APRILIA	LEONARDO 250	250	1999	2002	AGPA30	
APRILIA	MX 250 CROSS	250	1985		AGPA194	
APRILIA	MX CROSS 250	250	1985		AGPA31	
APRILIA	RS 250	250	1995	1996	AGPA32	AGPA31
APRILIA	RS 250	250	1997	2002	AGPA96	AGPA31
APRILIA	RS 250	250	1995	2002		AGPA194
APRILIA	RS 250	250	1995	2002		AGPA194
APRILIA	RS 250 PISTA	250	2004		AGPA96	
APRILIA	RS 250 R PISTE	250	2004			AGPA194
APRILIA	RS 250 R PISTE	250	2004			AGPA194

ACCOSSATO

PASTIGLIE BRAKE PADS

INDICE ANALITICO PASTIGLIE / pads alphabetical index

MARCA Brand	MODELLO Model	CC	DA From	A To	ANT. Front	POST. Rear
APRILIA	RS PISTA 250	250	2004			AGPA31
APRILIA	RX 250	250	1986		AGPA31	
APRILIA	RX 250	250	1986		AGPA194	
APRILIA	TUAREG RALLY 250	250	1986		AGPA28	AGPA31
APRILIA	275 CLIMBER	275	1989	1990		AGPA151
APRILIA	280 R , CLIMBER	280	1992		AGPA18	AGPA18
APRILIA	300 SCARABEO SPECIAL	300	2010		AGPA99	AGPP31
APRILIA	LEONARDO 300 (Grimeca cal.)	300	2005			AGPA30
APRILIA	SR 300 MAX	300	2012		AGPA20	AGPA20
APRILIA	TX 311 M	311	1986		AGPA18	
APRILIA	TX 312 M	312	1988		AGPA18	AGPA18
APRILIA	TXR 312 M	312	1988		AGPA18	AGPA18
APRILIA	350 TUAREG	350	1986	1989		AGPA194
APRILIA	350 TUAREG WIND	350	1987	1988		AGPA194
APRILIA	350 TUAREG WIND	350	1990			AGPA98
APRILIA	ETX 350	350	1986		AGPA28	AGPA31
APRILIA	ETX 350	350	1986			AGPA194
APRILIA	TUAREG 350	350	1986		AGPA28	AGPA31
APRILIA	TUAREG 350	350	1988	1989		AGPA31
APRILIA	TUAREG WIND 350	350	1987		AGPA28	
APRILIA	TUAREG WIND 350	350	1987	1988		AGPA31
APRILIA	400 SCARABEO IE	400	2007			AGPP31
APRILIA	MVX 450	450	2009		AGPA51	AGPP106
APRILIA	RXV 450	450	2006		AGPA51	AGPP106
APRILIA	SXV 450	450	2006		AGPA231	AGPP106
APRILIA	SXV 450 Van den Bosh Rep.	450	2008		AGPA128	AGPP106
APRILIA	500 ATLANTIC LEFT/REAR	500	2002	2005		AGPP31
APRILIA	500 ATLANTIC SPRINT	500	2006		AGPA99	AGPP31
APRILIA	500 SCARABEO	500	2003	2006		AGPP31
APRILIA	500 SCARABEO CLASS	500	2010			AGPP31
APRILIA	500 SCARABEO IE	500	2007			AGPP31
APRILIA	ATLANTIC 500 ATLANTIC RIGHT	500	2002	2005	AGPA52	
APRILIA	RXV 550	550	2006		AGPA51	AGPP106
APRILIA	SXV 550	550	2006		AGPA231	AGPP106
APRILIA	SXV 550 Van den Bosh Rep.	550	2008		AGPA128	AGPP106
APRILIA	600 TUAREG	600	1988			AGPA98
APRILIA	600 TUAREG	600	1986	1987		AGPA194
APRILIA	600 TUAREG WIND	600	1990			AGPA98
APRILIA	600 TUAREG WIND	600	1988			AGPA194
APRILIA	ETX 600	600	1986		AGPA28	AGPA31
APRILIA	ETX 600	600	1986			AGPA194
APRILIA	TUAREG 600	600	1986		AGPA28	AGPA31
APRILIA	TUAREG WIND 600	600	1988			AGPA31

MARCA Brand	MODELLO Model	CC	DA From	A To	ANT. Front	POST. Rear
APRILIA	650 MOTO	650	1995		AGPA92	AGPA98
APRILIA	650 PEGASO	650	1995		AGPA92	AGPA98
APRILIA	650 Pegaso Factory	650	2007	2009	AGPA231	
APRILIA	650 PEGASO I.E.	650	2001		AGPA92	
APRILIA	650 PEGASO I.E. TUSCANY TIBET RAID	650	2004		AGPA92	
APRILIA	650 PEGASO STRADA	650	2005		AGPA96	
APRILIA	650 PEGASO TRAIL	650	2006		AGPA92	AGPP91
APRILIA	650 STARCK	650	1996		AGPA92	AGPA98
APRILIA	PEGASO 650 FACTORY	650	2007			AGPP91
APRILIA	PEGASO 650 I E	650	2001			AGPP91
APRILIA	PEGASO 650 STRADA	650	2005			AGPP91
APRILIA	PEGASO 650 TUSCANY TIBET RIDE	650	2004			AGPP91
APRILIA	750 DORSODURO FACTORY	750	2012		AGPA96	AGPP91
APRILIA	SL 750 SHIVER GT, ABS	750	2009		AGPA101	AGPP91
APRILIA	SL 750 SHIVER, ABS	750	2007		AGPA101	AGPP91
APRILIA	SMV 750 DORSODURO	750	2008	2009	AGPA96	AGPP91
APRILIA	SMV 750 DORSODURO	750	2009		AGPA101	
APRILIA	NA 850 MANA	850	2007		AGPA101	AGPP91
APRILIA	NA 850 MANA GT, ABS	850	2009		AGPA101	AGPA28
APRILIA	NA 850 MANA, ABS	850	2008			AGPA28
APRILIA	SRV 850	850	2012			AGPA20
APRILIA	SRV 850	850	2012			AGPA46
APRILIA	1000 BLUE MARLIN	1000	2002		AGPA96	
APRILIA	BLUE MARLIN 1000	1000	2002			AGPA42
APRILIA	ETV 1000 CAPONORD	1000	2001		AGPA92	
APRILIA	ETV 1000 CAPONORD RALLY RAID	1000	2001			AGPA42
APRILIA	ETV 1000 CAPONORD RALLY RAID	1000	2004		AGPA92	AGPA42
APRILIA	RST 1000 FUTURA	1000	2001		AGPA96	AGPA29
APRILIA	RSV 1000 FACTORY PISTA	1000	2004		AGPA112	AGPA42
APRILIA	RSV 1000 FALCO SL, R	1000	2000		AGPA96	AGPA42
APRILIA	RSV 1000 MILLE	1000	1997	2002		AGPA42
APRILIA	RSV 1000 MILLE	1000	1997	2001	AGPA96	
APRILIA	RSV 1000 MILLE	1000	2002		AGPA112	
APRILIA	RSV 1000 MILLE NERA (RAD. CAL)	1000	2004		AGPA112	AGPA42
APRILIA	RSV 1000 MILLE R	1000	2000	2004		AGPA42

PASTIGLIE BRAKE PADS

INDICE ANALITICO PASTIGLIE / pads alphabetical index

MARCA Brand	MODELLO Model	CC	DA From	A To	ANT. Front	POST. Rear
APRILIA	RSV 1000 MILLE R	1000	2000		AGPA96	
APRILIA	RSV 1000 MILLE R	1000	2001	2002	AGPA112	
APRILIA	RSV 1000 MILLE R	1000	2004		AGPA112	
APRILIA	RSV 1000 MILLE R (RAD. CAL)	1000	2003		AGPA112	AGPA42
APRILIA	RSV 1000 MILLE R (RAD. CAL)	1000	2005		AGPA112	AGPA42
APRILIA	RSV 1000 MILLE R FACTORY (RAD. CAL)	1000	2004		AGPA112	AGPA42
APRILIA	RSV 1000 MILLE SP	1000	2000		AGPA96	AGPA42
APRILIA	RSV 1000 TUONO FIGHTER	1000	2003	2005	AGPA96	AGPA42
APRILIA	RSV 1000 TUONO R	1000	2003		AGPA112	AGPA42
APRILIA	RSV 1000 TUONO R (RAD. CAL), ABS	1000	2004		AGPA96	AGPA42
APRILIA	RSV 1000 TUONO R FACTORY, ABS	1000	2006		AGPA112	AGPA42
APRILIA	RSV 1000 TUONO V4 R	1000	2011	2014		AGPA42
APRILIA	RSV 1000 TUONO V4 R	1000	2014		AGPA177	
APRILIA	RSV 1000 TUONO V4 R	1000	2011	2013	AGPA96	
APRILIA	RSV4 1000 , ABS	1000	2009		AGPA106	AGPA42
APRILIA	RSV4-R 1000, ABS	1000	2010		AGPA106	AGPA42
APRILIA	RSV-4RR 1000	1000	2015		AGPA186	AGPA42
APRILIA	RSV 1100 TUONO V4	1100	2015		AGPA177	AGPA42
APRILIA	1200 CAPONORD	1200	2013		AGPA177	AGPP91
APRILIA	1200 CAPONORD RALLY	1200	2015		AGPA177	AGPP91
APRILIA	1200 DORSODURO, ABS	1200	2011		AGPA96	AGPP91
APRILIA	AF-1		1988			AGPA151
APRILIA	DITECH		2002			AGPP31
ARCTIC CAT						
ARCTIC CAT	50 DVX	50	2006			AGPA77
ARCTIC CAT	90 DVX	90	2006			AGPA77
ARCTIC CAT	250 DVX	250	2006	2009	AGPA173	AGPA43
ARCTIC CAT	300 DVX	300	2009		AGPA173	AGPA43
ARCTIC CAT	400 DVX	400	2004		AGPA111	AGPP165
ARMSTRONG						
ARMSTRONG	MX 500	500	1986		AGPA31	
ARMSTRONG	MX 500	500	1986		AGPA194	
ARMSTRONG	MX 600	600	1986		AGPA31	
ARMSTRONG	MX 600	600	1986		AGPA194	
ASPES						
ASPES	125 SINTESI	125	1988		AGPA33	AGPA194
ASPES	SINTESI 125	125	1988			AGPA31
ATALA						
ATALA	AT10	50	1997		AGPA14	
ATALA	AT10	50	1997		AGPA14	
ATALA	BYTE 50	50	1996		AGPA13	
ATALA	CAROSELLO 50	50	1997		AGPA13	
ATALA	HACKER 50	50	1995		AGPA13	

MARCA Brand	MODELLO Model	CC	DA From	A To	ANT. Front	POST. Rear
ATALA	HACKER 50	50	1996		AGPA13	
ATALA	SCHEGGIA 50	50	1998		AGPA13	
ATALA	SKEGGIA 50	50	1998		AGPA14	
ATK						
ATK	ATK 250 CC / MX	250	1991	1992	AGPA33	AGPA194
ATK	ATK CC/MX 250	250	1991	1992		AGPA31
ATK	ATK 350 ES / CC / MX / STD	350	1991	1992	AGPA33	AGPA194
ATK	ATK 350 GS	350	1993		AGPA194	AGPA194
ATK	ATK ES/CC/ MX/D 350	350	1991	1992		AGPA31
ATK	ATK GS 350	350	1993		AGPA31	AGPA31
ATK	ATK CC/MX 406	398	1991	1992		AGPA31
ATK	ATK 406 CC / MX	406	1991	1992	AGPA33	AGPA194
ATK	560	560	1987	1988		
ATK	ATK 560	560	1984	1988	AGPA31	
ATK	ATK 560	560	1984	1991	AGPA194	
ATK	ATK 560	560	1989	1991	AGPA33	
ATK	ATK ES/CC/ MX/D 604	562	1991	1992		AGPA31
ATK	ATK 604	604	1991		AGPA33	
ATK	ATK 604 ES / CC / MX / STD	604	1991	1992	AGPA33	AGPA194
ATK	ATK 604 QUADRACER	604	1990		AGPA33	
ATK	ATK 640	640	1993		AGPA31	AGPA31
ATK	ATK 640	640	1993		AGPA194	AGPA194
ATK	ALL MODELS 1994		1994		AGPA76	AGPA76
BAOXIN						
BAOXIN	BX 125 L	125	1997		AGPA22	
BETAVUS						
BATAVUS	GRAND PRIX		1980		AGPA98	
BENELLI						
BENELLI	491 GT	50	1997		AGPA13	
BENELLI	491 SPORT - RACING	50	1997		AGPA13	
BENELLI	50 49X (Quattro Nove)	50	2008	2013	AGPA222	
BENELLI	50 DEVIL	50	1992		AGPA33	
BENELLI	50 SPRING	50	1992		AGPA33	
BENELLI	CHRONO 50	50	1992	1993	AGPA15	
BENELLI	DEVIL 50	50	1992			AGPA16
BENELLI	K2 50 ALL MODELS	50	1998		AGPA13	AGPA13
BENELLI	KB-X 50 RACE	50			AGPA84	
BENELLI	NAKED 50	50	1998		AGPA13	
BENELLI	PEPE 50	50	1999		AGPA13	
BENELLI	SPRING 50	50	1992			AGPA16
BENELLI	DEVIL 80	80	1992			AGPA16
BENELLI	100 NAKED	100	2002		AGPA13	
BENELLI	K2 100 BIPOSTO	100	1999		AGPA13	
BENELLI	LX 100 PEPE	100	2002		AGPA13	
BENELLI	124 T	124	1983		AGPA194	
BENELLI	T 124	124	1983		AGPA31	
BENELLI	125 2CE	125	1976	1978	AGPA194	
BENELLI	125 CUSTOM	125	1985		AGPA194	
BENELLI	125 JARNO	125	1989		AGPA33	AGPA194
BENELLI	125 SPORT	125			AGPA194	

ACCOSSATO

PASTIGLIE BRAKE PADS

INDICE ANALITICO PASTIGLIE / pads alphabetical index

MARCA Brand	MODELLO Model	CC	DA From	A To	ANT. Front	POST. Rear
BENELLI	125 T 76	125	1976		AGPA194	
BENELLI	125 TT	125			AGPA194	
BENELLI	2CE 125	125	1976	1978	AGPA31	
BENELLI	666 125	125	1998			AGPA13
BENELLI	666 125 BORN IN HELL	125	1998		AGPA96	
BENELLI	ADIVA 125	125	2000		AGPA13	AGPP41
BENELLI	BX 125	125	1989		AGPA33	AGPA31
BENELLI	BX 125	125	1989			AGPA194
BENELLI	BXK 125	125	1988		AGPA31	
BENELLI	BXK 125	125	1988		AGPA194	
BENELLI	CAFFE' NERO RIGHT 125	125	2008		AGPA23	
BENELLI	CUSTOM 125	125	1985		AGPA31	
BENELLI	E 125 LC	125	1985		AGPA194	
BENELLI	E L.C. 125	125	1985		AGPA31	
BENELLI	JARNO 125	125	1989			AGPA31
BENELLI	SPORT 125	125			AGPA31	
BENELLI	T 125	125	1976		AGPA31	
BENELLI	TT 125	125			AGPA31	
BENELLI	VELVET 125	125	1999		AGPA13	AGPA13
BENELLI	VELVET 125 TOURING	125	2002	2003	AGPA13	AGPA13
BENELLI	ADIVA 150	150	2000		AGPA13	AGPP41
BENELLI	VELVET 150	150	1999		AGPA13	
BENELLI	VELVET 150 TOURING	150	2002	2003	AGPA13	AGPA13
BENELLI	304	230	1983		AGPA31	
BENELLI	250 2CE	250			AGPA194	
BENELLI	250 DISC	250	1976		AGPA194	
BENELLI	2CE 250	250			AGPA31	
BENELLI	CAFFE' NERO 250 (PINZA DX)	250	1996			AGPA13
BENELLI	CAFFE' NERO RIGHT 250	250	2008		AGPA23	
BENELLI	DISC 250	250	1976		AGPA31	
BENELLI	BN 302	300	2014		AGPA96	AGPA42
BENELLI	304	304	1983		AGPA194	
BENELLI	354	345,5	1978		AGPA31	
BENELLI	354	345,5	1979		AGPA31	
BENELLI	354	345,5	1980		AGPA31	
BENELLI	354	345,5	1981		AGPA31	
BENELLI	354	345,5	1982		AGPA31	
BENELLI	SPORT 354	345,5	1983		AGPA31	AGPA31
BENELLI	350 4T TURISMO	350				AGPA141
BENELLI	350 4T TURISMO	350			AGPA194	
BENELLI	4T TURISMO 350	350			AGPA31	
BENELLI	354	354	1978	1982		AGPA141
BENELLI	354	354	1978	1982	AGPA194	
BENELLI	354 SPORT	354	1983		AGPA194	AGPA194
BENELLI	VELVET 400 DUSK	400	2003		AGPA20	
BENELLI	BX 449 CROSS	449	2007		AGPA29	AGPP91
BENELLI	BX 449 SUPERMOTARD	449	2008		AGPA112	AGPP91
BENELLI	SPORT 654	498,5	1983		AGPA31	AGPA31
BENELLI	4 500	500	1976		AGPA31	
BENELLI	4T 500	500	1976		AGPA31	
BENELLI	500 4	500	1976		AGPA194	
BENELLI	500 4T	500	1976		AGPA194	AGPA141
BENELLI	505 ENDURO	505	2008		AGPA29	
BENELLI	BX 505 ENDURO	505	2008			AGPP91
BENELLI	BN 600	600	2013	2014		AGPA42
BENELLI	BN 600	600	2013		AGPA96	
BENELLI	BN 600	600	2014		AGPA112	
BENELLI	BN 600 GT	600	2014		AGPA112	AGPA42
BENELLI	654 SPORT	654	1983		AGPA194	AGPA194
BENELLI	750 SEI	750	1975		AGPA141	
BENELLI	756 CUE	756	2007	2010		AGPA42
BENELLI	756 CUE	756	2007	2009	AGPA112	
BENELLI	756 CUE	756	2010		AGPA96	
BENELLI	899 TREK	899	2007		AGPA96	AGPA42
BENELLI	TNT 899	899	2007		AGPA96	
BENELLI	TNT 899 CENTURY RACER	899	2011		AGPA112	
BENELLI	900 SEI	900	1984		AGPA141	AGPA141
BENELLI	900 TORNADO 3	900	2000	2002	AGPA96	AGPA194
BENELLI	900 TORNADO TRE	900	2003		AGPA112	AGPA42
BENELLI	900 TORNADO TRE RS (RAD. CAL)	900	2004		AGPA112	AGPA42
BENELLI	TNT 899	900	2007			AGPA42
BENELLI	TNT 899 CENTURY RACER	900	2011			AGPA42
BENELLI	TORNADO 3 900	900	2000	2002		AGPA31
BENELLI	TNT 1100	1100	2004		AGPA96	AGPA31
BENELLI	TNT 1100	1100	2004			AGPA194
BENELLI	TNT 1100	1100	2004			AGPA194
BENELLI	TNT 1130	1130	2005		AGPA96	AGPA42
BENELLI	TNT 1130 CAFE RACER	1130	2005		AGPA112	AGPA42
BENELLI	TNT 1130 CENTURY RACER	1130	2011		AGPA112	AGPA42
BENELLI	TNT 1130 OFFICINE	1130	2007		AGPA112	AGPA42
BENELLI	TNT 1130 SPORT	1130	2005		AGPA112	AGPA42
BENELLI	TNT 1130 TITANIUM	1130	2005		AGPA112	AGPA42
BENELLI	TNT 1130 TREK	1130	2006		AGPA96	AGPA42
BENELLI	TNT 1130 TREK AMAZONAS	1130	2007			AGPA42
BERINGER						
BERINGER	2 Piston Caliper - Road 1				AGPA198	
BERINGER	2 PISTON CLASSIC BILLET CALIPER					
BERINGER	6 Piston Caliper - Road 3				AGPA198	
BETA						
BETA	50 EIKON	50	2004			AGPP31
BETA	50 SUPERMOTARD	50	1999	2003	AGPA46	
BETA	AE FOUR TWIN 50	50	1988		AGPA16	
BETA	ALP 50	50	1991		AGPA16	
BETA	ARK 50 ALL MODELS	50	1996		AGPA13	AGPA13
BETA	CH 50	50	1994		AGPA13	
BETA	CHRONO 50 13	50	1994		AGPA13	
BETA	CRONO 50 502	50	1997		AGPA13	
BETA	CRONO 502 50	50	1997		AGPA31	
BETA	KR 50	50	1986	1987	AGPA31	
BETA	KR 50	50	1986	1987	AGPA194	
BETA	KR 50 TWIN	50	1988		AGPA194	AGPA194

PASTIGLIE BRAKE PADS

INDICE ANALITICO PASTIGLIE / pads alphabetical index

MARCA Brand	MODELLO Model	CC	DA From	A To	ANT. Front	POST. Rear
BETA	KR TWIN 50	50	1988			AGPA31
BETA	PRO RACE 12/10 50	50	2004		AGPA47	AGPA47
BETA	QUADRA 50	50	1995		AGPA13	
BETA	QUADRA 50	50	1997		AGPA31	
BETA	REV 50	50	2000		AGPA18	AGPA18
BETA	RR 50 ENDURO	50	2010		AGPA20	
BETA	RR 50 ENDURO	50	1999		AGPA46	
BETA	RR 50 ENDURO	50	2010		AGPA46	
BETA	RR 50 ENDURO	50	1999		AGPA70	
BETA	RR 50 ENDURO ALU	50	2004	2007	AGPA20	
BETA	RR 50 ENDURO ALU	50	2004	2007	AGPA46	
BETA	RR 50 MOTARD ALU	50	2004		AGPA46	
BETA	RR 50 PRO RACE	50	1998		AGPA70	
BETA	RR 50 PRO RACE	50	1998		AGPA46	
BETA	RR 50 STANDARD	50	1999		AGPA46	
BETA	RR 50 STANDARD	50	1999		AGPA70	
BETA	RR 50 SUPERMOTARD	50	2008		AGPA20	
BETA	RR 50 SUPERMOTARD	50	1999	2003	AGPA70	
BETA	RR 50 SUPERMOTARD ALU	50	2004	2005	AGPA20	
BETA	RV 50	50	1988		AGPA16	
BETA	ST 50	50	1997		AGPA18	AGPA18
BETA	SUPER TRIAL 50	50	1992		AGPA18	
BETA	TEMPO 50	50	1997	1998	AGPA31	
BETA	TEMPO 50	50	1999		AGPA13	
BETA	TEMPO 50 13	50	2000		AGPA13	
BETA	TEMPO 50 16	50	2000		AGPA13	
BETA	VRS 50	50	1986		AGPA16	
BETA	EVO 80	80	2009		AGPA45	
BETA	EVO JUNIOR 80	80	2010		AGPA18	AGPA18
BETA	REV 80	80	2008		AGPA45	
BETA	REV 80	80	2000	2007	AGPA18	AGPA18
BETA	125 EIKON	125	2004			AGPP31
BETA	125 EVO	125	2009			AGPP236
BETA	125 M4	125	2006			AGPP38
BETA	125 URBAN	125	2010			AGPP38
BETA	ALP 125	125	1999		AGPA18	AGPA18
BETA	ALP 125 4-STROKE	125	2000	2005	AGPA18	AGPA18
BETA	ALP 125 4-STROKE	125	2006			AGPP38
BETA	EIKON 125	125	2004		AGPA13	
BETA	EVO 125 2T	125	2009		AGPA45	
BETA	JONATHAN 125	125	1999		AGPA32	
BETA	JONATHAN 125	125	1999			AGPP91
BETA	REV 3 125	125	2000	2005	AGPA45	AGPA45
BETA	REV 3 125	125	2006		AGPA45	
BETA	RR 125 ENDURO 4T	125	2010			AGPP38
BETA	RR 125 SUPERMOTARD	125	2008			AGPP38

MARCA Brand	MODELLO Model	CC	DA From	A To	ANT. Front	POST. Rear
BETA	TR 125 34,35	125	1989	1990	AGPA18	AGPA18
BETA	TR 32	125	1986	1987	AGPA16	
BETA	TR 33	125	1986	1987	AGPA16	
BETA	TR 34	125	1988		AGPA16	
BETA	TRIAL 125	125	1997		AGPA18	
BETA	150 EIKON	150	2004			AGPP31
BETA	EIKON 150	150	2004		AGPA13	
BETA	200 EVO	200	2009			AGPP236
BETA	200 URBAN	200	2010			AGPP38
BETA	ALP 200 4-stroke	200	2000	2005	AGPA18	AGPA18
BETA	ALP 200 4-STROKE	200	2006			AGPP38
BETA	EVO 200 2T	200	2009		AGPA45	
BETA	REV 3 200	200	2006		AGPA45	
BETA	ALP 240	240	1992		AGPA18	
BETA	ALP 240	240	1996		AGPA18	AGPA31
BETA	ALP 240	240	1996			AGPA194
BETA	SUPER TRIAL 240	240	1992		AGPA18	
BETA	TR 33	240	1986	1988	AGPA16	
BETA	250 EVO (2-T / 4-T)	250	2009			AGPP236
BETA	250 TECHNO	250	1996		AGPA18	AGPA18
BETA	250 TECHNO	250	1999		AGPA18	AGPA18
BETA	4T REV 3 250	250	2007		AGPA45	
BETA	ALP 250	250	1992		AGPA18	
BETA	ALP 250	250	1997		AGPA18	AGPA18
BETA	CR 250	250	1983		AGPA31	
BETA	CR 250	250	1983		AGPA194	
BETA	EVO 250 2T/4T	250	2009		AGPA45	
BETA	REV 3 250	250	2000	2004	AGPA45	AGPA45
BETA	REV 3 250	250	2005		AGPA45	
BETA	RR 250	250	2005		AGPA51	AGPP106
BETA	ZERO 250	250	1991		AGPA18	
BETA	260 34, 35, ZERO	260	1989	1992	AGPA18	
BETA	ALP 260	260	1996		AGPA18	
BETA	ALP 260	260	1996	1998		AGPA194
BETA	SYNT	260	1992		AGPA16	
BETA	TR 34	260	1986	1988	AGPA16	
BETA	TR 35	260	1989	1991	AGPA16	
BETA	ZERO 260	260	1991		AGPA18	
BETA	ALP 260	261	1996			AGPA31
BETA	REV 3 270	275	2000	2004	AGPA45	AGPA45
BETA	REV 3 270	275	2005		AGPA45	
BETA	290 EVO	290	2009		AGPA45	AGPP236
BETA	300 Crosstrainer	300	2015		AGPA51	AGPP106
BETA	300 EVO	300	2009		AGPA45	AGPP236
BETA	RR 300	300	2013		AGPA51	AGPP106
BETA	350 4.0 MOTARD	350	2004			AGPA151
BETA	350 JONATHAN	350	2002		AGPA32	
BETA	350 M4	350	2006		AGPA32	AGPP38
BETA	ALP 350 4.0	350	2006			AGPP38
BETA	ALP 350 4.0	350	2004	2005		AGPA151
BETA	EURO 350	350	1999		AGPA32	AGPP91
BETA	JONATHAN 350	350	2002			AGPP91
BETA	MOTARD 350 4.0	350	2004		AGPA32	
BETA	RR 350 Efi	350	2015		AGPA51	AGPP106
BETA	RR 350 Efi Racing	350	2015		AGPA51	AGPP106

ACCOSSATO

PASTIGLIE BRAKE PADS

INDICE ANALITICO PASTIGLIE / pads alphabetical index

MARCA Brand	MODELLO Model	CC	DA From	A To	ANT. Front	POST. Rear
BETA	RR 350 Enduro	350	2012	2014	AGPA51	AGPP106
BETA	RR 390	385	2015		AGPA51	AGPP106
BETA	RR 400 Enduro	400	2005		AGPA51	AGPP106
BETA	RR 430	430	2015		AGPA51	AGPP106
BETA	RR 430 Racing	430	2015		AGPA51	AGPP106
BETA	RR 450 Cross Country	450	2012		AGPA51	AGPP106
BETA	RR 450 Enduro	450	2005		AGPA51	AGPP106
BETA	RR 480	480	2015		AGPA51	AGPP106
BETA	RR 480 RACING	480	2015		AGPA51	AGPP106
BETA	RR 498 Enduro	498	2012		AGPA51	AGPP106
BETA	500 GS / RV	500	1984		AGPA194	
BETA	GS / RV 500	500	1984		AGPA31	
BETA	RR 525 ENDURO	510	2005		AGPA51	
BETA	RR 525 Enduro	525	2005			AGPP106
BETA	SR 34		1989		AGPA18	
BILLET						
BILLET	6 PISTON CALIPER - ROAD/RACING 3				AGPA194	
BIMOTA						
BIMOTA	BBX 300 Enduro	300	2012		AGPA51	AGPP106
BIMOTA	YB7 400	400	1989		AGPA32	AGPA31
BIMOTA	YB7 400	400	1989			AGPA194
BIMOTA	V DUE 500	500	1997		AGPA32	AGPA31
BIMOTA	V DUE 500 TESI 2	500	1997			AGPA194
BIMOTA	600 BELLARIA	600	1991			AGPA194
BIMOTA	BELLARIA 600	600	1991			AGPA31
BIMOTA	BELLARIA 600 SPORT	600	1991		AGPA32	
BIMOTA	YB9 600 SRI	600	1997		AGPA32	
BIMOTA	YB9 600 SRI	600	1996			AGPA194
BIMOTA	YB9 600 SRI	600	1996			AGPA194
BIMOTA	YB9 SRI 600	600	1997			AGPA31
BIMOTA	BB1 650 SUPERMONO	650	1996			AGPA194
BIMOTA	SUPERMONO 650	650	1997		AGPA32	AGPA31
BIMOTA	SB7 750	750	1996		AGPA32	AGPA31
BIMOTA	SB7 750	750	1996			AGPA194
BIMOTA	SB7 750	750	1996			AGPA194
BIMOTA	YB4 750	750	1989		AGPA32	AGPA31
BIMOTA	YB4 750	750	1989			AGPA194
BIMOTA	YB4 750	750	1989			AGPA194
BIMOTA	1D 851 TESI	851	1991	1995		AGPA194
BIMOTA	1D 851 TESI	851	1991	1995		AGPA194
BIMOTA	1D TESI 851	851	1991		AGPA32	AGPA31
BIMOTA	900 MANTRA	900	1996			AGPA194
BIMOTA	900 MANTRA	900	1996			AGPA194
BIMOTA	DB2 900	900	1992		AGPA32	AGPA31
BIMOTA	DB2 900	900	1992			AGPA194
BIMOTA	DB2 900	900	1992			AGPA194
BIMOTA	DB4 900	900	1999			AGPA31
BIMOTA	DB4 900	900	1999			AGPA194
BIMOTA	DB4 900	900	1999			AGPA194
BIMOTA	MANTRA 900	900	1997		AGPA32	AGPA31
BIMOTA	1D 904 TESI SR / ES	904	1996			AGPA194
BIMOTA	1D 904 TESI SR / ES	904	1996			AGPA194
BIMOTA	1D TESI	904	1993			AGPA31
BIMOTA	1D TESI 906	904	1991			AGPA31
BIMOTA	DB2 904 HF / SR	904	1996			AGPA194
BIMOTA	DB2 904 HF / SR	904	1996			AGPA194
BIMOTA	TESI 906 1D	904	1991		AGPA32	
BIMOTA	1D 906 TESI	906	1991	1995		AGPA194
BIMOTA	1D 906 TESI	906	1991	1995		AGPA194
BIMOTA	2D 1000 TESI	1000	2004	2006	AGPA32	AGPA194
BIMOTA	2D 1000 TESI	1000	2004	2006		AGPA194
BIMOTA	2D TESI 1000	1000	2004	2006		AGPA31
BIMOTA	BB3 1000	1000	2014			AGPA42
BIMOTA	BB3 1000	1000	2014		AGPA186	
BIMOTA	DB5 1000 MILLE (RAD. CAL)	1000	2005	2011	AGPA112	AGPA42
BIMOTA	DB5 1000 S (RAD. CAL)	1000	2007	2011	AGPA112	AGPA42
BIMOTA	DB6 1000 DELIRIO (RAD. CAL)	1000	2007		AGPA112	AGPA42
BIMOTA	FURANO	1000	1992			AGPA31
BIMOTA	SB8 1000 R	1000	1998			AGPA194
BIMOTA	SB8 1000 R	1000	1998			AGPA194
BIMOTA	SB8 R 1000	1000	1998			AGPA31
BIMOTA	SB8K 1000	1000	2006			AGPA31
BIMOTA	SB8K 1000	1000	2006			AGPA194
BIMOTA	SB8K 1000 SANTAMONICA	1000	2007		AGPA112	AGPA194
BIMOTA	SB8K 1000 SANTAMONICA	1000	2007			AGPA31
BIMOTA	YB 6 1000	1000	1989		AGPA32	
BIMOTA	YB 8 1000	1000	1990		AGPA32	
BIMOTA	YB11 1000	1000	1997		AGPA32	AGPA31
BIMOTA	YB11 1000	1000	1997			AGPA194
BIMOTA	YB11 1000	1000	1997			AGPA194
BIMOTA	YB6 1000	1000	1989			AGPA31
BIMOTA	YB6 1000	1000	1989			AGPA194
BIMOTA	YB6 1000	1000	1989			AGPA194
BIMOTA	YB8 1000	1000	1990			AGPA31
BIMOTA	YB8 1000	1000	1990	1995		AGPA194
BIMOTA	YB8 1000	1000	1990	1995		AGPA194
BIMOTA	DIECI 1002	1002	1991			AGPA31
BIMOTA	YB11 1002 DIECI	1002	1991	1995		AGPA194
BIMOTA	YB11 1002 DIECI	1002	1991	1995		AGPA194
BIMOTA	YB11 1002 SUPERLEGGERA	1002	1996			AGPA194
BIMOTA	YB11 1002 SUPERLEGGERA	1002	1996			AGPA194
BIMOTA	DB10 1078 BIMOTARD	1078	2012		AGPA112	AGPA42
BIMOTA	DB5 1078 RE	1078	2012		AGPA112	AGPA42
BIMOTA	DB7 1098 (RAD. CAL)	1098	2008		AGPA112	AGPA42
BIMOTA	DB7 1099 (RAD. CAL)	1099	2009		AGPA186	AGPA194
BIMOTA	3D 1100 TESI (RAD. CAL)	1100	2007		AGPA112	AGPA42
BIMOTA	DB6R 1100 DELIRIO (RAD. CAL)	1100	2008		AGPA112	AGPA42

PASTIGLIE BRAKE PADS

INDICE ANALITICO PASTIGLIE / pads alphabetical index

MARCA Brand	MODELLO Model	CC	DA From	A To	ANT. Front	POST. Rear
BIMOTA	DB7 (RAD. CAL) 1099	1100	2009			AGPA31
BIMOTA	DBX 1100	1100	2013		AGPA92	
BIMOTA	SB 6 1100	1100	1997		AGPA32	AGPA31
BIMOTA	SB6 1100	1100	1996			AGPA194
BIMOTA	SB6 1100	1100	1996			AGPA194
BIMOTA	SB6 1100 R	1100	1997			AGPA194
BIMOTA	SB6 1100 R	1100	1997			AGPA194
BIMOTA	DB8 1198 (RAD. CAL)	1198	2010		AGPA186	AGPA42
BIMOTA	DB11 1200 VLX (RAD. CAL)	1200	2013		AGPA186	AGPA42
BIMOTA	DB12 1200	1200	2012		AGPA112	AGPA42
BIMOTA	DB9 1200 BRIVIDO	1200	2012		AGPA112	AGPA42
BIMOTA	1D TESI		1993		AGPA32	AGPA194
BIMOTA	ALL MODELS		1982	1988	AGPA141	AGPA141
BIMOTA	ALL MODELS		1989	1998		AGPA194
BIMOTA	BBX 508 ENDURO		2012		AGPA51	AGPP90
BIMOTA	DB2		1992			AGPA194
BIMOTA	DIECI 1002		1991		AGPA32	
BIMOTA	FURANO		1992		AGPA32	AGPA194
BIMOTA	SB3 D		1983		AGPA141	AGPA141
BLATA						
BLATA	125 ENDURO	125	2007		AGPA142	AGPA18
BLATA	125 ENDURO	125	2007		AGPA175	
BLATA	125 MOTARD	125	2007		AGPA175	AGPA18
BLATA	125 MOTARD	125	2007		AGPA142	
BMW						
BMW	125 C1	125	2000		AGPA92	AGPP91
BMW	200 C1	200	2002		AGPA92	AGPP91
BMW	G 450 ENDURO	450	2008		AGPA29	AGPP80
BMW	G 450 SMR	450	2009		AGPA112	AGPP80
BMW	C 600 SPORT	600	2012		AGPA72	AGPA72
BMW	C 650 GT	650	2012		AGPA72	AGPA72
BMW	F 650 , ST	650	1994	2000	AGPA92	AGPP91
BMW	F 650 CS SCARVER	650	2002	2006	AGPA92	AGPP91
BMW	F 650 GS	650	2008		AGPA92	AGPP91
BMW	F 650 GS DAKAR	650	2001	2007	AGPA92	AGPP91
BMW	F 650 GS, RALLYE	650	2001	2007	AGPA92	AGPP91
BMW	G 650 GS SERTAO	650	2012		AGPA92	AGPP91
BMW	G 650 XCHALLENGE	650	2007		AGPA92	AGPP91
BMW	G 650 XCOUNTRY	650	2007		AGPA92	AGPP91
BMW	G 650 XMOTO	650	2007			AGPP91
BMW	R65 650 GS	650	1987		AGPA141	
BMW	R65 650 GS	650	1991		AGPA141	
BMW	R65 650 LS	650	1982		AGPA141	
BMW	R65/1 650	650	1986			AGPA141
BMW	F 700 GS	700	2013		AGPA92	AGPP91
BMW	K75 750	750	1990			AGPA141
BMW	K75 750 C	750	1985		AGPA141	
BMW	K75 750 RT	750	1991			AGPA141
BMW	K75 750 S, C	750	1985		AGPA141	AGPA141
BMW	F 800 GS	800	2008		AGPA92	AGPP91
BMW	F 800 GS	800	2013		AGPA92	AGPP91
BMW	F 800 GT	800	2013			AGPP91
BMW	F 800 R	800	2009	2015		AGPP91
BMW	F 800 R	800	2015		AGPA177	
BMW	F 800 S	800	2006			AGPP91
BMW	F 800 ST	800	2006			AGPP91
BMW	F 800 ST TOURING	800	2011			AGPP91
BMW	R80 800	800	1985		AGPA141	
BMW	R80 800 G/S P.-D.	800	1986		AGPA141	
BMW	R80 800 GS	800	1981		AGPA141	
BMW	R80 800 GS	800	1991		AGPA141	
BMW	R80 800 R	800	1991			AGPA141
BMW	R80 800 RT	800	1983		AGPA141	
BMW	R80/7 800	800	1979	1981		AGPA141
BMW	R 850 C	850	1999		AGPA178	AGPP97
BMW	R 850 GS	850	1999		AGPA178	AGPP97
BMW	R 850 R	850	2003		AGPA57	AGPP97
BMW	R 850 R	850	1996		AGPA178	AGPP97
BMW	R 850 RT	850	1996	2001	AGPA178	AGPP91
BMW	R 850 RT WITH INTEGRAL ABS	850	2001		AGPA56	AGPP97
BMW	K1 1000	1000	1989			AGPA141
BMW	K100 1000 LT	1000	1987		AGPA141	AGPA141
BMW	K100 1000 LT	1000	1992			AGPA141
BMW	K100 1000 LT ABS	1000	1989			AGPA141
BMW	K100 1000 RS	1000	1990			AGPA141
BMW	K100 1000 RS ABS	1000	1988	1989		AGPA141
BMW	K100 1000 RS, RT	1000	1983		AGPA141	AGPA141
BMW	R100 1000	1000	1981		AGPA141	AGPA141
BMW	R100 1000 CS,RS, RT	1000	1981		AGPA141	AGPA141
BMW	R100 1000 R	1000	1991			AGPA141
BMW	R100 1000 RS	1000	1976	1980		AGPA141
BMW	R100 1000 RS	1000	1993			AGPA141
BMW	R100 1000 S	1000	1978	1980		AGPA141
BMW	R100 1000 T	1000	1979			AGPA141
BMW	S 1000 R	1000	2014		AGPA55	AGPP91
BMW	S 1000 RR	1000	2009	2015	AGPA55	AGPP91
BMW	S 1000 RR HP4	1000	2013	2014	AGPA186	AGPP91
BMW	S 1000 XR	1000	2015		AGPA177	
BMW	K1100 LT/SE	1100	1992			AGPA141
BMW	K1100 RS	1100	1993			AGPA141
BMW	R 1100 GS	1100	1999		AGPA178	AGPP97
BMW	R 1100 R	1100	1999		AGPA178	AGPP97
BMW	R 1100 RT	1100	1995		AGPA178	AGPP97
BMW	R 1100 S	1100	1999	2000	AGPA178	AGPP97
BMW	R 1100 S WITH INTEGRAL ABS	1100	2001		AGPA57	AGPP97
BMW	R 1100 S WITHOUT INTEGRAL ABS	1100	2001		AGPA56	AGPP97
BMW	R 1100 GS	1100	1994		AGPA178	AGPP97
BMW	R1100 RS	1100	1994		AGPA178	AGPA141
BMW	R1100 RS	1100	1993			AGPA141
BMW	R 1150 GS, GS ADVENTURER	1130	2002		AGPA56	AGPP97
BMW	R 1150 R	1130	2001		AGPA57	AGPP97
BMW	R 1150 R ROCKSTER	1130	2003		AGPA57	AGPP97

ACCOSSATO

PASTIGLIE BRAKE PADS

INDICE ANALITICO PASTIGLIE / pads alphabetical index

MARCA Brand	MODELLO Model	CC	DA From	A To	ANT. Front	POST. Rear
BMW	R 1150 RS	1130	2001		AGPA57	AGPP97
BMW	R 1150 RT WITH INTEGRAL ABS	1130	2001		AGPA56	AGPP97
BMW	R 1150 GS	1150	2000	2001	AGPA178	AGPP97
BMW	1200 HP2 ENDURO	1200	2006		AGPA92	
BMW	1200 HP2 MEGAMOTO	1200	2007		AGPA56	AGPP97
BMW	1200 HP2 SPORT	1200	2008	2010	AGPA186	AGPA29
BMW	K 1200 GT WITH INTEGRAL ABS	1200	2002	2007	AGPA56	AGPA141
BMW	K 1200 LT	1200	1999	2000	AGPA178	AGPP224
BMW	K 1200 LT With Integral ABS	1200	2001	2008	AGPA57	AGPP224
BMW	K 1200 R	1200	2005	2008	AGPA57	AGPP97
BMW	K 1200 R SPORT	1200	2007		AGPA57	AGPP97
BMW	K 1200 RS	1200	1997	2003		AGPA141
BMW	K 1200 RS	1200	1997	2000	AGPA178	
BMW	K 1200 RS	1200	2001	2003	AGPA56	
BMW	K 1200 S	1200	2005	2008	AGPA56	AGPP97
BMW	R 1200 C	1200	1998	2002	AGPA178	AGPP97
BMW	R 1200 C CLASSIC	1200	2003	2004	AGPA57	AGPP97
BMW	R 1200 C INDEPENDENT	1200	2003		AGPA57	AGPP97
BMW	R 1200 C MONTAUK	1200	2004		AGPA57	AGPP97
BMW	R 1200 CL	1200	2003	2004		AGPP224
BMW	R 1200 CL	1200	2003		AGPA57	
BMW	R 1200 GS	1200	2013	2014	AGPA177	AGPA92
BMW	R 1200 GS	1200	2004	2012	AGPA56	AGPP97
BMW	R 1200 GS ADVENTURE	1200	2014		AGPA177	AGPA92
BMW	R 1200 GS TRIPLE BLACK	1200	2011		AGPA56	AGPP97
BMW	R 1200 NINE-T	1200	2014		AGPA177	
BMW	R 1200 R	1200	2015		AGPA177	AGPA92
BMW	R 1200 R	1200	2007	2014	AGPA57	AGPP97
BMW	R 1200 RS	1200	2015		AGPA177	AGPA92
BMW	R 1200 RT	1200	2014		AGPA177	AGPA92
BMW	R 1200 RT	1200	2006	2013	AGPA56	AGPP97
BMW	R 1200 S	1200	2006		AGPA56	AGPP97
BMW	R 1200 ST	1200	2006		AGPA56	AGPP97
BMW	K 1300 GT	1300	2009		AGPA56	
BMW	K 1300 R	1300	2009		AGPA57	AGPP97
BMW	K 1300 R DYNAMIC	1300	2011		AGPA57	AGPP97
BMW	K 1300 S	1300	2009		AGPA56	AGPP97
BMW	K 1600 GT	1600	2011		AGPA57	AGPA92
BMW	K 1600 GTL	1600	2011		AGPA57	AGPA92
BMW	C EVOLUTION		2012		AGPA72	AGPA72
BOMBARDIER						
BOMBARDIER	200 RALLY 2X4	200	2003	2006	AGPA82	AGPA98
BOMBARDIER	DS 250 LEFT/ REAR	250	2006		AGPA113	AGPA113
BOMBARDIER	DS 250 RIGHT	250	2006		AGPA115	
BOMBARDIER	330 OUTLANDER LEFT/REAR	330	2003	2006	AGPA113	AGPA113
BOMBARDIER	330 OUTLANDER RIGHT	330	2003	2006	AGPA115	
BOMBARDIER	400 OUTLANDER LEFT/REAR	400	2003	2006	AGPA113	AGPA113
BOMBARDIER	400 OUTLANDER MAX LEFT/REAR	400	2003	2006	AGPA113	AGPA113
BOMBARDIER	400 OUTLANDER MAX RIGHT	400	2003	2006	AGPA115	
BOMBARDIER	400 OUTLANDER RIGHT	400	2003	2006	AGPA115	
BOMBARDIER	500 QUEST LEFT/REAR	500	2002	2006	AGPA113	AGPA113
BOMBARDIER	500 QUEST RIGHT	500	2002	2006	AGPA115	
BOMBARDIER	500 TRAXTER 4X4	500	1999	2000		AGPA42
BOMBARDIER	500 TRAXTER 4X4 LEFT/REAR	500	2001	2006	AGPA113	AGPA115
BOMBARDIER	500 TRAXTER 4X4 RIGHT	500	2001	2006	AGPA115	
BOMBARDIER	500 TRAXTER MAX LEFT/REAR	500	2003	2005	AGPA113	AGPA115
BOMBARDIER	500 TRAXTER MAX RIGHT	500	2003	2005	AGPA115	
BOMBARDIER	650 QUEST LEFT/REAR	650	2002	2006	AGPA113	AGPA113
BOMBARDIER	650 QUEST MAX LEFT/REAR	650	2003	2006	AGPA113	AGPA115
BOMBARDIER	650 QUEST MAX RIGHT	650	2003	2006	AGPA115	
BOMBARDIER	650 QUEST RIGHT	650	2002	2006	AGPA115	
BOMBARDIER	650 TRAXTER MAX LEFT/REAR	650	2003	2005	AGPA113	AGPA115
BOMBARDIER	650 TRAXTER MAX RIGHT	650	2003	2005	AGPA115	
BOMBARDIER	DS 650 LEFT/ REAR	650	2001	2006	AGPA113	AGPA113
BOMBARDIER	DS 650 RIGHT	650	2001	2006	AGPA115	
BOMBARDIER	800 OUTLANDER LEFT/REAR	800	2006		AGPA113	AGPA113
BOMBARDIER	800 OUTLANDER RIGHT	800	2006		AGPA115	
BOMBARDIER	800 OUTLANDER XT LEFT/REAR	800	2006		AGPA113	AGPA113
BOMBARDIER	800 OUTLANDER XT RIGHT	800	2006		AGPA115	
BORILE						
BORILE	B 500 CR, MT	500	2002		AGPA32	AGPP91
BRAKING						
BRAKING	FRONT CROSS					
BRAKING	REAR CROSS (1 PISTON)					AGPP72
BRAKING	STREET, SUPERMOTARD					
BREMBO						
BREMBO	P 30 A - Road 1				AGPA198	
BREMBO	4 Piston Caliper - Racing				AGPA208	
BREMBO	GP X10.48.13/14, RACING				AGPA128	
BREMBO	RADIAL MONOBLOCK X99C460/61, P4 34				AGPA134	
BREMBO	GOLDLINE ROAD 20.5161.42/51,					

PASTIGLIE BRAKE PADS

INDICE ANALITICO PASTIGLIE / pads alphabetical index

MARCA Brand	MODELLO Model	CC	DA From	A To	ANT. Front	POST. Rear
BREMBO	BILLET 20.4756.52/62, RACING					
BREMBO	GOLDLINE SINGLE PIN 20.5165.55/65, ROAD					
BREMBO	GOLDLINE 20.6951.50, ROAD					
BREMBO	SUPERSPORT 120A44110, P2 34					
BREMBO	MOTOCROSS CALIPER 22.2180.20					AGPP91
BREMBO	100 MM MOTARD RADIAL XA78910, P4 30/34					
BREMBO	100 MM RADIAL 220A16810, P4 30/34					
BREMBO	100 MM RADIAL 220A80310, P4 30/34					
BREMBO	108 MM MOTARD RADIAL XA69510, P4 30/34					
BREMBO	108 MM RADIAL 220A01610, P4 30/34					
BREMBO	108 MM RADIAL 220A80210, P4 30/34					
BREMBO	GOLDLINE TWO PIN 20.6800, ROAD					
BREMBO	RADIAL 220A16820, P4 30/34					
BREMBO	100 MM RADIAL CALIPER .484, 220B47310, P4 32					
BREMBO	100 MM RADIAL MONOBLOCK 220988530, P4 34					
BREMBO	108 MM RADIAL CALIPER .484, 220B47310, P4 32					
BREMBO	108 MM RADIAL MONOBLOCK 220A39710, P4 34					
BREMBO	RADIAL GP4 RX 220B01010					
BREMBO	GOLDLINE 4 PAD 20.7850.11/21, ROAD					
BREMBO	MOTARD AXIAL XA32950, P4 34				AGPA112	
BREMBO	RADIAL MONOBLOCK XA8Y310/11		2011	2011	AGPA137	
BREMBO	108N, P2 38					
BREMBO	F08					

MARCA Brand	MODELLO Model	CC	DA From	A To	ANT. Front	POST. Rear
BS VILLA						
BS VILLA	AX 50	50	1993		AGPA84	
BS VILLA	GZ 50	50	1993		AGPA84	
BUELL						
BUELL	500 BLAST	500	2001	2009	AGPA72	AGPP89
BUELL	XB9R 984 FIREBOLT	984	2002	2010	AGPA227	AGPP89
BUELL	XB9S 984 Lightning	984	2003	2010	AGPA227	AGPP89
BUELL	XB9SX 984 CityX	984	2005	2010	AGPA227	AGPP89
BUELL	1125 CR	1125	2009	2010	AGPA232	
BUELL	1125 R	1125	2008	2010	AGPA232	
BUELL	M2 1200 CYCLONE	1200	1998	2002	AGPA124	AGPP89
BUELL	RS 1200 HF	1200				AGPA98
BUELL	S1 1200 LIGHTNING	1200	1998	2002	AGPA124	AGPP89
BUELL	S1 1200 WHITELIGHTNING	1200	1998	2002	AGPA124	AGPP89
BUELL	S3 1200 THUNDERBOLT	1200	1998	2002	AGPA124	AGPP89
BUELL	X1 1200 LIGHTNING	1200	2001	2002	AGPA124	AGPP89
BUELL	XB12R 1200 FIREBOLT	1200	2004	2010	AGPA232	AGPP89
BUELL	XB12R 1200 Firebolt	1200	2004	2008	AGPA227	
BUELL	XB12S 1200 Lightning	1200	2004	2008	AGPA227	AGPP89
BUELL	XB12Scg 1200 Lightning	1200	2006	2008	AGPA227	
BUELL	XB12SCG 1200 LIGHTNING	1200	2006	2010		AGPP89
BUELL	XB12Scg 1200 Lightning	1200	2009	2010	AGPA232	
BUELL	XB12Ss 1200 Lightning Long	1200	2006	2008	AGPA227	
BUELL	XB12SS 1200 LIGHTNING LONG	1200	2006	2010		AGPP89
BUELL	XB12Ss 1200 Lightning Long	1200	2009	2010	AGPA232	
BUELL	XB12STT 1200 Super TT	1200	2007	2010	AGPA227	AGPP89
BUELL	XB12X 1200 ULYSSES	1200	2006	2010	AGPA227	AGPP89
BUELL	ALL MODELS		1994	1997		AGPA98
BULTACO						
BULTACO	50 ASTRO	50	2001		AGPA70	
BULTACO	50 LOBITO	50	1999		AGPA70	
CAGIVA						
CAGIVA	50 CITY	50	1995		AGPA102	
CAGIVA	50 CITY	50	2008		AGPA84	
CAGIVA	50 COCIS	50	1989		AGPA194	AGPA194
CAGIVA	50 COCIS	50	1988		AGPA194	
CAGIVA	50 LUCKY EXPLORER	50	1988		AGPA194	AGPA151
CAGIVA	50 MITO	50	1999		AGPA79	
CAGIVA	50 Nag	50	2008		AGPA222	
CAGIVA	50 PRIMA	50	1992		AGPA194	AGPA194
CAGIVA	50 SUPERCITY	50	1993			AGPA194
CAGIVA	50 SUPERCITY	50	1992		AGPA194	AGPA194
CAGIVA	50 W4	50	1992		AGPA194	AGPA194

ACCOSSATO

PASTIGLIE BRAKE PADS

INDICE ANALITICO PASTIGLIE / pads alphabetical index

MARCA Brand	MODELLO Model	CC	DA From	A To	ANT. Front	POST. Rear
CAGIVA	COCIS 50	50	1989		AGPA31	AGPA31
CAGIVA	CUCCIOLO 50	50	1997		AGPA31	
CAGIVA	LUCKY EXPLORER 50	50	1988		AGPA31	
CAGIVA	NUVOLA 50	50	2000		AGPA31	
CAGIVA	PRIMA 50	50	1992		AGPA31	AGPA31
CAGIVA	PRIMA 50	50	1993			AGPA27
CAGIVA	SUPERCITY 50	50	1993			AGPA31
CAGIVA	SUPERCITY 50	50	1992		AGPA31	AGPA31
CAGIVA	W 4 50	50	1992		AGPA31	AGPA31
CAGIVA	80 COCIS	80	1991		AGPA194	AGPA151
CAGIVA	80 SUPER CITY	80	1992	1993	AGPA194	AGPA194
CAGIVA	80 SUPER CITY	80	1994			AGPA194
CAGIVA	80 W4	80	1992		AGPA194	AGPA194
CAGIVA	CITY 80	80	1993			AGPA27
CAGIVA	COCIS 80	80	1991		AGPA31	
CAGIVA	LR 80	80	1983		AGPA31	
CAGIVA	LR 80	80	1983		AGPA194	
CAGIVA	PRIMA 80	80	1992			AGPA27
CAGIVA	SST 80	80	1983		AGPA31	
CAGIVA	SST 80	80	1983		AGPA194	
CAGIVA	SUPERCITY 80	80	1994			AGPA31
CAGIVA	SUPERCITY 80	80	1992	1993	AGPA31	AGPA31
CAGIVA	SXT 80	80	1983		AGPA31	
CAGIVA	SXT 80	80	1983		AGPA194	
CAGIVA	W 4 80	80	1992		AGPA31	
CAGIVA	110 PASSING	110	1994		AGPA76	
CAGIVA	125 ALETTA ELECTRA	125	1983	1986	AGPA151	
CAGIVA	125 ALETTA ELECTRA	125	1987		AGPA194	
CAGIVA	125 ALETTA ORO	125			AGPA151	AGPA151
CAGIVA	125 ALETTA ORO	125	1986		AGPA194	AGPA194
CAGIVA	125 BLUES	125	1995			AGPA194
CAGIVA	125 Brillo	125	2008		AGPA222	
CAGIVA	125 CROSS	125	1986			AGPA98
CAGIVA	125 CRUISER	125				AGPA151
CAGIVA	125 DAKAR	125	1986		AGPA194	
CAGIVA	125 E2	125	1986		AGPA151	
CAGIVA	125 ELEFANT	125	1981		AGPA151	
CAGIVA	125 ELEFANT RE	125	1987		AGPA194	
CAGIVA	125 ENDURO	125	1986		AGPA194	
CAGIVA	125 FRECCIA	125	1989			AGPA194
CAGIVA	125 FRECCIA C12 R	125	1991			AGPA194
CAGIVA	125 MITO	125	1993		AGPA32	AGPA194
CAGIVA	125 MITO EV / SP	125	1995			AGPA194
CAGIVA	125 MITO RACER	125	1991	1992		AGPA194
CAGIVA	125 N1	125	1997			AGPA194
CAGIVA	125 PLANET	125	1998	2002		AGPA194
CAGIVA	125 PLANET	125	1997		AGPA32	
CAGIVA	125 RAPTOR	125	2003		AGPA32	AGPA194
CAGIVA	125 SST	125	1981		AGPA151	
CAGIVA	125 STELLA	125	1997		AGPA79	
CAGIVA	125 SUPERCITY	125	1992	1995		AGPA194
CAGIVA	125 SUPERCITY	125	1998			AGPA194
CAGIVA	125 TAMANACO	125				AGPA151
CAGIVA	125 W 8	125	1996			AGPA98
CAGIVA	125 WSTX ALETTA ROSSA	125	1983		AGPA151	
CAGIVA	ALETTA ELECTRA 125	125	1987		AGPA31	

MARCA Brand	MODELLO Model	CC	DA From	A To	ANT. Front	POST. Rear
CAGIVA	ALETTA ORO 125	125	1986		AGPA31	AGPA31
CAGIVA	BLUES 125	125			AGPA28	AGPA31
CAGIVA	BLUES 125	125	1993		AGPA31	AGPA31
CAGIVA	CRUISER 125	125	1988			AGPA31
CAGIVA	CUCCIOLO 125	125	2000		AGPA31	
CAGIVA	DAKAR 125	125	1986		AGPA31	
CAGIVA	ELEFANTRE 125	125	1987		AGPA31	
CAGIVA	ENDURO 125	125	1986		AGPA31	
CAGIVA	FRECCIA 125	125	1989			AGPA31
CAGIVA	FRECCIA C 12 R 125	125	1991			AGPA31
CAGIVA	K7 125	125	1991			AGPA31
CAGIVA	K7 125	125	1991			AGPA194
CAGIVA	MITO 125	125	1991	1993		AGPA31
CAGIVA	MITO 125 EDDY	125	1993		AGPA32	
CAGIVA	MITO 125 EURO 2	125	2005		AGPA32	
CAGIVA	MITO 125 EV	125	1994	2003	AGPA32	
CAGIVA	MITO 2 125 PRODUCTION RACER	125	1994		AGPA32	
CAGIVA	N1 125	125	1996			AGPA31
CAGIVA	N90 125	125	1991			AGPA151
CAGIVA	NUVOLA 125	125	2000		AGPA31	
CAGIVA	PLANET 125	125	1997		AGPA32	AGPA31
CAGIVA	RAPTOR 125	125	2003		AGPA32	AGPA31
CAGIVA	ROADSTER 125	125	1994		AGPA28	
CAGIVA	ROADSTER 125	125	1996		AGPA28	
CAGIVA	SP 525 MITO	125	2008		AGPA32	
CAGIVA	SP MITO 525	125	2008			AGPA31
CAGIVA	SUPERCITY 125	125	1992			AGPA31
CAGIVA	TAMANACO 125	125	1989			AGPA31
CAGIVA	W 8 125	125	1992	1995	AGPA31	AGPA31
CAGIVA	W8 125	125	1992		AGPA194	AGPA194
CAGIVA	WMX 125	125	1989	1990		AGPA98
CAGIVA	WMX 125 GP REPLICA	125	1986		AGPA194	
CAGIVA	WMX GP-REPLICA 125	125	1986		AGPA31	
CAGIVA	WRX 125	125			AGPA31	
CAGIVA	WRX 125	125	1983		AGPA194	
CAGIVA	200 ALETTA ELECTRA	200	1983		AGPA151	
CAGIVA	200 CROSS	200	1983		AGPA151	
CAGIVA	200 ELEFANT	200	1986		AGPA194	
CAGIVA	ELEFANT 200	200	1986		AGPA31	
CAGIVA	ROADSTER 200	200	1996		AGPA28	
CAGIVA	MXR 250	250	1982		AGPA31	
CAGIVA	MXR 250	250	1982		AGPA194	
CAGIVA	SST 250 ALA VERDE	250	1981		AGPA194	
CAGIVA	SST ALA VERDE 250	250	1981		AGPA31	
CAGIVA	WMX 250	250	1989	1990		AGPA98
CAGIVA	WMX 250 GP	250	1982		AGPA194	
CAGIVA	WMX GP 250	250	1982		AGPA31	
CAGIVA	350 ALAZURRA	350	1985		AGPA194	AGPA194
CAGIVA	350 ELEFANT	350	1986			AGPA194
CAGIVA	350 W 12	350	1992			AGPA194
CAGIVA	ALAZURRA 350	350	1985		AGPA31	AGPA31
CAGIVA	ALAZURRA 350	350	1987		AGPA31	AGPA31
CAGIVA	ELEFANT 350	350	1986			AGPA31
CAGIVA	SST 350	350	1983		AGPA31	

PASTIGLIE BRAKE PADS

INDICE ANALITICO PASTIGLIE / pads alphabetical index

MARCA Brand	MODELLO Model	CC	DA From	A To	ANT. Front	POST. Rear
CAGIVA	SST 350	350	1983		AGPA194	
CAGIVA	SST 350 ALA VERDE	350	1981		AGPA194	
CAGIVA	SST ALA VERDE 350	350	1981		AGPA31	
CAGIVA	SXT 350 ALA ROSSA	350	1982		AGPA194	
CAGIVA	SXT ALA ROSA 350	350	1982		AGPA31	
CAGIVA	T4 350 E	350	1987		AGPA194	
CAGIVA	T4 350 R	350	1987		AGPA194	
CAGIVA	T4 E 350	350	1987		AGPA31	
CAGIVA	T4 R 350	350	1987		AGPA31	
CAGIVA	W 12 350	350	1992			AGPA31
CAGIVA	MXR 400	400	1982		AGPA31	
CAGIVA	MXR 400	400	1982		AGPA194	
CAGIVA	500 RIVER	497	2000		AGPA32	AGPA194
CAGIVA	500 MITO	500	2007			AGPA194
CAGIVA	500 MITO	500	2007			AGPA194
CAGIVA	CANYON 500	500	1999			AGPA77
CAGIVA	MITO 500	500	2007		AGPA32	AGPA31
CAGIVA	MXR 500	500	1982		AGPA31	
CAGIVA	MXR 500	500	1982		AGPA194	
CAGIVA	RIVER 500	500	2000		AGPA32	AGPA31
CAGIVA	T4 500 E	500	1987		AGPA194	
CAGIVA	T4 E 500	500	1987		AGPA31	
CAGIVA	WMX 500	500	1985	1986	AGPA31	
CAGIVA	WMX 500	500	1985	1986	AGPA194	
CAGIVA	WMX 500 CROSS	500	1987		AGPA194	AGPA194
CAGIVA	WMX CROSS 500	500	1987		AGPA31	AGPA31
CAGIVA	SP 525 MITO	525	2008			AGPA194
CAGIVA	SP 525 MITO	525	2008			AGPA194
CAGIVA	600 CANYON	600	1995		AGPA76	
CAGIVA	600 RIVER	600	1994	1995		AGPA194
CAGIVA	600 W 16	600	1995			AGPA98
CAGIVA	CANYON 600	600	1995			AGPA77
CAGIVA	RIVER 600	600	1994		AGPA32	AGPA31
CAGIVA	650 ALAZURRA	650			AGPA194	AGPA194
CAGIVA	650 ELEFANT	650	1986			AGPA194
CAGIVA	650 RAPTOR	650	2001		AGPA96	AGPA42
CAGIVA	650 V-RAPTOR	650	2001		AGPA96	AGPA42
CAGIVA	ALAZURRA 650	650			AGPA31	AGPA31
CAGIVA	ELEFANT 650	650	1986			AGPA31
CAGIVA	750 ELEFANT	750	1988		AGPA194	AGPA194
CAGIVA	750 LUCKY EXPLORER	750	1988			AGPA194
CAGIVA	E 750	750	1996		AGPA29	AGPA29
CAGIVA	ELEFANT 750	750	1988		AGPA31	AGPA31
CAGIVA	ELEFANT 750	750	1994	1995		AGPA29
CAGIVA	LUCKY EXPLORER 750	750	1988			AGPA31
CAGIVA	900 CAT	900	1993		AGPA72	
CAGIVA	CANYON 900 I.E.	900	1997			AGPA77
CAGIVA	E 900	900	1996		AGPA29	AGPA29
CAGIVA	ELEFANT 900	900	1993	1995	AGPA29	AGPA29
CAGIVA	ELEFANT 900 I.E. - GT - AC	900	1991			AGPA77
CAGIVA	GRAN CANYON 900	900	1999		AGPA72	AGPA77
CAGIVA	1000 RAPTOR	1000	2000		AGPA96	AGPA42
CAGIVA	1000 V-RAPTOR	1000	2000		AGPA96	AGPA42
CAGIVA	1000 X3 RAPTOR	1000	2004		AGPA112	AGPA42
CAGIVA	1000 X-RAPTOR	1000	2003		AGPA112	AGPA42
CAGIVA	1000 XTRA RAPTOR	1000	2002		AGPA96	AGPA42
CAGIVA	NAVIGATOR 1000	1000	2000		AGPA72	AGPA77
CAGIVA	500 MITO		2007		AGPA32	
CAN-AM						
CAN-AM	DS 90 X	90	2008		AGPA82	AGPA82
CAN-AM	ASE 200	200	1986		AGPA31	
CAN-AM	ASE 250	250	1986		AGPA31	
CAN-AM	DS 250	250	2008		AGPA173	
CAN-AM	MX LC 250	250	1986		AGPA31	
CAN-AM	ASE 350	350	1986		AGPA31	
CAN-AM	ASE 406	399	1987		AGPA31	
CAN-AM	400 OUTLANDER EFI LEFT/REAR	400	2009		AGPA113	AGPA115
CAN-AM	400 OUTLANDER EFI RIGHT	400	2009		AGPA115	
CAN-AM	400 OUTLANDER MAX STD LEFT/ REAR	400	2007		AGPA113	AGPA115
CAN-AM	400 OUTLANDER MAX STD RIGHT	400	2007		AGPA115	
CAN-AM	400 OUTLANDER MAX XT LEFT/ REAR	400	2007		AGPA113	AGPA115
CAN-AM	400 OUTLANDER MAX XT RIGHT	400	2007		AGPA115	
CAN-AM	400 OUTLANDER STD LEFT/REAR	400	2007		AGPA113	AGPA115
CAN-AM	400 OUTLANDER STD RIGHT	400	2007		AGPA115	
CAN-AM	400 OUTLANDER XT LEFT/REAR	400	2007		AGPA113	AGPA115
CAN-AM	400 OUTLANDER XT RIGHT	400	2007		AGPA115	
CAN-AM	500 OUTLANDER MAX STD LEFT/ REAR	500	2007	2012	AGPA113	AGPA115
CAN-AM	500 OUTLANDER MAX STD RIGHT	500	2007	2012	AGPA115	
CAN-AM	500 OUTLANDER MAX XT LEFT/ REAR	500	2007	2012	AGPA113	AGPA115
CAN-AM	500 OUTLANDER MAX XT RIGHT	500	2007	2012	AGPA115	
CAN-AM	500 OUTLANDER STD LEFT/REAR	500	2007	2012	AGPA113	AGPA115
CAN-AM	500 OUTLANDER STD RIGHT	500	2007	2012	AGPA115	
CAN-AM	500 OUTLANDER XT LEFT/REAR	500	2007	2012	AGPA113	AGPA115
CAN-AM	500 OUTLANDER XT RIGHT	500	2007	2012	AGPA115	
CAN-AM	500 RENEGADE LEFT/REAR	500	2008	2011	AGPA113	AGPA115
CAN-AM	500 RENEGADE RIGHT	500	2008	2011	AGPA115	
CAN-AM	ASE 500	500	1986		AGPA31	
CAN-AM	MX 500	500	1986		AGPA31	
CAN-AM	ASE 560	562	1986		AGPA31	
CAN-AM	SONIC 560	562	1986		AGPA31	
CAN-AM	SONIC 560	562	1986		AGPA31	

ACCOSSATO

PASTIGLIE BRAKE PADS

INDICE ANALITICO PASTIGLIE / pads alphabetical index

MARCA Brand	MODELLO Model	CC	DA From	A To	ANT. Front	POST. Rear
CAN-AM	650 OUTLANDER MAX STD LEFT/ REAR	650	2007	2012	AGPA113	AGPA115
CAN-AM	650 OUTLANDER MAX STD RIGHT	650	2007	2012	AGPA115	
CAN-AM	650 OUTLANDER MAX XT LEFT/ REAR	650	2007	2012	AGPA113	AGPA115
CAN-AM	650 OUTLANDER MAX XT RIGHT	650	2007	2012	AGPA115	
CAN-AM	650 OUTLANDER STD LEFT/REAR	650	2007	2012	AGPA113	AGPA115
CAN-AM	650 OUTLANDER STD RIGHT	650	2007	2012	AGPA115	
CAN-AM	650 OUTLANDER XT LEFT/REAR	650	2007	2012	AGPA113	AGPA115
CAN-AM	650 OUTLANDER XT RIGHT	650	2007	2012	AGPA115	
CAN-AM	800 COMMANDER LEFT/REAR	800	2011		AGPA77	AGPA76
CAN-AM	800 COMMANDER RIGHT	800	2011		AGPA76	
CAN-AM	800 OUTLANDER MAX LTD LEFT/ REAR	800	2007	2011	AGPA113	AGPA115
CAN-AM	800 OUTLANDER MAX LTD RIGHT	800	2007	2011	AGPA115	
CAN-AM	800 OUTLANDER MAX STD LEFT/ REAR	800	2007	2011		AGPA115
CAN-AM	800 OUTLANDER MAX STD RIGHT	800	2007	2011	AGPA115	
CAN-AM	800 OUTLANDER MAX XT LEFT/REAR	800	2007	2011	AGPA113	AGPA115
CAN-AM	800 OUTLANDER MAX XT RIGHT	800	2007	2011	AGPA115	
CAN-AM	800 OUTLANDER STD LEFT/REAR	800	2007	2011	AGPA113	AGPA115
CAN-AM	800 OUTLANDER STD RIGHT	800	2007	2011	AGPA115	
CAN-AM	800 OUTLANDER XT LEFT/REAR	800	2007	2011	AGPA113	AGPA115
CAN-AM	800 OUTLANDER XT RIGHT	800	2007	2011	AGPA115	
CAN-AM	800 RENEGADE EFI LEFT/REAR	800	2007	2011	AGPA113	AGPA115
CAN-AM	800 RENEGADE EFI RIGHT	800	2007	2011	AGPA115	
CAN-AM	800 RENEGADE LEFT/REAR	800	2008	2011	AGPA113	AGPA115
CAN-AM	800 RENEGADE RIGHT	800	2008	2011	AGPA115	
CAN-AM	800 RENEGADE X LEFT/REAR	800	2008	2011	AGPA113	AGPA115
CAN-AM	800 RENEGADE X RIGHT	800	2008	2011	AGPA115	
CAN-AM	Spyder RS SES 990cc	990	2008	2009		AGPP234
CAN-AM	Spyder RS SMS 990cc	990	2008	2009		AGPP234
CAN-AM	Spyder SE5 GS990 (3 wheeler)	990	2008	2011		AGPP234
CAN-AM	Spyder SM5 GS990 (3 wheeler)	990	2008	2011		AGPP234
CAN-AM	1000 COMMANDER LEFT/REAR	1000	2011		AGPA77	AGPA76
CAN-AM	1000 COMMANDER MAX LEFT	1000	2014		AGPA77	AGPA113
CAN-AM	1000 COMMANDER MAX RIGHT	1000	2014		AGPA76	AGPA115
CAN-AM	1000 COMMANDER RIGHT	1000	2011		AGPA76	
CAN-AM	1000 MAVERICK LEFT	1000	2013		AGPA77	AGPA113
CAN-AM	1000 MAVERICK RIGHT	1000	2013		AGPA76	AGPA115
CAN-AM	Spyder RS		2010	2012		AGPP234
CAN-AM	Spyder RS Phantom Black		2009			AGPP234
CAN-AM	Spyder RT		2010	2012		AGPP234
CAN-AM	Spyder RT LTD		2011	2012		AGPP234
CAN-AM	Spyder RT-S		2010	2012		AGPP234
CAN-AM	Spyder RT-S		2010	2012		AGPP234
CANNONDALE						
CANNONDALE	MX 400	400	2000		AGPA51	AGPP99
CANNONDALE	C 440 R	432	2003		AGPA51	
CANNONDALE	E 440 A / R	432	2003		AGPA51	
CANNONDALE	X 440	432	2003		AGPA51	
CANNONDALE	440 BLAZE LEFT/REAR	440	2003		AGPA113	AGPA113
CANNONDALE	440 BLAZE RIGHT	440	2003		AGPA115	
CANNONDALE	440 CANNIBAL LEFT/REAR	440	2003		AGPA113	AGPA113
CANNONDALE	440 CANNIBAL RIGHT	440	2003		AGPA115	
CANNONDALE	440 GLAMIS LEFT/REAR	440	2003		AGPA113	AGPA113
CANNONDALE	440 GLAMIS RIGHT	440	2003		AGPA115	
CANNONDALE	440 MOTO LEFT/REAR	440	2003		AGPA113	AGPA113
CANNONDALE	440 MOTO RIGHT	440	2003		AGPA115	
CANNONDALE	440 SPEED LEFT/REAR	440	2003		AGPA113	AGPA113
CANNONDALE	440 SPEED RIGHT	440	2003		AGPA115	
CANNONDALE	C 440 R	440	2003			AGPP99
CANNONDALE	E 440R/A	440	2003			AGPP99
CANNONDALE	S 440	440	2003		AGPA32	AGPP99
CANNONDALE	X 440	440	2003			AGPP99
CCM						
CCM	450 MX	450	2008		AGPA29	AGPP106
CCM	604 600 RS	600	2001			AGPP91
CCM	604E 600 SPORT	600	1999	2001		AGPP91
CCM	604E 600 SUPERMOTO	600	1999	2001		AGPP91
CCM	C25 600	600	1996	1998		AGPP91
CCM	604 DS SUPERMOTO	604	1999	2001	AGPA29	

PASTIGLIE BRAKE PADS

INDICE ANALITICO PASTIGLIE / pads alphabetical index

MARCA Brand	MODELLO Model	CC	DA From	A To	ANT. Front	POST. Rear
CCM	604 RS ROADSTER	604	2001		AGPA29	
CCM	644 DS	644	2002			AGPP91
CCM	644 DS SUPERMOTO	644	2002		AGPA29	
CCM	644 R30	644	2002			AGPP91
CCM	644 RC 30	644	2002		AGPA29	
CECTEK						
CECTEK	500 EFI GLADIATOR	500	2009		AGPA173	AGPA82
CECTEK	500 EFI KING COBRA	500	2009			AGPA82
CECTEK	500 EFI QUADRIFT	500	2009			AGPA82
CECTEK	500 I ESTOC	500	2010			AGPA82
CF MOTO						
CF MOTO	650 NK	650	2014		AGPA92	AGPP91
CF MOTO	650 TK	650	2014		AGPA92	AGPP91
CPI						
CPI	50 Aragon GP	50	2006		AGPA222	
CPI	50 Freaky	50	2007		AGPA222	
CPI	50 GTR	50	2002		AGPA20	
CPI	50 GTR	50	2003		AGPA42	
CPI	50 GTS	50	2002		AGPA20	AGPA19
CPI	50 Hussar	50	2003		AGPA222	
CPI	50 Oliver	50	2003		AGPA222	
CPI	50 Popcorn	50	2003		AGPA222	
CPI	125 Aragon GP	125	2007		AGPA222	
CPI	125 GTR	125	2002		AGPA20	
CPI	125 GTS	125	2002		AGPA20	
CPI	125 SAHEL	125	2002		AGPA51	AGPP90
CPI	125 X-LARGE	125	2002		AGPA42	AGPA42
CPI	SUPERMOTO 125	125	2007		AGPA18	
CPI	200 GTR	200	2002		AGPA20	
CPI	200 GTS	200	2002		AGPA20	
CPI	200 X-LARGE	200	2002		AGPA42	AGPA42
CPI	250 XS ATV	250	2007		AGPA173	
CPI	XS 250 QUAD	250	2006		AGPA82	
CZ						
CZ	CZ 180	180	1993		AGPA141	
DAELIM						
DAELIM	50 A FOUR	50	2006		AGPA80	
DAELIM	100 ALTINO	100	1999		AGPA88	
DAELIM	110 CITY ACE	110	2003		AGPA79	
DAELIM	125 DELFINO	125	2008		AGPA80	
DAELIM	125 ROADWIN	125	2004			AGPA23
DAELIM	125 S2	125	2006		AGPA72	
DAELIM	NF 125	125	2003		AGPA88	
DAELIM	OTELLO 125	125	2008		AGPA21	
DAELIM	S2 125 FI	125	2007		AGPA21	
DAELIM	SL 125 U3 FI	125	2007		AGPA21	
DAELIM	SV 125 S3	125	2011		AGPA21	AGPA23
DAELIM	VS 125 , EVOLUTION	125	1995		AGPA88	
DAELIM	250 ROADWIN	250	2008			AGPA23
DAELIM	250 S2	250	2006		AGPA72	
DAELIM	ST 250 SECTOR QUAD	250	2005	2006	AGPA82	AGPP57
DB MOTORS						
DB MOTORS	50 SPORT	50	2000		AGPA194	AGPA194
DB MOTORS	ZZ 50 PIRAT	50	2000		AGPA194	AGPA194
DB MOTORS	ZZ PIRAT 50	50	2000		AGPA31	AGPA31
DB MOTORS	ZZ SPORT 50	50	2000		AGPA31	
DERBI						
DERBI	50 DRD PRO CORSE	50	2006		AGPA142	
DERBI	50 DRD PRO CORSE	50	2006		AGPA175	
DERBI	50 SENDA DRD PRO SM	50	2005		AGPA42	
DERBI	50 SENDA R DRD	50	2003		AGPA70	
DERBI	BLACK DEVIL 50	50	2004		AGPA20	
DERBI	BOULEVARD 50	50	2009		AGPA20	
DERBI	DRD RACING 50 R	50	2005		AGPA20	
DERBI	DRD RACING 50 R LTD.	50	2005		AGPA20	
DERBI	DRD RACING 50 SM	50	2005		AGPA20	
DERBI	DRD RACING 50 SM LTD.	50	2005		AGPA20	
DERBI	DS 50	50	1988		AGPA18	
DERBI	EASY 50	50	1996		AGPA31	
DERBI	FDX 50	50	1989		AGPA18	
DERBI	GP1 50	50	2005		AGPA42	AGPA18
DERBI	GPR 50 NUDE	50	2004		AGPA42	AGPA18
DERBI	GPR 50 R	50	1998		AGPA70	
DERBI	GPR 50 RACING	50	2004		AGPA42	AGPA18
DERBI	GPX1 50	50	2006		AGPA142	
DERBI	GPX1 50	50	2006		AGPA175	
DERBI	SENDA 50 SM DRD BLACK EDITION	50	2003		AGPA20	
DERBI	SENDA DRD PRO SM 50	50	2005			AGPA49
DERBI	VAMOS 50 R	50	1995		AGPA13	
DERBI	GPR 75	75	1989			AGPA18
DERBI	GPR 75 SPORT	75				AGPA18
DERBI	SPORT 75, COPPA 75	75	1984		AGPA18	
DERBI	GPR 80 CUP	80	2004		AGPA142	AGPA18
DERBI	GPR 80 CUP	80	2004		AGPA175	
DERBI	125 ATMOSPHERE	125	1999		AGPA70	
DERBI	125 MULHACÉN	125	2007			AGPA194
DERBI	125 Mulhacen	125	2008		AGPA221	
DERBI	125 RAMBLA	125	2008			AGPP31
DERBI	125 SENDA DRD SM	125	2010		AGPA42	
DERBI	125 Senda DRD SM	125	2010		AGPA221	
DERBI	125 SENDA R 4T	125	2004			AGPA18
DERBI	125 SENDA X-TREME SM 4T	125	2004			AGPA18
DERBI	125 TERRA	125	2007			AGPA194
DERBI	125 Terra	125	2008		AGPA221	
DERBI	125 Terra Adventure	125	2008		AGPA221	
DERBI	BOULEVARD 125	125	2003		AGPA49	
DERBI	GP1 125	125	2005		AGPA42	AGPA18
DERBI	GPR 125	125	2005		AGPA142	AGPA18
DERBI	GPR 125	125	2005		AGPA175	
DERBI	GPR 125 NUDE	125	2005		AGPA142	AGPA18
DERBI	GPR 125 NUDE	125	2005		AGPA175	
DERBI	GPR 125 RACING	125	2009		AGPA142	AGPA18

ACCOSSATO

PASTIGLIE BRAKE PADS

INDICE ANALITICO PASTIGLIE / pads alphabetical index

MARCA Brand	MODELLO Model	CC	DA From	A To	ANT. Front	POST. Rear
DERBI	GPR 125 RACING	125	2009		AGPA175	
DERBI	MULHAACEN 125	125	2008		AGPA212	
DERBI	MULHACEN 125	125	2007			AGPA31
DERBI	SENDA BAJA	125	2006		AGPA20	AGPA49
DERBI	TERRA 125	125	2008		AGPA212	
DERBI	TERRA 125	125	2007		AGPA18	AGPA31
DERBI	TERRA ADVENTURE 125	125	2008		AGPA212	
DERBI	BOULEVARD 150	150	2003		AGPA49	
DERBI	180 PREDATOR	180	1999		AGPA70	
DERBI	DXR 200 QUAD (FRONT DISC)	200	2004		AGPA82	AGPA98
DERBI	DXR 200 QUAD (FRONT DRUM)	200	2004			AGPA76
DERBI	DXR 200 QUAD (FRONT DRUM)	200	2004			AGPA98
DERBI	250 RC	250	1985		AGPA194	
DERBI	DXR 250 QUAD (FRONT DISC)	250	2004		AGPA82	AGPA98
DERBI	DXR 250 QUAD (FRONT DRUM)	250	2004			AGPA76
DERBI	DXR 250 QUAD (FRONT DRUM)	250	2004			AGPA98
DERBI	GP1 250	250	2005		AGPA42	
DERBI	RC 250	250	1985		AGPA31	
DERBI	300 RAMBLA	300	2008			AGPP31
DERBI	659 MULHACEN	659	2005	2007	AGPA112	AGPA42
DERBI	659 MULHACEN CAFE	659	2008		AGPA112	AGPA42
DERBI	MULHACEN 659	2005			AGPA37	
DERBI	FD YUMBO		1984		AGPA18	
DERBI	FD YUMBO EXTRA		1987		AGPA18	
DERBI	FDS		1987		AGPA18	
DERBI	FDT		1987		AGPA18	
DERBI	FDT COPPA		1985		AGPA18	
	DUCATI					
DUCATI	796 MONSTER (RAD. CAL)	96	2011	2014		AGPA42
DUCATI	250 DESMO	250		1977	AGPA141	
DUCATI	350	350	1975		AGPA31	
DUCATI	350	350	1975		AGPA194	
DUCATI	350 DESMO	350		1977	AGPA141	
DUCATI	350 F3	350			AGPA141	AGPA141
DUCATI	350 F3	350	1986		AGPA194	AGPA194
DUCATI	350 GTV	350	1977		AGPA194	AGPA194
DUCATI	350 INDIANA	350	1986			AGPA194
DUCATI	350 PASO	350	1986		AGPA194	AGPA194
DUCATI	350 SPORT	350	1977		AGPA194	AGPA194
DUCATI	F3 350	350	1986		AGPA31	AGPA31
DUCATI	GTV 350	350	1977		AGPA31	AGPA31
DUCATI	INDIANA 350	350	1986			AGPA31
DUCATI	PASO 350	350	1986		AGPA31	AGPA31
DUCATI	SPORT 350	350	1977		AGPA31	AGPA31
DUCATI	400 SS JUNIOR	400	1992			AGPA194
DUCATI	400 SS NUDA	400	1992		AGPA32	AGPA194
DUCATI	400 SS, JUNIOR	400	1992		AGPA32	AGPA31
DUCATI	SS, NUDA 400	400	1992			AGPA31
DUCATI	400 MONSTER (JAPAN)	400	2001		AGPA96	AGPA194
DUCATI	MONSTER 400 (JAPAN)	400	2001			AGPA31
DUCATI	500 TWIN GTL	500	1975		AGPA194	

MARCA Brand	MODELLO Model	CC	DA From	A To	ANT. Front	POST. Rear
DUCATI	TWIN GTL 500	500	1975		AGPA31	
DUCATI	500 GTV	500	1977		AGPA194	AGPA194
DUCATI	500 SPORT	500	1977		AGPA141	AGPA141
DUCATI	500 SPORT DESMO	500	1977		AGPA194	
DUCATI	GTV 500	500	1977		AGPA31	AGPA31
DUCATI	SPORT DESMO 500	500	1977		AGPA31	
DUCATI	500 PANTAH	500	1985			AGPA194
DUCATI	PANTAH 500	500	1985		AGPA31	AGPA31
DUCATI	502 SINGLE	502	1993			AGPA194
DUCATI	502 SUPERMONO	502	1993			AGPA194
DUCATI	502 SINGLE	550	1993		AGPA32	
DUCATI	502 SUPERMONO	550	1993		AGPA32	AGPA31
DUCATI	600 MONSTER	600	2000	2001	AGPA96	
DUCATI	600 MONSTER	600	1994	2001		AGPA194
DUCATI	600 PANTAH TL / SL	600	1981			AGPA194
DUCATI	600 PANTAH TL, SL	600			AGPA141	AGPA141
DUCATI	600 SL, TL PANTAH	600	1976		AGPA141	
DUCATI	600 SS SUPERSPORT	600	1995		AGPA32	
DUCATI	600 SUPERSPORT	600	1994	1995		AGPA194
DUCATI	M 600 MONSTER	600	1994	1999	AGPA32	
DUCATI	M MONSTER 600	600	1994	1999		AGPA31
DUCATI	MONSTER 600	600	2000	2001		AGPA31
DUCATI	SL, TL PANTAH 600	600	1976			AGPA31
DUCATI	SS SUPERSPORT 600	600	1995			AGPA31
DUCATI	620 MONSTER	620	2005	2006	AGPA29	AGPA194
DUCATI	620 MONSTER DARK	620	2006		AGPA29	AGPA194
DUCATI	620 MONSTER DARK I.E	620	2002	2005		AGPA194
DUCATI	620 MONSTER DARK I.E.	620	2002	2006	AGPA96	
DUCATI	620 MONSTER I.E	620	2002	2005		AGPA194
DUCATI	620 MONSTER I.E., S I.E.	620	2002	2006	AGPA96	
DUCATI	620 MONSTER SI.E	620	2002	2005		AGPA194
DUCATI	620 MULTISTRADA	620	2005		AGPA29	AGPA42
DUCATI	620 MULTISTRADA DARK	620	2005		AGPA96	AGPA42
DUCATI	620 SPORT	620	2003		AGPA96	AGPA42
DUCATI	MONSTER 620 DARK I.E.	620	2002	2006		AGPA31
DUCATI	MONSTER 620 I.E., S I.E.	620	2002	2006		AGPA31
DUCATI	650 INDIANA	650	1986			AGPA194
DUCATI	650 PANTAH	650	1984		AGPA141	AGPA141
DUCATI	INDIANA 650	650	1986			AGPA31
DUCATI	695 MONSTER	695	2006		AGPA29	AGPA194
DUCATI	MONSTER 695	695	2007			AGPA31
DUCATI	696 MONSTER (RAD. CAL)	696	2008	2012	AGPA96	AGPA42

PASTIGLIE BRAKE PADS

INDICE ANALITICO PASTIGLIE / pads alphabetical index

MARCA Brand	MODELLO Model	CC	DA From	A To	ANT. Front	POST. Rear
DUCATI	748 / S	748	1999	2002	AGPA96	
DUCATI	748 / S	748	1999	2003		AGPA194
DUCATI	748 / S	748	1999	2003		AGPA194
DUCATI	748 BIPOSTO	748	1995	1998	AGPA32	
DUCATI	748 BIPOSTO / SP / STRADA	748	1995	1999		AGPA194
DUCATI	748 BIPOSTO / SP / STRADA	748	1995	1999		AGPA194
DUCATI	748 R	748	2000		AGPA96	
DUCATI	748 R	748	2000	2002		AGPA31
DUCATI	748 R	748	2001	2002	AGPA112	
DUCATI	748 R	748	2000	2003		AGPA194
DUCATI	748 R	748	2000	2003		AGPA194
DUCATI	748 S	748	1999	2002		AGPA31
DUCATI	748 SP	748	1995	1997	AGPA32	AGPA31
DUCATI	748 SPS	748	1998	1999		AGPA194
DUCATI	748 SPS	748	1998	1999	AGPA96	AGPA31
DUCATI	749 R (RAD. CAL)	748	2004			AGPA42
DUCATI	749 S	748	2003			AGPA42
DUCATI	BIPOSTO 748	748	1995	1998		AGPA31
DUCATI	749 , S	749	2003		AGPA112	
DUCATI	749 R (RAD.CAL)	749	2004		AGPA112	
DUCATI	750 CARENARA / NUDA	750	1992			AGPA194
DUCATI	750 F1	750	1986		AGPA141	AGPA141
DUCATI	750 GT	750	1974	1976	AGPA141	
DUCATI	750 INDIANA	750	1987	1990		AGPA194
DUCATI	750 MONSTER	750	1996	1999	AGPA32	AGPA194
DUCATI	750 MONSTER	750	2000	2001	AGPA96	
DUCATI	750 MONSTER / MONSTER I.E	750	2000	2002		AGPA194
DUCATI	750 MONSTER I.E.	750	2002		AGPA96	
DUCATI	750 PASO	750	1987		AGPA141	AGPA194
DUCATI	750 PASO	750	1986		AGPA194	AGPA194
DUCATI	750 PASO	750	1988		AGPA194	AGPA194
DUCATI	750 SPORT	750	2000			AGPA42
DUCATI	750 SPORT	750	1990		AGPA141	AGPA141
DUCATI	750 SPORT 00- HS	750	2000		AGPA96	
DUCATI	750 SS	750	1974	1976	AGPA141	AGPA141
DUCATI	750 SS	750				AGPA31
DUCATI	750 SS	750	1991		AGPA32	AGPA141
DUCATI	750 SS SUPERSPORT	750	1995	1999	AGPA32	
DUCATI	750 SS, CARENARA	750	1992		AGPA32	AGPA31
DUCATI	750 SS, NUDA	750	1992		AGPA32	AGPA31
DUCATI	750 SUPER SPORT	750	2000		AGPA96	AGPA42
DUCATI	750 SUPER SPORT	750	1992	1994	AGPA32	
DUCATI	750 SUPERSPORT	750	1995	1999		AGPA194
DUCATI	INDIANA 750	750				AGPA31
DUCATI	MONSTER 750	750	1996	2001		AGPA31
DUCATI	MONSTER 750 I.E.	750	2002			AGPA31
DUCATI	PASO 750	750	1986		AGPA31	AGPA31
DUCATI	PASO 750	750	1987			AGPA31
DUCATI	PASO 750	750	1988		AGPA31	AGPA31
DUCATI	SUPER SPORT 750	750	1992	1994		AGPA31
DUCATI	795 MONSTER	795	2012		AGPA96	AGPA42
DUCATI	796 HYPERMOTARD	796	2010	2012	AGPA96	
DUCATI	796 MONSTER (RAD.CAL)	796	2011	2014	AGPA96	
DUCATI	796 HYPERMOTARD	800	2010	2012		AGPA42
DUCATI	800 HYPERMOTARD	800	2013		AGPA177	AGPA42
DUCATI	800 HYPERMOTARD SP	800	2013		AGPA177	
DUCATI	800 HYPERSTRADA	800	2013		AGPA177	AGPA42
DUCATI	800 MONSTER DARK I.E., S I.E.	800	2003	2007	AGPA96	
DUCATI	800 MONSTER I.E / SI.E	800	2003	2005		AGPA194
DUCATI	800 MONSTER I.E., S I.E.	800	2003	2007	AGPA96	
DUCATI	800 MONSTER S2R	800	2005	2007	AGPA29	AGPA194
DUCATI	800 MONSTER S2R DARK	800	2005	2006	AGPA29	AGPA194
DUCATI	800 SCRAMBLER CLASSIC	800	2015		AGPA177	AGPP91
DUCATI	800 SCRAMBLER ENDURO	800	2015		AGPA177	AGPP91
DUCATI	800 SCRAMBLER FULL THROTTLE	800	2015		AGPA177	AGPP91
DUCATI	800 SCRAMBLER ICON	800	2015		AGPA177	AGPP91
DUCATI	800 SPORT	800	2003		AGPA96	AGPA42
DUCATI	800 SUPERSPORT	800	2003		AGPA96	AGPA42
DUCATI	MONSTER 800 DARK I.E., S I.E.	800	2003	2007		AGPA31
DUCATI	MONSTER 800 I.E., S I.E.	800	2003	2007		AGPA31
DUCATI	MONSTER 800 S2R	800	2005	2007		AGPA31
DUCATI	821 MONSTER	821	2015		AGPA177	AGPA42
DUCATI	821 MONSTER DARK	821	2015		AGPA177	AGPA42
DUCATI	848 (RAD. CAL)	848	2008	2010	AGPA96	AGPA42
DUCATI	848 EVO (RAD. CAL)	848	2011		AGPA106	AGPA42
DUCATI	848 STREETFIGHTER	848	2012		AGPA96	AGPA42
DUCATI	848 STREETFIGHTER S	848	2012		AGPA106	AGPA42
DUCATI	851 STRADA	851	1989		AGPA32	AGPA194
DUCATI	851 STRADA	851	1991		AGPA32	AGPA141
DUCATI	851 SUPERBIKE	851	1990		AGPA32	AGPA194
DUCATI	STRADA 851	851	1989			AGPA31
DUCATI	SUPERBIKE 851	851	1990			AGPA31
DUCATI	860 GT	860	1975	1977	AGPA141	
DUCATI	860 GT	860			AGPA141	AGPA141
DUCATI	888 ROCHE REPLICA	888	1991		AGPA32	AGPA141
DUCATI	888 SP4	888	1992		AGPA32	AGPA194
DUCATI	888 SPS	888	1992		AGPA32	AGPA194
DUCATI	888 SPV	888	1992	1994		AGPA194
DUCATI	SP4 888	888	1992			AGPA31
DUCATI	SPS 888	888	1992			AGPA31

ACCOSSATO

PASTIGLIE BRAKE PADS

INDICE ANALITICO PASTIGLIE / pads alphabetical index

MARCA Brand	MODELLO Model	CC	DA From	A To	ANT. Front	POST. Rear
DUCATI	888 SP V	888	1993		AGPA32	
DUCATI	888 SPO	888	1993			AGPA194
DUCATI	888 STRADA	888	1993		AGPA32	AGPA31
DUCATI	888 STRADA / SUPERBIKE	888	1993			AGPA194
DUCATI	888 SUPERBIKE	888	1993		AGPA32	AGPA31
DUCATI	SP V 888	888	1993			AGPA31
DUCATI	888 SPO	888			AGPA32	
DUCATI	SPO HF 888	888				AGPA31
DUCATI	899 PANIGALE	898	2014			AGPA42
DUCATI	899 PANIGALE	899	2014		AGPA177	
DUCATI	900 GTS	900	1977		AGPA141	
DUCATI	900 SPORT	900	1977		AGPA141	AGPA141
DUCATI	900 SS	900	1978	1989	AGPA141	AGPA141
DUCATI	900 MIKE HAILWOOD REPLICA	900	1985		AGPA141	AGPA141
DUCATI	900 S2 DESMO	900	1985		AGPA141	AGPA141
DUCATI	906 900 PASO	900	1989		AGPA141	AGPA194
DUCATI	900 SS	900	1990	1994	AGPA32	AGPA31
DUCATI	900 SL	900	1992		AGPA32	AGPA31
DUCATI	900 SSR	900	1992		AGPA32	AGPA31
DUCATI	900 SUPERLIGHT	900	1992	1995		AGPA194
DUCATI	907 900 I. E.	900	1992			AGPA194
DUCATI	900 M, IL MONSTER	900	1993	1999	AGPA32	AGPA31
DUCATI	900 MONSTER IL	900	1993			AGPA194
DUCATI	M 900 STREET MONSTER	900	1994	1999	AGPA32	AGPA31
DUCATI	900 SS SUPERSPORT	900	1995	1997	AGPA32	AGPA31
DUCATI	900 SUPERSPORT	900	1995	1997		AGPA194
DUCATI	900 FE	900	1997		AGPA32	
DUCATI	FE 900	900	1997			AGPA31
DUCATI	900 SUPER SPORT	900	1998		AGPA96	AGPA42
DUCATI	900 SSR	900	1999			AGPA194
DUCATI	900 MH	900	2000		AGPA96	AGPA31
DUCATI	900 MONSTER	900	2000	2001	AGPA96	AGPA31
DUCATI	900 MONSTER I.E. 02 HS	900	2002		AGPA96	AGPA31
DUCATI	906 PASO	904	1989			AGPA31
DUCATI	907 I. E.	904	1992		AGPA32	AGPA31
DUCATI	916 BIPOSTO	916	1994		AGPA32	AGPA31
DUCATI	916 BIPOSTO	916	1994	1997		AGPA194
DUCATI	916 BIPOSTO	916	1995	1997		AGPA194
DUCATI	916 MONSTER S4	916	2001	2003	AGPA96	AGPA194
DUCATI	916 SP / STRADA / SENNA	916	1994	1997		AGPA194
DUCATI	916 SPORT TOURING 4	916	1999	2001	AGPA96	AGPA42
DUCATI	916 SPS	916	1997	1998	AGPA96	AGPA31
DUCATI	916 SPS	916	1997	1998		AGPA194
DUCATI	MONSTER 916 S4	916	2001	2003		AGPA31
DUCATI	944 SPORT TOURING	944	1998		AGPA96	AGPA42
DUCATI	944 ST2	944	1997		AGPA96	AGPA42
DUCATI	D16RR 990 DESMOSEDICI RR	990	2007		AGPA106	AGPA42
DUCATI	992 ST3	992	2004		AGPA96	AGPA42
DUCATI	992 ST3S ABS	992	2006		AGPA96	AGPA42
DUCATI	996 SPS	996	1999	2001	AGPA96	AGPA31
DUCATI	996 SPS	996	1999	2001		AGPA194
DUCATI	996 R	996	2001		AGPA112	AGPA31
DUCATI	996 R	996	2001			AGPA194
DUCATI	996 ST4S	996	2002		AGPA96	AGPA42
DUCATI	996, S	996	2002			AGPA31
DUCATI	996 ST4S ABS	996	2003		AGPA96	AGPA42
DUCATI	996 MONSTER S4R	996	2004		AGPA96	AGPA194
DUCATI	MONSTER 996 S4R	996	2004			AGPA31
DUCATI	998 / S	998	2002		AGPA96	
DUCATI	998 / S	998	2002	2003		AGPA194
DUCATI	998 / S	998	2002	2003		AGPA194
DUCATI	998 MONSTER S4RS	998	2006		AGPA112	AGPA42
DUCATI	998 R	998	2002		AGPA112	AGPA194
DUCATI	998 R	999	2002			AGPA31
DUCATI	999 R (RAD. CAL)	999	2003		AGPA112	AGPA42
DUCATI	999 S	999	2003		AGPA112	AGPA42
DUCATI	999 MONSTER S4R	999	2007		AGPA112	AGPA42
DUCATI	999 MONSTER S4RS	999	2007		AGPA112	AGPA42
DUCATI	1000 MILLE REPLICA	1000	1984		AGPA141	AGPA141
DUCATI	1000 /6 MIKE HAILWOOD REPLICA	1000	1985		AGPA141	AGPA141
DUCATI	1000 S2 DESMO	1000	1985		AGPA141	AGPA141
DUCATI	1000 MONSTER DARK I.E / SI.E	1000	2003	2005		AGPA194
DUCATI	1000 MONSTER DARK I.E., S I.E.	1000	2003		AGPA96	
DUCATI	1000 MONSTER I.E / SI.E	1000	2003	2005		AGPA194
DUCATI	1000 MONSTER I.E., S I.E.	1000	2003		AGPA96	
DUCATI	1000 MULTISTRADA DS	1000	2003	2006	AGPA96	AGPA42
DUCATI	1000 SUPERSPORT DS	1000	2003			AGPA194
DUCATI	MONSTER 1000 DARK I-E- , S I.E.	1000	2003			AGPA31
DUCATI	MONSTER 1000 I.E., S I.E.	1000	2003			AGPA31
DUCATI	1000 GT	1000	2005		AGPA92	AGPP91
DUCATI	1000 MULTISTRADA S DS	1000	2005		AGPA96	AGPA42
DUCATI	1000 PAUL SMART	1000	2005		AGPA92	AGPP91
DUCATI	1000 SPORT	1000	2005		AGPA92	AGPP91
DUCATI	1000 HYPERMOTARD	1000	2006		AGPA112	AGPA42
DUCATI	1000 MONSTER S2R	1000	2006		AGPA96	AGPA42
DUCATI	1000 BIPOSTO	1000	2007		AGPA92	AGPP91
DUCATI	1000 MULTISTRADA	1000	2007		AGPA96	AGPA42

PASTIGLIE BRAKE PADS

INDICE ANALITICO PASTIGLIE / pads alphabetical index

MARCA Brand	MODELLO Model	CC	DA From	A To	ANT. Front	POST. Rear
DUCATI	1000 GT TOURING	1000	2009		AGPA92	AGPP91
DUCATI	1098 (RAD. CAL)	1098	2007	2008	AGPA106	
DUCATI	1098 R (RAD.CAL)	1098	2008		AGPA106	
DUCATI	1098 R BAYLISS LE (RAD.CAL)	1098	2009		AGPA106	
DUCATI	1098 S (RAD. CAL)	1098	2007	2008	AGPA106	
DUCATI	1098 STREETFIGHTER (RAD.CAL)	1098	2009		AGPA106	
DUCATI	1098 STREETFIGHTER S (RAD.CAL)	1098	2009		AGPA106	
DUCATI	1098 (RAD. CAL)	1098	2007	2008		AGPA42
DUCATI	1098 R (RAD. CAL)	1098	2008			AGPA42
DUCATI	1098 R BAYLISS LE (RAD. CAL)	1098	2009			AGPA42
DUCATI	1098 S (RAD. CAL)	1098	2007	2008		AGPA42
DUCATI	1098 STREETFIGHTER (RAD. CAL)	1098	2009			AGPA42
DUCATI	1098 STREETFIGHTER S (RAD. CAL)	1098	2009			AGPA42
DUCATI	1100 HYPERMOTARD	1100	2007		AGPA106	AGPA42
DUCATI	1100 HYPERMOTARD EVO	1100	2010		AGPA96	AGPA42
DUCATI	1100 HYPERMOTARD EVO SP	1100	2010		AGPA106	AGPA42
DUCATI	1100 MONSTER (RAD. CAL)	1100	2009		AGPA96	AGPA42
DUCATI	1100 MONSTER EVO (RAD. CAL)	1100	2011		AGPA96	AGPA42
DUCATI	1100 MONSTER S (RAD. CAL)	1100	2009		AGPA96	AGPA42
DUCATI	1100 MULTISTRADA	1100	2007	2009	AGPA96	AGPA42
DUCATI	1100 MULTISTRADA S	1100	2007	2009	AGPA96	AGPA42
DUCATI	1198 (RAD.CAL)	1198	2009		AGPA106	
DUCATI	1198 S (RAD.CAL)	1198	2009		AGPA106	
DUCATI	1198 SP (RAD. CAL)	1198	2011		AGPA106	
DUCATI	1199 PANIGALE	1199	2012	2014	AGPA106	
DUCATI	1199 PANIGALE R	1199	2013		AGPA106	
DUCATI	1199 PANIGALE S	1199	2012	2014	AGPA106	
DUCATI	1199 SUPERLEGGERA	1199	2014		AGPA106	
DUCATI	1198 (RAD. CAL)	1200	2009			AGPA42
DUCATI	1198 S (RAD. CAL)	1200	2009			AGPA42
DUCATI	1200 MULTISTRADA	1200	2010	2014	AGPA96	AGPA42
DUCATI	1200 MULTISTRADA S SPORT	1200	2010	2014	AGPA96	AGPA42
DUCATI	1200 MULTISTRADA S TOURING	1200	2010	2014	AGPA96	AGPA42
DUCATI	1198 SP (RAD. CAL)	1200	2011			AGPA42
DUCATI	1200 DIAVEL	1200	2011		AGPA106	AGPA92
DUCATI	1200 DIAVEL STRADA	1200	2011		AGPA106	AGPA92
DUCATI	1200 MULTISTRADA S PIKES PEAK	1200	2011	2014	AGPA96	AGPA42
DUCATI	1199 PANIGALE	1200	2012	2014		AGPA42
DUCATI	1199 PANIGALE S	1200	2012	2014		AGPA42
DUCATI	1199 PANIGALE R	1200	2013			AGPA42
DUCATI	1200 MULTISTRADA S GT	1200	2013	2014	AGPA96	AGPA42
DUCATI	1199 SUPERLEGGERA	1200	2014			AGPA42
DUCATI	1200 MONSTER	1200	2014		AGPA177	AGPA42
DUCATI	1200 MONSTER S	1200	2014		AGPA106	AGPA42
DUCATI	1200 MULTISTRADA	1200	2015		AGPA177	
DUCATI	1200 MULTISTRADA S	1200	2015		AGPA106	
DUCATI	1200 MULTISTRADA S D-AIR	1200	2015		AGPA106	
DUCATI	DIAVEL 1200	1200	2011			AGPA29
DUCATI	1299 PANIGALE	1299	2015		AGPA106	AGPA42
DUCATI	1299 PANIGALE S	1299	2015		AGPA106	AGPA42
DUCATI	SINGLE 502		1993			AGPA31
DUCATI	SUPERSPORT		1995	1999		AGPA31
EASY RIDER						
EASY RIDER	50 EASY RIDER	50	1999		AGPA83	
EBR						
EBR	1190 RS	1190	2012	2015	AGPA232	
EBR	1190 RX	1190	2014	2015	AGPA232	
EBR	1190 SX	1190	2014	2015	AGPA232	
E-TON						
E-TON	RXL 150 VIPER	150	2007			AGPP57
E-TON	VXL 250 VECTOR, ST VECTOR	250	2006		AGPA82	AGPP57
E-TON	VTX 300 VORTEX, ST VORTEX	300	2007		AGPA82	AGPP57
E-TON	VXL 300 VECTOR, ST VECTOR	300	2007		AGPA82	AGPP57
FACTORY						
FACTORY	50 HELIX	50	2004			AGPA82
FACTORY	50 REX	50	2004			AGPA82
FACTORY	R12 50 PHANTOM AGUA	50	2006		AGPA47	AGPA18
FACTORY	R14 50 PHANTOM AGUA	50	2004		AGPA47	AGPA18
FACTORY	R14 50 PHANTOM AIRE	50	2003		AGPA18	
FACTORY	RP 50 DESERT	50	2004		AGPA20	
FACTORY	SM 50 CHRONO	50	2004		AGPA20	
FACTORY	SP 50 CHRONO	50	2004		AGPA20	
FACTORY	YR 50 DESERT	50	2004		AGPA20	
FACTORY	R2 PHANTOM 65	65	2004			AGPA18
FACTORY	100 HELIX	100	2004			AGPA82
FACTORY	100 REX	100	2004			AGPA82
FACTORY	YR 125	125	2006		AGPA79	AGPA18
FACTORY	YR 250	250	1999		AGPA29	AGPP91

ACCOSSATO

PASTIGLIE BRAKE PADS

INDICE ANALITICO PASTIGLIE / pads alphabetical index

MARCA Brand	MODELLO Model	CC	DA From	A To	ANT. Front	POST. Rear
FACTORY	R2 65 PHANTOM		2004		AGPA47	
FANTIC						
FANTIC	50 .1 OASIS	50	1983		AGPA151	AGPA151
FANTIC	50 STRADA	50	1983		AGPA98	
FANTIC	50 .1 RAIDER	50	1987		AGPA98	
FANTIC	50 .1 RAIDER RALLY	50	1987		AGPA151	
FANTIC	50 KOALA	50	1988		AGPA194	AGPA194
FANTIC	KOALA 50	50	1988		AGPA31	AGPA31
FANTIC	50 KOALA	50	1990		AGPA151	AGPA151
FANTIC	50 OASIS	50	1990			AGPA151
FANTIC	RC 50 CABALLERO	50	1991		AGPA194	AGPA194
FANTIC	RC CABALLERO 50	50	1991		AGPA31	AGPA31
FANTIC	RS 50 CABALLERO	50	1991		AGPA194	AGPA194
FANTIC	50 BIG WHEEL	50	1993		AGPA84	
FANTIC	50 PONY SR	50	1993		AGPA84	
FANTIC	50 GRINTA	50	1995		AGPA84	
FANTIC	50 LEADER	50	1995		AGPA84	
FANTIC	50 QUEENIE	50	1995		AGPA84	
FANTIC	XM 50 CABALLERO	50	1998		AGPA194	AGPA194
FANTIC	50 REGOLARITÀ CASA	50	2008		AGPA20	
FANTIC	50 REGOLARITÀ COMPETIZIONE	50	2008		AGPA51	AGPP90
FANTIC	MX 50 REGOLARITÀ COMPETIZIONE	50	2008		AGPA51	AGPP90
FANTIC	SUPERSEI 50 MOTARD	50	2008		AGPA20	
FANTIC	50 CABALLERO MOTARD	50	2010			AGPP72
FANTIC	50 CABALLERO REGOLARITA	50	2010			AGPP72
FANTIC	TRIAL 50	50			AGPA16	
FANTIC	MX 65 REGOLARITÀ COMPETIZIONE	65	2008		AGPA51	AGPP90
FANTIC	75 OASIS	75	1989			AGPA151
FANTIC	80 REGOLARITÀ COMPETIZIONE	80	2008		AGPA51	AGPP90
FANTIC	MX 85 REGOLARITÀ COMPETIZIONE	85	2008		AGPA51	AGPP90
FANTIC	HP1 125 SPORT	125	1987		AGPA151	
FANTIC	125 CRUISER	125	1998		AGPA194	
FANTIC	125 REGOLARITÀ CASA	125	2008			AGPA82
FANTIC	125 REGOLARITÀ COMPETIZIONE	125	2008		AGPA51	AGPP90
FANTIC	125 SUPERSEI MOTARD	125	2008			AGPA82
FANTIC	125 CABALLERO MOTARD 2T	125	2010		AGPA51	AGPP72
FANTIC	125 CABALLERO MOTARD 4T	125	2010			AGPP72
FANTIC	125 CABALLERO REGOLARITA 4T	125	2010			AGPP72
FANTIC	125 CABALLERO ENDURO 2T	125	2012		AGPA51	AGPP72
FANTIC	TZ 125 SM	125	2012		AGPA32	
FANTIC	HP1 125 STRADA	125	1985		AGPA16	
FANTIC	TRIAL PROFESSIONAL 125	125	1987		AGPA16	AGPA16
FANTIC	125 RAIDER	125			AGPA151	
FANTIC	TRIAL 125	125			AGPA16	
FANTIC	200 CABALLERO MOTARD 4T	200	2010			AGPP72
FANTIC	200 CABALLERO REGOLARITA 4T	200	2010			AGPP72
FANTIC	TRIAL 200 PROGRESS 1	200	1987		AGPA16	
FANTIC	TRIAL 201	201			AGPA16	
FANTIC	TRIAL 201 PROGRESS 2	201	1987		AGPA16	
FANTIC	TRIAL 241 PROGRESS 2	241	1987		AGPA16	
FANTIC	TRIAL 243	243	1987		AGPA16	AGPA16
FANTIC	250 COACH	250	1991		AGPA194	
FANTIC	COACH 250	250	1991		AGPA31	
FANTIC	RAIDER 250	250	1985		AGPA28	
FANTIC	305	250	1989		AGPA18	AGPA18
FANTIC	307 TRIAL	250	1991		AGPA18	AGPA18
FANTIC	250 K-ROO	250	1993		AGPA18	AGPA18
FANTIC	TRIAL 301	301	1985		AGPA16	
FANTIC	TRIAL 301 PROGRESS 2	301	1987		AGPA16	
FANTIC	TRIAL 303 PROFESSIONAL	303	1987		AGPA16	AGPA16
FANTIC	TRIAL 343 PROGRESS 2	343	1987		AGPA16	AGPA16
GAC						
GAC	NEW T.T.	50	1987		AGPA18	
GARELLI						
GARELLI	50 TIGER XLE	50	1986		AGPA194	AGPA194
GARELLI	TIGER XLE 50	50	1986		AGPA31	AGPA31
GARELLI	URKA	50	1991		AGPA31	
GARELLI	URKA	50	1991		AGPA194	
GARELLI	SR 50 PONY	50	1995		AGPA84	
GARELLI	PMX 50 RALLY	50	2000		AGPA84	
GARELLI	PMX 50 SPORT	50	2000		AGPA102	
GARELLI	50 STARTER	50	2002		AGPA84	
GARELLI	CPR 50	50	2002		AGPA84	
GARELLI	FX 50	50	2002		AGPA84	
GARELLI	KRS 50	50	2002		AGPA102	
GARELLI	CICLONE LC, SM	50	1986		AGPA18	
GARELLI	50 SAHEL	50	1991			AGPA18
GARELLI	FLO' 50	50	2000		AGPA13	
GARELLI	50 Flexi	50	2012		AGPA222	
GARELLI	50 Xo	50	2012		AGPA222	
GARELLI	GSP 50	50	2012		AGPA222	
GARELLI	125 GTA	125	1983	1985	AGPA194	AGPA194
GARELLI	GTA 125	125	1983	1985	AGPA31	
GARELLI	XR TIGER XRD 125	125	1985		AGPA31	
GARELLI	125 TIGER XLE	125	1986			AGPA151
GARELLI	125 T-REX	125	2000		AGPA102	
GARELLI	125 FREELAND	125	2002		AGPA102	
GARELLI	125 JOKER 2	125	2002		AGPA79	
GARELLI	125 XO	125	2012			AGPA89
GARELLI	TIGER 125 XLE	125	1986		AGPA28	
GARELLI	PANTHER 125	125	2002			AGPA13

PASTIGLIE BRAKE PADS

ACCOSSATO

INDICE ANALITICO PASTIGLIE / pads alphabetical index

MARCA Brand	MODELLO Model	CC	DA From	A To	ANT. Front	POST. Rear
GARELLI	GTA 125	125			AGPA31	AGPA31
GARELLI	150 FREELAND	150	2002		AGPA102	
GARELLI	150 JOKER 2	150	2002		AGPA79	
GARELLI	150 XO	150	2012			AGPA89
GARELLI	PANTHER 150	150	2003			AGPA13
GARELLI	200 XO	200	2012			AGPA89
GARELLI	PANTHER 250	250	2002			AGPA13
GARELLI	323 TRIAL	323	1986		AGPA16	
GARELLI	CYCLONE LC		1986		AGPA194	
GARELLI	XO ELECTRIC		2012			AGPA89
GAS GAS						
GAS GAS	EC 50 BOY	50	2001		AGPA44	AGPA44
GAS GAS	EC 50 ROOKIE	50	2001	2004	AGPA70	
GAS GAS	SM 50 ROOKIE	50	2001		AGPA70	
GAS GAS	TXT 50 BOY	50	2001		AGPA44	AGPA44
GAS GAS	TXT 50 ROOKIE	50	2002	2003	AGPA44	AGPA44
GAS GAS	EC 50 ROOKIE	50	2005		AGPA20	
GAS GAS	50 WILD HP	50	2004		AGPA29	AGPA29
GAS GAS	TXT 50 BOY	50	2004		AGPA18	AGPA18
GAS GAS	MC 65	65	2005		AGPA44	AGPA44
GAS GAS	TXT 80 ROOKIE	80	2002	2003	AGPA44	AGPA44
GAS GAS	ENDUCROSS 125	125	1993		AGPA51	
GAS GAS	EC 125	125	1997	1999		AGPP91
GAS GAS	EC 125	125	2000		AGPA51	AGPP90
GAS GAS	SM 125	125	2002		AGPA32	AGPP90
GAS GAS	MC 125	125	2003		AGPA51	AGPP90
GAS GAS	PAMPERA 125	125	2004			AGPA44
GAS GAS	TXT 125	125	2004			AGPA47
GAS GAS	TX 125 RANDONE	125	2012		AGPA45	AGPA47
GAS GAS	DELTA 125	125	1991		AGPA18	
GAS GAS	TRIAL 125	125	1991		AGPA18	
GAS GAS	125 ENDUCROSS	125	1993	1996	AGPA29	
GAS GAS	PAMPERA 125	125	1996		AGPA18	AGPA18
GAS GAS	EC 125	125	1997	1999	AGPA29	
GAS GAS	EC 200	200	1999			AGPP91
GAS GAS	EC 200	200	2000		AGPA51	AGPP90
GAS GAS	TXT 200	200	2004			AGPA47
GAS GAS	EC 200 HOBBY	200	2007		AGPA51	AGPP90
GAS GAS	TX 200	200	1997		AGPA18	AGPA18
GAS GAS	EC 200	200	1999		AGPA29	
GAS GAS	PAMPERA 200	200	1999		AGPA18	AGPA18
GAS GAS	200 WILD HP	200	2008		AGPA29	AGPA29
GAS GAS	240 WILD HP	240	2004		AGPA29	AGPA29
GAS GAS	EC 250	250	1997	1999		AGPP91
GAS GAS	MC 250	250	1997	1999		AGPP91
GAS GAS	EC 250	250	2000	2011		AGPP90
GAS GAS	EC 250	250	2000	2012	AGPA51	
GAS GAS	MC 250	250	2000		AGPA51	AGPP90
GAS GAS	EC 250 FSE	250	2002		AGPA51	AGPP90
GAS GAS	PAMPERA 250	250	2002			AGPA44
GAS GAS	SM 250	250	2002		AGPA32	AGPP90
GAS GAS	TXT 250	250	2004		AGPA45	AGPA47
GAS GAS	EC 250	250	2012			AGPP106
GAS GAS	TRIAL 250	250	1989		AGPA18	AGPA18
GAS GAS	PAMPERA 250	250	1996	1999	AGPA18	AGPA18
GAS GAS	EC 250	250	1997	1999	AGPA29	
GAS GAS	MC 250	250	1997	1999	AGPA29	
GAS GAS	EC 300	250	1999		AGPA29	
GAS GAS	250 WILD HP	250	2008		AGPA29	AGPA29
GAS GAS	GT 250 CONTACT	250			AGPA18	AGPA18
GAS GAS	TX 270	270	1997		AGPA18	AGPA18
GAS GAS	PAMPERA 280	280	2004			AGPA44
GAS GAS	TXT 280	280	2004		AGPA45	AGPA47
GAS GAS	EC 300	300	1999			AGPP91
GAS GAS	EC 300	300	2000	2011		AGPP90
GAS GAS	EC 300	300	2000	2012	AGPA51	
GAS GAS	TXT 300	300	2004		AGPA45	AGPA47
GAS GAS	TXT 300 PRO	300	2007		AGPA45	AGPA47
GAS GAS	EC 300	300	2012			AGPP106
GAS GAS	300 WILD HP	300	2003		AGPA29	AGPA29
GAS GAS	TX 320	320	1997		AGPA18	AGPA18
GAS GAS	325 HALLEY PXC	325			AGPA18	AGPA18
GAS GAS	GT 327 CONTACT	327			AGPA18	AGPA18
GAS GAS	TRIAL 327	327			AGPA18	AGPA18
GAS GAS	370 PAMPERA	370	1996		AGPA18	AGPA18
GAS GAS	370 PAMPERA	370	1998		AGPA18	AGPA18
GAS GAS	EC 400 FSE	400	2002		AGPA51	AGPP90
GAS GAS	SM 400 FSE	400	2002		AGPA32	AGPP90
GAS GAS	400 PAMPERA	400	2006		AGPA51	AGPP90
GAS GAS	EC 450 FSE	450	2003		AGPA51	AGPP90
GAS GAS	SM 450 FSE	450	2003	2006	AGPA32	AGPP90
GAS GAS	EC 450 FSR	450	2007		AGPA51	AGPP90
GAS GAS	SM 450 FSR	450	2007		AGPA32	AGPP90
GAS GAS	450 WILD HP	450	2003		AGPA29	AGPA29
GAS GAS	EC 515 FSR	515	2008		AGPA51	AGPP90
GAS GAS	515 WILD HP	515	2009		AGPA29	AGPA29
GENERIC						
GENERIC	50 Ideo	50	2006		AGPA222	
GENERIC	50 ROC	50	2008		AGPA222	
GENERIC	50 Stroke	50	2008		AGPA222	
GENERIC	50 XOR	50	2006		AGPA222	
GENERIC	TOXIC 50	50	2007		AGPA20	AGPA13
GENERIC	TRIGGER 50 SM	50	2006		AGPA20	AGPA13
GENERIC	TRIGGER 50 SM COMPETITION	50	2008		AGPA20	AGPA13
GENERIC	TRIGGER 50 X	50	2006		AGPA20	AGPA13
GENERIC	TRIGGER 50 X COMPETITION	50	2008		AGPA20	AGPA13
GENERIC	125 XOR	125	2007		AGPA222	
GENERIC	125 Stroke	125	2008		AGPA222	
GENERIC	125 ZION	125	2008		AGPA80	
GENERIC	125 Soho	125	2007		AGPA222	
GENERIC	125 Soho	125	2008		AGPA222	
GILERA						
GILERA	50 EAGLET	50	1997			AGPA83
GILERA	50 RALLY	50	1987		AGPA194	
GILERA	50 RUNNER PJ	50	2006		AGPA20	
GILERA	50 RUNNER SP	50	2006		AGPA20	
GILERA	50 SIOUX	50	1992		AGPA194	AGPA194
GILERA	BULLIT 50	50	1990		AGPA16	
GILERA	DNA 50	50	2001		AGPA20	
GILERA	DNA 50 (HENGTONG CALIPER)	50	2000		AGPA46	
GILERA	DT 50 STALKER	50	2001			AGPA17
GILERA	EASY MOVING 50	50	1995		AGPA13	
GILERA	ICE 50	50	2002		AGPA13	
GILERA	RALLY, R1 50	50			AGPA31	
GILERA	RC 50 TOP RALLY	50	1990		AGPA194	AGPA194
GILERA	RC TOP RALLY 50	50	1990		AGPA31	AGPA31
GILERA	RI 50	50	1991		AGPA194	
GILERA	RK 50	50	1996		AGPA194	AGPA194
GILERA	RUNNER 50	50	1997		AGPA13	
GILERA	RUNNER 50 PJ	50	2006			AGPA17

ACCOSSATO

PASTIGLIE BRAKE PADS

INDICE ANALITICO PASTIGLIE / pads alphabetical index

MARCA Brand	MODELLO Model	CC	DA From	A To	ANT. Front	POST. Rear
GILERA	RUNNER 50 SP	50	1998		AGPA13	
GILERA	RUNNER 50 SP	50	2006			AGPA17
GILERA	RUNNER 50 SP, PURE JET ST	50	1998	2005		AGPA17
GILERA	SIOUX 50	50	1992		AGPA31	AGPA31
GILERA	STALKER 50	50	1997		AGPA13	AGPA17
GILERA	STORM 50	50	1994		AGPA13	
GILERA	TYPHOON 50	50	1993	1996	AGPA13	
GILERA	TYPHOON 50 CATALYZED	50	2002		AGPA13	AGPA13
GILERA	TYPHOON 80	80	1995		AGPA13	
GILERA	125 APACHE	125	1991			AGPA89
GILERA	125 CRONO	125	1992		AGPA33	AGPA194
GILERA	125 CX	125	1991			AGPA194
GILERA	125 FAST BIKE	125	1988			AGPA194
GILERA	125 FREESTYLE	125	1992		AGPA33	AGPA194
GILERA	125 HX / HE	125	1983		AGPA194	
GILERA	125 KK / KR / KZ	125	1986		AGPA28	AGPA194
GILERA	125 MX1 / MXR	125	1989		AGPA33	AGPA194
GILERA	125 NEXUS	125	2007		AGPA20	AGPA20
GILERA	125 R1 / R1S	125	1990		AGPA28	AGPA194
GILERA	125 SKYLINER	125	1998	2010	AGPA29	
GILERA	125 SP	125	2001	2002		AGPA194
GILERA	125 SP02	125	1990		AGPA33	
GILERA	125 THUNDER	125	2001	2003	AGPA29	
GILERA	ARIZONA HAWK 125	125	1986		AGPA31	
GILERA	CRONO 125	125	1992			AGPA31
GILERA	CX 125	125	1991		AGPA33	AGPA31
GILERA	DNA 125	125	2001		AGPA20	
GILERA	DNA 125 (HENGTONG CALIPER)	125	2001		AGPA46	
GILERA	ER 125 RALLY	125	1987		AGPA28	
GILERA	FAST BIKE 125	125	1988		AGPA28	
GILERA	FREESTYLE 125	125	1992			AGPA31
GILERA	FX 125 NEXUS	125	2007		AGPA46	AGPA46
GILERA	FX 125 RUNNER	125	1997	1999	AGPA70	
GILERA	FX 125 RUNNER (Grimeca cal.)	125	2000		AGPA20	AGPA17
GILERA	FX 125 RUNNER (Hengtong cal.)	125	2000		AGPA20	AGPA17
GILERA	FX 125 RUNNER SP (Grimeca cal.)	125	2000		AGPA20	AGPA17
GILERA	FX 125 RUNNER SP (Hengtong cal.)	125	2000		AGPA46	AGPA17
GILERA	FX RUNNER 125 SP (HENGTONG CAL.)	125	2000		AGPA20	
GILERA	HX, HE 125	125	1983		AGPA31	
GILERA	KK, KR, KZ 125	125	1986			AGPA31
GILERA	MX1, MRX, SP01 125	125				AGPA31
GILERA	MXR 125	125	1990		AGPA28	AGPA31
GILERA	MXR 125	125	1990			AGPA194
GILERA	R1, R1S 125	125	1990			AGPA31
GILERA	RC 125 TOP RALLY	125	1990			AGPA89
GILERA	RRT 125 NEBRASKA	125	1987		AGPA28	
GILERA	RTX 125	125	1986		AGPA28	
GILERA	RX 125	125	1983		AGPA31	AGPA31
GILERA	RX 125	125	1983		AGPA194	
GILERA	RX 125 ARIZONA HAWK	125	1985		AGPA28	
GILERA	RX 125 ARIZONA HAWK	125	1986		AGPA194	
GILERA	SC 125	125	2006		AGPA142	
GILERA	SC 125	125	2006		AGPA175	
GILERA	SP 01	125	1990		AGPA33	
GILERA	SP 01 125	125	1990			AGPA31
GILERA	SP02 125	125	1990			AGPA31
GILERA	ST 125 RUNNER	125	2012			AGPA17
GILERA	ST 125 RUNNER	125	2008	2012	AGPA20	
GILERA	ST 125 RUNNER	125	2008		AGPA46	
GILERA	ST 125 RUNNER	125	2008	2011		AGPP41
GILERA	SURFER 125	125	2000		AGPA18	AGPA18
GILERA	TYPHOON 125	125	1995		AGPA13	
GILERA	TYPHOON 125 XR KAT	125	2000		AGPA13	
GILERA	VX 125 RUNNER 4T (GRIMECA CAL.)	125	2001		AGPA20	AGPP41
GILERA	VX 125 RUNNER 4T (HENGTONG CAL.)	125	2001		AGPA46	AGPP41
GILERA	VX RUNNER 125 4T (HENGTONG CAL.)	125	2001		AGPA20	
GILERA	X1 125	125	1989		AGPA28	AGPA151
GILERA	XR2 125	125	1990		AGPA28	AGPA31
GILERA	XR2 125	125	1990			AGPA194
GILERA	MAD MUD 175	175	2002		AGPA20	AGPA13
GILERA	DNA 180	180	2001		AGPA20	AGPA13
GILERA	DNA 180 (HENGTONG CALIPER)	180	2001		AGPA46	
GILERA	FX 150 RUNNER	150	1997		AGPA70	
GILERA	FXR 180 RUNNER	180	1997		AGPA70	
GILERA	FXR 180 RUNNER (Grimeca cal.)	180	2000		AGPA20	AGPA17
GILERA	FXR 180 RUNNER (Hengtong cal.)	180	2000		AGPA20	AGPA17
GILERA	FXR 180 RUNNER SP (Grimeca cal.)	180	2000		AGPA20	AGPA17
GILERA	FXR 180 RUNNER SP (Hengtong cal.)	180	2000		AGPA20	AGPA17
GILERA	FXR 180 RUNNER/ SP (HENGTONG CALIPER)	180	2000		AGPA46	
GILERA	FXR RUNNER 180	180	1998	1999	AGPA20	
GILERA	VXR 180 RUNNER	180	2001		AGPA20	
GILERA	VXR 180 RUNNER	180	2001		AGPA46	
GILERA	VXR 180 RUNNER 4T (GRIMECA CAL.)	180	2001		AGPA20	AGPP41
GILERA	VXR 180 RUNNER 4T (HENGTONG CAL.)	180	2001		AGPA20	AGPP41

PASTIGLIE BRAKE PADS

INDICE ANALITICO PASTIGLIE / pads alphabetical index

MARCA Brand	MODELLO Model	CC	DA From	A To	ANT. Front	POST. Rear
GILERA	VXR 180 RUNNER 4T (HENGTONG CALIPER)	180	2001		AGPA46	
GILERA	200 ARIZONA HAWK	200	1985		AGPA28	
GILERA	200 ER	200	1987		AGPA28	
GILERA	200 FAST BIKE	200			AGPA28	
GILERA	200 FAST BIKE	200	1987			AGPA194
GILERA	200 STALKER	200	1997			AGPA17
GILERA	FAST BIKE 200	200				AGPA31
GILERA	FX 200 RUNNER	200	1997	1998	AGPA70	
GILERA	FX 200 RUNNER SP	200	1998		AGPA20	AGPA17
GILERA	RV 200	200				AGPA31
GILERA	RV 200	200	1985	1986		AGPA194
GILERA	RX 200	200	1983		AGPA31	
GILERA	RX 200	200	1983		AGPA194	
GILERA	ST 200 RUNNER	200	2008		AGPA20	AGPP41
GILERA	ST 200 RUNNER	200	2008		AGPA46	
GILERA	VXR 200 RUNNER 4T (GRIMECA CAL.)	200	2001		AGPA20	AGPP41
GILERA	VXR 200 RUNNER 4T (HENGTONG CAL.)	200	2001		AGPA20	AGPP41
GILERA	VXR 200 RUNNER 4T (HENGTONG CALIPER)	200	2001		AGPA46	
GILERA	250 ARIZONA HAWK	250	1986		AGPA194	
GILERA	250 ARIZONA RALLY	250			AGPA28	
GILERA	250 ARIZONA RALLY	250	1986		AGPA194	
GILERA	250 NEXUS	250	2007		AGPA46	AGPA46
GILERA	250 OREGON QUAD	250	2007		AGPA89	
GILERA	ARIZONA HAWK 250	250	1986		AGPA31	
GILERA	ARIZONA RALLY 250	250				AGPA31
GILERA	ARIZONA RALLY 250	250	1986		AGPA31	
GILERA	NEXUS 250	250	2007		AGPA20	AGPA20
GILERA	NGR 250	250	1985		AGPA151	AGPA31
GILERA	NGR 250	250	1985			AGPA194
GILERA	OREGON QUAD 250	250	2007			AGPA43
GILERA	350 DAKOTA	350			AGPA28	
GILERA	350 SATURNO BIALBERO	350			AGPA32	AGPA194
GILERA	350 SATURNO BIALBERO	350	1990			AGPA194
GILERA	SATURNO BIALBERO 350	350				AGPA31
GILERA	XRT 350	350	1990			AGPA31
GILERA	XRT 350	350	1990		AGPA28	AGPA194
GILERA	500 DAKOTA	500	1986		AGPA28	
GILERA	500 NEXUS	500	2004		AGPA29	AGPA42
GILERA	500 SATURNO BIALBERO	500	1990		AGPA32	AGPA194
GILERA	500 SATURNO PIUMA	500	1990		AGPA32	AGPA194
GILERA	RC 500 FUOCO IE	500	2008		AGPA17	AGPP161
GILERA	SATURNO BIALBERO 500	500	1990			AGPA31
GILERA	SATURNO PIUMA 500	500	1990			AGPA31
GILERA	600 NORDWEST	600	1991		AGPA33	AGPA194
GILERA	600 SUPERSPORT	600	2002		AGPA112	AGPA42
GILERA	NORDWEST 600	600	1991			AGPA31
GILERA	RC 600	600	1988		AGPA28	AGPA31
GILERA	RC 600	600	1988			AGPA194
GILERA	RC 600 TOP RALLY	600	1990			AGPA89
GILERA	XRT 600	600	1989		AGPA28	AGPA31
GILERA	XRT 600	600	1989			AGPA194
GILERA	GP 800	800	2008		AGPA29	AGPA20
GILERA	GP 800	800	2008			AGPA46
GILERA	SP		2001	1990		AGPA194
HAO-QING						
HAO-QING	125 2C	125	2002		AGPA221	
HARLEY DAVIDSON						
HARLEY DAVIDSON	XG STREET 500	500	2014		AGPA218	AGPA218
HARLEY DAVIDSON	XG STREET 750	750	2015		AGPA218	AGPA218
HARLEY DAVIDSON	XL 883 L SUPER LOW	883	2014		AGPA87	AGPP143
HARLEY DAVIDSON	XL 883 N IRON	883	2014		AGPA87	AGPP143
HARLEY DAVIDSON	XL 883 R ROADSTER	883	2014		AGPA87	AGPP143
HARLEY DAVIDSON	XL C SPORTSTER CUSTOM 883	883	2004	2013	AGPA216	AGPP217
HARLEY DAVIDSON	XL L SPORTSTER LOW 883	883	2006	2013	AGPA216	AGPP217
HARLEY DAVIDSON	XL L SUPER LOW 883	883	2011	2013	AGPA216	AGPP217
HARLEY DAVIDSON	XL N IRON 883	883	2013		AGPA216	AGPP217
HARLEY DAVIDSON	XL R ROADSTER 883	883	2010	2013	AGPA216	AGPP217
HARLEY DAVIDSON	XL R SPORTSTER 883	883	2000	2003	AGPA215	AGPA215
HARLEY DAVIDSON	XL SPORTSTER 883	883	2004	2013	AGPA216	AGPP217
HARLEY DAVIDSON	XL SPORTSTER CUSTOM 883	883	2000	2003	AGPA215	AGPA215
HARLEY DAVIDSON	XL SPORTSTER R 883	883	2005	2013	AGPA216	AGPP217
HARLEY DAVIDSON	XLH SPORTSTER 883	883	2000	2003	AGPA215	AGPA215
HARLEY DAVIDSON	XLH SPORTSTER HUGGER 883	883	2000	2003	AGPA215	AGPA215
HARLEY DAVIDSON	VRSCA V-ROD 1130	1130	2002	2005	AGPA215	AGPA215
HARLEY DAVIDSON	VRSCA V-ROD 1130	1130	2006		AGPA219	AGPA219
HARLEY DAVIDSON	VRSCB V-ROD 1130	1130	2004		AGPA215	AGPA215
HARLEY DAVIDSON	VRSCD NIGHT ROD 1130	1130	2006		AGPA219	AGPA219
HARLEY DAVIDSON	VRSCR STREET ROD 1130	1130	2006		AGPA219	AGPA219
HARLEY DAVIDSON	N NIGHTSTER 1200	1200	2007		AGPA216	AGPP217

ACCOSSATO

PASTIGLIE BRAKE PADS

INDICE ANALITICO PASTIGLIE / pads alphabetical index

MARCA Brand	MODELLO Model	CC	DA From	A To	ANT. Front	POST. Rear
HARLEY DAVIDSON	X FORTY-EIGHT 1200	1200	2011	2013	AGPA216	AGPP217
HARLEY DAVIDSON	XL 1200 C, CA, CB, CP CUSTOM	1200	2014		AGPA87	AGPP143
HARLEY DAVIDSON	XL 1200 T SUPER LOW	1200	2015		AGPA87	AGPP143
HARLEY DAVIDSON	XL 1200 V	1200	2014			AGPP143
HARLEY DAVIDSON	XL 1200 V SEVENTY-TWO	1200	2014		AGPA87	
HARLEY DAVIDSON	XL 1200 X FORTY-EIGHT	1200	2014		AGPA87	AGPP143
HARLEY DAVIDSON	XL C SPORTSTER CUSTOM 1200	1200	2004		AGPA216	AGPP217
HARLEY DAVIDSON	XL L SPORTSTER LOW 1200	1200	2007		AGPA216	AGPP217
HARLEY DAVIDSON	XL R SPORTSTER ROADSTER 1200	1200	2004		AGPA216	AGPP217
HARLEY DAVIDSON	XL SPORTSTER CUSTOM 1200	1200	2000	2003	AGPA215	AGPA215
HARLEY DAVIDSON	XL SPORTSTER SPORT 1200	1200	2000	2003	AGPA215	AGPA215
HARLEY DAVIDSON	XL V SEVENTY-TWO 1200	1200	2011	2013	AGPA216	AGPP217
HARLEY DAVIDSON	XLH SPORTSTER 1200	1200	2000	2003	AGPA215	AGPA215
HARLEY DAVIDSON	XR 1200	1200	2008		AGPA140	AGPP217
HARLEY DAVIDSON	XR 1200 X	1200	2010		AGPA140	AGPP217
HARLEY DAVIDSON	VRSCAW V-ROD 1250	1250	2008		AGPA219	AGPA219
HARLEY DAVIDSON	VRSCDX NIGHT ROD SPECIAL 1250	1250	2008		AGPA219	AGPA219
HARLEY DAVIDSON	VRSCF MUSCLE 1250	1250	2009		AGPA219	AGPA219
HARLEY DAVIDSON	VRSCX V-ROD 1250	1250	2008		AGPA219	AGPA219
HARLEY DAVIDSON	FLHR/I ROAD KING 1450	1450	2000	2006	AGPA215	AGPA215
HARLEY DAVIDSON	FLHRCI ROAD KING CLASSIC 1450	1450	2000	2006	AGPA215	AGPA215
HARLEY DAVIDSON	FLHRS/I ROAD KING CUSTOM 1450	1450	2004	2006	AGPA215	AGPA215
HARLEY DAVIDSON	FLHT/I ELECTRA GLIDE STANDARD 1450	1450	2000	2006	AGPA215	AGPA215
HARLEY DAVIDSON	FLHTC/I ELECTRA GLIDE STANDARD 1450	1450	2000	2006	AGPA215	AGPA215
HARLEY DAVIDSON	FLHTCUI ULTRA CLASSIC ELECTRA GLIDE 1450	1450	2000	2006	AGPA215	AGPA215
HARLEY DAVIDSON	FLHXI STREET GLIDE 1450	1450	2006		AGPA215	AGPA215
HARLEY DAVIDSON	FLSTC SOFTAIL 1450	1450	2006	2007	AGPA215	AGPA215
HARLEY DAVIDSON	FLSTC/I HERITAGE SOFTAIL CLASSIC 1450	1450	2000	2004	AGPA215	AGPA215
HARLEY DAVIDSON	FLSTCI SOFTAIL 1450	1450	2006		AGPA215	AGPA215
HARLEY DAVIDSON	FLSTF FAT BOY 1450	1450	2006	2007	AGPA215	AGPA215
HARLEY DAVIDSON	FLSTF/I FAT BOY 1450	1450	2000	2004	AGPA215	AGPA215
HARLEY DAVIDSON	FLSTFI FAT BOY 1450	1450	2006		AGPA215	AGPA215
HARLEY DAVIDSON	FLSTI HERITAGE SOFTAIL 1450	1450	2006		AGPA215	AGPP214
HARLEY DAVIDSON	FLSTN/I SOFTAIL DELUXE 1450	1450	2006		AGPA215	AGPA215
HARLEY DAVIDSON	FLSTS/I HERITAGE SPRINGER 1450	1450	2000	2003		AGPA215
HARLEY DAVIDSON	FLSTSC/I SPRINGER SOFTAIL CLASSIC 1450	1450	2006		AGPA215	AGPA215
HARLEY DAVIDSON	FLTR/I ROAD GLIDE CLASSIC 1450	1450	2000	2006	AGPA215	AGPA215
HARLEY DAVIDSON	FXD DYNA SUPER GLIDE 1450	1450	2000	2003	AGPA215	AGPA215
HARLEY DAVIDSON	FXDBI DYNA STREET BOB 1450	1450	2006		AGPA215	AGPA215
HARLEY DAVIDSON	FXDC/I DYNA SUPER GLIDE CUSTOM 1450	1450	2005	2006	AGPA215	AGPA215
HARLEY DAVIDSON	FXDI 35TH ANNIVERSARY SUPER GLIDE 1450	1450	2006		AGPA215	AGPP214
HARLEY DAVIDSON	FXDI DYNA SUPER GLIDE 1450	1450	2004	2006	AGPA215	AGPA215
HARLEY DAVIDSON	FXDL DYNA LOW RIDER 1450	1450	2000	2003	AGPA215	AGPA215
HARLEY DAVIDSON	FXDLI DYNA LOW RIDER 1450	1450	2004	2006	AGPA215	AGPA215
HARLEY DAVIDSON	FXDS DYNA CONVERTIBLE 1450	1450	2000	2002	AGPA215	AGPA215
HARLEY DAVIDSON	FXDWG DYNA WIDE GLIDE 1450	1450	2000	2003	AGPA215	AGPA215
HARLEY DAVIDSON	FXDWGI DYNA WIDE GLIDE 1450	1450	2004	2006	AGPA215	AGPA215
HARLEY DAVIDSON	FXDX DYNA SUPER GLIDE SPORT 1450	1450	2000	2003	AGPA215	AGPA215
HARLEY DAVIDSON	FXDXI DYNA SUPER GLIDE SPORT 1450	1450	2004	2006	AGPA215	AGPA215
HARLEY DAVIDSON	FXDXT DYNA SUPER GLIDE T-SPORT 1450	1450	2000	2003	AGPA215	AGPA215
HARLEY DAVIDSON	FXST/I SOFTAIL STANDARD 1450	1450	2006			AGPP214
HARLEY DAVIDSON	FXST/I SOFTAIL STANDARD 1450	1450	2000	2006	AGPA215	AGPA215
HARLEY DAVIDSON	FXSTB/I NIGHT TRAIN 1450	1450	2006			AGPP214
HARLEY DAVIDSON	FXSTB/I NIGHT TRAIN 1450	1450	2000	2006	AGPA215	AGPA215
HARLEY DAVIDSON	FXSTD/I SOFTAIL DEUCE 1450	1450	2006			AGPP214
HARLEY DAVIDSON	FXSTD/I SOFTAIL DEUCE 1450	1450	2000	2006	AGPA215	AGPA215

PASTIGLIE BRAKE PADS

INDICE ANALITICO PASTIGLIE / pads alphabetical index

MARCA Brand	MODELLO Model	CC	DA From	A To	ANT. Front	POST. Rear
HARLEY DAVIDSON	FXSTS/I SOFTAIL 1450	1450	2006			AGPP214
HARLEY DAVIDSON	FXSTS/I SOFTAIL 1450	1450	2005			AGPA215
HARLEY DAVIDSON	FXSTS/I SPRINGER SOFTAIL 1450	1450	2000	2004		AGPA215
HARLEY DAVIDSON	FLHR ROAD KING 1584	1584	2007		AGPA215	AGPA215
HARLEY DAVIDSON	FLHR ROAD KING 1584	1584	2008	2010	AGPA219	AGPA219
HARLEY DAVIDSON	FLHRC ROAD KING CLASSIC 1584	1584	2007		AGPA215	AGPA215
HARLEY DAVIDSON	FLHRC ROAD KING CLASSIC 1584	1584	2008		AGPA219	AGPA219
HARLEY DAVIDSON	FLHRS ROAD KING CUSTOM 1584	1584	2007		AGPA215	AGPA215
HARLEY DAVIDSON	FLHT ELECTRA GLIDE STANDARD 1584	1584	2007		AGPA215	AGPA215
HARLEY DAVIDSON	FLHT ELECTRA GLIDE STANDARD 1584	1584	2008		AGPA219	AGPA219
HARLEY DAVIDSON	FLHTC ELECTRA GLIDE CLASSIC 1584	1584	2007		AGPA215	AGPA215
HARLEY DAVIDSON	FLHTC ELECTRA GLIDE CLASSIC 1584	1584	2008		AGPA219	AGPA219
HARLEY DAVIDSON	FLHTCI ULTRA ELECTRA GLIDE CLASSIC 1584	1584	2008		AGPA219	AGPA219
HARLEY DAVIDSON	FLHTCUI ULTRA CLASSIC ELECTRA GLIDE 1584	1584	2007	2010	AGPA215	AGPA215
HARLEY DAVIDSON	FLHTK ELECTRA GLIDE ULTRA LTD 1584	1584	2010		AGPA219	AGPA219
HARLEY DAVIDSON	FLHX STREET GLIDE 1584	1584	2008		AGPA219	AGPA219
HARLEY DAVIDSON	FLHXI STREET GLIDE 1584	1584	2007		AGPA215	AGPA215
HARLEY DAVIDSON	FLSTC HERITAGE SOFTAIL CLASSIC 1584	1584	2008			AGPP213
HARLEY DAVIDSON	FLSTC HERITAGE SOFTAIL CLASSIC 1584	1584	2006			AGPP214
HARLEY DAVIDSON	FLSTC HERITAGE SOFTAIL CLASSIC 1584	1584	2007		AGPA215	
HARLEY DAVIDSON	FLSTC HERITAGE SOFTAIL CLASSIC 1584	1584	2008		AGPA220	
HARLEY DAVIDSON	FLSTF FAT BOY 1584	1584	2008			AGPP213
HARLEY DAVIDSON	FLSTF FAT BOY 1584	1584	2007			AGPP214
HARLEY DAVIDSON	FLSTF FAT BOY 1584	1584	2007		AGPA215	
HARLEY DAVIDSON	FLSTF FAT BOY 1584	1584	2008		AGPA220	

MARCA Brand	MODELLO Model	CC	DA From	A To	ANT. Front	POST. Rear
HARLEY DAVIDSON	FLSTFB FAT BOY SPECIAL 1584	1584	2010			AGPP213
HARLEY DAVIDSON	FLSTFB FAT BOY SPECIAL 1584	1584	2010		AGPA220	
HARLEY DAVIDSON	FLSTN SOFTAIL DELUXE 1584	1584	2008			AGPP213
HARLEY DAVIDSON	FLSTN SOFTAIL DELUXE 1584	1584	2007			AGPP214
HARLEY DAVIDSON	FLSTN SOFTAIL DELUXE 1584	1584	2007		AGPA215	
HARLEY DAVIDSON	FLSTN SOFTAIL DELUXE 1584	1584	2008		AGPA220	
HARLEY DAVIDSON	FLSTSC/I SOFTAIL 1584	1584	2007			AGPP214
HARLEY DAVIDSON	FLTR ROAD GLIDE 1584	1584	2008		AGPA219	AGPA219
HARLEY DAVIDSON	FLTRU ROAD GLIDE ULTRA 1584	1584	2011		AGPA219	AGPA219
HARLEY DAVIDSON	FLTRX ROAD GLIDE CUSTOM 1584	1584	2010		AGPA219	AGPA219
HARLEY DAVIDSON	FXCW ROCKER 1584	1584	2008			AGPP213
HARLEY DAVIDSON	FXCW ROCKER 1584	1584	2008		AGPA220	
HARLEY DAVIDSON	FXCWC ROCKER C 1584	1584	2008			AGPP213
HARLEY DAVIDSON	FXCWC ROCKER C 1584	1584	2008		AGPA220	
HARLEY DAVIDSON	FXD DYNA SUPER GLIDE 1584	1584	2008			AGPP213
HARLEY DAVIDSON	FXD DYNA SUPER GLIDE 1584	1584	2007		AGPA215	AGPA215
HARLEY DAVIDSON	FXD DYNA SUPER GLIDE 1584	1584	2008		AGPA220	
HARLEY DAVIDSON	FXDB DYNA STREET BOB 1584	1584	2008	2013		AGPP213
HARLEY DAVIDSON	FXDB DYNA STREET BOB 1584	1584	2007		AGPA215	AGPA215
HARLEY DAVIDSON	FXDB DYNA STREET BOB 1584	1584	2008	2013	AGPA220	
HARLEY DAVIDSON	FXDC DYNA SUPER GLIDE CUSTOM 1584	1584	2008			AGPP213
HARLEY DAVIDSON	FXDC DYNA SUPER GLIDE CUSTOM 1584	1584	2007		AGPA215	AGPA215
HARLEY DAVIDSON	FXDC DYNA SUPER GLIDE CUSTOM 1584	1584	2008		AGPA220	
HARLEY DAVIDSON	FXDF FAT BOB 1584	1584	2008			AGPP213
HARLEY DAVIDSON	FXDF FAT BOB 1584	1584	2008		AGPA220	
HARLEY DAVIDSON	FXDL DYNA LOW RIDER 1584	1584	2008			AGPP213
HARLEY DAVIDSON	FXDL DYNA LOW RIDER 1584	1584	2008		AGPA220	
HARLEY DAVIDSON	FXDWG DYNA WIDE GLIDE 1584	1584	2008			AGPP213
HARLEY DAVIDSON	FXDWG DYNA WIDE GLIDE 1584	1584	2007		AGPA215	AGPA215

ACCOSSATO

PASTIGLIE BRAKE PADS

INDICE ANALITICO PASTIGLIE / pads alphabetical index

MARCA Brand	MODELLO Model	CC	DA From	A To	ANT. Front	POST. Rear
HARLEY DAVIDSON	FXDWG DYNA WIDE GLIDE 1584	1584	2008		AGPA220	
HARLEY DAVIDSON	FXKL DYNA LOW RIDER 1584	1584	2007		AGPA215	AGPA215
HARLEY DAVIDSON	FXST SOFTAIL STANDARD 1584	1584	2008			AGPP213
HARLEY DAVIDSON	FXST SOFTAIL STANDARD 1584	1584	2007			AGPP214
HARLEY DAVIDSON	FXST SOFTAIL STANDARD 1584	1584	2007		AGPA215	
HARLEY DAVIDSON	FXST SOFTAIL STANDARD 1584	1584	2008		AGPA220	
HARLEY DAVIDSON	FXSTB NIGHT TRAIN 1584	1584	2008			AGPP213
HARLEY DAVIDSON	FXSTB NIGHT TRAIN 1584	1584	2007			AGPP214
HARLEY DAVIDSON	FXSTB NIGHT TRAIN 1584	1584	2007		AGPA215	
HARLEY DAVIDSON	FXSTB NIGHT TRAIN 1584	1584	2008		AGPA220	
HARLEY DAVIDSON	FXSTC SOFTAIL CUSTOM 1584	1584	2008			AGPP213
HARLEY DAVIDSON	FXSTC SOFTAIL CUSTOM 1584	1584	2007			AGPP214
HARLEY DAVIDSON	FXSTC SOFTAIL CUSTOM 1584	1584	2007		AGPA215	
HARLEY DAVIDSON	FXSTC SOFTAIL CUSTOM 1584	1584	2008		AGPA220	
HARLEY DAVIDSON	FXSTD SOFTAIL DEUCE 1584	1584	2007			AGPP214
HARLEY DAVIDSON	FXSTD SOFTAIL DEUCE 1584	1584	2007		AGPA215	
HARLEY DAVIDSON	FLD SWITCHBACK 1690	1690	2012		AGPA220	AGPP213
HARLEY DAVIDSON	FLHR ROAD KING 1690	1690	2011		AGPA219	AGPA219
HARLEY DAVIDSON	FLHRC ROAD KING CLASSIC 1690	1690	2011		AGPA220	AGPP213
HARLEY DAVIDSON	FLHTC ELECTRA GLIDE CLASSIC 1690	1690	2011		AGPA220	AGPP213
HARLEY DAVIDSON	FLHTCU ULTRA CLASSIC ELECTRA GLIDE 1690	1690	2011		AGPA219	AGPA219
HARLEY DAVIDSON	FLHTCUL ELECTRA GLIDE ULTRA CLASSIC LOW 1690	1690	2015		AGPA219	AGPA219
HARLEY DAVIDSON	FLHTCUTG TRI GLIDE ULTRA CLASSIC TRIKE 1690	1690	2009	2013	AGPA219	
HARLEY DAVIDSON	FLHTK ULTRA CLASSIC GLIDE 1690	1690	2010		AGPA219	AGPA219
HARLEY DAVIDSON	FLHTK ULTRA ELECTRA GLIDE 1690	1690	2011		AGPA220	AGPP213
HARLEY DAVIDSON	FLHTKL ULTRA LIMITED LOW 1690	1690	2015		AGPA219	AGPA219
HARLEY DAVIDSON	FLHX STREET GLIDE 1690	1690	2011		AGPA219	AGPA219
HARLEY DAVIDSON	FLHXS STREET GLIDE SPECIAL 1690	1690	2014		AGPA219	AGPA219
HARLEY DAVIDSON	FLHXXX STREET GLIDE TRIKE 1690	1690	2010		AGPA219	
HARLEY DAVIDSON	FLS SOFTAIL SLIM 1690	1690	2012		AGPA220	AGPP213
HARLEY DAVIDSON	FLSTC HERITAGE SOFTAIL CLASSIC 1690	1690	2012		AGPA220	AGPP213
HARLEY DAVIDSON	FLSTF FAT BOY 1690	1690	2012		AGPA220	AGPP213
HARLEY DAVIDSON	FLSTF FAT BOY SPECIAL 1690	1690	2012		AGPA220	AGPP213
HARLEY DAVIDSON	FLSTFB FAT BOY 1690	1690	2012		AGPA220	AGPP213
HARLEY DAVIDSON	FLSTN SOFTAIL DELUXE 1690	1690	2012		AGPA220	AGPP213
HARLEY DAVIDSON	FLTRX ROAD GLIDE CUSTOM 1690	1690	2015		AGPA219	AGPA219
HARLEY DAVIDSON	FLTRXS ROAD GLIDE SPECIAL 1690	1690	2015		AGPA219	AGPA219
HARLEY DAVIDSON	FXDB DYNA STREET BOB 1690	1690	2014		AGPA220	AGPP213
HARLEY DAVIDSON	FXDBA STREET BOB 1690	1690	2013		AGPA220	AGPP213
HARLEY DAVIDSON	FXDBB STREET BOB 1690	1690	2014		AGPA220	AGPP213
HARLEY DAVIDSON	FXDBP STREET BOB 1690	1690	2013		AGPA220	AGPP213
HARLEY DAVIDSON	FXDC DYNA SUPER GLIDE CUSTOM 1690	1690	2014		AGPA220	AGPP213
HARLEY DAVIDSON	FXDF FAT BOB 1690	1690	2012		AGPA220	AGPP213
HARLEY DAVIDSON	FXDF WIDE GLIDE 1690	1690	2012		AGPA220	AGPP213
HARLEY DAVIDSON	FXDL LOW RIDER 1690	1690	2014		AGPA220	AGPP213
HARLEY DAVIDSON	FXS BLACKLINE 1690	1690	2013		AGPA220	AGPP213
HARLEY DAVIDSON	FXSB BREAKOUT 1690	1690	2014		AGPA220	AGPP213
HARLEY DAVIDSON	FLHRSE CVO ROAD KING 1802	1802	2014		AGPA219	AGPA219
HARLEY DAVIDSON	FLHTKSE CVO LIMITED 1802	1802	2014		AGPA219	AGPA219
HARLEY DAVIDSON	FLHXSECVO STREET GLIDE 1802	1802	2010		AGPA219	AGPA219
HARLEY DAVIDSON	FLSTNSE CVO SOFTAIL DELUXE 1802	1802	2014		AGPA220	AGPP213
HARLEY DAVIDSON	FLTRUSE CVO ROAD GLIDE ULTRA 1802	1802	2011		AGPA219	AGPA219
HARLEY DAVIDSON	FXSBSE CVO BREAKOUT 1802	1802	2013		AGPA220	AGPP213
HARLEY DAVIDSON	BRAKING FRONT				AGPA124	
HARLEY DAVIDSON	SEVENTY-TWO					AGPP143
HERCULES						
HERCULES	GIPSY 50	50	1993		AGPA13	
HERCULES	280 ATV	280	2007		AGPA173	

PASTIGLIE BRAKE PADS

INDICE ANALITICO PASTIGLIE / pads alphabetical index

MARCA Brand	MODELLO Model	CC	DA From	A To	ANT. Front	POST. Rear
HERCULES	300 ATV SPORT	300	2007		AGPA173	
HERCULES	SILVER STAR CLASSIC		1993		AGPA141	
HERCULES	ZX		1986		AGPA194	
HERCULES	ZX		1986		AGPA31	
HHI						
HHI	6 PISTON CALIPER				AGPA124	
HIGHLAND						
HIGHLAND	450 MX	450	2006		AGPA29	AGPP91
HIGHLAND	950 V2 MOTARD	950	2000		AGPA29	AGPP91
HIGHLAND	950 V2 OUTBACK	950	1999		AGPA29	AGPP91
HM						
HM	CRE 50	50	2006			AGPP90
HM	CRE 50 Six Comp. 07-	50	2012			AGPP106
HM	CRM 50 Derapage Comp.	50	2007	2012		AGPP106
HM	125 SUPERMOTARD	125	2000	2002	AGPA51	AGPP90
HM	CR 125 SUPERMOTARD	125	2004	2006	AGPA51	AGPP72
HM	CRE 125 ENDURO	125	1995	2002	AGPA51	
HM	CRE 125 ENDURO	125	2002			AGPP72
HM	CRE 125 ENDURO	125	1995	2001		AGPP90
HM	CRE 125 Six Comp. 10-	125	2011			AGPP106
HM	CRE 125 SUPERMOTARD	125	2003		AGPA51	AGPP90
HM	CRM 125 Derapage Comp. 2T	125	2011	1012		AGPP106
HM	CRM 125 Derapage Comp. 4T	125	2011	2012		AGPP106
HM	CRM 125 X SUPERMOTARD	125	2007		AGPA136	AGPP72
HM	250 SUPERMOTARD	250	2000	2002	AGPA51	AGPP90
HM	CRE 250 ENDURO	250	1995	2002	AGPA51	
HM	CRE 250 ENDURO	250	2002			AGPP72
HM	CRE 250 ENDURO	250	1995	2001		AGPP90
HM	CRE 250 F ENDURO	250	2004		AGPA51	AGPP72
HM	CRE 250 SUPERMOTARD	250	2003	2007	AGPA51	
HM	CRE 250 SUPERMOTARD	250	2004	2007		AGPP72
HM	CRE 250 SUPERMOTARD	250	2003			AGPP90
HM	CRE 250 X ENDURO	250	2004		AGPA51	AGPP72
HM	CRF 250 SUPERMOTARD	250	2004	2006	AGPA51	AGPP72
HM	CRM 250 X SUPERMOTARD	250	2007		AGPA136	AGPP72
HM	CRE 450 F ENDURO	450	2002		AGPA51	AGPP72
HM	CRE 450 X ENDURO	450	2004		AGPA51	AGPP72
HM	CRF 450 SUPERMOTARD	450	2002	2006	AGPA51	AGPP72
HM	CRM 450 X SUPERMOTARD	450	2007		AGPA136	AGPP72
HM	CRM 500 X SUPERMOTARD	500	2007		AGPA136	AGPP72
HONDA						
HONDA	CRM 50 (MADE INSPAIN)	50	1993	1996	AGPA149	
HONDA	LEAD 50	50	1986	1993	AGPA168	
HONDA	MBX 50 S	50	1983	1985	AGPA79	
HONDA	NS 50 F, AERO	50	1988		AGPA79	
HONDA	NS-1 50	50	1991		AGPA79	
HONDA	NSC 50 VISION	50	2010		AGPA171	
HONDA	NSR 50	50	1989	1990	AGPA79	
HONDA	R MONKEY 50	50	1988		AGPA168	
HONDA	SFX 50	50	1995		AGPA13	
HONDA	SH 50 FIFTY	50	1997		AGPA13	
HONDA	SJ 50 BALI	50	1993	1998	AGPA28	
HONDA	SKY 50	50	1997		AGPA13	
HONDA	SKY 50 VETRO	50	2000		AGPA13	
HONDA	SXR 50	50	1997		AGPA13	
HONDA	SZX 50 X8R-S	50	1998			AGPP150
HONDA	SZX 50 X8R-X	50	1998			AGPP150
HONDA	SZX LEAD SCOOTER 50	50	1986		AGPA168	
HONDA	X8R 50 S	50	1998		AGPA13	
HONDA	X8R 50 X	50	1998		AGPA13	
HONDA	ZX LEAD 50	50	1988		AGPA168	
HONDA	CRM 75 R	75	1990	1994	AGPA149	AGPP90
HONDA	NSR 75 FII	75	1988	2000	AGPA79	
HONDA	CR 80 R, RB	80	1992	2002		AGPP90
HONDA	CRM 80	80	1989			AGPP90
HONDA	MBX 80	80	1983	1986	AGPA79	
HONDA	MBX 80	80	1986		AGPA172	
HONDA	MBX 80 DX	80	1982		AGPA79	
HONDA	MBX 80 FWD	80	1983	1986	AGPA88	
HONDA	MBX 80 SW, SWD	80	1983		AGPA79	
HONDA	MTX R 80	80	1987		AGPA172	
HONDA	NSR 80 R	80	1993		AGPA23	
HONDA	NSR 80 R	80	1987	1992	AGPA79	
HONDA	CR 85 R, R EXPERT	85	2003		AGPA111	AGPP90
HONDA	EX 100 BALI	100	1996		AGPA28	
HONDA	NSF 100	100	2006		AGPA23	AGPP90
HONDA	SH 100	100	1997		AGPA13	
HONDA	SJ 100 BALI	100	1997		AGPA28	
HONDA	NHX 110	110	2008	2009	AGPA40	
HONDA	NSC 110 VISION	110	2010	2012	AGPA171	
HONDA	SCV 110 LEAD	110	2010	2011	AGPA171	
HONDA	CB 125 RS	125	1983		AGPA88	
HONDA	CR RE / RF 125	125	1984	1985	AGPA172	
HONDA	MBX 125 RWB	125	1984		AGPA79	
HONDA	MTX R 125	125	1984	1995	AGPA172	
HONDA	CR RG 125	125	1986		AGPA172	
HONDA	XL R 125	125	1986		AGPA172	
HONDA	CR 125 RH, RJ, RK	125	1987	1994		AGPP90
HONDA	CR RH / RJ / RK 125	125	1987	1994	AGPA149	
HONDA	CBX 125 Custom	125	1988		AGPA79	
HONDA	NSR F 125	125	1988	1989	AGPA172	
HONDA	R LEAD 125	125	1988		AGPA168	

ACCOSSATO

PASTIGLIE BRAKE PADS

INDICE ANALITICO PASTIGLIE / pads alphabetical index

MARCA Brand	MODELLO Model	CC	DA From	A To	ANT. Front	POST. Rear
HONDA	125 NS	125	1989			AGPA168
HONDA	NS 125	125	1989		AGPA122	
HONDA	NS 125	125	1989		AGPA146	
HONDA	NSR 125 R (ITALY)	125	1989			AGPA194
HONDA	CRM 125 / R	125	1990	1998		AGPA194
HONDA	NSR 125 F / R	125	1990	1992		AGPA194
HONDA	125 RS R	125	1991	1994	AGPA72	AGPA168
HONDA	CH 125 SPACY	125	1994		AGPA40	
HONDA	125 RS R	125	1995			AGPA168
HONDA	CA 125 REBEL	125	1995	1996	AGPA80	
HONDA	CR 125 R	125	1995	2001	AGPA51	AGPP90
HONDA	RS 125	125	1995		AGPA32	
HONDA	RS 125 R	125	1995		AGPA192	
HONDA	XLR 125 R	125	1998		AGPA51	
HONDA	XLV 125 Varadero 01	125	2001			AGPP226
HONDA	CR 125	125	2002	2007		AGPP72
HONDA	CR 125	125	2002	2007	AGPA51	
HONDA	CRE 125	125	2002		AGPA51	AGPP72
HONDA	SES 125 DYLAN	125	2002		AGPA40	
HONDA	SH 125	125	2002	2008	AGPA40	
HONDA	FS 125 Sonic	125	2003		AGPA79	
HONDA	XR 125 L	125	2003		AGPA51	
HONDA	CBR 125 R	125	2004	2011	AGPA160	
HONDA	CBR 125 R 04	125	2004	2010		AGPP226
HONDA	CG 125	125	2004		AGPA88	
HONDA	FES 125 7/9/A S-WING	125	2007	2013		AGPP95
HONDA	FES 125 A7/ A9/AA S-WING	125	2007	2015		AGPP95
HONDA	PS 125 I	125	2007		AGPA40	
HONDA	CBF 125	125	2009		AGPA160	
HONDA	PCX 125	125	2009		AGPA171	
HONDA	SH 125i 9/A/B FUEL INJECTION	125	2009	2012		AGPP95
HONDA	SH 125i RA FUEL INJECTION (REAR DISC MODEL)	125	2010	2014		AGPP95
HONDA	CBR 125 R	125	2011			AGPP181
HONDA	SH 125	125	2013		AGPA72	
HONDA	MSX 125	125	2014		AGPA160	AGPP181
HONDA	SH 125i (2 PISTON CALIPER)	125	2014	2015		AGPP95
HONDA	125 FORZA	125	2015		AGPA72	
HONDA	NS 125 ITALY	125	1985	1988	AGPA28	
HONDA	XL 125 R, P.D., ITALY	125	1985		AGPA28	
HONDA	MTX 125 R, ITALY	125	1986		AGPA28	
HONDA	RTV 125 NRS, ITALY	125	1987		AGPA28	
HONDA	XL 125 R, P.D., ITALY, EX	125	1987		AGPA28	
HONDA	MTX 125 CAMEL, ITALY	125	1988		AGPA28	
HONDA	NSR 125 R, ITALY	125	1989		AGPA28	
HONDA	CRM 125 , R	125	1990	1998	AGPA28	
HONDA	NSR 125 F, R	125	1990	1992	AGPA28	
HONDA	NX 125 , TRANSCITY	125	1990	1998	AGPA28	
HONDA	CA 125 REBEL	125	1997		AGPA28	
HONDA	FES 125 PANTHEON	125	1998	2006	AGPA25	

MARCA Brand	MODELLO Model	CC	DA From	A To	ANT. Front	POST. Rear
HONDA	CLR 125 CITYFLY	125	1999		AGPA28	
HONDA	VT 125 C1 SHADOW	125	1999		AGPA23	
HONDA	VT 125 C2 SHADOW	125	1999	2000	AGPA23	
HONDA	VT 125 C2 SHADOW	125	2001		AGPA23	
HONDA	XLV 125 Varadero	125	2001		AGPA23	
HONDA	CBR 150 R	150	2000	2004	AGPA160	
HONDA	CBR 150 R	150	2000	2003		AGPP226
HONDA	NSR 150	150	2002			AGPA76
HONDA	SES 150 DYLAN	150	2002		AGPA40	
HONDA	SH 150	150	2002	2008	AGPA40	
HONDA	CRF 150 F	150	2003		AGPA51	
HONDA	CBR 150 R 04	150	2004			AGPP226
HONDA	CG 150	150	2004		AGPA88	
HONDA	CRF 150 R	150	2007		AGPA111	AGPP72
HONDA	FES 150 A7/ A9/AA S-WING	150	2007	2013		AGPP95
HONDA	PS 150 I	150	2007		AGPA40	
HONDA	SH 150i 9/A/B FUEL INJECTION	150	2009	2012		AGPP95
HONDA	SH 150i RA FUEL INJECTION (REAR DISC MODEL)	150	2010	2014		AGPP95
HONDA	PCX 150	150	2012		AGPA171	
HONDA	SH 150	150	2013		AGPA72	
HONDA	SH 150i (2 PISTON CALIPER)	150	2014	2015		AGPP95
HONDA	FES 150 PANTHEON	150	1999	2006	AGPA25	
HONDA	NSR 150	150	2002		AGPA23	
HONDA	NS - 1 75	175	1992		AGPA23	
HONDA	ATC 200 X	200	1983	1985	AGPA111	
HONDA	CTX 200	200	2004		AGPA51	
HONDA	MTX R 200	200	1985		AGPA172	
HONDA	XL 200 R, P.D., ITALY	200	1985		AGPA28	
HONDA	CRF 230	223	2004	2009	AGPA51	
HONDA	CRF 230 L	223	2008		AGPA51	
HONDA	CRF 230 M	223	2009		AGPA51	
HONDA	SL 230	223	1997		AGPA51	
HONDA	CRF 230 L	230	2008			AGPP90
HONDA	CRF 230 M	230	2009			AGPP90
HONDA	SL 230	230	1997			AGPP90
HONDA	ATC 250 R	250	1981		AGPA88	
HONDA	VT 250 F	250	1983	1987	AGPA79	
HONDA	CR 250 RE, RF	250	1984	1985	AGPA172	
HONDA	XL 250 R	250	1984	1987	AGPA172	
HONDA	XR 250 R	250	1984	1987	AGPA172	
HONDA	ATC 250 R	250	1985	1986	AGPA172	AGPA172
HONDA	ATC 250 X	250	1985		AGPA172	
HONDA	CB 250 RS	250	1985		AGPA172	
HONDA	CH 250 SPACY	250	1985	1986	AGPA172	
HONDA	CMX 250 Rebel	250	1985		AGPA79	
HONDA	CB 250 Rebel	250	1986		AGPA79	
HONDA	CBR 250 F	250	1986		AGPA195	
HONDA	CR 250 RG	250	1986		AGPA172	
HONDA	FTR 250	250	1986		AGPA172	AGPA172
HONDA	TRX 250 R	250	1986	1989	AGPA149	AGPA172
HONDA	CBR 250 HURRICANE	250	1987		AGPA195	AGPP89

PASTIGLIE BRAKE PADS

INDICE ANALITICO PASTIGLIE / pads alphabetical index

MARCA Brand	MODELLO Model	CC	DA From	A To	ANT. Front	POST. Rear
HONDA	CR 250 R	250	1987	1994	AGPA149	AGPP90
HONDA	NSR 250 R	250	1987		AGPA195	
HONDA	TRX 250 X FOURTRAX	250	1987		AGPA149	AGPA172
HONDA	CBR 250 RJ	250	1988		AGPA72	AGPP89
HONDA	CN 250 SPAZIO	250	1988	1989	AGPA172	
HONDA	NSR 250 RJ	250	1988		AGPA146	AGPP89
HONDA	NSR 250 RJ	250	1988		AGPA122	
HONDA	NX 250	250	1988	1990	AGPA149	
HONDA	VT 250 F	250	1988	1990	AGPA195	
HONDA	VTR 250	250	1988	1989	AGPA79	
HONDA	VTZ 250	250	1988		AGPA195	
HONDA	XLR 250 R	250	1988		AGPA172	
HONDA	XLR 250 R BAJA	250	1988	1990	AGPA149	
HONDA	XR 250 R	250	1988	1995	AGPA149	
HONDA	250 NS	250	1989			AGPA168
HONDA	NS 250	250	1989		AGPA122	
HONDA	NS 250	250	1989		AGPA146	
HONDA	VT 250 SPADA	250	1989		AGPA72	AGPP89
HONDA	AX-1 250	250	1990		AGPA149	
HONDA	CA 250 REBEL	250	1990		AGPA77	
HONDA	CBR 250 R, RR	250	1990		AGPA72	AGPP89
HONDA	CRM 250 R	250	1990		AGPA149	
HONDA	NSR 250 R, SP	250	1990		AGPA122	AGPP89
HONDA	NSR 250 R, SP	250	1990		AGPA146	
HONDA	VTR 250	250	1990		AGPA195	
HONDA	XR 250 R	250	1990	1995		AGPP90
HONDA	250 RS R	250	1991	1993		AGPA168
HONDA	RS 250 R	250	1991	1992	AGPA146	AGPP89
HONDA	RS 250 R	250	1991	1992	AGPA122	
HONDA	XL 250 DEGREE	250	1991		AGPA149	
HONDA	XR 250 L	250	1991	1992	AGPA149	AGPP90
HONDA	CB 250	250	1992	2005	AGPA72	
HONDA	CBR 250 NIGHTHAWK	250	1992		AGPA72	
HONDA	250 STEED	250	1993		AGPA72	
HONDA	CN 250 HELIX (FUSION)	250	1993		AGPA72	
HONDA	RS 250 R	250	1993		AGPA192	
HONDA	RS 250 R	250	1993		AGPA32	
HONDA	XR 250 L	250	1993	1997	AGPA51	
HONDA	XLR 250 R SPL	250	1994		AGPA51	AGPP90
HONDA	CR 250 R	250	1995	2001	AGPA51	
HONDA	CMX 250 C REBEL	250	1996	1997	AGPA80	
HONDA	XR 250 S, R	250	1996		AGPA51	AGPP90
HONDA	VTR 250	250	1998			AGPP89
HONDA	NSS 250	250	2000	2004		AGPP155
HONDA	NSS FORZA 250	250	2000	2004		AGPP155
HONDA	JAZZ 250	250	2001			AGPP155
HONDA	TRX 250 EX SPORTRAX	250	2001	2008	AGPA111	
HONDA	CR 250	250	2002	2007	AGPA51	AGPP72
HONDA	CRE 250	250	2002		AGPA51	AGPP72
HONDA	CRE 250 F	250	2004		AGPA51	AGPP72
HONDA	CRF 250 R	250	2004	2009	AGPA51	AGPP72
HONDA	CRF 250 X	250	2004		AGPA51	AGPP72
HONDA	COTA 250 4RT	250	2005		AGPA45	AGPA47
HONDA	NSS 250 AX5/AX6 (ABS) FORZA Z	250	2005	2006		AGPP95
HONDA	NSS 250 EX5/EX7/ EX8 FORZA EX	250	2005	2008		AGPP95
HONDA	NSS 250 X5/ X7/X8 FORZA	250	2005	2008		AGPP95
HONDA	TRX 250 X	250	2008		AGPA111	
HONDA	CRF 250 R EFI	250	2010	2013	AGPA51	AGPP72
HONDA	CBR 250 R (BYBRE CAL)	250	2011		AGPA92	AGPP91
HONDA	CBR 250 R (NISSIN CAL)	250	2011	2013	AGPA72	AGPP185
HONDA	CBR 250 R ABS (NISSIN CAL)	250	2011	2013	AGPA87	AGPP185
HONDA	CRF 250 L	250	2013			AGPP181
HONDA	CRF 250 M	250	2014			AGPP181
HONDA	CRF 250 R EFI	250	2014			AGPP72
HONDA	CBF 250	250	2004		AGPA23	
HONDA	CRF L 250	250	2013		AGPA212	
HONDA	CRR M 250	250	2014		AGPA212	
HONDA	COTA 260 4RT	260	2014		AGPA45	AGPA47
HONDA	CB 300	300	2010		AGPA23	
HONDA	CBR 300 F	300	2014		AGPA81	AGPP185
HONDA	CBR 300 R	300	2015		AGPA81	
HONDA	NSS 300 AD FORZA	300	2013	2015		AGPP95
HONDA	NSS 300 D FORZA (NON ABS)	300	2015			AGPP95
HONDA	SH 300 I 7/8/9/A/B (NON ABS)	300	2007	2012		AGPP95
HONDA	SH 300 I A7/ A8/A9/AA/AB/ AC (ABS)	300	2007	2013		AGPP95
HONDA	SH 300 I ABS	300	2014			AGPP95
HONDA	SH 300 I AR8/ AR9/ARA (ABS)	300	2008	2010		AGPP95
HONDA	SH 300 I R8/R9/ RA (NON ABS)	300	2008	2010		AGPP95
HONDA	SH 300 I SH30	300	2015		AGPA72	
HONDA	TRX 300 EX SPORTRAX	300	2001	2008	AGPA111	AGPA111
HONDA	TRX 300 X	300	2009		AGPA111	AGPA111
HONDA	XR 300	300	2010		AGPA51	AGPP90
HONDA	ATC 350 X	350	1986		AGPA149	
HONDA	ATC 350 X	350	1985		AGPA172	
HONDA	CB 350 S. G.	350	1987	1990	AGPA195	
HONDA	NX 350	350	1992		AGPA195	
HONDA	XL 350 R	350	1984		AGPA172	
HONDA	XR 350 R	350	1984	1985	AGPA172	
HONDA	CBX 400 F, F2, F2C	400	1982		AGPA79	
HONDA	VF 400 FD	400	1983	1985	AGPA79	
HONDA	VT 400 E	400	1983		AGPA79	
HONDA	VF 400 F	400	1985		AGPA79	
HONDA	CB 400 N	400	1986		AGPA195	
HONDA	VFR 400 R NC21 / NC21 Z	400	1986		AGPA195	AGPA195
HONDA	CBR 400 R	400	1987		AGPA195	
HONDA	CBR 400 RR	400	1987	1989	AGPA72	AGPP89
HONDA	VFR 400 R NC24	400	1987		AGPA195	
HONDA	NTV 400 BROS II	400	1988		AGPA122	AGPP89
HONDA	NTV 400 BROS II	400	1988		AGPA146	
HONDA	CB-1 400 (CB 400 F)	400	1989	1990	AGPA72	AGPP89
HONDA	RVF 400 RR (NC35)	400	1990	1996	AGPA122	

ACCOSSATO

PASTIGLIE BRAKE PADS

INDICE ANALITICO PASTIGLIE / pads alphabetical index

MARCA Brand	MODELLO Model	CC	DA From	A To	ANT. Front	POST. Rear
HONDA	RVF 400 RR (NC35)	400	1990	1996	AGPA146	
HONDA	VTR 400 R (NC 30)	400	1990		AGPA122	
HONDA	VTR 400 R (NC 30)	400	1990		AGPA146	
HONDA	NV 400 STEED	400	1991	1993	AGPA72	
HONDA	VFR 400 R	400	1991	1992	AGPA146	AGPP89
HONDA	VFR 400 R	400	1991	1992	AGPA122	
HONDA	CB 400 SUPER FOUR	400	1992	1995		AGPP89
HONDA	CBR 400 F	400	1992		AGPA195	AGPP88
HONDA	VRX 400 T ROADSTAR	400	1995			AGPP89
HONDA	XR 400 R	400	1996		AGPA51	AGPP90
HONDA	TRX 400 FOURTRAX EX	400	1999		AGPA111	AGPA111
HONDA	XR 400 SUPERMOTARD	400	2000		AGPA51	AGPP90
HONDA	TRX 400 EX SPORTRAX	400	2001	2008	AGPA111	AGPA111
HONDA	TRX 400 X	400	2009		AGPA111	AGPA111
HONDA	TRX 420 FA / FPA	420	2009		AGPA111	
HONDA	TRX 420 FPE / FPM 4X4	420	2009		AGPA111	
HONDA	XR 440 R	435	2000		AGPA51	
HONDA	XR 440 R	440	2000			AGPP90
HONDA	CB 450 S	450	1986		AGPA195	
HONDA	CRE 450 F	450	2002		AGPA51	AGPP72
HONDA	CRF 450 EFI	450	2009	2012	AGPA51	AGPP72
HONDA	CRF 450 R	450	2002	2008	AGPA51	AGPP72
HONDA	CRF 450 R EFI	450	2013		AGPA51	AGPP72
HONDA	CRF 450 X	450	2005		AGPA51	AGPP72
HONDA	TRX 450 EX SPORTRAX	450	2001		AGPA111	AGPA111
HONDA	TRX 450 R	450	2004		AGPA51	
HONDA	VT 500 ED	500	1982		AGPA79	
HONDA	VT 500 E	500	1983	1985	AGPA79	
HONDA	XL 500 R	500	1983		AGPA172	
HONDA	XR 500 R, PRO LINK	500	1983	1984	AGPA172	
HONDA	CR 500 RE, RF	500	1984	1985	AGPA172	
HONDA	CR 500 RG	500	1986		AGPA172	
HONDA	XR 500 R	500	1986		AGPA172	
HONDA	CBR 500 F (AUSTRIA)	500	1987	1990	AGPA195	
HONDA	CR 500 R	500	1987	2001		AGPP90
HONDA	CR 500 R	500	1987	1994	AGPA149	
HONDA	NX 500 DOMINATOR (AUSTRIA)	500	1988	1996		AGPP89
HONDA	CB 500	500	1994	1996	AGPA72	
HONDA	CR 500 R	500	1995	2001	AGPA51	
HONDA	CB 500	500	1997		AGPA92	AGPP91
HONDA	NX 500 DOMINATOR	500	1997			AGPP91
HONDA	CB 500 S	500	1998		AGPA92	AGPP91
HONDA	CBF 500	500	2004		AGPA81	AGPP88
HONDA	CBF 500 ABS	500	2004		AGPA87	AGPP88
HONDA	CB 500 F	500	2013		AGPA81	AGPP185
HONDA	CB 500 X	500	2013		AGPA81	AGPP185
HONDA	CBR 500 R	500	2013		AGPA81	AGPP185

MARCA Brand	MODELLO Model	CC	DA From	A To	ANT. Front	POST. Rear
HONDA	NX 500 DOMINATOR (AUSTRIA)	500	1997		AGPA29	
HONDA	CBX 550 F, F2	550	1982		AGPA79	
HONDA	XL 600 R	600	1983	1987	AGPA172	
HONDA	XR 600 R	600	1983	1987	AGPA172	
HONDA	CBR 600 F HURRICANE	600	1987	1990	AGPA195	
HONDA	XLM 600 LM	600	1987		AGPA172	
HONDA	NTV 600 BROS I	600	1988		AGPA122	AGPP89
HONDA	NTV 600 BROS I	600	1988		AGPA146	
HONDA	NTV 600 REVERE	600	1988	1992		AGPP89
HONDA	NTV 600 RÉVÉRÉ	600	1988		AGPA195	
HONDA	XR 600 R	600	1988	1992	AGPA149	
HONDA	VT 600 C SHADOW	600	1989	1991	AGPA195	
HONDA	CBR 600 F / F SUPERSPORT	600	1991	1994	AGPA195	
HONDA	CBR 600 F, SUPER SPORT	600	1991	1994		AGPP88
HONDA	XL 600 V, TRANSALPINO	600	1991	1999		AGPP89
HONDA	XR 600 R	600	1991	2000		AGPP90
HONDA	600 STEED	600	1992		AGPA72	
HONDA	XR 600 R	600	1993	2000	AGPA51	
HONDA	VT 600 C, SHADOW	600	1994	2000	AGPA72	
HONDA	VT 600 CD SHADOW VLX	600	1994	2000	AGPA72	
HONDA	XL 600 V, TRANSALPINO	600	1994	1996	AGPA81	
HONDA	CBR 600 F3	600	1995	1998	AGPA72	AGPP88
HONDA	XL 600 V, TRANSALPINO	600	1997	1999	AGPA51	
HONDA	CB 600 HORNET	600	1998	2007	AGPA72	
HONDA	CB 600 HORNET	600	1998	2006		AGPP88
HONDA	CB 600 HORNET (JAPAN)	600	1998		AGPA105	AGPP88
HONDA	CBR 600 F4, F4 SPORT	600	1999		AGPA105	AGPP88
HONDA	CB 600 HORNET S	600	2000			AGPP88
HONDA	CBR 600 RR	600	2003	2004	AGPA105	AGPP88
HONDA	CBF 600	600	2004	2007	AGPA72	AGPP88
HONDA	CBR 600 RR (RAD.CAL)	600	2005	2006		AGPP88
HONDA	CBR 600 RR (RAD.CAL)	600	2005	2007	AGPA108	
HONDA	CB 600 F7/F8/ F9/FA/FB/FC	600	2007	2013		AGPP39
HONDA	CB 600 HORNET ABS	600	2007		AGPA87	AGPP88
HONDA	CBR 600 RR7/ RR8/RR9/RRA/ RRB/RRC/RRD	600	2007	2013		AGPP39
HONDA	CBF 600 N	600	2008		AGPA87	AGPP88
HONDA	CBF 600 S	600	2008		AGPA87	AGPP88
HONDA	CBR 600 RR HANNSPREE	600	2008			AGPP39
HONDA	CBR 600 RA9/ RAA/RAB/RAC/ RAD (C-ABS)	600	2009	2013		AGPP39

PASTIGLIE BRAKE PADS

ACCOSSATO

INDICE ANALITICO PASTIGLIE / pads alphabetical index

MARCA Brand	MODELLO Model	CC	DA From	A To	ANT. Front	POST. Rear
HONDA	CBR 600 RR (RAD.CAL) ABS	600	2009		AGPA108	
HONDA	CBR 600 F	600	2011		AGPA72	
HONDA	CBR 600 F ABS	600	2011		AGPA87	AGPP88
HONDA	CBR 600 FB/FC	600	2011	2013		AGPP39
HONDA	CBX 650 E	650	1983		AGPA79	
HONDA	NT 650 HAWK GT	650	1988	1991	AGPA72	AGPP89
HONDA	NTV 650 BROS	650	1988	1997	AGPA122	AGPP89
HONDA	NTV 650 BROS	650	1988	1997	AGPA146	
HONDA	NTV 650 REVERE	650	1988	1993	AGPA72	AGPP89
HONDA	NX 650 DOMINATOR J-K	650	1988	1992		AGPP89
HONDA	XRV 650 AFRICA TWIN	650	1988	1989		AGPP89
HONDA	NX 650 DOMINATOR	650	1993	1996		AGPP89
HONDA	XR 650 L	650	1993		AGPA51	AGPP90
HONDA	NTV 650	650	1994			AGPP89
HONDA	NX 650 DOMINATOR	650	1997			AGPP91
HONDA	SLR 650	650	1997		AGPA92	AGPP91
HONDA	NT 650 V DEAUVILLE	650	1998	2000		AGPP89
HONDA	NT 650 V DEAUVILLE	650	1998	2001	AGPA92	
HONDA	SX 650 VIGOR	650	1999	2002	AGPA92	AGPP91
HONDA	XL 650 V TRANSALP	650	2000		AGPA51	AGPP89
HONDA	XR 650 R	650	2000		AGPA51	AGPP90
HONDA	NT 650 V DEAUVILLE	650	2001			AGPP88
HONDA	FMX 650	650	2005	2008	AGPA72	AGPP88
HONDA	CB 650 F	650	2014		AGPA81	AGPP185
HONDA	CBR 650 F	650	2014		AGPA81	AGPP185
HONDA	DN-01 680	680	2008		AGPA87	
HONDA	VFR 700 F INTERCEPTOR	700	1988	1989	AGPA72	AGPP89
HONDA	NT 700 DEAUVILLE ABS	700	2006		AGPA87	
HONDA	TRX 700 XX	700	2008		AGPA51	
HONDA	XL 700 TRANSALP	700	2008		AGPA51	AGPP89
HONDA	XL 700 TRANSALP ABS	700	2008		AGPA87	AGPP88
HONDA	NT 700 V VARADERO, ABS	700	2010		AGPA87	
HONDA	NC 700 D INTEGRA	700	2012	2013	AGPA87	AGPP88
HONDA	NC 700 S	700	2012	2013	AGPA72	AGPP89
HONDA	NC 700 SA ABS	700	2012	2013	AGPA87	AGPP88
HONDA	NC 700 SD ABS	700	2012	2013	AGPA87	AGPP88
HONDA	NC 700 X	700	2012	2013	AGPA72	AGPP89
HONDA	NC 700 XA ABS	700	2012	2013	AGPA87	AGPP88
HONDA	NC 700 XD ABS	700	2012	2013	AGPA87	AGPP88
HONDA	CTX 700	700	2014		AGPA81	AGPP185
HONDA	CTX 700 D ABS w/DCT	700	2014		AGPA81	AGPP185
HONDA	CTX 700 N	700	2014		AGPA81	AGPP185
HONDA	CTX 700 ND ABS w/DCT	700	2014		AGPA81	AGPP185
HONDA	NM4 700 VULTUS ABS W/DCT	700	2015		AGPA81	AGPP185
HONDA	VFR 750 F	750	1988	1990	AGPA72	
HONDA	VFR 750 R	750	1988	1988	AGPA122	
HONDA	VFR 750 R	750	1988	1993	AGPA146	
HONDA	XRV 750 AFRICA TWIN	750	1990	2003	AGPA195	AGPP89
HONDA	CB 750 N, F, SEVEN FIFTY	750	1992		AGPA72	AGPP88
HONDA	NR 750	750	1992		AGPA146	AGPP88
HONDA	NR 750	750	1992		AGPA122	
HONDA	XRV 750 AFRICA TWIN	750	1993	2003	AGPA51	
HONDA	RVF 750 RR (RC-45)	750	1994	1998	AGPA122	
HONDA	RVF 750 RR (RC-45)	750	1994	1998	AGPA146	
HONDA	VT 750 C2 SHADOW A.C.E.	750	1997	2003	AGPA81	
HONDA	VT 750 BLACK WIDOW	750	2001		AGPA81	
HONDA	VT 750 C4 SHADOW	750	2004		AGPA81	
HONDA	VT 750 C2 SHADOW SPIRIT	750	2007		AGPA81	
HONDA	VT 750 C2B	750	2011		AGPA81	
HONDA	VT 750 RS	750	2011		AGPA81	
HONDA	VT 750 S	750	2011		AGPA81	
HONDA	NC 750 D INTEGRA	750	2014		AGPA81	AGPP185
HONDA	NC 750 S W/DCT	750	2014		AGPA81	AGPP185
HONDA	NC 750 X W/DCT	750	2014		AGPA81	AGPP185
HONDA	PC 800 PACIFIC COAST	800	1989	1997	AGPA72	
HONDA	VFR 800	800	2006	2013	AGPA87	
HONDA	VFR 800 ABS	800	2006	2013	AGPA87	
HONDA	800 CROSSRUNNER	800	2011		AGPA87	AGPP55
HONDA	VFR 800 F	800	2014		AGPA108	AGPP55
HONDA	VFR 800 X CROSSRUNNER	800	2015		AGPA108	AGPP55
HONDA	CB 900 HORNET	900	2002		AGPA122	AGPP88
HONDA	CB 900 HORNET	900	2002		AGPA146	
HONDA	CBR 900 RR FIREBLADE	900	1998	2003	AGPA105	AGPP88
HONDA	CBR 900 RR, FIREBLADE	900	1992	1997	AGPA146	AGPP88
HONDA	CBR 900 RR, FIREBLADE	900	1992	1997	AGPA122	
HONDA	VFR 950 F, CARAT	950	1992		AGPA72	
HONDA	CBR 1000 F	1000	1989	1992	AGPA72	
HONDA	VFR 1000	1000	1989		AGPA72	
HONDA	CB 1000 F (BIG ONE)	1000	1993	1997	AGPA146	AGPP88
HONDA	CB 1000 F (BIG ONE)	1000	1993	1997	AGPA122	
HONDA	VTR 1000 F FIRESTORM	1000	1997		AGPA122	AGPP88
HONDA	VTR 1000 F FIRESTORM	1000	1997		AGPA146	
HONDA	VTR 1000 SP-1, SP-2	1000	2000		AGPA105	AGPP88
HONDA	CBR 1000 RR FIREBLADE (RAD.CAL)	1000	2004	2005		AGPP88

ACCOSSATO

PASTIGLIE BRAKE PADS

INDICE ANALITICO PASTIGLIE / pads alphabetical index

MARCA Brand	MODELLO Model	CC	DA From	A To	ANT. Front	POST. Rear
HONDA	CBR 1000 RR FIREBLADE (RAD.CAL)	1000	2004	2008	AGPA108	
HONDA	XL 1000 VARADERO ABS	1000	2004		AGPA87	
HONDA	CBF 1000	1000	2006	2011	AGPA81	AGPP88
HONDA	CBF 1000 ABS	1000	2006	2011	AGPA87	AGPA87
HONDA	CBR 1000 RR6/RR7/ RR8/RR9/RRA/ RRB/RRC/RRD	1000	2006	2013		AGPP39
HONDA	XL 1000 VARADERO	1000	2007		AGPA87	
HONDA	CB 1000 R (RAD.CAL)	1000	2008		AGPA108	AGPP55
HONDA	CB 1000 R ABS	1000	2008		AGPA87	AGPP55
HONDA	CBF 1000 LIMITED EDITION	1000	2009	2014	AGPA81	AGPP88
HONDA	CBF 1000 LIMITED EDITION ABS	1000	2009	2014	AGPA87	AGPA87
HONDA	CBR 1000 RA9/ RAA/RAB/RAC/RAD (C-ABS) FIREBLADE	1000	2009	2013		AGPP39
HONDA	CBR 1000 RR FIREBLADE (RAD.CAL) ABS	1000	2009		AGPA108	
HONDA	CBR 1000 RR SP	1000	2014		AGPA186	
HONDA	CBF 1000 F ABS	1000	2015		AGPA87	AGPP88
HONDA	ST 1100	1100	1990	2002	AGPA72	
HONDA	ST 1100 ABS-TCS	1100	1992	1995	AGPA72	
HONDA	VT 1100 C SHADOW	1100	1994	1996		
HONDA	VT 1100 C2 SHADOW A. C . E.	1100	1995		AGPA72	AGPP88
HONDA	VT 1100 C3 SHADOW AERO	1100	1998		AGPA72	AGPP88
HONDA	VT 1100 T SHADOW	1100	1998		AGPA72	AGPP88
HONDA	VT 1100 C2 Y	1100	2000		AGPA72	AGPP88
HONDA	CB 1100	1100	2013		AGPA87	AGPP88
HONDA	CB 1100 , EX	1100	2014		AGPA105	AGPP88
HONDA	ST 1100 A6 ABS-TCS-CBS	1100	1996		AGPA26	AGPA25
HONDA	SCV 110 LEAD	1110	2008	2009	AGPA40	
HONDA	VFR 1200 F	1200	2010		AGPA193	AGPP55
HONDA	VFR 1200 F w/DCT	1200	2010			AGPP240
HONDA	VFR 1200 XC Crosstourer	1200	2012		AGPA87	AGPP240
HONDA	VFR 1200 XDC Crosstourer w/DCT	1200	2012		AGPA87	AGPP240
HONDA	CB 1300 X-4	1300	1997		AGPA122	AGPP143
HONDA	CB 1300 X-4	1300	1997		AGPA146	
HONDA	CB 1300 SF	1300	1998		AGPA124	AGPP143
HONDA	CB 1300 R	1300	2002	2004	AGPA105	AGPP143
HONDA	VTX 1300 S	1300	2003		AGPA72	AGPP88
HONDA	VTX 1300 C	1300	2004		AGPA72	AGPP88
HONDA	CB 1300	1300	2005		AGPA105	AGPP88
HONDA	ST 1300 PAN EUROPEAN, ABS	1300	2008		AGPA87	
HONDA	VT 1300 FURY	1300	2010		AGPA72	AGPP88
HONDA	VT 1300 FURY ABS	1300	2010		AGPA87	
HONDA	CB 1300 S	1300	2011		AGPA87	AGPP88
HONDA	CTX 1300	1300	2014		AGPA87	
HONDA	ST 1300 PAN EUROPEAN , ABS	1300	2002	2008		AGPA25
HONDA	GL 1500 F6 C VALKYRIE	1500	1996	2002	AGPA72	
HONDA	(AUSTRIA)					AGPP91
HONDA	FES 7/9/A S-WING		2007	2013		AGPP95
HONDA	RR-SPE FIREBLADE		2014	2015		AGPP39
HOREX						
HOREX	80 REBELL T	80	1986		AGPA141	AGPA141
HOREX	80 SPORT L	80	1986		AGPA141	AGPA141
HOREX	125 IMPERATOR	125	1996		AGPA141	
HOREX	125 REGENT	125	1996		AGPA141	
HOREX	560 E	560	1986		AGPA141	AGPA141
HOREX	600 COLUMBUS	600	1987		AGPA141	AGPA141
HOREX	VR6 1200	1200	2011		AGPA96	AGPA76
HRD						
HRD	125 SUPERMOTARD	125	2000	2002	AGPA70	
HRD	125 TRAIL	125	2000	2002	AGPA70	
HRD	50 GS ENDURO	50	2000	2002	AGPA70	AGPP91
HRD	50 SONIC 2 SUPERMOTARD	50	2000	2002	AGPA70	
HRD	50 SONIC 2 TRAIL	50	2000	2002	AGPA70	
HRD	SUPERMOTARD 125	125	2000	2002		AGPA18
HRD	TRAIL 125	125	2000	2002		AGPA18
HUSABERG						
HUSABERG	CR 125	125	1996	2004	AGPA29	
HUSABERG	CR 125	125	2005		AGPA29	
HUSABERG	SM 125	125	1998	1999	AGPA29	
HUSABERG	SM 125 S	125	2000	2006	AGPA29	
HUSABERG	TE 125	125	2013			AGPP80
HUSABERG	WR 125	125	1997		AGPA29	
HUSABERG	WRE 125	125	1996		AGPA29	
HUSABERG	WRE 125 SM	125	1999		AGPA29	
HUSABERG	CR 250	250	1997	2005	AGPA29	
HUSABERG	TC 250	250	2002	2004	AGPA29	
HUSABERG	TE 250	250	2002		AGPA29	
HUSABERG	TE 250	250	2011			AGPP80
HUSABERG	TE 250	250	2013			AGPP80
HUSABERG	WR 250	250	1997		AGPA29	
HUSABERG	TE 300	300	2011			AGPP80
HUSABERG	350	350	1991			AGPA98
HUSABERG	TE 350	350	1996		AGPA29	
HUSABERG	WR 360	360	1997		AGPA29	
HUSABERG	FE 390	393	2010			AGPP80
HUSABERG	FC 400	400	1999	2002	AGPA29	AGPP91
HUSABERG	FE 400 ,S,E	400	1999	2003		AGPP91
HUSABERG	FE 400 E	400	1999	2003	AGPA29	
HUSABERG	FS 400 E, C	400	2001	2003		AGPP91
HUSABERG	TE 400	400	2001		AGPA29	
HUSABERG	TE 410	410	1997		AGPA29	
HUSABERG	FS 400 E - C	450	2001	2003	AGPA75	
HUSABERG	FC 450	450	2003		AGPA29	AGPP91
HUSABERG	FS 450 E - C	450	2003	2005	AGPA75	AGPP91
HUSABERG	FX 450 E	450	2003			AGPP91
HUSABERG	FS 450 C	450	2006			AGPP91
HUSABERG	FS 450 c	450	2006	2008	AGPA231	
HUSABERG	FE 450	450	2009		AGPA29	AGPP80

PASTIGLIE BRAKE PADS

INDICE ANALITICO PASTIGLIE / pads alphabetical index

MARCA Brand	MODELLO Model	CC	DA From	A To	ANT. Front	POST. Rear
HUSABERG	TC 450	450	2002	2004	AGPA29	
HUSABERG	TE 450	450	2002		AGPA29	
HUSABERG	FX 450 E	450	2003		AGPA29	
HUSABERG	FE 450 / E	450	2004	2008	AGPA29	AGPP91
HUSABERG	FC 470 , E	470	2001	2002	AGPA29	AGPP91
HUSABERG	FX 470 / E	470	2001	2002	AGPA29	AGPP91
HUSABERG	500	500	1991			AGPA98
HUSABERG	501 ENDURO SI	501				AGPA98
HUSABERG	FC 501	501	1999	2001	AGPA29	AGPP91
HUSABERG	FE 501	501	2013			AGPP80
HUSABERG	FE 501 ,S,E	501	1999	2004		AGPP91
HUSABERG	FE 501 E	501	1999	2004	AGPA29	
HUSABERG	FE 501 e SM	501	2000		AGPA29	
HUSABERG	TC 510	510	2002	2004	AGPA29	
HUSABERG	TE 510	510	2002	2006	AGPA29	
HUSABERG	FC 550	550	2001		AGPA29	AGPP91
HUSABERG	FE 550 E	550	2004		AGPA29	AGPP91
HUSABERG	FE 570	565	2009			AGPP80
HUSABERG	TC 570	570	2001		AGPA29	
HUSABERG	TE 570	570	2001		AGPA29	
HUSABERG	FE 570	570	2009		AGPA29	
HUSABERG	FC 600	600	1999	2001		AGPP91
HUSABERG	FE 600 ,S,E	600	1999	2002		AGPP91
HUSABERG	FC 600	600	1994		AGPA29	
HUSABERG	FC 600	600	1999	2001	AGPA29	
HUSABERG	FE 600 E	600	1999	2002	AGPA29	
HUSABERG	FE 600 e SM	600	2000		AGPA29	
HUSABERG	600 ENDURO SI	600				AGPA98
HUSABERG	TC 610 Cross	610	1997		AGPA29	
HUSABERG	TE 610	610	1997		AGPA29	
HUSABERG	TE 610 E	610	2006		AGPA29	
HUSABERG	TE 630	630	2010		AGPA29	
HUSABERG	FE 650 E	650	2001			AGPP91
HUSABERG	FS 650 E - C	650	2001		AGPA75	AGPP91
HUSABERG	FX 650 E	650	2001			AGPP91
HUSABERG	FS 650 E, C	650	2006		AGPA231	AGPP91
HUSABERG	FE 650 E	650	2001		AGPA29	
HUSABERG	FX 650 E	650	2001		AGPA29	
HUSABERG	ALL MODELS		1993		AGPA29	
HUSABERG	ALL MODELS		1989	1993		AGPA98
HUSQVARNA						
HUSQVARNA	SM 50	50	2002		AGPA70	
HUSQVARNA	WR 50	50	2002		AGPA70	
HUSQVARNA	CR 50 JUNIOR	50	2006		AGPA47	
HUSQVARNA	CR 50 PRO SENIOR	50	2006		AGPA47	AGPA159
HUSQVARNA	CR 50 SENIOR	50	2006		AGPA47	AGPA159
HUSQVARNA	SM 50	50	2010		AGPA47	AGPA159
HUSQVARNA	HUSKY BOY J,R, S 50	50	2001		AGPA18	
HUSQVARNA	CR 65	65	2012		AGPA157	AGPP210
HUSQVARNA	TC 85	85	2014		AGPA211	AGPP210
HUSQVARNA	CX 125	125	1984	1985	AGPA31	
HUSQVARNA	CX 125	125	1984	1985	AGPA194	
HUSQVARNA	CR 125	125	1985	1990	AGPA31	
HUSQVARNA	CR 125	125	1985	1990	AGPA194	
HUSQVARNA	WRK 125	125	1990			AGPA98
HUSQVARNA	CR/WR 125	125	1991			AGPA98
HUSQVARNA	CR 125	125	1996	2004		AGPP91
HUSQVARNA	WR 125	125	1996	2013		AGPP91
HUSQVARNA	WRE 125	125	1996	2013		AGPP91
HUSQVARNA	SM 125 SUPERMOTARD, S	125	1999	2013		AGPP91

MARCA Brand	MODELLO Model	CC	DA From	A To	ANT. Front	POST. Rear
HUSQVARNA	CR 125	125	2005	2013		AGPP80
HUSQVARNA	SM 125 S	125	2009	2013		AGPP91
HUSQVARNA	SM 125 S 4T	125	2011	2013		AGPP91
HUSQVARNA	TE 125 4T	125	2011	2013		AGPP91
HUSQVARNA	TC 125	125	2014			AGPP80
HUSQVARNA	TE 125	125	2014			AGPP80
HUSQVARNA	200 PROF	200	1986		AGPA31	AGPA31
HUSQVARNA	CR 240	240	1984	1985	AGPA194	
HUSQVARNA	CR 240	240	1984	1985	AGPA31	
HUSQVARNA	WRK 240	240	1990			AGPA98
HUSQVARNA	WR 240	240	1991			AGPA98
HUSQVARNA	CX 250	250	1984	1985	AGPA31	
HUSQVARNA	CR 250	250	1985	1987	AGPA31	
HUSQVARNA	CR 250	250	1985	1987	AGPA194	
HUSQVARNA	CR 250	250	1991			AGPA98
HUSQVARNA	CR 250	250	1996	2004		AGPP91
HUSQVARNA	WR 250	250	1996	2013		AGPP91
HUSQVARNA	TC 250	250	2002	2003		AGPP91
HUSQVARNA	TE 250	250	2002	2013		AGPP91
HUSQVARNA	TC 250	250	2004	2014		AGPP80
HUSQVARNA	CR 250	250	2005			AGPP80
HUSQVARNA	TE 250 4T	250	2010	2013		AGPP80
HUSQVARNA	FC 250	250	2014			AGPP80
HUSQVARNA	FE 250	250	2014			AGPP80
HUSQVARNA	TE 250	250	2014			AGPP80
HUSQVARNA	XC 250	250		1985	AGPA194	
HUSQVARNA	WR 260	260	1990			AGPA98
HUSQVARNA	WR 300	300	2009	2013		AGPP80
HUSQVARNA	TC 300	300	2014			AGPP80
HUSQVARNA	TE 300	300	2014			AGPP80
HUSQVARNA	TE 310 4T	302	2010	2013		AGPP80
HUSQVARNA	TE 350 ENDURO	350	1990			AGPA98
HUSQVARNA	TE 350	350	1996	2013		AGPP91
HUSQVARNA	FC 350	350	2014			AGPP80
HUSQVARNA	FE 350	350	2014			AGPP80
HUSQVARNA	WR 360	360	1998	2013		AGPP91
HUSQVARNA	400 ENDURO	400	1985		AGPA31	
HUSQVARNA	WR 400 ENDURO	400	1985		AGPA194	
HUSQVARNA	TE 400	400	2001	2013		AGPP91
HUSQVARNA	SM 400 R	400	2002		AGPA32	AGPP91
HUSQVARNA	TE 410	410	1996	2013		AGPP91
HUSQVARNA	430 ENDURO	430	1985		AGPA31	
HUSQVARNA	430 ENDURO	430	1985		AGPA194	
HUSQVARNA	SMR 449	449	2011		AGPA112	AGPP80
HUSQVARNA	TC 449	449	2011	2013		AGPP80
HUSQVARNA	TE 449	449	2011	2013		AGPP80
HUSQVARNA	TC 450	450	2002	2003		AGPP91
HUSQVARNA	TE 450	450	2002	2010		AGPP91
HUSQVARNA	SM 450 R	450	2003	2004	AGPA32	
HUSQVARNA	SM 450 R	450	2003	2005		AGPP91
HUSQVARNA	TC 450	450	2004	2010		AGPP80
HUSQVARNA	SM 450 R	450	2005	2009	AGPA112	
HUSQVARNA	SM 450 R	450	2006	2009		AGPP80
HUSQVARNA	SM 450 RR	450	2006		AGPA112	
HUSQVARNA	SM 450 RR	450	2006			AGPP80
HUSQVARNA	FC 450	450	2014			AGPP80
HUSQVARNA	FE 450	450	2014			AGPP80
HUSQVARNA	TE 450	450	2014			AGPP80
HUSQVARNA	FS 450	450	2015		AGPA106	
HUSQVARNA	FS 450	450	2015			AGPP80
HUSQVARNA	CX/CR 500	500	1984	1985	AGPA31	
HUSQVARNA	XC 500	500	1985		AGPA194	

ACCOSSATO

PASTIGLIE BRAKE PADS

INDICE ANALITICO PASTIGLIE / pads alphabetical index

MARCA Brand	MODELLO Model	CC	DA From	A To	ANT. Front	POST. Rear
HUSQVARNA	CR 500	500	1986		AGPA31	
HUSQVARNA	CR 500	500	1986		AGPA194	
HUSQVARNA	TC 500	500	1986		AGPA31	
HUSQVARNA	TC 500	500	1986		AGPA194	
HUSQVARNA	FE 501	501	2014			AGPP80
HUSQVARNA	504	504	1983		AGPA194	
HUSQVARNA	504	504	1983		AGPA31	
HUSQVARNA	TE 510	510	1986	1987	AGPA31	
HUSQVARNA	TE 510	510	1986	1987	AGPA194	
HUSQVARNA	510	510	1990			AGPA98
HUSQVARNA	TC 510	510	2002	2003		AGPP91
HUSQVARNA	TE 510	510	2002	2010		AGPP91
HUSQVARNA	TC 510	510	2004	2010		AGPP80
HUSQVARNA	TE 510 CENTENNIAL	510	2004	2005		AGPP91
HUSQVARNA	SM 510 R	510	2005			AGPP91
HUSQVARNA	SM 510 R	510	2005	2006	AGPA112	
HUSQVARNA	SM 510 CENTENNIAL	510	2006			AGPP80
HUSQVARNA	SM 510 CENTENNIAL	510	2006		AGPA112	
HUSQVARNA	SM 510 R	510	2006			AGPP80
HUSQVARNA	SMR 511	511	2011		AGPA112	AGPP80
HUSQVARNA	TE 511	511	2011	2014		AGPP80
HUSQVARNA	570 NOX	570	2001	2003	AGPA96	AGPP91
HUSQVARNA	SM 570 R	570	2001		AGPA32	AGPP91
HUSQVARNA	TC 570	570	2001	2013		AGPP91
HUSQVARNA	TE 570	570	2001	2013		AGPP91
HUSQVARNA	TC 610 CROSS	610	1991			AGPA98
HUSQVARNA	TE 610	610	1991	1995		AGPA98
HUSQVARNA	TC 610	610	1996	2013		AGPP91
HUSQVARNA	TE 610 RALLYE	610	1996	2013		AGPP91
HUSQVARNA	SM 610 SUPER MOTARD, S	610	1998		AGPA96	AGPP91
HUSQVARNA	LT 610	610	2000			AGPP91
HUSQVARNA	LT 610	610	2000		AGPA96	
HUSQVARNA	SM 610 IE	610	2007		AGPA112	
HUSQVARNA	SM 610 IE	610	2007			AGPP80
HUSQVARNA	SMR 630	630	2004	2008	AGPA96	AGPP91
HUSQVARNA	SM 630	630	2010		AGPA112	AGPP80
HUSQVARNA	TE 630	630	2010	2014		AGPP80
HUSQVARNA	STR 650 CRC	650	2007		AGPA112	AGPP80
HUSQVARNA	TR 650 STRADA	650	2013		AGPA92	AGPP91
HUSQVARNA	TR 650 TERRA	650	2013		AGPA92	AGPP91
HUSQVARNA	SM 701	701	2015		AGPA112	AGPP91
HUSQVARNA	900 NUDA	900	2012		AGPA96	AGPP91
HUSQVARNA	900 NUDA R, ABS	900	2012		AGPA106	AGPP91
HUSQVARNA	ALL MODELS CR,TC,TE, WR		1992	1994	AGPA88	AGPA76
HYOSUNG						
HYOSUNG	GA-4 50	50	1999		AGPA74	
HYOSUNG	125 V2	125	1999		AGPA72	
HYOSUNG	XRX 125 Offroad	125	1999	2006	AGPA79	
HYOSUNG	125 AQUILA	125	2000		AGPA76	
HYOSUNG	RX 125	125	2000		AGPA79	
HYOSUNG	125 EXCEED	125	2002		AGPA13	AGPA79
HYOSUNG	125 Grand Prix Plus	125	2002		AGPA79	
HYOSUNG	GT 125 Comet	125	2002	2003	AGPA79	
HYOSUNG	GV 125 Aguila	125	2002	2004	AGPA79	
HYOSUNG	RT 125 Karion	125	2002	2006	AGPA79	
HYOSUNG	125 BOOMER	125	2003			AGPA79
HYOSUNG	GD 125 EXIV	125	2012			AGPA82
HYOSUNG	GD 125 EXIV	125	2012		AGPA105	
HYOSUNG	GRAND PRIX 125	125	1998		AGPA13	
HYOSUNG	HYPER 125	125	1999		AGPA13	
HYOSUNG	BOOMER 125	125	2003		AGPA13	
HYOSUNG	150 EXCEED	150	2002		AGPA13	AGPA79
HYOSUNG	GRAND PRIX 150	150	1998		AGPA13	
HYOSUNG	250 AQUILA	250	2000		AGPA72	
HYOSUNG	GT 250 COMET	250	2002		AGPA153	AGPA53
HYOSUNG	GT 250 COMET	250	2002			AGPP78
HYOSUNG	GD 250 EXIV-R	250	2015		AGPA105	AGPP31
HYOSUNG	GT 250 iR	250	2015		AGPA105	AGPP31
HYOSUNG	COMET 250	250	2002		AGPA13	
HYOSUNG	GA 300	300	1998		AGPA74	
HYOSUNG	GT 300 R	300	2016		AGPA105	
HYOSUNG	GV 300	300	2016		AGPA105	
HYOSUNG	TE 400	400	2005	2006	AGPA88	AGPP165
HYOSUNG	XRX 400	400	2005			AGPP90
HYOSUNG	TE 450	450	2007		AGPA88	AGPP165
HYOSUNG	RX 450 SM	450	2008		AGPA112	AGPP91
HYOSUNG	600 COMET	600	2002		AGPA153	AGPA53
HYOSUNG	GT 600 COMET	600	2002			AGPP78
HYOSUNG	GV 650 AGUILA	650	2004	2005		AGPP121
HYOSUNG	GT 650 I	650	2013		AGPA105	
HYOSUNG	GT 650 IR	650	2013	2015	AGPA105	
HYOSUNG	GT 650 I NAKED	650	2015		AGPA105	
HYOSUNG	GT 650 iR	650	2015			AGPP31
HYOSUNG	ST 700	700	2011		AGPA105	
HYOSUNG	ST 700 I DELUXE	700	2013		AGPA105	
INDIAN						
INDIAN	1700 CHIEF DELUXE	1700	2009	2013	AGPA32	AGPA141
INDIAN	1700 CHIEF ROADMASTER	1700	2009	2013	AGPA32	AGPA141
INDIAN	1700 CHIEF STANDARD	1700	2009	2013	AGPA32	AGPA141
INDIAN	1700 CHIEF VINTAGE	1700	2009	2013	AGPA32	AGPA141
INDIAN	1700 CHIEF BOMBER	1700	2010	2013	AGPA32	AGPA141
INDIAN	1700 CHIEF CLASSIC	1700	2010	2013	AGPA32	AGPA141
INDIAN	1700 CHIEF DARK HORSE	1700	2010	2013	AGPA32	AGPA141
INDIAN	1700 CHIEF BLACKHAWK	1700	2011	2013	AGPA32	AGPA141
INDIAN	1800 CHIEF CLASSIC	1800	2014		AGPA38	
INDIAN	1800 CHIEF VINTAGE	1800	2014		AGPA38	
INDIAN	1800 CHIEFTAIN	1800	2014		AGPA38	
INDIAN	1800 ROADMASTER	1800	2015		AGPA38	
ISR						
ISR	2 PISTON CALIPER (22-027/028/029) - ROAD/RACING 2				AGPA194	
ISR CALIPERS	2 PISTON (22-027/028/029)					
ISR CALIPERS	4 PISTON (22-025)					
ITALJET						
ITALJET	50 PISTA 2	50	1992		AGPA84	

PASTIGLIE BRAKE PADS

INDICE ANALITICO PASTIGLIE / pads alphabetical index

MARCA Brand	MODELLO Model	CC	DA From	A To	ANT. Front	POST. Rear
ITALJET	50 BAZOOKA	50	1993		AGPA84	
ITALJET	50 SCOOP	50	1993		AGPA84	
ITALJET	50 CRUISE	50	1995		AGPA84	
ITALJET	50 JET-SET	50	2002		AGPA49	
ITALJET	SM 50	50	2002		AGPA70	
ITALJET	FORMULA 50	50	1994	1996	AGPA27	AGPA13
ITALJET	50 ROLLERCRAFT	50	2008			AGPA23
ITALJET	FORMULA 80	80	1994		AGPA27	AGPA13
ITALJET	100 MILLENNIUM 2T	100	2001		AGPA49	
ITALJET	125 MILLENNIUM	125	2000		AGPA49	
ITALJET	125 JET-SET	125	2002		AGPA49	
ITALJET	SM 125	125	2002		AGPA70	
ITALJET	FORMULA 125	125	1994	1996	AGPA27	AGPA13
ITALJET	JUPITER 125	125	2002		AGPA22	AGPA24
ITALJET	125 TORPEDO	125	2008			AGPA23
ITALJET	150 MILLENNIUM	150	2000		AGPA49	
ITALJET	150 JET-SET	150	2002		AGPA49	
ITALJET	SX1 50	150	2008		AGPA222	
ITALJET	JUPITER 150	150	2002		AGPA22	AGPA24
ITALJET	150 TORPEDO	150	2008			AGPA23
ITALJET	250 JUPITER	250	2001		AGPA22	AGPA48
ITALJET	350	350	1983		AGPA31	
ITALJET	350 ROAD MASTER	350	1983		AGPA194	
ITALJET	900 GRIFFON	900	2000		AGPA32	AGPA194
ITALJET	YANKEE 8		1994			AGPA84
J.J. COBAS						
J. J. COBAS	TR1	250	1985		AGPA32	AGPA18
J. J. COBAS	TRIAL		1985		AGPA18	
JANSHE						
JANSHE	125 JS	125	2002		AGPA22	
JANSHE	125 JS 3	125	2002		AGPA22	
JAWA						
JAWA	CZ 125 2T	125			AGPA141	
JAWA	CZ 125 MX	125			AGPA141	
JAWA	CZ 180	180	1992		AGPA141	
JAWA	300 TRAIL	300	1993		AGPA141	
JAY BRAKE						
JAY BRAKE	4 PISTON CALIPER A4					
JAY BRAKE	2 PISTON CALIPER, SMALL					
JCM						
JCM	EUROPA 125	125	1989		AGPA18	AGPA18
JCM	OXYGENE 125	125	1989		AGPA16	
JCM	SR 125	125	1989		AGPA18	AGPA18
JCM	WEEK END 125	125	1989		AGPA16	
JCM	233 VEGA	233	1988		AGPA16	AGPA151
JCM	EUROPA 240	240	1989		AGPA18	AGPA18
JCM	OXYGENE 240	240	1989		AGPA16	
JCM	SR 240	240	1989		AGPA18	AGPA18
JCM	WEEK END 240	240	1989		AGPA16	
JCM	ENDURO 240	240	1991		AGPA16	
JCM	WEEK END 250	250	1991		AGPA16	
JCM	325 EUROPA	325	1989		AGPA18	AGPA151
JCM	OXYGENE 325	325	1989		AGPA16	
JCM	SR 325	325	1989		AGPA18	AGPA18
JCM	WEEK END 325	325	1989		AGPA16	
JCM	333 VEGA	333	1988		AGPA16	AGPA151
JCM	VEGA 333	333	1987		AGPA16	
JCM	TRIAL		1987		AGPA16	

MARCA Brand	MODELLO Model	CC	DA From	A To	ANT. Front	POST. Rear
JINCHENG						
JINCHENG	JC 125 2A/3A	125	1997		AGPA77	
JINCHENG	JC 125 7B	125	1997		AGPA221	
JINCHENG	JC 150 T-D	150	2006		AGPA22	
JINCHENG	JC 250	250	2006		AGPA80	
JOHN DEERE						
JOHN DEERE	500 BUCK EX, EXT LEFT/REAR	500	2005		AGPA113	AGPA115
JOHN DEERE	500 BUCK EX, EXT RIGHT	500	2005		AGPA115	
JOHN DEERE	500 BUCK LEFT/REAR	500	2005		AGPA113	AGPA115
JOHN DEERE	500 BUCK RIGHT	500	2005		AGPA115	
JOHN DEERE	500 TRAIL BUCK LEFT/REAR	500	2005		AGPA113	AGPA115
JOHN DEERE	500 TRAIL BUCK RIGHT	500	2005		AGPA115	
JOHN DEERE	650 TRAIL BUCK EX, EXT LEFT/REAR	650	2005		AGPA113	AGPA115
JOHN DEERE	650 TRAIL BUCK EX, EXT RIGHT	650	2005		AGPA115	
JOHN DEERE	650 TRAIL BUCK LEFT/REAR	650	2005		AGPA113	AGPA115
JOHN DEERE	650 TRAIL BUCK RIGHT	650	2005		AGPA115	
JONWAY						
JONWAY	YY 125	125	2008	2009	AGPA23	AGPA23
JONWAY	YY 150	150	2008	2009	AGPA23	AGPA23
JONWAY	YY 250	250	2008	2009	AGPA23	AGPA23
KAWASAKI						
KAWASAKI	AR 50	50	1981	1982	AGPA82	
KAWASAKI	KMX 50	50	1988		AGPA82	
KAWASAKI	KSR 50 I (50)	50	1990	1991	AGPA82	AGPA82
KAWASAKI	KX 65	65	2000		AGPA169	AGPA111
KAWASAKI	AR 80	80	1981		AGPA82	
KAWASAKI	KD 80 N1-N3	80	1988	1990	AGPA82	
KAWASAKI	KSR 80 II (80)	80	1990	1991	AGPA82	AGPA82
KAWASAKI	KX 80 E, G, H, J	80	1984	1987	AGPA82	
KAWASAKI	KX 80 L,N,R-R6	80	1988	1996	AGPA82	AGPA111
KAWASAKI	KX 80 R7, T7, W1, Y1, W2, Y2	80	1997	2000		AGPA111
KAWASAKI	KX 85	85	2001	2014		AGPA111
KAWASAKI	KX 85 II	85	2001	2013		AGPA111
KAWASAKI	KH 100 EX	100	1988		AGPA98	
KAWASAKI	KH 100 GH	100	1983		AGPA98	
KAWASAKI	KX 100	100	1988	1992	AGPA82	AGPA111
KAWASAKI	KX 100	100	1997	2014		AGPA111
KAWASAKI	KX 100 B5-B6	100	1995	1996	AGPA82	AGPA111
KAWASAKI	AR 125 A1, A1A, A7, LC	125	1982	1994	AGPA98	
KAWASAKI	BN 125 ELIMINATOR A1-A2	125	1998	1999	AGPA88	
KAWASAKI	BN 125 ELIMINATOR A3	125	2000		AGPA77	
KAWASAKI	KDX 125 A, B	125	1990	1994	AGPA82	AGPP99
KAWASAKI	KE 125	125	1986		AGPA98	
KAWASAKI	KH 125	125	1982	1998	AGPA98	
KAWASAKI	KLX 125	125	2010		AGPA76	AGPA88
KAWASAKI	KLX 125 D-TRACKER	125	2010		AGPA76	AGPA88

ACCOSSATO

PASTIGLIE BRAKE PADS

INDICE ANALITICO PASTIGLIE / pads alphabetical index

MARCA Brand	MODELLO Model	CC	DA From	A To	ANT. Front	POST. Rear
KAWASAKI	KMX 125	125	1986		AGPA82	
KAWASAKI	KMX 125	125	1986	2002		AGPA98
KAWASAKI	KX 125 B1	125	1982		AGPA82	
KAWASAKI	KX 125 B2, C1, D1	125	1983	1985	AGPA98	
KAWASAKI	KX 125 E1	125	1986		AGPA98	AGPA98
KAWASAKI	KX 125 E2, F1	125	1987	1988		AGPA98
KAWASAKI	KX 125 G,H,J	125	1989	1993	AGPA76	AGPP99
KAWASAKI	KX 125 K1	125	1994		AGPA51	AGPP99
KAWASAKI	KX 125 K2-M2	125	1995		AGPA51	AGPP90
KAWASAKI	ZL 125 ELIMINATOR	125	1997		AGPA82	
KAWASAKI	KLX 140 , L	140	2008		AGPA76	AGPA111
KAWASAKI	KDX 200 C	200	1986	1988	AGPA98	
KAWASAKI	KDX 200 E5	200	1991	1994	AGPA76	
KAWASAKI	KDX 200 E5	200	1993			AGPP99
KAWASAKI	KDX 200 E6, H1-H9	200	1994	1999	AGPA51	AGPP99
KAWASAKI	KDX 200 SR, E1-E4	200	1989	1992	AGPA98	AGPP99
KAWASAKI	KMX 200 A2, A3, A4	200	1988	1990	AGPA82	AGPA98
KAWASAKI	Z 200 A6	200	1983		AGPA98	
KAWASAKI	KDX 220 R A4	220	1997		AGPA51	AGPP99
KAWASAKI	250 ESTRELLA	250	1992		AGPA98	AGPA98
KAWASAKI	EL 250 ALL MODELS	250	1987	1994	AGPA74	
KAWASAKI	ER 250 (Z 250 T SCORPION)	250	1983	1988	AGPA74	
KAWASAKI	EX 250 NINJA	250	1986	1987	AGPA74	AGPA74
KAWASAKI	EX 250 R NINJA	250	2008	2012	AGPA77	AGPA77
KAWASAKI	EX 250 R NINJA F2-F17	250	1988	2007	AGPA153	
KAWASAKI	GPX 250 R	250	1988		AGPA153	
KAWASAKI	GPZ 250	250	1985			AGPA74
KAWASAKI	GPZ 250 BELT DRIVE	250	1983	1984	AGPA98	
KAWASAKI	KDX 250 SR, D1-D4	250	1991	1994	AGPA76	AGPP99
KAWASAKI	KL 250 D2-D14 (KLR 250)	250	1985	1997	AGPA98	
KAWASAKI	KL 250 SUPER SHERPA	250	2000			AGPA98
KAWASAKI	KLX 250	250	1998	2007	AGPA51	AGPP90
KAWASAKI	KLX 250 D1-D4, ES	250	1993	1996	AGPA51	AGPP99
KAWASAKI	KLX 250 S	250	2009		AGPA76	AGPP90
KAWASAKI	KLX 250 SF	250	2009		AGPA76	AGPP90
KAWASAKI	KR 250	250	1985		AGPA98	
KAWASAKI	KR-1 250 S	250	1990		AGPA75	
KAWASAKI	KSF 250 A1-A17 MOJAVE	250	1987			AGPA111
KAWASAKI	KX 250 B1	250	1982		AGPA82	
KAWASAKI	KX 250 C1,C2,D1	250	1983	1985	AGPA98	
KAWASAKI	KX 250 D2	250	1986			AGPA98
KAWASAKI	KX 250 E1, F1	250	1987	1988		AGPA98
KAWASAKI	KX 250 G1, H1-2,J1-2	250	1989	1993		AGPP99
KAWASAKI	KX 250 G1,H1-2, J1-2	250	1989	1993	AGPA76	
KAWASAKI	KX 250 K1	250	1994		AGPA51	AGPP99
KAWASAKI	KX 250 K2-M2	250	1995		AGPA51	AGPP90
KAWASAKI	KX-F 250	250	2004	2010	AGPA51	AGPP106
KAWASAKI	KXF 250 A1, A2 TECATE	250	1987	1988		AGPA111
KAWASAKI	KX-F 250 DFI	250	2011		AGPA51	AGPP106
KAWASAKI	KXT 250 A1 TECATE	250	1984			AGPA82
KAWASAKI	KXT 250 A2, B1 TECATE	250	1985	1986		AGPA98
KAWASAKI	KXT 250 B2 TECATE	250	1987			AGPA111
KAWASAKI	LX 250 ELIMINATOR - SE	250	1990		AGPA74	
KAWASAKI	SC 250 EPSILON	250	2002			AGPA41
KAWASAKI	SC 250 EPSILON	250	2002		AGPA21	AGPP73
KAWASAKI	Z 250	250	1978	1980		AGPA53
KAWASAKI	Z 250	250	1978	1980		AGPP78
KAWASAKI	Z 250	250	1983		AGPA74	
KAWASAKI	Z 250 GP BELT DRIVE	250	1983		AGPA74	
KAWASAKI	Z 250 J, A3	250	1981			AGPA53
KAWASAKI	Z 250 J/A3	250	1981			AGPP78
KAWASAKI	Z 250 T, SCORPION	250	1989		AGPA98	
KAWASAKI	ZR 250 BALIUS	250	1991	1995	AGPA153	AGPA98
KAWASAKI	ZZR 250	250	1990	2001	AGPA153	AGPA98
KAWASAKI	EL 252	252	1997	2000	AGPA74	
KAWASAKI	EL 252	252	2001		AGPA76	
KAWASAKI	EX 300 R NINJA, ABS	300	2013		AGPA77	AGPA77
KAWASAKI	J 300	300	2014		AGPA72	
KAWASAKI	KEF 300 LAKOTA	300	1995			AGPA111
KAWASAKI	KLF 300 B1-B13 BAYOU	300	1988		AGPA98	
KAWASAKI	KLF 300 C1-C17 BAYOU LEFT/REAR	300	1989	2005	AGPA76	
KAWASAKI	KLF 300 C1-C17 BAYOU RIGHT	300	1989	2005	AGPA77	
KAWASAKI	KLX 300 R A2	300	1997		AGPA51	AGPP90
KAWASAKI	KVF 300 BRUTE FORCE	300	2013		AGPA88	AGPA173
KAWASAKI	Z 300	300	2015		AGPA77	AGPA77
KAWASAKI	GPZ 305	305	1981	1996	AGPA98	
KAWASAKI	KLR 350	350	1985		AGPA98	
KAWASAKI	KVF 360 PRAIRIE 2X4, 4X4	360	2003		AGPA88	
KAWASAKI	400 ELIMINATOR	400	1994		AGPA153	
KAWASAKI	400 NINJA R LEFT/REAR	400	2011		AGPA95	AGPP102
KAWASAKI	400 NINJA R RIGHT	400	2011		AGPA94	
KAWASAKI	EX-4 400	400	1995		AGPA153	AGPA98
KAWASAKI	FX 400 R	400	1986	1988	AGPA98	
KAWASAKI	GPX 400	400	1987			AGPA153
KAWASAKI	GPZ 400	400	1985			AGPA74
KAWASAKI	GPZ 400	400	1985	1987	AGPA98	
KAWASAKI	GPZ 400 R	400	1989			AGPA153
KAWASAKI	GPZ 400 S	400	1988		AGPA153	
KAWASAKI	KFX 400	400	2002		AGPA111	
KAWASAKI	KFX 400	400	2002			AGPP165
KAWASAKI	KLE 400	400	1991		AGPA153	AGPA98
KAWASAKI	KLE 400 VULCAN	400	1990		AGPA74	
KAWASAKI	KLF 400 B1-B7 BAYOU LEFT	400	1993	1999	AGPA76	

PASTIGLIE BRAKE PADS

INDICE ANALITICO PASTIGLIE / pads alphabetical index

MARCA Brand	MODELLO Model	CC	DA From	A To	ANT. Front	POST. Rear
KAWASAKI	KLF 400 B1-B7 BAYOU RIGHT	400	1993	1999	AGPA77	
KAWASAKI	KLX 400 R	400	2003		AGPA51	AGPP90
KAWASAKI	KLX 400 SR	400	2003		AGPA51	AGPP90
KAWASAKI	KVF 400 A1, A2, B1 PRAIRIE	400	1997	1998	AGPA88	
KAWASAKI	KVF 400 C1, C2 PRAIRIE 4X4	400	1999		AGPA88	
KAWASAKI	KVF 400 D1, D2 PRAIRIE 2X4	400	1999		AGPA88	
KAWASAKI	LX 400 ELIMINATOR, SE	400	1990		AGPA98	
KAWASAKI	VN 400 VULCAN	400	1995		AGPA74	
KAWASAKI	Z 400 F	400	1984		AGPA98	
KAWASAKI	Z 400 F2	400	1985			AGPA74
KAWASAKI	ZL 400	400	1986	1987	AGPA74	
KAWASAKI	ZL 400 ELIMINATOR	400	1993			AGPA74
KAWASAKI	ZL 400 ELIMINATOR	400	1988	1992	AGPA74	AGPA74
KAWASAKI	ZR 400 F, A1	400	1983	1984	AGPA98	
KAWASAKI	ZR 400 XANTHUS (ZR 400D1)	400	1992			AGPA98
KAWASAKI	ZX 400	400	1985		AGPA98	
KAWASAKI	ZX 400 C2	400	1985			AGPA74
KAWASAKI	ZX-4 400	400	1990		AGPA75	AGPP78
KAWASAKI	ZX-4 400 90 LS	400	1990			AGPA53
KAWASAKI	ZXR 400	400	1989	1990	AGPA75	AGPA53
KAWASAKI	ZXR 400	400	1989	1990		AGPP78
KAWASAKI	ZXR 400 L1 / L2 / L3 / L4 / L5	400	1991	2002	AGPA201	AGPP78
KAWASAKI	ZXR 400 L1-L9	400	1991	2002		AGPA53
KAWASAKI	ZZR 400	400	1990	1994	AGPA75	AGPA153
KAWASAKI	KFX 450 LEFT/ REAR	450	2007			AGPA111
KAWASAKI	KLX 450 R	450	2007		AGPA51	AGPP106
KAWASAKI	KX-F 450	450	2006	2008	AGPA51	AGPP106
KAWASAKI	KX-F 450 DFI	450	2009		AGPA51	AGPP106
KAWASAKI	Z 454 LTD LIQUID COOLED	454	1986	1989	AGPA74	
KAWASAKI	EN 500 ALL MODELS	500	1990	2004	AGPA74	
KAWASAKI	ER-5 500	500	1997	2000	AGPA153	
KAWASAKI	ER-5 500	500	2001		AGPA95	
KAWASAKI	EX 500 A1-A3	500	1987	1989	AGPA153	
KAWASAKI	EX 500 A4-A7	500	1990	1993	AGPA153	
KAWASAKI	EX 500 D1-D3 NINJA	500	1994	1997	AGPA153	AGPA98
KAWASAKI	EX 500 E1-E3	500	1994	1996		AGPA98
KAWASAKI	GPX 500 R (AUSTRIA)	500	1988		AGPA153	AGPA153
KAWASAKI	GPZ 500	500	1993	1995	AGPA75	
KAWASAKI	GPZ 500	500	1995	1996	AGPA98	AGPA98
KAWASAKI	GPZ 500	500	1997			AGPA98
KAWASAKI	GPZ 500 S	500	1988	1992	AGPA98	
KAWASAKI	GPZ 500 S	500	1987		AGPA74	
KAWASAKI	GPZ 500 S	500	1988		AGPA98	
KAWASAKI	GPZ 500 S	500	1989	1992		AGPA74
KAWASAKI	GPZ 500 S (AUSTRIA)	500	1987	1993	AGPA153	
KAWASAKI	GPZ 500 S (AUSTRIA)	500	1994	1997		AGPA98

MARCA Brand	MODELLO Model	CC	DA From	A To	ANT. Front	POST. Rear
KAWASAKI	KL 500 TENGAI (AUSTRIA)	500	1989	1991	AGPA153	AGPA98
KAWASAKI	KLE 500 A1	500	1991		AGPA153	AGPA98
KAWASAKI	KLR 500 (AUSTRIA)	500	1987	1988		AGPA98
KAWASAKI	KX 500 A1,2,B1	500	1983	1985	AGPA98	
KAWASAKI	KX 500 B2	500	1986		AGPA98	AGPA98
KAWASAKI	KX 500 C1, D1	500	1987	1988		AGPA98
KAWASAKI	KX 500 E1-E5	500	1989	1993	AGPA76	AGPP99
KAWASAKI	KX 500 E6-E7	500	1994	1995	AGPA51	AGPP99
KAWASAKI	KX 500 E8	500	1996		AGPA51	AGPP90
KAWASAKI	ZZR 500 (AUSTRIA)	500	1993			AGPP102
KAWASAKI	ZZR 500 (AUSTRIA)	500	1990	1992		AGPA153
KAWASAKI	ZZR 500 (AUSTRIA)	500	1990	1993	AGPA75	
KAWASAKI	KX 550 A	550	1983		AGPA98	
KAWASAKI	Z 550 F	550	1983		AGPA98	
KAWASAKI	Z 550 GP	550	1984		AGPA74	AGPA74
KAWASAKI	Z 550 GT	550	1983		AGPA98	
KAWASAKI	ZR 550 A1, GP	550	1983	1984	AGPA98	
KAWASAKI	ZR 550 B1-B3 ZEPHYR	550	1990	1992	AGPA153	
KAWASAKI	ZR 550 B4-B6 ZEPHYR	550	1993	1999	AGPA153	AGPP102
KAWASAKI	ZR 550 ZEPHYR (GERMANY) FR.NO. B024010- 93- LS	550	1993			AGPP102
KAWASAKI	ZX 6RR 600 NINJA (Rad.cal)	600	2003	2006	AGPA37	
KAWASAKI	600 R, NINJA	600	1989		AGPA75	AGPA53
KAWASAKI	6R 600 NINJA	600	1998	2001	AGPA73	
KAWASAKI	EN 600 R NINJA	600	1989			AGPP78
KAWASAKI	GPX 600 R	600	1988	1994	AGPA153	AGPA153
KAWASAKI	GPZ 600 R	600	1994		AGPA153	AGPA153
KAWASAKI	GPZ 600 R	600	1985		AGPA74	AGPA74
KAWASAKI	KL 600 A1,B1,B2	600	1984	1986	AGPA98	
KAWASAKI	KLR 600	600	1984	1986	AGPA98	
KAWASAKI	KLR 600 E	600	1985	1994	AGPA98	
KAWASAKI	ZL 600 A1/A2	600	1985	1994	AGPA74	
KAWASAKI	ZL 600 B2 ELIMINATOR	600	1995	1998	AGPA153	
KAWASAKI	ZX 600 C1-C10 NINJA R	600	1988	1997	AGPA153	AGPA153
KAWASAKI	ZX-6R 30TH ANNIVERDASARY EDITION (ZX 636 EFFA/ NON ABS/636cc)	600	2015			AGPP39
KAWASAKI	ZX-6R 30TH ANNIVERDASARY EDITION (ZX 636 FFFA/ABS/636cc)	600	2015			AGPP39
KAWASAKI	ZX-6R 600 D1-D4 (ZX6)	600	1990	1993	AGPA75	AGPA153
KAWASAKI	ZX-6R 600 E1-E5 (NINJA ZX6)	600	1993	1997	AGPA75	AGPP102
KAWASAKI	ZX-6R 600 F1-F3 (NINJA ZX6R)	600	1995	1997	AGPA75	AGPP102
KAWASAKI	ZX-6R 600 NINJA	600	1998	2001		AGPP102
KAWASAKI	ZX-6R 600 NINJA (RAD.CAL)	600	2007	2012	AGPA107	AGPP102

ACCOSSATO

PASTIGLIE BRAKE PADS

INDICE ANALITICO PASTIGLIE / pads alphabetical index

MARCA Brand	MODELLO Model	CC	DA From	A To	ANT. Front	POST. Rear
KAWASAKI	ZX-6R EDF/ EEF/EFF (NON ABS/636cc)	600	2013	2015		AGPP39
KAWASAKI	ZX-6R FDF/ FEF/FFF (ABS MODEL/636cc)	600	2013	2015		AGPP39
KAWASAKI	ZX-6RR 600 NINJA (RAD.CAL)	600	2003	2006		AGPP102
KAWASAKI	ZZR 600	600	1990	1992		AGPA153
KAWASAKI	ZZR 600	600	1990	2005	AGPA75	
KAWASAKI	ZZR 600	600	1993	2005		AGPP102
KAWASAKI	ZX 6R 636 NINJA (Rad.cal)	636	2003	2006	AGPA37	
KAWASAKI	ZX-6R 636 NINJA	636	2002		AGPA73	AGPP102
KAWASAKI	ZX-6R 636 NINJA (RAD.CAL)	636	2003	2006		AGPP102
KAWASAKI	ER-6F 650 LEFT/REAR	650	2006	2012	AGPA95	AGPP102
KAWASAKI	ER-6F 650 RIGHT	650	2006	2012	AGPA94	
KAWASAKI	ER-6N 650 LEFT/REAR	650	2006	2012	AGPA95	AGPP102
KAWASAKI	ER-6N 650 RIGHT	650	2006	2012	AGPA94	
KAWASAKI	KLE 650 VERSYS LEFT/REAR	650	2007	2014	AGPA95	AGPP102
KAWASAKI	KLE 650 VERSYS RIGHT	650	2007	2014	AGPA94	
KAWASAKI	KLR 650 A1-A19, A6F-A7F	650	1987	2007		AGPA98
KAWASAKI	KLR 650 B1-B3 TENGAI	650	1989	1991	AGPA153	AGPA98
KAWASAKI	KLR 650 C1-C4	650	1995	1998	AGPA95	AGPA98
KAWASAKI	KLR 650 C5-C10	650	1999	2004	AGPA95	AGPA98
KAWASAKI	KLR 650 E8F	650	2008		AGPA76	AGPA77
KAWASAKI	KLX 650 A1-3, C1-4	650	1993	1996	AGPA51	AGPP99
KAWASAKI	KLX 650 R	650	1993	1995	AGPA51	AGPP99
KAWASAKI	KLX 650 R D1	650	1996		AGPA51	AGPP90
KAWASAKI	KVF 650 BRUTE FORCE 4X4I (F_, G_, H_) LEFT	650	2005		AGPA76	
KAWASAKI	KVF 650 BRUTE FORCE 4X4I (F_, G_, H_) RIGHT	650	2005		AGPA77	
KAWASAKI	W 650	650	1999		AGPA94	
KAWASAKI	VN 700 A2-A10	700	1986	1994	AGPA74	
KAWASAKI	VN 700 VULCAN	700	1985		AGPA74	
KAWASAKI	750 BELT DRIVE	750	1985		AGPA74	AGPA74
KAWASAKI	750 TURBO	750	1985		AGPA74	AGPA74
KAWASAKI	750 VULCAN	750	1989	1993	AGPA74	
KAWASAKI	GPX 750 R	750	1987	1989	AGPA153	AGPA153
KAWASAKI	GPZ 750	750	1985	1986	AGPA74	AGPA74
KAWASAKI	GPZ 750 R1	750	1985	1987	AGPA74	AGPA74
KAWASAKI	GT 750	750	1985		AGPA74	AGPA74
KAWASAKI	KRF 750 TERYX 4X4 LEFT	750	2008		AGPA76	
KAWASAKI	KRF 750 TERYX 4X4 RIGHT	750	2008		AGPA77	
KAWASAKI	KVF 750 BRUTE FORCE 4X4I (A_, B_, C_,D_, E_, F_) LEFT	750	2005		AGPA76	
KAWASAKI	KVF 750 BRUTE FORCE 4X4I (A_, B_, C_,D_, E_, F_) RIGHT	750	2005		AGPA77	
KAWASAKI	VN 750	750	1988		AGPA74	AGPA74
KAWASAKI	VN 750 TWIN	750	1986		AGPA74	
KAWASAKI	VN 750 VULCAN	750	1990		AGPA74	
KAWASAKI	Z 750 , ABS	750	2007		AGPA72	AGPP88
KAWASAKI	Z 750 GP	750	1983		AGPA74	AGPA74
KAWASAKI	Z 750 LEFT/REAR	750	2004	2006	AGPA95	AGPP102
KAWASAKI	Z 750 LTD TWIN K1	750	1983		AGPA74	
KAWASAKI	Z 750 R	750	2011		AGPA107	AGPP185
KAWASAKI	Z 750 RIGHT	750	2004	2006	AGPA94	
KAWASAKI	Z 750 S LEFT/ REAR	750	2005	2006	AGPA95	AGPP102
KAWASAKI	Z 750 S RIGHT	750	2005	2006	AGPA94	
KAWASAKI	ZR 750 ZEPHYR	750	1991	1995	AGPA153	AGPA153
KAWASAKI	ZR 750 ZEPHYR LEFT/REAR	750	1996		AGPA95	AGPA153
KAWASAKI	ZR 750 ZEPHYR RIGHT	750	1996		AGPA94	
KAWASAKI	ZR-7 750 LEFT/REAR	750	1999		AGPA95	AGPA94
KAWASAKI	ZR-7 750 RIGHT	750	1999		AGPA94	
KAWASAKI	ZR-7S 750 LEFT/REAR	750	2001		AGPA95	AGPA94
KAWASAKI	ZR-7S 750 RIGHT	750	2001		AGPA94	
KAWASAKI	ZX 750 A1	750	1983		AGPA74	AGPA74
KAWASAKI	ZX 750 E1 TURBO	750	1983		AGPA74	AGPA74
KAWASAKI	ZX-7R 750 NINJA	750	1996	2003	AGPA73	
KAWASAKI	ZX-7R 750 NINJA	750	1989	1995	AGPA75	AGPA53
KAWASAKI	ZX7-R 750 NINJA	750	1989	2002		AGPP78
KAWASAKI	ZX-7R 750 NINJA P1-P8	750	1996	2003		AGPA53
KAWASAKI	ZX-7RR 750 NINJA N1	750	1996	2002	AGPA124	AGPP143
KAWASAKI	ZXR 750 R	750	1989	1995	AGPA75	AGPA53
KAWASAKI	ZXR 750 R	750	1989	1995		AGPP78
KAWASAKI	KRF 800 TERYX BEF/ CEF/DEF LEFT	800	2014		AGPA76	
KAWASAKI	KRF 800 TERYX BEF/CEF/DEF RIGHT	800	2014		AGPA77	
KAWASAKI	KRT 800 TERYX 4 BEF/ CEF/DEF LEFT	800	2014		AGPA76	
KAWASAKI	KRT 800 TERYX 4 BEF/CEF/DEF RIGHT	800	2014		AGPA77	
KAWASAKI	VN 800	800	1995	1998	AGPA74	
KAWASAKI	VN 800 CLASSIC	800	1998		AGPA95	
KAWASAKI	VN 800 DRIFTER	800	1999	2002	AGPA95	AGPA94
KAWASAKI	W 800	800	2011		AGPA94	
KAWASAKI	Z 800	800	2013	2014	AGPA38	
KAWASAKI	Z 800	800	2013			AGPP185
KAWASAKI	Z 800	800	2015		AGPA72	
KAWASAKI	Z 800 e	800	2013			AGPP185
KAWASAKI	Z 800 E	800	2015		AGPA72	
KAWASAKI	Z 800 E ABS	800	2013	2014	AGPA38	
KAWASAKI	VN 850	850	1995		AGPA74	
KAWASAKI	GPZ 900	900	1985		AGPA74	AGPA74
KAWASAKI	GPZ 900 R	900	1990	1996	AGPA75	AGPA153
KAWASAKI	GPZ 900 R NINJA	900	1984	1989	AGPA74	AGPA74
KAWASAKI	VN 900 CLASSIC	900	2006		AGPA95	
KAWASAKI	VN 900 CUSTOM	900	2007		AGPA95	

PASTIGLIE BRAKE PADS

INDICE ANALITICO PASTIGLIE / pads alphabetical index

MARCA Brand	MODELLO Model	CC	DA From	A To	ANT. Front	POST. Rear
KAWASAKI	Z 900 Z1A - Z1B	900	1974	1976	AGPA74	
KAWASAKI	ZX-9R 900 NINJA	900	1994	1995	AGPA75	
KAWASAKI	ZX-9R 900 NINJA	900	1996		AGPA73	
KAWASAKI	ZX-9R 900 NINJA	900	1994	2002		AGPP102
KAWASAKI	ZX-9R 900 NINJA	900	1997	2001	AGPA73	
KAWASAKI	ZX-9R 900 NINJA	900	2002		AGPA38	
KAWASAKI	1000 H2 NINJA	1000	2015		AGPA106	AGPA42
KAWASAKI	1000 H2R NINJA	1000	2015		AGPA106	AGPA42
KAWASAKI	1000 VERSYS	1000	2012	2015	AGPA75	AGPP88
KAWASAKI	1000 VERSYS LT	1000	2015		AGPA75	AGPP88
KAWASAKI	GPZ 1000 RX - RY	1000	1986		AGPA74	AGPA74
KAWASAKI	GTR 1000	1000	1994	2006	AGPA153	
KAWASAKI	GTR 1000	1000	1986	1993	AGPA74	AGPA74
KAWASAKI	KLV 1000 LEFT/REAR	1000	2004		AGPA95	AGPP88
KAWASAKI	KLV 1000 RIGHT	1000	2004		AGPA94	
KAWASAKI	VN 1000 VULCAN	1000	1987		AGPA74	AGPA74
KAWASAKI	Z 1000	1000	2003	2006	AGPA38	AGPP102
KAWASAKI	Z 1000	1000	2007	2009	AGPA107	AGPP88
KAWASAKI	Z 1000 (RAD.CAL)	1000	2010	2014	AGPA109	
KAWASAKI	Z 1000 (RAD.CAL)	1000	2010	2013		AGPP88
KAWASAKI	Z 1000 (RAD.CAL)	1000	2014			AGPP102
KAWASAKI	Z 1000 GTR	1000	1994			AGPA74
KAWASAKI	Z 1000 GTR (ZG 1000)	1000	1986	1993	AGPA74	AGPA74
KAWASAKI	Z 1000 SE (RAD.CAL)	1000	2014		AGPA109	AGPP102
KAWASAKI	Z 1000 SX (RAD.CAL)	1000	2011	2014	AGPA109	AGPP102
KAWASAKI	ZL 1000 ALL MODELS	1000	1987		AGPA74	AGPA74
KAWASAKI	ZX 10 R (ZX 1000 JBF/JCF/ JDF/JEF/JFF)	1000	2011	2015		AGPP39
KAWASAKI	ZX 10 R ABS (ZX 1000 KBF/KCF/ KDF/KEF/KFF)	1000	2011	2015		AGPP39
KAWASAKI	ZX 10R 1000 NINJA (Rad.cal)	1000	2004	2007	AGPA37	
KAWASAKI	ZX-10 1000 B2, B3	1000	1988	1990	AGPA153	AGPA153
KAWASAKI	ZX-10R 1000 NINJA (RAD.CAL)	1000	2004	2010		AGPP102
KAWASAKI	ZX-10R 1000 NINJA (RAD.CAL)	1000	2008	2011	AGPA109	
KAWASAKI	ZX-10R 30Th ANNIVERSARY EDITION (ZX 1000 JFFA/NON ABS)	1000	2015			AGPP39
KAWASAKI	ZX-10R 30Th ANNIVERSARY EDITION (ZX 1000 KFFA/ABS)	1000	2015			AGPP39
KAWASAKI	1100 ZEPHYR LEFT/REAR	1100	1997		AGPA95	AGPA153
KAWASAKI	1100 ZEPHYR RIGHT	1100	1997		AGPA94	
KAWASAKI	GPX 1100 (ZX 1100 A1)	1100	1983		AGPA74	AGPA74
KAWASAKI	GPZ 1100 (ZX 1100 E1-E2) LEFT/REAR	1100	1995	1996	AGPA95	AGPP102
KAWASAKI	GPZ 1100 (ZX 1100 E1-E2) RIGHT	1100	1995	1996	AGPA94	
KAWASAKI	GPZ 1100 ABS, LEFT/REAR HORIZONT	1100	1997		AGPA95	
KAWASAKI	GPZ 1100 ABS, HORIZONT LEFT/REAR	1100	1997			AGPP102
KAWASAKI	GPZ 1100 ABS, HORIZONT RIGHT	1100	1997		AGPA94	
KAWASAKI	VN 1100	1100	1987		AGPA74	AGPA74
KAWASAKI	Z 1100 R1	1100	1984		AGPA74	AGPA74
KAWASAKI	ZR 1100 ZEPHYR	1100	1992	1995	AGPA75	AGPA153
KAWASAKI	ZRX 1100	1100	1996	2000	AGPA73	AGPA53
KAWASAKI	ZRX 1100	1100	1996	2000		AGPP78
KAWASAKI	ZX 1100 A1	1100	1983	1984	AGPA74	AGPA74
KAWASAKI	ZX 1100 D1-D4 ZX 11	1100	1993	1997		AGPP78
KAWASAKI	ZX 1100 D1-D5 ZX-11	1100	1993	1997	AGPA75	AGPA53
KAWASAKI	ZZR 1100	1100	1990	1993		AGPA153
KAWASAKI	ZZR 1100	1100	1990	2001	AGPA75	
KAWASAKI	ZZR 1100	1100	1994	2001		AGPA53
KAWASAKI	ZZR 1100	1100	1994	2001		AGPP78
KAWASAKI	KZ 1200	1200	1987		AGPA74	AGPA74
KAWASAKI	ZG 1200	1200	1986	1990	AGPA74	AGPA74
KAWASAKI	ZG 1200 VOYAGER	1200	1986		AGPA74	AGPA74
KAWASAKI	ZRX 1200	1200	2001		AGPA73	AGPA53
KAWASAKI	ZRX 1200 / S / R	1200	2001	2008		AGPP78
KAWASAKI	ZRX 1200 R	1200	2001		AGPA73	AGPA53
KAWASAKI	ZRX 1200 S	1200	2001		AGPA73	AGPA53
KAWASAKI	ZX 12R 1200 NINJA (Rad.cal)	1200	2004		AGPA37	
KAWASAKI	ZX12-R 1200 NINJA	1200	2000	2003	AGPA73	AGPP78
KAWASAKI	ZX-12R 1200 NINJA	1200	2000	2003		AGPA53
KAWASAKI	ZX12-R 1200 NINJA (RAD.CAL)	1200	2004			AGPP78
KAWASAKI	ZX-12R 1200 NINJA (RAD.CAL)	1200	2004			AGPA53
KAWASAKI	ZZR 1200	1200	2002		AGPA75	AGPA53
KAWASAKI	ZZR 1200	1200	2002			AGPP78
KAWASAKI	GTR 1400 (RAD.CAL)	1400	2007		AGPA107	AGPP143
KAWASAKI	ZZR 1400 (RAD.CAL)	1400	2006		AGPA107	AGPP143
KAWASAKI	VN 1500 ALL MODELS	1500	1987	1993	AGPA74	AGPA74
KAWASAKI	VN 1500 CLASSIC	1500	1997		AGPA95	
KAWASAKI	VN 1500 CLASSIC FI	1500	2000		AGPA95	
KAWASAKI	VN 1500 CLASSIC TOURER (PINZA DX)	1500	1998			AGPA74
KAWASAKI	VN 1500 CLASSIC TOURER F1 (PINZA DX)	1500	2000	2002		AGPA74
KAWASAKI	VN 1500 CLASSIC TOURER FI LEFT/ REAR	1500	2000		AGPA95	
KAWASAKI	VN 1500 CLASSIC TOURER FI RIGHT	1500	2000		AGPA94	

ACCOSSATO

PASTIGLIE BRAKE PADS

INDICE ANALITICO PASTIGLIE / pads alphabetical index

MARCA Brand	MODELLO Model	CC	DA From	A To	ANT. Front	POST. Rear
KAWASAKI	VN 1500 CLASSIC TOURER LEFT/REAR	1500	1998		AGPA95	
KAWASAKI	VN 1500 CLASSIC TOURER RIGHT	1500	1998		AGPA94	
KAWASAKI	VN 1500 D1/D2 CLASSIC	1500	1996	1998		AGPA74
KAWASAKI	VN 1500 DRIFTER	1500	1999	2002	AGPA95	AGPA94
KAWASAKI	VN 1500 MEAN STREAK	1500	2002	2003	AGPA73	
KAWASAKI	VN 1500 SUMO	1500	1988		AGPA74	AGPA74
KAWASAKI	VN 1600 CLASSIC (PINZA DX)	1600	2003	2008		AGPA74
KAWASAKI	VN 1600 CLASSIC LEFT/REAR	1600	2003		AGPA95	
KAWASAKI	VN 1600 CLASSIC RIGHT	1600	2003		AGPA94	
KAWASAKI	VN 1600 MEAN STREAK	1600	2004		AGPA73	
KAWASAKI	VN 1600 MEAN STREAK	1600	2005		AGPA37	
KAWASAKI	VN 1700 CLASSIC	1700	2009		AGPA94	
KAWASAKI	VN 1700 CLASSIC (PINZA DX)	1700	2009			AGPA74
KAWASAKI	VN 1700 CLASSIC LEFT/REAR	1700	2009		AGPA95	
KAWASAKI	VN 1700 CLASSIC RIGHT	1700	2009		AGPA94	
KAWASAKI	VN 1700 CLASSIC TOURER (PINZA DX)	1700	2009			AGPA74
KAWASAKI	VN 1700 CLASSIC TOURER LEFT/REAR	1700	2009		AGPA95	
KAWASAKI	VN 1700 VOYAGER	1700	2009		AGPA75	
KAWASAKI	VN 2000	2000	2004		AGPA75	
KAWASAKI	P1-P8				AGPA73	
KAWASAKI	TOURER RIGHT		2009		AGPA94	
KEEWAY						
KEEWAY	50 Flash Electric	50	2010		AGPA222	
KEEWAY	50 Focus	50	2006		AGPA222	
KEEWAY	50 Matrix	50	2006		AGPA222	
KEEWAY	50 Matrix Electric	50	2010		AGPA222	
KEEWAY	50 Matrix Racing Sport	50	2010		AGPA222	
KEEWAY	F-NKD 50	50	2010		AGPA222	
KEEWAY	RY8 50	50	2007	2009	AGPA222	
KEEWAY	RY8 50	50	2010		AGPA222	
KEEWAY	TX 50 SM	50	2010		AGPA48	
KEEWAY	100 PARTNER	100	2006		AGPA23	
KEEWAY	110 PARTNER	110	2006		AGPA23	
KEEWAY	125 ARN	125	2006		AGPA13	
KEEWAY	125 ENDURO	125	2007			AGPA194
KEEWAY	125 Focus	125	2006		AGPA222	
KEEWAY	125 Matrix	125	2006		AGPA222	
KEEWAY	125 Matrix Racing Sport	125	2010		AGPA222	
KEEWAY	125 SPEED	125	2006			AGPA23
KEEWAY	125 SUPERLIGHT	125	2006		AGPA80	
KEEWAY	125 X-RAY	125	2007			AGPA194
KEEWAY	ENDURO 125	125	2007			AGPA31
KEEWAY	TX 125 SM	125	2010		AGPA48	
KEEWAY	X-RAY 125	125	2007			AGPA31
KEEWAY	150 ARN	150	2006		AGPA13	
KEEWAY	150 Focus	150	2006		AGPA222	
KEEWAY	150 Matrix	150	2006		AGPA222	
KEEWAY	150 Matrix Racing Sport	150	2010		AGPA222	
KEEWAY	150 SPEED	150	2006			AGPA23
KEEWAY	150 SUPERLIGHT	150	2006		AGPA80	
KEEWAY	250 LAND CRUISER	250	2006		AGPA80	
KEEWAY	250 SUPERSHADOW	250	2006		AGPA22	
KRAM IT						
KRAM IT	50 SCRAMBLER HF	50	1950			AGPA98
KRAM IT	ER 125	125	1989	1993		AGPA98
KRAM IT	250 SMR	250	2000			AGPP91
KRAM IT	GS 250	250	1997		AGPA29	
KRAM IT	GS 250	250	1997			AGPP91
KRAM IT	MC 250	250	1989			AGPA98
KRAM IT	MX 250	250	1997		AGPA29	
KRAM IT	MX 250	250	1997			AGPP91
KRAM IT	SM 250	250	2000		AGPA29	
KRAM IT	SM 250	250	1997			AGPP91
KRAM IT	ER 300	300	1989			AGPA98
KREIDLER						
KREIDLER	25 FLORETT XL		1999		AGPA83	
KREIDLER	50 FLORETT	50	1999		AGPA83	
KREIDLER	125 ENDURO	125	2007		AGPA80	
KREIDLER	125 FLORETT D	125	2007		AGPA77	
KREIDLER	125 FLORETT RMC-F	125	2007		AGPA77	
KREIDLER	125 SUPERMOTO	125	2007		AGPA80	
KREIDLER	MUSTANG 125	125	1983		AGPA31	
KREIDLER	200 ENDURO	200	2007		AGPA80	
KTM						
KTM	COMET 50 PL, TS, RLW, RS, RS4L	50	1986	1991	AGPA31	
KTM	GO 50 SCOOTER	50	1994		AGPA15	
KTM	GP 50 DXL, RS1	50			AGPA31	
KTM	GXE 50	50	1987		AGPA31	
KTM	GXE 50	50	1987		AGPA194	
KTM	GXE 50	50	1989		AGPA194	
KTM	GXR 50	50	1989		AGPA194	
KTM	MX 50	50	1987		AGPA31	
KTM	MX 50	50	1987	1991	AGPA194	
KTM	MX 50	50	1991		AGPA194	
KTM	RSV 50	50	1986		AGPA31	
KTM	RSV 50	50	1986		AGPA194	
KTM	SM 50 SUPERMOTO	50	2006		AGPA159	AGPA159
KTM	SX 50 PRO JUNIOR LC	50	2002		AGPA159	
KTM	SX 50 PRO SENIOR LC	50	2004		AGPA159	AGPA159
KTM	SX 50 PRO SENIOR LC	50	2002	2003	AGPA159	
KTM	SX 50 SENIOR ADVENTURE	50	2004		AGPA159	
KTM	SX 60	60	1999		AGPA18	
KTM	SX 65	65	2002	2003	AGPA157	AGPA151
KTM	SX 65	65	2004	2009	AGPA157	AGPA157
KTM	SX 65	65	2000	2001	AGPA18	AGPA151
KTM	SX 65	65	2004	2008		AGPA159
KTM	80 PL/RSL/ L/ RS/ RL/ CHOPPER	80	1980		AGPA194	AGPA194

PASTIGLIE BRAKE PADS

ACCOSSATO

INDICE ANALITICO PASTIGLIE / pads alphabetical index

MARCA Brand	MODELLO Model	CC	DA From	A To	ANT. Front	POST. Rear
KTM	80 RSL, L, RS, RL, BORA,CHOPPER	80	1980		AGPA31	AGPA31
KTM	MX 80	80	1986		AGPA31	
KTM	MX 80	80	1986	1992	AGPA194	
KTM	MX 80	80	1991		AGPA31	
KTM	RLW 80	80	1980		AGPA31	AGPA31
KTM	MX 85	85	1990		AGPA194	
KTM	MX 85	85	1990		AGPA31	
KTM	SX 85	85	2004	2010	AGPA157	AGPA157
KTM	SX 85	85	2011		AGPA157	
KTM	SX 85	85	2012		AGPA211	AGPP210
KTM	SX 85	85	2011	2011		AGPP210
KTM	125 DUKE	125	2011			AGPP91
KTM	125 EURO TRAIL	125	1996		AGPA29	
KTM	125 STING	125	1999		AGPA32	AGPP91
KTM	125 SUPERMOTO	125	2000			AGPP91
KTM	DUKE 125	125	2011		AGPA184	
KTM	EXC 125 ENDURO	125	1999	2003	AGPA29	AGPP91
KTM	EXC 125 ENDURO	125	2004		AGPA29	AGPP80
KTM	EXE 125	125	2000			AGPP91
KTM	GS 125	125	1989	1990	AGPA98	
KTM	GS 125	125	1992		AGPA29	AGPA98
KTM	LC 125	125	1985		AGPA31	
KTM	LC 125	125	1985	1986	AGPA194	
KTM	LC 125	125	1986		AGPA31	AGPA31
KTM	LC2 125	125	1999		AGPA29	AGPP91
KTM	MX 125	125	1992	1993		AGPA98
KTM	MX 125	125	1985		AGPA31	
KTM	MX 125	125	1985		AGPA194	
KTM	MX 125	125	1986		AGPA31	AGPA31
KTM	MX 125	125	1986		AGPA194	AGPA194
KTM	MX 125	125	1989	1990		AGPA98
KTM	MX 125	125	1992	1993	AGPA29	
KTM	MX 125 - 600 CCM	125	1991		AGPA98	
KTM	MXC125/ 250/ 300/ 500/ 550	125	1992	1993	AGPA29	
KTM	RC 125	125	2014		AGPA184	AGPP91
KTM	SX 125	125	1996	1999	AGPA29	AGPP91
KTM	SX 125	125	2000	2003	AGPA29	AGPP91
KTM	SX 125	125	2004		AGPA29	AGPP80
KTM	SX 125 SM	125	2000		AGPA29	
KTM	XC 125	125	1985		AGPA31	
KTM	XC 125	125	1985		AGPA194	
KTM	XC 125	125	1986		AGPA31	AGPA31
KTM	XC 125	125	1986		AGPA194	AGPA194
KTM	SX 144	144	2007	2008	AGPA29	AGPP80
KTM	SX 150	150	2009		AGPA29	AGPP80
KTM	200 Duke	200	2012		AGPA184	AGPP91
KTM	EXC 200 Enduro	200	1999	2003	AGPA29	AGPP91
KTM	EXC 200 ENDURO	200	2004		AGPA29	AGPP80
KTM	RC 200	200	2014		AGPA184	AGPP91
KTM	SX 200	200	2002	2004	AGPA29	
KTM	SX 200	200	2003	2004		AGPP80
KTM	250 BAJA	250	1986		AGPA31	
KTM	250 BAJA	250	1986		AGPA194	
KTM	EXC 250 Enduro	250	1999	2003		AGPP91
KTM	EXC 250 ENDURO	250	2004			AGPP80
KTM	EXC 250 ENDURO / ENDURO 4T	250	1999	2004	AGPA29	
KTM	EXC 250 Enduro 4T	250	1999	2003		AGPP91
KTM	EXC 250 ENDURO 4T	250	2004	2006		AGPP80

MARCA Brand	MODELLO Model	CC	DA From	A To	ANT. Front	POST. Rear
KTM	EXC-F 250 ENDURO	250	2007			AGPP80
KTM	EXC-F 250 ENDURO 4T	250	2006	2010	AGPA29	
KTM	FREERIDE R 250	250	2014		AGPA211	AGPP210
KTM	GS 250	250	1989	1990		AGPA98
KTM	LC 250	250	1985		AGPA31	
KTM	LC 250	250	1985		AGPA194	
KTM	LC 250	250	1986		AGPA31	AGPA31
KTM	LC 250	250	1986		AGPA194	AGPA194
KTM	MC 250	250	1983	1984	AGPA31	AGPA31
KTM	MC 250	250	1983	1984	AGPA194	AGPA194
KTM	MX 250	250	1992	1993	AGPA29	
KTM	MX 250	250	1983	1984	AGPA31	AGPA31
KTM	MX 250	250	1983	1984	AGPA194	AGPA194
KTM	MX 250	250	1985		AGPA31	
KTM	MX 250	250	1985		AGPA194	
KTM	MX 250	250	1986		AGPA31	AGPA31
KTM	MX 250	250	1986		AGPA194	AGPA194
KTM	MX 250	250	1989	1990		AGPA98
KTM	MX 250	250	1992	1993		AGPA98
KTM	MX 250 VC, ENDURO	250	1987		AGPA33	AGPA33
KTM	MXC250	250	1992	1993	AGPA29	
KTM	SX 250	250	1996	2002	AGPA29	AGPP91
KTM	SX 250	250	2003		AGPA29	AGPP80
KTM	SX-F 250	250	2006		AGPA29	AGPP80
KTM	XC 250	250	1985		AGPA31	
KTM	XC 250	250	1985		AGPA194	
KTM	XC 250	250	1986	1989	AGPA31	AGPA31
KTM	XC 250	250	1986	1989	AGPA194	AGPA194
KTM	EXC 300	300	1993	1996	AGPA29	AGPA98
KTM	EXC 300 Enduro	300	1999	2003	AGPA29	AGPP91
KTM	EXC 300 ENDURO	300	2004		AGPA29	AGPP80
KTM	MX 300	300	1990			AGPA98
KTM	MX 300	300	1992		AGPA29	AGPA98
KTM	MXC300	300	1992	1993	AGPA29	
KTM	XC 300	300	1986	1990	AGPA194	AGPA194
KTM	XC 300	300	1985		AGPA31	
KTM	XC 300	300	1985		AGPA194	
KTM	XC 300	300	1986	1990	AGPA31	AGPA31
KTM	350 COUNTRY CROSS	350	1985		AGPA31	
KTM	350 COUNTRY CROSS	350	1985		AGPA194	
KTM	350 GS	350	1983		AGPA31	
KTM	EXC 350	350	1987		AGPA33	AGPA33
KTM	EXC-F 350	350	2011		AGPA29	AGPP80
KTM	FREERIDE 350	350	2012		AGPA211	AGPP210
KTM	GS 350	350	1987		AGPA33	AGPA33
KTM	GS 350	350	1983	1986	AGPA194	
KTM	GS 350 500 K4	350		1983	AGPA194	
KTM	GS4 350 500 K4	350	1983		AGPA31	
KTM	K4 350 500 K4	350	1983		AGPA31	
KTM	LC4 350	350	1992			AGPA98
KTM	MX 350	350	1987		AGPA33	AGPA33
KTM	SX-F 350	350	2011		AGPA29	AGPP80
KTM	XC 350 MC	350		1983	AGPA31	
KTM	XC 350 MC	350		1983	AGPA194	
KTM	MX 360	360	1996	1997	AGPA29	AGPP91
KTM	SX 360	360	1996	1997	AGPA29	AGPP91
KTM	XC 360	360	1996	1997	AGPA29	AGPP91

ACCOSSATO

PASTIGLIE BRAKE PADS

INDICE ANALITICO PASTIGLIE / pads alphabetical index

MARCA Brand	MODELLO Model	CC	DA From	A To	ANT. Front	POST. Rear
KTM	EXC 380 Enduro	380	1999			AGPP91
KTM	EXC 380 ENDURO	380	1998		AGPA29	
KTM	MX 380	380	1998		AGPA29	AGPP91
KTM	SX 380	380	1998	2002	AGPA29	AGPP91
KTM	XC 380	380	1998		AGPA29	AGPP91
KTM	390 Duke	390	2013		AGPA184	AGPP91
KTM	390 GS	390	1983		AGPA31	
KTM	GS 390	390	1983		AGPA194	
KTM	RC 390	390	2014		AGPA184	AGPP91
KTM	XC 390 , MC	390		1983	AGPA31	
KTM	XC 390 / MC	390		1983	AGPA194	
KTM	400 ENDURO	400	1987		AGPA33	AGPA33
KTM	EXC 400 Racing	400	2000	2003		AGPP91
KTM	EXC 400 RACING	400	2000	2004	AGPA29	
KTM	LC4 400	400	1993	1998	AGPA29	
KTM	LC4-E 400 Enduro	400	1999		AGPA29	AGPP91
KTM	SC 400	400	1999			AGPP91
KTM	SC 400 SUPERCOMPETITION	400	1996	1999	AGPA29	
KTM	SX 400 RACING	400	2000	2002	AGPA29	AGPP91
KTM	SXC 400 Tiainen Replica	400	1999	2000		AGPP91
KTM	SXC 400 TIAINEN REPLICA	400	1997		AGPA29	
KTM	XC 420 , MC	420		1983	AGPA31	
KTM	XC 420 / MC	420		1983	AGPA194	
KTM	450 RALLY	450	2011		AGPA29	AGPP91
KTM	450 RALLY	450	2011		AGPA92	
KTM	EXC 450	450	2003		AGPA29	
KTM	EXC 450 RACING	450	2004		AGPA29	AGPP80
KTM	SX 450	450	2003		AGPA29	
KTM	SX 450 ATV	450		2008	AGPA233	
KTM	SX 450 SM FACTORY	450	2004			AGPP80
KTM	SX 450 SM FACTORY REPLICA	450	2004		AGPA32	
KTM	SX 450 SMR	450	2004	2012		AGPP80
KTM	SX 450 SMR	450	2013		AGPA106	
KTM	SX 450 SMR	450	2004	2006	AGPA231	
KTM	SX 450 SMR	450	2007	2012	AGPA136	
KTM	SX 450 SMR 13- RSI	450	2013			AGPP80
KTM	SX-F 450	450	2003			AGPP80
KTM	XC 450 ATV	450		2008	AGPA233	
KTM	XC-F 450	450	2008		AGPA29	
KTM	XC-F 450 08- RSI	450	2008			AGPP80
KTM	MC 495 LELEU	495	1982	1983	AGPA31	
KTM	MC 495 LELEU	495	1982	1983	AGPA194	
KTM	MX 495 LELEU	495	1982	1983	AGPA194	
KTM	MX 495 LELEU	495	1982	1983	AGPA31	
KTM	GS 500 500K4 ENDURO	500	1983		AGPA194	
KTM	GS 500 K4	500			AGPA31	
KTM	LC 500	500	1985		AGPA31	
KTM	LC 500	500	1985		AGPA194	
KTM	LC 500	500	1986		AGPA31	AGPA31
KTM	LC 500	500	1986		AGPA194	AGPA194
KTM	MX 500	500	1985		AGPA31	
KTM	MX 500	500	1985		AGPA194	
KTM	MX 500	500	1986		AGPA31	AGPA31
KTM	MX 500	500	1986		AGPA194	AGPA194
KTM	MX 500	500	1987		AGPA33	AGPA33

MARCA Brand	MODELLO Model	CC	DA From	A To	ANT. Front	POST. Rear
KTM	MX 500	500	1989	1993		AGPA98
KTM	MX 500	500	1992	1993	AGPA29	
KTM	MXC500	500	1992	1993	AGPA29	
KTM	XC 500 , MC	500		1983	AGPA31	
KTM	XC 500 / MC	500		1983	AGPA194	
KTM	SX 505 ATV	505		2008	AGPA233	
KTM	SX 505 RACING	505	2007			AGPP80
KTM	SX-F 505	505	2007	2008	AGPA29	
KTM	XC 505 ATV	505		2008	AGPA233	
KTM	XC-F 505	505	2009		AGPA29	AGPP80
KTM	EXC 520 RACING	520	2000	2002	AGPA29	AGPP91
KTM	SX 520 RACING	520	2000	2002	AGPA29	
KTM	SX-F 520 Racing	520	2000	2002		AGPP91
KTM	EXC 525 RACING	525	2004			AGPP80
KTM	EXC 525 RACING	525	2003	2004	AGPA29	
KTM	EXC 525 Racing	525	2003			AGPP91
KTM	MXC 525 DESERT	525	2003	2004	AGPA29	
KTM	SX 525 RACING	525	2003	2006	AGPA29	
KTM	SX 525 SMR	525	2004		AGPA231	AGPP80
KTM	SX-F 525 Racing	525	2003			AGPP91
KTM	SX-F 525 RACING	525	2004	2006		AGPP80
KTM	EXC 530 RACING	530	2008		AGPA29	AGPP80
KTM	SXC 540 Tiainen Replica	540	1999	2000	AGPA29	AGPP91
KTM	LC4 550	550	1987		AGPA33	AGPA33
KTM	MX 550	550	1987		AGPA33	AGPA33
KTM	MXC550	550	1992	1993	AGPA29	
KTM	SX 560 SMR	560	2006		AGPA136	AGPP80
KTM	4T 600 ENDURO	600	1984		AGPA194	
KTM	4T 600 ENDURO	600	1984		AGPA31	
KTM	600 DUKE	600	1993	1995	AGPA32	
KTM	EXC 600	600	1987		AGPA33	AGPA33
KTM	GS 600	600	1985		AGPA31	
KTM	GS 600	600	1985		AGPA194	
KTM	LC4 600	600	1988		AGPA33	AGPA33
KTM	LC4 600 ENDURO	600	1988		AGPA33	AGPA33
KTM	LC4 600 SIX DAYS	600	1992		AGPA29	AGPA98
KTM	MC 600	600	1988		AGPA33	AGPA33
KTM	MX 600	600	1987		AGPA33	AGPA33
KTM	XC 600 CROSS	600	1985		AGPA31	
KTM	XC 600 CROSS / XCE CROSS	600	1985		AGPA194	
KTM	XCE 600 CROSS	600	1985		AGPA31	
KTM	620 DUKE	620	1996	1998	AGPA32	AGPA31
KTM	620 DUKE	620	1994	1998	AGPA194	
KTM	EGS 620 ADVENTURE / RALLYE / EGS-E	620	1999		AGPA29	
KTM	EGS 620 ENDURO / EGS-E	620	1996	1999	AGPA29	
KTM	LC4 620 Competition	620	1999			AGPP91
KTM	LC4 620 Competition SuperMoto	620	2000			AGPP91
KTM	LC4 620 RXC	620	1995			AGPP91
KTM	LC4 620 SC SUPERMOTO	620	2000		AGPA29	
KTM	LC4 620 Supercompetition	620	2001			AGPP91
KTM	LC4 620 SUPERCOMPETITION	620	1996	2000	AGPA29	

PASTIGLIE BRAKE PADS

INDICE ANALITICO PASTIGLIE / pads alphabetical index

MARCA Brand	MODELLO Model	CC	DA From	A To	ANT. Front	POST. Rear
KTM	LC4 620 SX	620	1995	1999	AGPA29	
KTM	SC 620	620	1999			AGPP91
KTM	SX 620	620	1995	1999		AGPP91
KTM	640 DUKE	625	1999	2002	AGPA32	
KTM	LC4 625 SC Supermoto	625	2002	2004	AGPA29	AGPP91
KTM	LC4 640 SUPERMOTO	625	2003		AGPA32	
KTM	SMC 625	625	2005		AGPA96	AGPP91
KTM	SXC 625	625	2003	2004	AGPA29	AGPP91
KTM	640 DUKE	640	1999	2002		AGPA31
KTM	640 Duke	640	2003	2006		AGPP91
KTM	640 DUKE	640	2003		AGPA96	
KTM	LC4 640 Adventure	640	1999	2004		AGPP91
KTM	LC4 640 ADVENTURE	640	2001	2002	AGPA29	
KTM	LC4 640 Adventure	640	2005			AGPP91
KTM	LC4 640 ADVENTURE	640	2005		AGPA92	
KTM	LC4 640 ADVENTURE (2 SETS)	640	2003	2007	AGPA29	
KTM	LC4 640 ADVENTURE R	640	2000		AGPA29	
KTM	LC4 640 E ENDURO	640	1999		AGPA29	
KTM	LC4 640 Supermoto	640	2003			AGPP91
KTM	LC4 640 Supermoto	640	2004		AGPA96	AGPP91
KTM	LC4-E 640 Enduro	640	1999			AGPP91
KTM	LC4-E 640 Supermoto	640	1999	2002		AGPP91
KTM	LC4-E 640 SUPERMOTO	640	1999	2006	AGPA29	
KTM	LC4 660 RALLY	660	2001		AGPA29	
KTM	LC4 660 Rallye	660	2001	2003		AGPP91
KTM	LC4 660 SM Factory Replica	660	2002		AGPA32	AGPP91
KTM	SMC 660 Supermoto	660	2004	2007		AGPP91
KTM	SMC 660 SUPERMOTO	660	2003		AGPA32	AGPP91
KTM	SMC 660 SUPERMOTO	660	2004		AGPA96	
KTM	690 Duke	690	2008	2011	AGPA112	AGPP91
KTM	690 Duke ABS	690	2012		AGPA96	AGPP91
KTM	690 Duke R	690	2010	2011	AGPA112	AGPP91
KTM	690 Duke R	690	2014		AGPA106	AGPP91
KTM	690 Enduro	690	2008		AGPA92	AGPP91
KTM	690 Enduro R	690	2009		AGPA92	AGPP91
KTM	690 SM	690	2007		AGPA112	AGPP91
KTM	690 SMC	690	2008		AGPA112	AGPP91
KTM	690 SUPERMOTO R	690	2008		AGPA112	AGPP91
KTM	950 R SUPERENDURO	950	2006		AGPA92	
KTM	950 SM	950	2005		AGPA112	AGPA29
KTM	950 SM R	950	2007		AGPA112	AGPA29
KTM	950 SUPERENDURO	950	2006			AGPA29
KTM	LC8 950 Adventure	950	2002		AGPA92	AGPP91
KTM	990 ADVENTURE / S	990	2006	2008		AGPA29
KTM	990 ADVENTURE R	990	2010		AGPA92	
KTM	990 ADVENTURE, ADVENTURE S, ABS	990	2006		AGPA92	
KTM	990 Super Duke	990	2004	2013		AGPP91
KTM	990 SUPER DUKE	990	2004		AGPA112	
KTM	990 Super Duke R	990	2009	2013		AGPP91
KTM	990 SUPER DUKE R	990	2009		AGPA112	
KTM	990 SUPER MOTO T	990	2009		AGPA112	AGPA29
KTM	990 SUPERMOTO	990	2007		AGPA112	
KTM	990 SUPERMOTO / R	990	2007			AGPA29
KTM	990 SUPERMOTO R	990	2010		AGPA106	
KTM	1050 ADVENTURE	1050	2015		AGPA96	
KTM	1190 ADVENTURE	1050	2013		AGPA96	
KTM	RC8 1190	1190	2008		AGPA106	
KTM	RC8 1190 R	1190	2009		AGPA106	
KTM	RC8 1190 R TRACK	1190	2011		AGPA106	
KTM	RC8 1190	1195	2008			AGPA42
KTM	RC8 1190 R	1195	2009			AGPA42
KTM	RC8 1190 R TRACK	1195	2011			AGPA42
KTM	1290 SUPER ADVENTURE	1290	2015		AGPA96	
KTM	1290 SUPER DUKE R	1290	2014		AGPA106	
KTM	1290 SUPER DUKE R	1301	2014			AGPA42
KTM	BAJA		1986		AGPA31	
KTM	BAJA		1986		AGPA194	
KTM	COUNTRY / BAJA		1985		AGPA194	
KTM	COUNTRY, BAJA		1985		AGPA31	
KTM	ENDURO		1983		AGPA31	
KTM	E-SM FREERIDE		2015			AGPP210
KTM	E-SM FREERIDE		2015		AGPA211	
KTM	E-SX FREERIDE		2015			AGPP210
KTM	E-SX FREERIDE		2015		AGPA211	
KTM	E-XC FREERIDE		2015			AGPP210
KTM	E-XC FREERIDE		2015		AGPA211	
KTM	FREERIDE ELECTRIC		2012			AGPP210
KTM	FREERIDE ELECTRIC		2012		AGPA211	
KTM	GS, EXC, ENDURO MODELS		1991			AGPA98
KTM	MOST MODELS		1994			AGPP91
KTM	REPLICA					AGPP80
KYMCO						
KYMCO	QUANNON 15		2008		AGPA23	AGPA23
KYMCO	50 AGILITY	50	2005	2008	AGPA80	
KYMCO	50 AGILITY (4T)	50	2006		AGPA80	
KYMCO	50 AGILITY (4T) R12	50	2006		AGPA80	
KYMCO	50 Calypso	50	1997		AGPA222	
KYMCO	50 FILLY LX	50	2002		AGPA80	
KYMCO	50 Heroism	50	1997		AGPA222	

ACCOSSATO

PASTIGLIE BRAKE PADS

INDICE ANALITICO PASTIGLIE / pads alphabetical index

MARCA Brand	MODELLO Model	CC	DA From	A To	ANT. Front	POST. Rear
KYMCO	50 MXER	50	2003			AGPA50
KYMCO	50 MXU	50	2005			AGPA50
KYMCO	50 NEW SENTO	50	2011		AGPA80	
KYMCO	50 SENTO	50	2008	2010	AGPA80	
KYMCO	50 VITALITY	50	2004		AGPA80	
KYMCO	50 YUP SP/AL	50	2002		AGPA80	
KYMCO	AGILITY 50 4T R 16	50	2006		AGPA50	
KYMCO	B & W 50	50	2004		AGPA23	
KYMCO	DD 50 SNIPER	50	1994			AGPP150
KYMCO	DINK 50/ DINK SPORT 50/ B&W	50	1999		AGPA23	
KYMCO	K-PIPE 50	50	2012		AGPA23	
KYMCO	MANBOY 50	50	1995		AGPA168	
KYMCO	NEW DINK 50	50	2008		AGPA23	
KYMCO	PEOPLE 50	50	1999	2002	AGPA50	
KYMCO	RS 50 AGILITY NAKED	50	2010		AGPA80	
KYMCO	SPACER 50	50	1999		AGPA23	
KYMCO	SUPER 8 50	50	2008		AGPA50	
KYMCO	SUPER 9 50 A/C	50	2002		AGPA23	AGPA50
KYMCO	YAGER 50	50	2001		AGPA23	
KYMCO	ZAP 50	50	1995		AGPA168	
KYMCO	SP YUP 90	90	1995		AGPA168	
KYMCO	100 SPIKE	100	2002		AGPA79	
KYMCO	COBRA RACER 100	100	1999		AGPA23	
KYMCO	110 SPIKE	110	2003		AGPA79	
KYMCO	125 AGILITY	125	2006		AGPA80	
KYMCO	125 AGILITY CITY	125	2011		AGPA80	
KYMCO	125 Calypso	125	1999		AGPA222	
KYMCO	125 DOWNTOWN I	125	2010		AGPA72	AGPP103
KYMCO	125 G-DINK	125	2012		AGPA72	AGPP107
KYMCO	125 Heroism	125	1995		AGPA222	
KYMCO	125 HIPSTER	125	2001		AGPA23	
KYMCO	125 JETIX	125	2008		AGPA79	
KYMCO	125 K-PIPE	125	2013		AGPA23	
KYMCO	125 K-XCTI	125	2014		AGPA99	AGPP107
KYMCO	125 LIKE	125	2011		AGPA80	
KYMCO	125 MXER	125	2003			AGPA50
KYMCO	125 PEOPLE GTI	125	2012		AGPA99	AGPP103
KYMCO	125 PULSAR	125	2001		AGPA23	
KYMCO	125 SPIKE	125	2002		AGPA79	
KYMCO	125 STRYKER ON/OFF	125	1099		AGPA80	
KYMCO	125 SUPER DINK	125	2010		AGPA72	AGPP103
KYMCO	125 VIVIO	125	2001		AGPA80	
KYMCO	125 ZING	125	1996		AGPA23	
KYMCO	AGILITY 125 16+	125	2014		AGPA50	
KYMCO	AGILITY 16+ 125	125	2014			AGPA23
KYMCO	B&W 125 / DINK SPORT 125	125	1999		AGPA23	AGPA23
KYMCO	CK 125	125	2004	2013	AGPA79	
KYMCO	CK-1 125	125	2014		AGPA23	
KYMCO	CRUISER 125	125	1999		AGPA23	
KYMCO	DINK 125	125	1996	2000	AGPA23	AGPA23
KYMCO	GRAN DINK 125	125	2002		AGPA23	AGPA23
KYMCO	MOVIE 125	125	1999		AGPA23	
KYMCO	MOVIE XL 125	125	2001		AGPA23	
KYMCO	NEW DINK 125	125	2008		AGPA23	
KYMCO	PEOPLE 125	125	2001		AGPA50	
KYMCO	PEOPLE 125 ONE I	125	2014		AGPA50	
KYMCO	S 125 PEOPLE	125	2005		AGPA50	AGPP107

MARCA Brand	MODELLO Model	CC	DA From	A To	ANT. Front	POST. Rear
KYMCO	SPACER 125	125	1999		AGPA23	AGPA23
KYMCO	SUPER 8 125	125	2008		AGPA50	
KYMCO	SUPER 9 125	125	2000			AGPA50
KYMCO	TECHNO GT 125	125	2006		AGPA23	
KYMCO	YAGER 125	125	2001		AGPA23	AGPA23
KYMCO	YAGER 125 GT	125	2009		AGPA23	
KYMCO	150 HEROISM	150	1995		AGPA222	AGPP150
KYMCO	150 HIPSTER	150	2001		AGPA23	
KYMCO	150 MXER	150	2003			AGPA50
KYMCO	150 MXU	150	2005			AGPA50
KYMCO	150 STRYKER OFF	150	2001		AGPA80	
KYMCO	150 VIVIO	150	2001		AGPA80	
KYMCO	B&W 150	150	2001		AGPA23	
KYMCO	DINK 150	150	1999		AGPA23	AGPA23
KYMCO	DX 150 Custom	150	1993		AGPA79	
KYMCO	GRAN DINK 150	150	2002		AGPA23	AGPA23
KYMCO	MOVIE 150 XL	150	2001		AGPA23	
KYMCO	NSR 150	150	1993		AGPA79	
KYMCO	PEOPLE 150	150	2001		AGPA50	
KYMCO	QUANNON 150	150	2010		AGPA23	AGPA23
KYMCO	SPACER 150	150	1999		AGPA23	AGPA23
KYMCO	YAGER 150	150	2001		AGPA23	AGPA23
KYMCO	ZING 150	150	1999		AGPA23	
KYMCO	200 DOWNTOWN I	200	2010		AGPA72	AGPP103
KYMCO	200 PEOPLE GTI	200	2012		AGPA99	AGPP103
KYMCO	AGILITY 200 16+	200	2014		AGPA50	AGPA23
KYMCO	AGILITY 200 R 16	200	2011		AGPA50	AGPA23
KYMCO	DINK 200	200	2004		AGPA23	AGPA23
KYMCO	I NEW DINK 200	200	2008		AGPA23	AGPA23
KYMCO	LIKE I 200	200	2010		AGPA23	AGPA23
KYMCO	S 200 PEOPLE	200	2005		AGPA50	AGPP107
KYMCO	SUPER 9 200	200	2000		AGPA50	
KYMCO	YAGER 200	200	2004		AGPA23	AGPA23
KYMCO	250 MXU	250	2006		AGPA173	
KYMCO	250 URBAN QUAD	250	2006		AGPA173	AGPA43
KYMCO	250 VENOX	250	2001		AGPA72	AGPA72
KYMCO	250 XCITING	250	2004	2005	AGPA72	AGPA72
KYMCO	250 XCITING	250	2006		AGPA72	AGPP107
KYMCO	B&W 250/ DINK SPORT 250	250	2001		AGPA23	AGPA23
KYMCO	GRAN DINK 250	250	2001		AGPA43	AGPP51
KYMCO	KXR 250	250	2004		AGPA173	AGPA43
KYMCO	MXU 250	250	2006			AGPA43
KYMCO	PEOPLE 250	250	2003		AGPA23	
KYMCO	S 250 PEOPLE LEFT/REAR	250	2006			AGPP107
KYMCO	S 250 PEPLE RIGHT	250	2006		AGPA23	
KYMCO	YUP 250	250	2003		AGPA23	AGPA23
KYMCO	300 DOWNTOWN I	300	2010		AGPA72	AGPP103
KYMCO	300 G-DINK	300	2012		AGPA72	AGPP107
KYMCO	300 K-XCTI	300	2012		AGPA99	AGPP107
KYMCO	300 MAXXER	300	2006	2010	AGPA173	AGPA43
KYMCO	300 MAXXER SUPERMOTO	300	2015		AGPA173	AGPA43
KYMCO	300 MXU	300	2006		AGPA173	AGPA173
KYMCO	300 PEOPLE GTI	300	2012		AGPA99	AGPP103
KYMCO	300 PEOPLE GTI	300	2010		AGPA72	
KYMCO	300 PEOPLE SI LEFT/REAR	300	2008		AGPA80	AGPP107
KYMCO	300 XCITING RI	300	2008		AGPA72	AGPP107
KYMCO	PEOPLE SI RIGHT 300	300	2008		AGPA23	

PASTIGLIE BRAKE PADS

INDICE ANALITICO PASTIGLIE / pads alphabetical index

MARCA Brand	MODELLO Model	CC	DA From	A To	ANT. Front	POST. Rear
KYMCO	400 XCITING I	400	2012		AGPA101	AGPP237
KYMCO	450 I MXU	450	2013		AGPA173	AGPA173
KYMCO	500 MXU	500	2006		AGPA173	AGPA173
KYMCO	500 UXV 4X4	500	2008		AGPA173	AGPA173
KYMCO	500 XCITING	500	2004		AGPA72	AGPP237
KYMCO	500 XCITING I EVO ABS	500	2011		AGPA72	AGPP237
KYMCO	500 XCITING R ABS	500	2009		AGPA72	AGPP237
KYMCO	700 MYROAD, ABS	700	2009		AGPA72	AGPP237
KYMCO	SUPER 9 50 L/C	950	2002		AGPA23	
LAVERDA						
LAVERDA	50 GAUCHO	50	1992		AGPA31	AGPA31
LAVERDA	50 GAUCHO	50	1992		AGPA194	
LAVERDA	OR 50 ATLAS	50	1986		AGPA31	AGPA31
LAVERDA	OR 50 ATLAS	50	1986		AGPA194	
LAVERDA	OR 50 ATLAS	50	1990		AGPA31	AGPA31
LAVERDA	OR 50 ATLAS	50	1990		AGPA194	
LAVERDA	125 CUSTOM	125	1986		AGPA31	
LAVERDA	125 CUSTOM	125	1986		AGPA194	
LAVERDA	125 FORMULA	125	1986		AGPA151	
LAVERDA	CU 125 RIDE	125	1986		AGPA194	
LAVERDA	CU 125 RIDE	125	1986		AGPA31	
LAVERDA	GS 125 LESMO	125	1986		AGPA151	AGPA151
LAVERDA	GS 125 LESMO	125	1990		AGPA151	AGPA151
LAVERDA	LB 125 STRADA, SPORT	125	1985		AGPA151	
LAVERDA	LB 125 UNO	125	1985		AGPA31	
LAVERDA	LB 125 UNO	125	1985		AGPA194	
LAVERDA	PHOENIX 125	125	2001		AGPA158	AGPA50
LAVERDA	PHOENIX 150	150	2001		AGPA158	AGPA50
LAVERDA	PHOENIX 200	200	2001		AGPA158	AGPA50
LAVERDA	GS 350 LESMO	350	1986		AGPA31	AGPA31
LAVERDA	GS 350 LESMO	350	1986		AGPA194	AGPA194
LAVERDA	PF 350 ALPINO	350			AGPA31	AGPA31
LAVERDA	PF 350 ALPINO	350			AGPA194	AGPA194
LAVERDA	RS 350 ALPINO	350			AGPA31	AGPA31
LAVERDA	RS 350 ALPINO	350			AGPA194	AGPA194
LAVERDA	500 ALPINO / S	500	1977		AGPA194	AGPA194
LAVERDA	500 ALPINO, S	500	1977		AGPA31	AGPA31
LAVERDA	SFC 500	500			AGPA141	AGPA141
LAVERDA	OR 600 ATLAS	600	1986			AGPA31
LAVERDA	OR 600 ATLAS	600	1986			AGPA194
LAVERDA	SFC 600	600	1986		AGPA141	AGPA141
LAVERDA	650	650	1992		AGPA32	AGPA31
LAVERDA	650 GHOST	650	1996			AGPA194
LAVERDA	650 GHOST LEGEND	650	1997			AGPA194
LAVERDA	650 SPORT	650	1992			AGPA194
LAVERDA	650 STRIKE	650	1997			AGPA194
LAVERDA	650 V-SIX	650	1993		AGPA141	AGPA141
LAVERDA	668	668	1996		AGPA32	AGPA31
LAVERDA	668	668	1996			AGPA194
LAVERDA	668 DIAMANTE	668	1997			AGPA194
LAVERDA	668 GHOST STRIKE	668	1998			AGPA194
LAVERDA	668 GHOST, DIAMANTE	668	1997		AGPA32	AGPA31
LAVERDA	700 EL CID	700	1990		AGPA98	AGPA98
LAVERDA	750 CUP	750	1998		AGPA32	AGPA194
LAVERDA	750 DIAMANTE	750	1997		AGPA32	AGPA194
LAVERDA	750 GHOST STRIKE	750	1997		AGPA32	AGPA194
LAVERDA	750 S / S FORMULA / STRIKE	750	1997			AGPA194
LAVERDA	750 S FORMULA	750	1997		AGPA32	
LAVERDA	750 S SPORT	750	1999			AGPA194
LAVERDA	750 S, S CARENATA	750	1997		AGPA32	
LAVERDA	750 SPORT 99- HF	750	1999		AGPA32	
LAVERDA	750 STRIKE/ BLACK	750	1999		AGPA32	
LAVERDA	750 T8	750	1998		AGPA32	
LAVERDA	CUP 750	750	1998			AGPA31
LAVERDA	DIAMANTE 750	750	1997			AGPA31
LAVERDA	GHOST STRIKE 750	750	1997			AGPA31
LAVERDA	S FORMULA 750	750	1997			AGPA31
LAVERDA	S, S CARENATA 750	750	1997			AGPA31
LAVERDA	SF2 750	750	1974	1978	AGPA141	
LAVERDA	SF3 750	750	1974	1978	AGPA141	
LAVERDA	SF3 750 RGS CORSA, EXECUTIVE	750	1977		AGPA141	AGPA141
LAVERDA	SPORT 750	750	1999			AGPA31
LAVERDA	STRIKE/ BLACK STRIKE 750	750	1999			AGPA31
LAVERDA	T8 750	750	1998			AGPA31
LAVERDA	TTS 800	800	1999		AGPA32	AGPA42
LAVERDA	1000 JOTA	1000	1976		AGPA141	AGPA141
LAVERDA	3C 1000 3CE, 3CL	1000	1974		AGPA141	AGPA141
LAVERDA	JOTA 1000	1000	1995		AGPA32	AGPA31
LAVERDA	RGS 1000	1000	1983		AGPA141	AGPA141
LAVERDA	RGS 1000 JOTA	1000	1986		AGPA141	AGPA141
LAVERDA	SFC 1000	1000	1985	1986	AGPA141	AGPA141
LAVERDA	SFC 1000 (RAD. CAL)	1000	2004		AGPA112	AGPA42
LAVERDA	TGA 1000 EXECUTIVE	1000	1984		AGPA141	AGPA141
LAVERDA	1200 MIRAGE	1200	1978		AGPA141	AGPA141
LAVERDA	STRIKE		1999		AGPA32	
LEM						
LEM	50 CX2, CX3, RX2, RX3	50	2003		AGPA159	AGPA159
LEM	50 FLASH	50	1994		AGPA84	
LEM	50 R2, R3, R3 XC	50	2003		AGPA159	AGPA159
LEM	RX 65	65	2005		AGPA159	AGPA159
LEM	RX 150	150	2011			AGPA159
LONCIN						
LONCIN	LX 110 4	110	2002		AGPA23	
LONCIN	LX 125	125	2002		AGPA23	
LONCIN	LX 150 6	150	2002		AGPA22	
MACAL						
MACAL	FLASH 50	50	1999		AGPA13	
MACBOR						
MACBOR	XC 50 510 RACING	50	2004		AGPA47	AGPA18
MACBOR	XC 50 512 PRO	50	2004		AGPA47	
MACBOR	XC 50 512 R 6V	50	2004		AGPA47	AGPA18
MACBOR	XC 50 512 RACING	50	2004		AGPA47	AGPA18
MACBOR	XC 50 512 T	50	2004		AGPA47	
MAICO						
MAICO	250 ENDURO	250	1999		AGPA29	AGPP91
MAICO	250 MOTOCROSS	250	1999		AGPA29	AGPP91
MAICO	GM 250 LC	250	1985		AGPA194	
MAICO	GM 250 STAR	250	1986		AGPA163	AGPA163
MAICO	GM LC 250	250	1985		AGPA31	
MAICO	GP 250 E	250	1987		AGPA163	AGPA163

ACCOSSATO

PASTIGLIE BRAKE PADS

INDICE ANALITICO PASTIGLIE / pads alphabetical index

MARCA Brand	MODELLO Model	CC	DA From	A To	ANT. Front	POST. Rear
MAICO	GP 250 MOTOCROSS	250	1987		AGPA163	AGPA163
MAICO	MD 250	250	1983		AGPA31	AGPA31
MAICO	MD 250	250	1983		AGPA194	AGPA194
MAICO	GP 400 E	400	1987		AGPA163	AGPA163
MAICO	GP 400 MOTOCROSS	400	1987		AGPA163	AGPA163
MAICO	500 ENDURO	500	1999		AGPA29	
MAICO	500 MOTOCROSS	500	1999		AGPA29	AGPP91
MAICO	500 SUPERMOTARD	500	1999		AGPA29	AGPP91
MAICO	ALL MODELS		1991			AGPA98
MAICO	GM 500 LC	500	1985		AGPA194	
MAICO	GM 500 STAR	500	1986		AGPA163	AGPA163
MAICO	GM LC 500	500	1985		AGPA31	
MAICO	GP 500 E	500	1987		AGPA163	AGPA163
MAICO	GP 500 MOTOCROSS	500	1987		AGPA163	AGPA163
MAICO	GP 550	550	1987		AGPA163	AGPA163
MALAGUTI						
MALAGUTI	50 ENDURO	50	1985		AGPA194	
MALAGUTI	50 EVOLUTION	50	1991		AGPA151	
MALAGUTI	50 FIFTY FULL, CX, TOP	50	1985		AGPA16	
MALAGUTI	CENTRO 50	50	1993		AGPA15	
MALAGUTI	CH 50	50	1986		AGPA16	
MALAGUTI	CIAK 50	50	1999		AGPA13	
MALAGUTI	CIAK 50 MASTER	50	2004	2005	AGPA13	
MALAGUTI	CIAK 50 MASTER 4T	50	2005		AGPA13	
MALAGUTI	CIAK 50 MASTER EURO 2	50	2006		AGPA13	
MALAGUTI	CIAK 50 MONO EURO2 3	50	2003		AGPA13	
MALAGUTI	CIAK 50 TD	50	2000	2001	AGPA13	AGPA13
MALAGUTI	CIAK 50 TWIN DISK	50	2002		AGPA13	AGPA13
MALAGUTI	CR1 50 CROSSER	50	1997		AGPA13	
MALAGUTI	ENDURO 50	50	1985		AGPA31	
MALAGUTI	ES 50 DUNE	50	1989		AGPA151	AGPA151
MALAGUTI	F 10 50	50	1994		AGPA13	
MALAGUTI	F 10 50 TIMERMACHINE	50	2002		AGPA13	
MALAGUTI	F 10 50 WAP	50	2002		AGPA13	
MALAGUTI	F 12 50 MECHATRONIC	50	2003		AGPA13	AGPA13
MALAGUTI	F 12 50 PHANTOM DIGIT	50	2002		AGPA13	AGPA13
MALAGUTI	F 12 50 PHANTOM TWIN DISK	50	1998			AGPA13
MALAGUTI	F 12 50 RACING LIFE	50	2003		AGPA13	AGPA13
MALAGUTI	F 12 50 TYRE TRACK	50	2003		AGPA13	AGPA13
MALAGUTI	F 12 R 50 PHANTOM AC	50	2007	2008	AGPA13	
MALAGUTI	F 15 50 FIREFOX TWIN DISK	50	1998			AGPA13
MALAGUTI	F-12 50 PHANTOM L.C.	50	1994	1998	AGPA15	
MALAGUTI	F-15 50 FIREFOX L.C.	50	1996		AGPA15	
MALAGUTI	FIFTY	50	2004		AGPA20	
MALAGUTI	FIFTY EVOLUTION	50	1991		AGPA18	
MALAGUTI	FIFTY MISTRAL	50	1990		AGPA16	
MALAGUTI	MDX 50	50	1986		AGPA151	
MALAGUTI	MRX 50	50	1989		AGPA31	
MALAGUTI	MRX 50	50	1989		AGPA194	
MALAGUTI	NKD 50	50	2004		AGPA20	
MALAGUTI	NKD 50 DRAGON	50	2006		AGPA142	AGPA18
MALAGUTI	NKD 50 DRAGON	50	2006		AGPA175	
MALAGUTI	RST 50	50	1990		AGPA31	AGPA31
MALAGUTI	RST 50 SPORT	50			AGPA151	AGPA151
MALAGUTI	YESTERDAY 50	50	1998		AGPA13	
MALAGUTI	CIAK 100	100	1999	2001	AGPA13	AGPA13
MALAGUTI	F 12 100 PHANTOM	100	1999		AGPA13	AGPA13
MALAGUTI	125 BLOG	125	2010		AGPA80	AGPA83
MALAGUTI	125 CENTRO IE	125	2008		AGPA80	AGPA89
MALAGUTI	125 MADISON 3	125	2008			AGPA42
MALAGUTI	125 PHANTOM MAX	125	2004		AGPA20	AGPP31
MALAGUTI	125 SPORT CITY CUBE	125	2008			AGPP31
MALAGUTI	F-18 125 , WARRIOR	125	2000			AGPP31
MALAGUTI	R 125 MADISON	125	1999			AGPP31
MALAGUTI	150 MADISON	150	1999			AGPP31
MALAGUTI	160 BLOG	160	2010		AGPA80	AGPA83
MALAGUTI	160 CENTRO IE	160	2008		AGPA80	AGPA89
MALAGUTI	180 MADISON	180	2002			AGPP31
MALAGUTI	200 PHANTOM MAX	200	2004		AGPA20	AGPP31
MALAGUTI	200 SPORT CITY CUBE	200	2008			AGPP31
MALAGUTI	S 200 MADISON	200	2003			AGPP31
MALAGUTI	250 MADISON	250	1999		AGPA99	AGPP31
MALAGUTI	250 MADISON 3 I.E.	250	2008			AGPA42
MALAGUTI	250 PASSWORD	250	2006		AGPA20	AGPP31
MALAGUTI	250 PHANTOM MAX	250	2005		AGPA20	AGPP31
MALAGUTI	250 SPORT CITY CUBE	250	2008			AGPP31
MALAGUTI	MADISON RS 250	250	2005		AGPA20	AGPP31
MALAGUTI	300 SPORT CITY CUBE	300	2008			AGPP31
MALAGUTI	K 400 MADISON	400	2002		AGPA99	AGPP31
MALAGUTI	MGX 450 RONCO	450	1987		AGPA16	
MALAGUTI	GT 500 SPIDERMAX	500	2004			AGPA42
MALAGUTI	RS 500 SPIDERMAX	500	2009			AGPA42
MALANCA						
MALANCA	E2 C80	80			AGPA151	AGPA151
MALANCA	GTI 80	80			AGPA151	AGPA151
MALANCA	E2 125	125			AGPA151	AGPA151
MALANCA	GTI 125	125			AGPA151	AGPA151
MALANCA	MARK 125	125	1985		AGPA31	
MALANCA	E2 CS OB ONE 5N, 6N, RACING				AGPA151	AGPA151
MALANCA	E2 SPORT				AGPA151	AGPA151
MASH						
MASH	125 Scrambler	125	2013		AGPA221	
MASH	125 Seventy	125	2013		AGPA221	

PASTIGLIE BRAKE PADS

INDICE ANALITICO PASTIGLIE / pads alphabetical index

MARCA Brand	MODELLO Model	CC	DA From	A To	ANT. Front	POST. Rear
MBK						
MBK	50 TARGET	50	1992		AGPA84	
MBK	BOOSTER 50 NEXT GENERATION	50	1997		AGPA14	
MBK	BOOSTER 50 ROCKET	50	1995		AGPA14	
MBK	BOOSTER 50 TRACK	50	1997		AGPA14	
MBK	CS 50 MACH G	50	2002		AGPA13	
MBK	DODO 50	50	2000		AGPA13	
MBK	EQUALIS 50	50	1996		AGPA14	
MBK	EVOLIS 50	50	1992		AGPA14	
MBK	FIZZ 50	50	1993		AGPA14	
MBK	FLIPPER 50	50	1998		AGPA13	
MBK	FORTE 50	50	1994		AGPA14	
MBK	NITRO 50	50	1997	2001	AGPA14	AGPA19
MBK	OVETTO 50	50	1997		AGPA14	
MBK	ROCKET 50	50	1996		AGPA13	
MBK	STUN'T 50	50	2000		AGPA13	
MBK	STUNT 50	50	2000		AGPA19	
MBK	X-POWER	50	2004		AGPA20	
MBK	EVOLIS 80	80	1994		AGPA14	
MBK	100 BOOSTER	100	2001		AGPA89	
MBK	125 FLAME R/F	125	1995	2003	AGPA89	
MBK	125 SKYCRUISER	125	2006		AGPA86	AGPA42
MBK	125 THUNDER	125	2001			AGPA42
MBK	CITYLINER 125	125	2008		AGPA170	AGPA24
MBK	YP 125 FLAME X	125	2005		AGPA85	
MBK	YP 125 SKYLINER	125	2001			AGPA42
MBK	YW 125 Z	125	2010		AGPA235	
MBK	150 SKYLINER	150	2001		AGPA29	AGPA42
MBK	150 THUNDER	150	2001	2003	AGPA29	
MBK	150 VERTEX	150	1997		AGPA29	
MBK	150 VERTEX	150	1997		AGPA89	
MBK	XQ 150 THUNDER	150	2002			AGPA42
MBK	180 SKYLINER	180	2004		AGPA29	AGPA42
MBK	250 SKYLINER	250	2000		AGPA22	AGPA24
MBK	300 KILIBRE	300	2003	2004	AGPA29	AGPA29
MBK	400 SKYLINER	400	2004		AGPA22	
MEGELLI						
MEGELLI	125 M	125	2008			AGPA168
MEGELLI	125 M, R, S	125	2008			AGPP72
MONDIAL						
MONDIAL	1000 EVO (RAD. CAL)	1000	2004		AGPA112	AGPA42
MONDIAL	1000 PIEGA	1000	2003		AGPA112	AGPA42
MONDIAL	1000 RZ NUDA	1000	2004		AGPA112	AGPA42
MONDIAL	1000 STARFIGHTER (RAD. CAL)	1000	2004		AGPA112	AGPA42
MONTESA						
MONTESA	80 CROSS	80	1996		AGPA29	
MONTESA	125	125	1996		AGPA29	
MONTESA	COTA 125	125	1988		AGPA18	AGPA18
MONTESA	COTA 304	240	1988		AGPA18	AGPA18
MONTESA	COTA 307	240	1989		AGPA18	AGPA18
MONTESA	COTA 309	240	1989		AGPA18	AGPA31
MONTESA	COTA TRIAL 307	240	1988		AGPA18	AGPA18
MONTESA	COTA 315 R	249	1997		AGPA18	AGPA18
MONTESA	250 COTA 4RT	250	2005	2013	AGPA45	AGPA47
MONTESA	250 E	250	1995		AGPA29	
MONTESA	COTA 310	250	1989		AGPA18	AGPA31
MONTESA	260 COTA 4RT	260	2014		AGPA45	AGPA47
MONTESA	260 EVASION	260	1992			AGPA194
MONTESA	COTA TRIAL 311	260	1992		AGPA18	AGPA31
MONTESA	EVASION 260	260	1992		AGPA18	AGPA31
MONTESA	309 COTA	309	1989			AGPA194
MONTESA	310 COTA	310	1989			AGPA194
MONTESA	311 COTA TRIAL	311	1992			AGPA194
MONTESA	315R 360	315	2001	2004		AGPA47
MONTESA	320 COTA	320	1996		AGPA29	
MONTESA	COTA 335	330	1987	1991	AGPA18	AGPA18
MONTESA	360 315R	360	2001	2004	AGPA45	
MONTESA	H7 360 ENDURO	360	1986		AGPA16	
MONTESA	M7 360 ENDURO	360	1985		AGPA18	
MORBIDELLI						
MORBIDELLI	125 cc	125			AGPA18	AGPA18
MORIWAKI						
MORIWAKI	MD 250	250	2009		AGPA38	
MOTO GUZZI						
MOTO GUZZI	V65 TT 650	60	1986		AGPA31	AGPA31
MOTO GUZZI	125 BX	125	1992		AGPA194	AGPA194
MOTO GUZZI	125 CUSTOM	125	1985		AGPA194	
MOTO GUZZI	125 ENDURO TT	125	1985		AGPA194	
MOTO GUZZI	BX 125	125	1992		AGPA31	AGPA31
MOTO GUZZI	CUSTOM 125	125	1985		AGPA31	
MOTO GUZZI	ENDURO TT 125	125	1985		AGPA31	
MOTO GUZZI	240 / 4	240	1977		AGPA194	
MOTO GUZZI	250 TS	250	1975	1976	AGPA194	
MOTO GUZZI	TS 250	250	1975	1976	AGPA31	
MOTO GUZZI	350	350	1977		AGPA31	AGPA31
MOTO GUZZI	350	350	1977		AGPA194	AGPA194
MOTO GUZZI	350 FALCO	350	1988		AGPA194	AGPA194
MOTO GUZZI	350 IMOLA	350	1978		AGPA194	AGPA194
MOTO GUZZI	350 NEVADA	350	1992		AGPA194	AGPA194
MOTO GUZZI	FALCO 350	350	1988		AGPA31	AGPA31
MOTO GUZZI	IMOLA 350	350	1978		AGPA31	AGPA31
MOTO GUZZI	NEVADA 350	350	1992		AGPA31	
MOTO GUZZI	NTX 350	350	1988		AGPA31	AGPA31
MOTO GUZZI	NTX 350	350	1990		AGPA31	AGPA141
MOTO GUZZI	NTX 350	350	1988		AGPA194	AGPA194
MOTO GUZZI	NTX 350	350	1990		AGPA194	
MOTO GUZZI	V35 350 C	350			AGPA141	AGPA194
MOTO GUZZI	V35 350 FLORIDA	350			AGPA141	AGPA194
MOTO GUZZI	V35 350 GT	350	1990		AGPA141	AGPA194
MOTO GUZZI	V35 350 GT	350			AGPA194	
MOTO GUZZI	V35 350 II / IMOLA / IMOLA II	350	1977		AGPA194	AGPA194
MOTO GUZZI	V35 350 III	350	1987		AGPA141	AGPA141
MOTO GUZZI	V35 350 TT	350	1986		AGPA141	AGPA141
MOTO GUZZI	V35 C 350	350				AGPA31
MOTO GUZZI	V35 FLORIDA 350	350				AGPA31
MOTO GUZZI	V35 GT 350	350	1990			AGPA31
MOTO GUZZI	V35 GT 350	350			AGPA31	
MOTO GUZZI	V35 II, IMOLA, IMOLA II 350	350	1977		AGPA31	AGPA31
MOTO GUZZI	400	400	1979		AGPA31	AGPA31
MOTO GUZZI	400	400	1979		AGPA194	AGPA194
MOTO GUZZI	500	500	1977		AGPA31	AGPA31
MOTO GUZZI	500	500	1977		AGPA194	AGPA194
MOTO GUZZI	500 MONZA	500	1978		AGPA194	AGPA194
MOTO GUZZI	MONZA 500	500	1978		AGPA31	AGPA31
MOTO GUZZI	V50 1,2,3, MONZA CHOPPER 500	500	1977		AGPA31	AGPA31
MOTO GUZZI	V50 500 1/2/3/ MONZA / CHOPPER	500	1977		AGPA194	AGPA194

ACCOSSATO

PASTIGLIE BRAKE PADS

INDICE ANALITICO PASTIGLIE / pads alphabetical index

MARCA Brand	MODELLO Model	CC	DA From	A To	ANT. Front	POST. Rear
MOTO GUZZI	650	650	1980		AGPA31	AGPA31
MOTO GUZZI	650	650	1980		AGPA194	AGPA194
MOTO GUZZI	FLORIDA 650	650			AGPA31	AGPA31
MOTO GUZZI	GT 650 SESSANTACINQUE	650	1989		AGPA194	AGPA194
MOTO GUZZI	GT SESSANTACINQUE 650	650	1989		AGPA31	AGPA31
MOTO GUZZI	NTX 650	650	1990		AGPA31	
MOTO GUZZI	NTX 650	650	1990		AGPA194	AGPA141
MOTO GUZZI	V65 650 FLORIDA	650	1986		AGPA141	AGPA141
MOTO GUZZI	V65 650 GT	650	1990		AGPA141	
MOTO GUZZI	V65 650 LARIO	650	1986		AGPA194	AGPA194
MOTO GUZZI	V65 650 NTX	650	1987		AGPA194	AGPA194
MOTO GUZZI	V65 650 SP / CHOPPER	650			AGPA194	AGPA194
MOTO GUZZI	V65 650 TT	650	1986		AGPA194	AGPA194
MOTO GUZZI	V65 LARIO 650	650	1986		AGPA31	AGPA31
MOTO GUZZI	V65 NTX 650	650	1987		AGPA31	AGPA31
MOTO GUZZI	V65 SP, CHOPPER 650	650			AGPA31	AGPA31
MOTO GUZZI	750 BREVA	750	2003		AGPA96	AGPA42
MOTO GUZZI	750 NEVADA	750	1991	1992	AGPA194	AGPA194
MOTO GUZZI	750 NEVADA CLASSIC I.E.	750	2006		AGPA96	AGPA42
MOTO GUZZI	750 NEVADA CLUB	750	1998	2001	AGPA194	
MOTO GUZZI	750 NEVADA, NEVADA CLUB	750	2003		AGPA96	AGPA42
MOTO GUZZI	750 TARGA	750	1989		AGPA194	AGPA194
MOTO GUZZI	NEVADA 750	750	1992	1996	AGPA31	
MOTO GUZZI	NEVADA, CLUB/ BASE 750	750	1997	2002	AGPA31	AGPA31
MOTO GUZZI	NTX 750	750	1989		AGPA31	AGPA31
MOTO GUZZI	NTX 750	750	1990			AGPA141
MOTO GUZZI	NTX 750	750	1989		AGPA194	AGPA194
MOTO GUZZI	S3 750 LEFT	750	1975	1976	AGPA141	
MOTO GUZZI	S3 750 RIGHT	750	1975	1976	AGPA141	
MOTO GUZZI	SP 750	750	1991		AGPA141	AGPA141
MOTO GUZZI	TARGA 750	750	1989		AGPA31	AGPA31
MOTO GUZZI	V7 750 CAFE CLASSIC	750	2010		AGPA96	AGPA42
MOTO GUZZI	V7 750 CLASSIC	750	2009	2012	AGPA96	AGPA42
MOTO GUZZI	V7 750 CLUBMAN RACER	750	2010		AGPA96	AGPA42
MOTO GUZZI	V7 750 IPPOGRIFO	750	1997			AGPA194
MOTO GUZZI	V7 750 RACER	750	2011		AGPA96	AGPA42
MOTO GUZZI	V7 750 RACER	750	2012	2014	AGPA96	AGPA28
MOTO GUZZI	V7 750 STONE	750	2012	2014	AGPA96	AGPA28
MOTO GUZZI	V7 II 750 RACER	750	2015		AGPA96	AGPA28
MOTO GUZZI	V7 II 750 SPECIAL	750	2015		AGPA96	AGPA28
MOTO GUZZI	V7 II 750 STONE	750	2015		AGPA96	AGPA28
MOTO GUZZI	V75 750	750	1986		AGPA141	AGPA141
MOTO GUZZI	V75 750 DUNA	750	1986		AGPA141	AGPA141
MOTO GUZZI	V75 750 TT PARIS-DAKAR	750	1986		AGPA141	AGPA141
MOTO GUZZI	850 BREVA	850	2007			AGPA29
MOTO GUZZI	850 GRISO	850	2007			AGPA29
MOTO GUZZI	850 LE MANS	850	1976		AGPA141	AGPA141
MOTO GUZZI	850 NORGE	850	2007			AGPA29
MOTO GUZZI	T 850	850	1974	1976	AGPA141	AGPA141
MOTO GUZZI	T3 850	850	1975		AGPA141	AGPA141
MOTO GUZZI	T4 850	850	1975		AGPA141	AGPA141
MOTO GUZZI	T5 850	850	1975		AGPA141	AGPA141
MOTO GUZZI	T5 850 N.T.	850	1986		AGPA141	AGPA141
MOTO GUZZI	940 CUSTOM	940	2007		AGPA96	AGPA92
MOTO GUZZI	V10 CENTAURO	992	1997	1999		AGPA194
MOTO GUZZI	1000 CALIFORNIA II	1000	1985	1986	AGPA141	AGPA141
MOTO GUZZI	1000 CALIFORNIA III C	1000	1991	1995	AGPA141	AGPA141
MOTO GUZZI	1000 CALIFORNIA III, FUEL INJECTION	1000	1989		AGPA141	AGPA141
MOTO GUZZI	1000 DAYTONA	1000	1991		AGPA32	
MOTO GUZZI	1000 DAYTONA	1000	1991		AGPA141	AGPA141
MOTO GUZZI	1000 LE MANS IV	1000	1985		AGPA141	AGPA141
MOTO GUZZI	1000 LE MANS, V	1000	1990		AGPA141	AGPA141
MOTO GUZZI	1000 QUOTA	1000	1992		AGPA32	AGPP89
MOTO GUZZI	1000 QUOTA	1000	1992	1997		AGPA194
MOTO GUZZI	GT 1000 V	1000	1991		AGPA141	AGPA141
MOTO GUZZI	RS 1000 DAYTONA	1000	1997		AGPA32	AGPA194
MOTO GUZZI	RS DAYTONA 1000	1000	1997			AGPA31
MOTO GUZZI	S 1000	1000	1990		AGPA141	AGPA141
MOTO GUZZI	SP 1000 III	1000	1991		AGPA141	AGPA141
MOTO GUZZI	SP 1000 LE MANS LEFT/REAR	1000	1979		AGPA141	
MOTO GUZZI	SP 1000 LE MANS RIGHT	1000	1979		AGPA141	
MOTO GUZZI	V 1000 STRADA	1000	1993		AGPA141	AGPA31
MOTO GUZZI	V10 1000 CENTAURO	1000	1996		AGPA32	AGPA31
MOTO GUZZI	1100 BREVA	1100	2005	2006		AGPA29
MOTO GUZZI	1100 BREVA (ABS)	1100	2007			AGPA29
MOTO GUZZI	1100 BREVA V1100	1100	2005			AGPA29
MOTO GUZZI	1100 CALIFORNIA	1100	1996		AGPA141	AGPA141
MOTO GUZZI	1100 CALIFORNIA EV	1100	2006		AGPA96	AGPA92
MOTO GUZZI	1100 CALIFORNIA EV (SINGLE PIN PAD FIXING)	1100	1997	2000		AGPA194
MOTO GUZZI	1100 CALIFORNIA EV TOURING	1100	2006		AGPA96	AGPA92
MOTO GUZZI	1100 CALIFORNIA JACKAL	1100	2000		AGPA32	
MOTO GUZZI	1100 CALIFORNIA JACKAL	1100	2000	2001		AGPA92
MOTO GUZZI	1100 CALIFORNIA JACKAL	1100	2001		AGPA96	
MOTO GUZZI	1100 CALIFORNIA JACKAL BASIC	1100	2000	2001		AGPA92
MOTO GUZZI	1100 CALIFORNIA JACKAL BASIC	1100	2000		AGPA32	
MOTO GUZZI	1100 CALIFORNIA JACKAL BASIC	1100	2001		AGPA96	
MOTO GUZZI	1100 CALIFORNIA SPECIAL	1100	1999	2000	AGPA32	
MOTO GUZZI	1100 CALIFORNIA SPECIAL	1100	1999	2001		AGPA92
MOTO GUZZI	1100 CALIFORNIA SPECIAL	1100	2001		AGPA96	
MOTO GUZZI	1100 CALIFORNIA SPECIAL SPORT ALLOY	1100	2002		AGPA96	AGPA92

PASTIGLIE BRAKE PADS

INDICE ANALITICO PASTIGLIE / pads alphabetical index

MARCA Brand	MODELLO Model	CC	DA From	A To	ANT. Front	POST. Rear
MOTO GUZZI	1100 CALIFORNIA STONE METAL	1100	2002		AGPA96	AGPA92
MOTO GUZZI	1100 CALIFORNIA STONE, STONE TOURING	1100	2002		AGPA96	AGPA92
MOTO GUZZI	1100 CALIFORNIA TITANIUM	1100	2003		AGPA96	AGPA92
MOTO GUZZI	1100 CALIFORNIA VINTAGE	1100	2006		AGPA96	AGPA92
MOTO GUZZI	1100 GRISO	1100	2005		AGPA96	AGPA92
MOTO GUZZI	1100 GRISO	1100	2005			AGPA29
MOTO GUZZI	1100 GRISO 8V	1100	2007	2008		AGPA29
MOTO GUZZI	1100 SPORT	1100	1994	1999		AGPA194
MOTO GUZZI	1100 SPORT	1100	1996		AGPA32	
MOTO GUZZI	1100 SPORT CORSA	1100	1998	1999		AGPA194
MOTO GUZZI	1200 GRISO 8V	1100	2007		AGPA96	
MOTO GUZZI	ES 1100 QUOTA	1100	1999		AGPA92	
MOTO GUZZI	ES 1100 QUOTA	1100	1999	2001		AGPA29
MOTO GUZZI	EV 1100 CALIFORNIA	1100	1997	2000	AGPA32	
MOTO GUZZI	EV 1100 CALIFORNIA, 80, TOURING	1100	2001		AGPA96	
MOTO GUZZI	EV CALIFORNIA 1100	1100	1997	2000		AGPA31
MOTO GUZZI	EV CALIFORNIA, 80 TOURING 1100	1100	2001			AGPA31
MOTO GUZZI	SPORT 1100	1100	1996			AGPA31
MOTO GUZZI	V 1100 BREVA	1100	2004		AGPA96	AGPA42
MOTO GUZZI	V 1100 BREVA, ABS	1100	2005	2007	AGPA96	
MOTO GUZZI	V11 , SCURA, SPORT SCURA 1100	1100	2002		AGPA96	AGPA31
MOTO GUZZI	V11 1100 LEMANS (ALL MODELS)	1100	2001	2004		AGPA194
MOTO GUZZI	V11 1100 LEMANS, LEMANS TENNI, LEMANS ROSSO CORSA	1100	2001		AGPA96	
MOTO GUZZI	V11 1100 SCURA / SPORT SCURA	1100	2002			AGPA194
MOTO GUZZI	V11 1100 SPORT	1100	1997	2000	AGPA32	AGPA194
MOTO GUZZI	V11 1100 SPORT (ALL MODELS)	1100	2001			AGPA194
MOTO GUZZI	V11 1100 SPORT ROSSO MANDELL	1100	2001		AGPA96	
MOTO GUZZI	V11 1100 SPORT, SPORT NAKED	1100	2001		AGPA96	
MOTO GUZZI	V11 LEMANS, LEMANS TENNI, LEMANS ROSSO CORSA 1100	1100	2001			AGPA31
MOTO GUZZI	V11 SPORT 1100	1100	1997	2000		AGPA31
MOTO GUZZI	V11 SPORT ROSSO MANDELL 1100	1100	2001			AGPA31
MOTO GUZZI	V11 SPORT, SPORT NAKED 1100	1100	2001			AGPA31
MOTO GUZZI	1200 BREVA	1200	2008			AGPA29
MOTO GUZZI	1200 GRISO 8V	1200	2007			AGPA29
MOTO GUZZI	1200 MGS-01 CORSA (RAD. CAL)	1200	2005			AGPA42
MOTO GUZZI	1200 MGS-01 CORSA (RAD.CAL) 05- HS	1200	2005		AGPA112	
MOTO GUZZI	1200 NORGE	1200	2006		AGPA96	AGPA29
MOTO GUZZI	1200 NORGE GT 8V	1200	2010		AGPA96	AGPA29
MOTO GUZZI	1200 SPORT	1200	2007	2008	AGPA96	
MOTO GUZZI	1200 SPORT 2V	1200	2006	2009		AGPA29
MOTO GUZZI	1200 SPORT 4V	1200	2009	2011	AGPA96	AGPA42
MOTO GUZZI	1200 SPORT 4V	1200	2008	2009		AGPA29
MOTO GUZZI	1200 SPORT 8V	1200	2012		AGPA96	AGPA29
MOTO GUZZI	1200 SPORT 8V SE	1200	2012		AGPA96	
MOTO GUZZI	1200 SPORT ABS	1200	2006	2007		AGPA29
MOTO GUZZI	1200 STELVIO	1200	2008	2011	AGPA96	
MOTO GUZZI	1200 STELVIO (ABS)	1200	2008			AGPA29
MOTO GUZZI	1200 STELVIO 8V SE	1200	2012		AGPA96	
MOTO GUZZI	1200 STELVIO NTX	1200	2009	2011	AGPA96	
MOTO GUZZI	1200 STELVIO NTX (ABS)	1200	2009			AGPA29
MOTO GUZZI	V 1200 BREVA	1200	2008		AGPA96	
MOTO GUZZI	1400 CALIFORNIA CUSTOM	1400	2013		AGPA96	AGPA92
MOTO GUZZI	1400 CALIFORNIA TOURING	1400	2013		AGPA96	AGPA92
MOTO GUZZI	/4 240		1977		AGPA31	
MOTO GUZZI	IPPOGRIFO		1997		AGPA32	
MOTO GUZZI	IPPOGRIFO		1997			AGPA31
MOTO MORINI						
MOTO MORINI	XE COUNTRY 250	250	1988		AGPA31	
MOTO MORINI	350 COGUARO / NEW YORK	350	1990			AGPA194
MOTO MORINI	350 DART	350	1988			AGPA194
MOTO MORINI	350 EXCALIBUR	350	1987		AGPA28	
MOTO MORINI	350 INDIANA	350	1988			AGPA194
MOTO MORINI	350 KANGURO	350	1988		AGPA28	AGPA194
MOTO MORINI	COGUARO 350	350				AGPA31
MOTO MORINI	COGUARO, NEW YORK 350	350	1990			AGPA31
MOTO MORINI	DART 350	350	1988			AGPA31
MOTO MORINI	DART 350	350	1990			AGPA31
MOTO MORINI	INDIANA 350	350	1988			AGPA31
MOTO MORINI	KANGURO 350	350	1988			AGPA31
MOTO MORINI	RLX 350 EXCALIBUR	350	1990			AGPA194
MOTO MORINI	RLX EXCALIBUR 350	350	1990			AGPA31
MOTO MORINI	400 DART	400	1989			AGPA194
MOTO MORINI	400 S	400			AGPA194	AGPA194
MOTO MORINI	DART 400	400	1989	1990		AGPA31
MOTO MORINI	S 400	400			AGPA31	AGPA31
MOTO MORINI	SEI V CLASSIC 500	500	1989		AGPA31	
MOTO MORINI	501 CAMEL	501	1988		AGPA28	AGPA194
MOTO MORINI	501 COGUARO	501	1989			AGPA194
MOTO MORINI	501 EXCALIBUR	501	1989			AGPA194
MOTO MORINI	501 EXCALIBUR	501	1987		AGPA28	
MOTO MORINI	501 NEW YORK	501	1989			AGPA194
MOTO MORINI	CAMEL 501	501	1988			AGPA31
MOTO MORINI	COGUARO 501	501	1989			AGPA31
MOTO MORINI	EXCALIBUR 501	501	1989			AGPA31
MOTO MORINI	NEW YORK 501	501	1989			AGPA31
MOTO MORINI	RLX 501 EXCALIBUR	501	1990			AGPA194
MOTO MORINI	RLX EXCALIBUR 501	501	1990			AGPA31

ACCOSSATO

PASTIGLIE BRAKE PADS

INDICE ANALITICO PASTIGLIE / pads alphabetical index

MARCA Brand	MODELLO Model	CC	DA From	A To	ANT. Front	POST. Rear
MOTO MORINI	650 INDIANA	650	1988			AGPA194
MOTO MORINI	INDIANA 650	650	1988			AGPA31
MOTO MORINI	750 INDIANA	750	1988			AGPA194
MOTO MORINI	INDIANA 750	750	1988			AGPA31
MOTO MORINI	1200 9 1/2	1200	2006		AGPA96	AGPA42
MOTO MORINI	1200 CORSARO	1200	2006		AGPA96	AGPA42
MOTO MORINI	1200 GRANFERRO	1200	2010		AGPA112	AGPA29
MOTO MORINI	1200 GRANPASSO	1200	2008		AGPA92	
MOTO MORINI	1200 GRANPASSO	1200	2008	2010		AGPA29
MOTO MORINI	1200 GT	1200	2010		AGPA92	AGPA29
MOTO MORINI	1200 SCRAMBLER	1200	2009		AGPA92	
MOTO MORINI	1200 SPORT	1200	2008		AGPA96	AGPA42
MOTOR UNION						
MOTOR UNION	HK 250 HAOKE	250	1997		AGPA77	
MOTORHISPANIA						
MOTORHISPANIA	MH 50 URBAN BIKE	50	2006		AGPA20	
MOTORHISPANIA	RX 50 R	50	2008		AGPA142	
MOTORHISPANIA	RX 50 R	50	2008		AGPA175	
MOTORHISPANIA	RX 50 R	50	2008		AGPA221	
MOTORHISPANIA	RX 50 RACING	50	2000		AGPA70	
MOTORHISPANIA	MH7 125 NAKED	125	2008		AGPA142	
MOTORHISPANIA	MH7 125 NAKED	125	2008		AGPA175	
MOTORHISPANIA	MH7 125 Naked	125	2008		AGPA221	
MOTORHISPANIA	RX 125 R	125	2008		AGPA142	
MOTORHISPANIA	RX 125 R	125	2008		AGPA175	
MOTORHISPANIA	RX 125 R	125	2008		AGPA221	
MOTORHISPANIA	RYZ 125 ARENA ENDURO	125	2005		AGPA18	AGPA18
MOTRAN						
MOTRAN	SPIKE 50	50	1998		AGPA13	
MOTRAN	SYNCRO 50	50	1998		AGPA13	
MOTRAN	THUNDER 50	50	1995		AGPA13	
MV AGUSTA						
MV AGUSTA	675 BRUTALE	675	2012		AGPA96	AGPA42
MV AGUSTA	675 F3	675	2013	2015		AGPA42
MV AGUSTA	675 F3	675	2011	2014	AGPA96	
MV AGUSTA	675 F3	675	2015		AGPA106	
MV AGUSTA	675 F3	675	2011	2012		AGPP225
MV AGUSTA	750 BRUTALE, BRUTALE S	750	2001	2005	AGPA124	AGPP225
MV AGUSTA	750 F4 SPR	750	2001		AGPA124	AGPP225
MV AGUSTA	750 F4/F4S	750	1999		AGPA124	AGPP225
MV AGUSTA	800 BRUTALE	800	2013		AGPA96	AGPA42
MV AGUSTA	800 BRUTALE DRAGSTER	800	2015		AGPA96	AGPA42
MV AGUSTA	800 BRUTALE DRAGSTER RR	800	2015		AGPA96	AGPA42
MV AGUSTA	800 BRUTALE RR	800	2015		AGPA96	AGPA42
MV AGUSTA	800 F3	800	2014		AGPA106	AGPP225
MV AGUSTA	800 RIVALE	800	2013		AGPA177	AGPA42
MV AGUSTA	800 STRADALE	800	2015		AGPA177	AGPA42
MV AGUSTA	800 TURISMO VELOCE	800	2014		AGPA177	AGPA42
MV AGUSTA	800 TURISMO VELOCE LUSSO	800	2014		AGPA177	AGPA42
MV AGUSTA	910 BRUTALE	910	2006	2008	AGPA124	AGPP225
MV AGUSTA	910 BRUTALE R	910	2006	2008	AGPA124	AGPP225
MV AGUSTA	910 BRUTALE S	910	2006	2008	AGPA124	AGPP225
MV AGUSTA	920 BRUTALE	920	2012	2014	AGPA96	AGPP225
MV AGUSTA	989 BRUTALE R	989	2009		AGPA96	AGPP225
MV AGUSTA	990 BRUTALE R	990	2010	2011	AGPA96	AGPP225
MV AGUSTA	1000 F4 Mamba	1000	2004	2006	AGPA124	AGPP225

MARCA Brand	MODELLO Model	CC	DA From	A To	ANT. Front	POST. Rear
MV AGUSTA	1000 F4 R	1000	2012			AGPP225
MV AGUSTA	1000 F4 R	1000	2006	2007	AGPA112	AGPP225
MV AGUSTA	1000 F4 R CORSA CORTA	1000	2012		AGPA106	
MV AGUSTA	1000 F4 RC	1000	2015			AGPP225
MV AGUSTA	1000 F4 RR	1000	2012			AGPP225
MV AGUSTA	1000 F4 RR CORSA CORTA	1000	2012		AGPA106	
MV AGUSTA	1000 F4 TAMBURINI	1000	2004	2006	AGPA124	AGPP225
MV AGUSTA	1000 F4S	1000	2004	2006	AGPA124	AGPP225
MV AGUSTA	1078 BRUTALE RR	1078	2009		AGPA106	AGPP225
MV AGUSTA	1078 F4 CC	1078	2008	2011	AGPA106	AGPP225
MV AGUSTA	1078 F4 RR	1078	2008	2011	AGPA106	AGPP225
MV AGUSTA	1090 BRUTALE R	1090	2012		AGPA96	AGPP225
MV AGUSTA	1090 BRUTALE RR	1090	2010		AGPA106	AGPP225
MV AGUSTA	1090 BRUTALE CORSE	1090	2014		AGPA106	AGPP225
MV AGUSTA	ALL MODELS				AGPA141	AGPA141
MZ						
MZ	50 (MUZ) MOSKITO	50	1999		AGPA84	
MZ	125 (MUZ) MOSKITO	125	1999		AGPA84	
MZ	125 MANTIZZ S	125	2007		AGPA79	
MZ	125 ROADSTAR	125			AGPA141	
MZ	125 SM, SX	125	2002		AGPA80	
MZ	125 SPORTSTAR	125	1993		AGPA141	
MZ	ETZ 125	125	1982		AGPA141	
MZ	ETZ 125	125	1985		AGPA141	
MZ	ETZ 150	150	1982		AGPA141	
MZ	ETZ 150	150	1985		AGPA141	
MZ	ETZ 250	250	1982		AGPA141	
MZ	251 (MUZ) SPORTSTAR	251	1996		AGPA141	
MZ	251 SAXON TOUR	251			AGPA141	
MZ	ETZ 251	251	1989		AGPA141	
MZ	ETZ 300 LUX	300	1990		AGPA141	
MZ	ETZ 300 X	300	1988		AGPA141	
MZ	301 (MUZ) SPORTSTAR	301	1996		AGPA141	
MZ	301 SAXON TOUR	301			AGPA141	
MZ	ETZ 301	301	1990		AGPA141	
MZ	500 SAXON COUNTRY	500	1992		AGPA141	
MZ	500 SAXON FUN	500	1992		AGPA141	
MZ	500 SAXON VOYAGER	500			AGPA141	
MZ	500 SILVER STAR CLASSIC	500	1993		AGPA141	
MZ	(MUZ) SKORPION CUP 660	660	1999		AGPA32	AGPA31
MZ	(MUZ) SKORPION REPLICA 660	660	1997		AGPA32	AGPA31
MZ	(MUZ) SKORPION SPORT 660	660	1995		AGPA32	AGPA31
MZ	(MUZ) SKORPION TOUR 660	660	1995		AGPA32	AGPA31
MZ	(MUZ) SKORPION TRAVELLER 660	660	1999		AGPA32	AGPA31
MZ	1000 (MUZ) S	1000	2001	2002	AGPA96	
MZ	1000 (MUZ) S	1000	2003		AGPA223	AGPP143
MZ	1000 (MUZ) SF	1000	2005		AGPA223	AGPP143
MZ	1000 (MUZ) SFX	1000	2007		AGPA223	AGPP143

PASTIGLIE BRAKE PADS

INDICE ANALITICO PASTIGLIE / pads alphabetical index

MARCA Brand	MODELLO Model	CC	DA From	A To	ANT. Front	POST. Rear
MZ	1000 (MUZ) SN	1000	2005		AGPA223	AGPP143
MZ	1000 (MUZ) ST	1000	2007		AGPA223	AGPP143
MZ	S 1000 (MUZ)	1000	2003		AGPA58	
MZ	S 1000 (MUZ)	1000	2001	2002		AGPA22
MZ	SF 1000 (MUZ)	1000	2005		AGPA58	
MZ	SFX 1000 (MUZ)	1000	2007		AGPA58	
MZ	SN 1000 (MUZ)	1000	2005		AGPA58	
MZ	ST 1000 (MUZ)	1000	2007		AGPA58	
MZ / MUZ						
MZ / MUZ	660 MASTIFF 17"	660	1999	2005		AGPA194
MZ / MUZ	660 SKORPION REPLICA	660	1995	2001		AGPA194
MZ / MUZ	660 SKORPION SPORT / CUP	660	1995	2001		AGPA194
MZ / MUZ	660 SKORPION TOUR / TRAVELLER	660	1995	2002		AGPA194
NISSIN						
NISSIN	4 Piston Caliper				AGPA223	
NISSIN	6 PISTON RACING CALIPER				AGPA130	
NORTON						
NORTON	588 F-1 (ROTARY) P55 MODEL	588	1990			AGPA194
NORTON	961 COMMANDO CAFE RACER	961	2011		AGPA112	AGPA42
NORTON	961 COMMANDO SE	961	2010	2012		AGPA42
NORTON	961 COMMANDO SE	961	2010	2011	AGPA96	
NORTON	961 COMMANDO SE	961	2012		AGPA112	
NORTON	961 COMMANDO SF	961	2013		AGPA112	AGPA42
NORTON	961 COMMANDO SF SPORT	961	2011		AGPA96	AGPA42
NORTON	COMMANDER		1990		AGPA141	AGPA141
NORTON	F-1		1990		AGPA32	
NORTON	F-1		1990			AGPA141
NORTON	INTERPOL		1983		AGPA141	AGPA141
NORTON	TT		1992		AGPA32	
NORTON	WANKEL CLASSIC		1988		AGPA141	AGPA141
OSSA						
OSSA	208 I	208	2010		AGPA45	
OSSA	TR 280 I	280	2010			AGPA47
OSSA	TR 280 I EXPLORER	280	2012		AGPA45	AGPA47
OSSA	500 YANQEE	500	1978		AGPA141	AGPA31
PERFORMANCHE MACHINE						
PERFORMANCE MACHINE	125 X 2	125				
PERFORMANCE MACHINE	125 X 4S	125				
PERFORMANCE MACHINE	125 X 4SL	125				
PERFORMANCE MACHINE	112 AGPA130 6B				AGPA130	
PERFORMANCE MACHINE	112 AGPA130 6QC				AGPA130	
PETERSON						
PETERSON	50 HURRICANE	50	1995		AGPA84	
PETERSON	SR 50 RACING	50	1995		AGPA84	
PETERSON	80 HURRICANE	80	1995		AGPA84	
PETERSON	SR 80 RACING	80	1995		AGPA84	
PEUGEOT						
PEUGEOT	50 BUXY (HENGTONG CAL.)	50	1994		AGPA83	

MARCA Brand	MODELLO Model	CC	DA From	A To	ANT. Front	POST. Rear
PEUGEOT	50 CITYSTAR	50	2014			AGPA42
PEUGEOT	50 DJANGO HERITAGE	50	2014		AGPA72	
PEUGEOT	50 KISBEE	50	2010		AGPA83	
PEUGEOT	50 KISBEE RS	50	2011		AGPA83	
PEUGEOT	50 SPEEDAKE (HENGTONG CAL.)	50	1994		AGPA83	
PEUGEOT	50 SPEEDFIGHT 3 (LC)	50	2010			AGPA42
PEUGEOT	50 SPEEDFIGHT 3 RS (LC)	50	2010			AGPA42
PEUGEOT	50 SPEEDFIGHT LC, (HENGTONG CAL.)	50	1996		AGPA83	
PEUGEOT	50 SQUAB (HENGTONG CAL.)	50	1994		AGPA83	
PEUGEOT	50 TREKKER OFFROAD	50	1999		AGPA83	
PEUGEOT	50 Tweet	50	2010	2013	AGPA102	
PEUGEOT	50 Tweet Evo	50	2014		AGPA102	
PEUGEOT	50 Tweet Evo RS	50	2014		AGPA102	
PEUGEOT	50 TWEET RS	50	2010	2012		AGPA17
PEUGEOT	50 Tweet RS	50	2010	2013	AGPA102	
PEUGEOT	50 V-CLIC	50	2008		AGPA84	
PEUGEOT	50 VIVACITY (HENGTONG CAL.)	50	2005		AGPA83	
PEUGEOT	50 Vivacity Sportline	50	2011		AGPA222	
PEUGEOT	BUXI 50	50	1994		AGPA13	
PEUGEOT	CITYSTAR 50	50	2014		AGPA20	
PEUGEOT	ELYSTAR 50	50	2003			AGPA49
PEUGEOT	SPEEDAKE 50	50	1995		AGPA13	
PEUGEOT	XP S6 50 SUPERMOTARD	50	2004		AGPA20	
PEUGEOT	XR 6 50 RACE SPEC	50	2002	2007	AGPA70	
PEUGEOT	XR 7 50	50	2008		AGPA175	
PEUGEOT	SV 80	80	1996		AGPA222	
PEUGEOT	100 VIVACITY (HENGTONG CAL.)	100	2005		AGPA83	
PEUGEOT	125 ACTIVE	125	2013			AGPA42
PEUGEOT	125 CITYSTAR	125	2011		AGPA46	AGPA42
PEUGEOT	125 DJANGO HERITAGE	125	2014		AGPA72	
PEUGEOT	125 SATELIS ABS	125	2004		AGPA72	
PEUGEOT	125 Tweet	125	2010	2013	AGPA102	
PEUGEOT	125 Tweet Evo	125	2014		AGPA102	
PEUGEOT	125 Tweet Evo RS	125	2014		AGPA102	
PEUGEOT	125 Tweet RS	125	2010	2013	AGPA102	
PEUGEOT	125 TWEET RS	125	2010	2012		AGPA17
PEUGEOT	ACTIVE 125	125	2013		AGPA20	
PEUGEOT	CITYSTAR 125	125	2011		AGPA20	
PEUGEOT	ELYSEO 125	125	2000		AGPA20	AGPA49
PEUGEOT	ELYSTAR 125	125	2003		AGPA20	AGPA49
PEUGEOT	GEOPOLIS 125	125	2006		AGPA20	AGPA49
PEUGEOT	JET FORCE COMPRESSOR 125	125	2003		AGPA20	AGPA49
PEUGEOT	LOOXOR 125	125	2003			AGPA49
PEUGEOT	LXR 125	125	2010		AGPA102	
PEUGEOT	RS 125 GEOPOLIS	125	2010		AGPA20	AGPA49
PEUGEOT	SATELIS 125	125	2006		AGPA20	
PEUGEOT	SATELIS 125	125	2004	2006		AGPA49
PEUGEOT	SATELIS ABS 125	125	2004			AGPA49

ACCOSSATO

PASTIGLIE BRAKE PADS

INDICE ANALITICO PASTIGLIE / pads alphabetical index

MARCA Brand	MODELLO Model	CC	DA From	A To	ANT. Front	POST. Rear
PEUGEOT	XPS 125 CT	125	2006		AGPA18	AGPA18
PEUGEOT	150 DJANGO HERITAGE	150	2014		AGPA72	
PEUGEOT	150 ELYSEO	150	2000		AGPA20	AGPA49
PEUGEOT	150 ELYSTAR	150	2003		AGPA20	AGPA49
PEUGEOT	150 Tweet	150	2010	2013	AGPA102	
PEUGEOT	150 Tweet RS	150	2010	2013	AGPA102	
PEUGEOT	150 TWEET RS	150	2010	2012		AGPA17
PEUGEOT	200 CITYSTAR	200	2013		AGPA20	AGPA42
PEUGEOT	LXR 200	200	2010		AGPA102	
PEUGEOT	250 SATELIS (NISSIN CALIPER)	250	2006			AGPA46
PEUGEOT	GEOPOLIS 250	250	2006		AGPA20	AGPA20
PEUGEOT	SATELIS 250	250	2006		AGPA20	AGPA20
PEUGEOT	400 GEOPOLIS (AJP CAL.)	400	2007		AGPA20	AGPA49
PEUGEOT	400 GEOPOLIS RS	400	2008		AGPA72	
PEUGEOT	400 SATELIS I	400	2014		AGPA72	
PEUGEOT	500 SATELIS	500	2006		AGPA42	AGPA42
PEUGEOT	500 SATELIS	500	2007		AGPA72	
PEUGEOT	600 SATELIS ABS	600	2004		AGPA72	AGPA49
PEUGEOT	e-Vivacity		2011		AGPA222	
PGO						
PGO	50 BIG MAX	50	2002		AGPA84	
PGO	50 BIG MAX SPORT	50	1996		AGPA84	
PGO	50 BUGRIDER	50	2006			AGPA88
PGO	50 COMET	50	1993		AGPA84	
PGO	50 DR. BIG	50	2001		AGPA102	
PGO	50 EPS	50	1996		AGPA84	
PGO	50 G-MAX	50	2006		AGPA102	
PGO	50 HOT	50	1997		AGPA84	
PGO	50 LIBRA	50	2010		AGPA102	
PGO	50 LIGERO	50	2006		AGPA102	
PGO	50 MEGA	50	1996		AGPA84	
PGO	50 TORNADO	50	1996		AGPA84	
PGO	50 T-REX	50	1999		AGPA102	
PGO	50 X-RIDER	50	2003			AGPA82
PGO	G-MAX DOPPLER 50	50	2006		AGPA31	
PGO	PMS 50	50	1999		AGPA102	
PGO	PMX 50	50	1997		AGPA84	
PGO	PMX 50 NAKED	50	2006		AGPA102	
PGO	PMX 50 SPORT	50	2001		AGPA102	
PGO	RODOSHOW 50	50	2001		AGPA14	
PGO	80 BIG MAX	80	1994		AGPA84	
PGO	90 BIG MAX	90	1997		AGPA84	
PGO	90 TORNADO	90	2000		AGPA84	
PGO	RODOSHOW 90	90	2002		AGPA14	
PGO	100 BIG MAX	100	1996		AGPA84	
PGO	100 MY BUBU	100	2002		AGPA102	
PGO	110 T-REX	110	1999		AGPA102	
PGO	PMX 110	110	2000		AGPA84	
PGO	125 CHARGE A, B	125	2002		AGPA102	
PGO	125 I-CHARGE FUEL INJECTION	125	2003		AGPA80	
PGO	125 KUNG FU CT	125				AGPA84
PGO	125 LIGERO	125	2006		AGPA102	
PGO	125 MY BUBU, YOUNG BUBU	125	2002		AGPA102	
PGO	125 TORNADO	125	1996		AGPA84	
PGO	125 T-REX (2 STROKE)	125	1999		AGPA102	
PGO	125 T-REX (4 STROKE)	125	1999		AGPA102	
PGO	125 X-RIDER	125	2003			AGPA82
PGO	150 TR3	150	2002		AGPA102	
PGO	150 T-REX	150	2001		AGPA102	
PGO	150 X-RIDER	150	2003			AGPA82
PGO	BR 150 BUGXTER	150	2005			AGPA88
PGO	250 G-MAX	250	2006		AGPA32	
PGO	500 BUG	500	2008			AGPA173
PGO	BR 500 I RACER	500	2007			AGPA173
PGO	I-DEP		2009		AGPA102	
PIAGGIO						
PIAGGIO	50 ET2	50	1997	2002	AGPA17	
PIAGGIO	50 ET4	50	2000		AGPA17	
PIAGGIO	50 FLY	50	2005		AGPA46	
PIAGGIO	50 LX 2T/4T	50	2005		AGPA17	
PIAGGIO	50 S 2T	50	2007		AGPA17	
PIAGGIO	50 S 4T	50	2009		AGPA17	
PIAGGIO	50 ZIP & ZIP	50	1994		AGPA14	
PIAGGIO	FLY 50	50	2005		AGPA20	
PIAGGIO	LIBERTY 50	50	1997		AGPA17	
PIAGGIO	LIBERTY 50 4T	50	2000		AGPA17	
PIAGGIO	NRG 50	50	1994	1996	AGPA13	
PIAGGIO	NRG 50 MC2	50	1996		AGPA13	
PIAGGIO	NRG 50 MC2 DD	50	1998		AGPA13	
PIAGGIO	NRG 50 MC3	50	2005		AGPA13	
PIAGGIO	NRG 50 POWER DD	50	2004	2005	AGPA13	
PIAGGIO	NRG 50 PUREJET	50	2002	2004	AGPA13	
PIAGGIO	NTT 50	50	1995	1996	AGPA13	
PIAGGIO	PRIMAVERA 50	50	2014		AGPA20	
PIAGGIO	QUARTZ 50	50	1992		AGPA27	
PIAGGIO	SPRINT 50	50	2015		AGPA20	
PIAGGIO	TPH 50 2T	50	2011		AGPA20	
PIAGGIO	ZIP 50 FAST RIDER	50	1993	1995	AGPA13	
PIAGGIO	ZIP DISCO 50	50	1996		AGPA17	
PIAGGIO	ZIP FAST RIDER 50	50	1996		AGPA17	
PIAGGIO	ZIP RST 50	50	1998	1999	AGPA17	
PIAGGIO	ZIP SPORT PRODUCTION 50	50	1996		AGPA17	
PIAGGIO	SKIPPER 80	80	1993	1995	AGPA27	
PIAGGIO	100 ZIP	100	2006	2010	AGPA46	
PIAGGIO	FLY 100	100	2007		AGPA20	
PIAGGIO	ZIP 100	100	2007		AGPA20	
PIAGGIO	125 946	125	2014			AGPP41
PIAGGIO	125 BEVERLY (HENGTONG CALIPER)	125	2002	2006	AGPA46	AGPA46
PIAGGIO	125 BEVERLY / S	125	2007		AGPA46	AGPA46
PIAGGIO	125 BEVERLY TOURER	125	2008	2009	AGPA46	AGPA46
PIAGGIO	125 CARNABY	125	2007	2009	AGPA46	AGPA46
PIAGGIO	125 ET4	125	1996	2000	AGPA17	
PIAGGIO	125 FLY	125	2005	2009	AGPA46	
PIAGGIO	125 MP3	125	2006	2008	AGPA17	
PIAGGIO	125 MP3	125	2006	2007		AGPP161
PIAGGIO	125 SFERA	125	1995		AGPA17	
PIAGGIO	125 X7	125	2008		AGPA46	
PIAGGIO	125 X8	125	2004			AGPA42
PIAGGIO	125 X8	125	2005	2010		AGPP161
PIAGGIO	125 X8	125	2004	2005	AGPA46	
PIAGGIO	125 X9	125	2001	2003	AGPA42	AGPA42
PIAGGIO	125 X9	125	2004	2005	AGPA46	

PASTIGLIE BRAKE PADS

INDICE ANALITICO PASTIGLIE / pads alphabetical index

MARCA Brand	MODELLO Model	CC	DA From	A To	ANT. Front	POST. Rear
PIAGGIO	125 X9 EVO (HENGTONG CALIPER)	125	2006		AGPA46	
PIAGGIO	125 X9 EVOLUTION LEFT/REAR	125	2006			AGPA42
PIAGGIO	125 X9 LEFT/ REAR	125	2004			AGPA42
PIAGGIO	125 XEVO	125	2008		AGPA46	
PIAGGIO	125 ZIP II 4T	125	2000		AGPA17	
PIAGGIO	946 125	125	2014		AGPA20	
PIAGGIO	BEVERLY 125	125	2002		AGPA20	AGPA20
PIAGGIO	CARNABY 125	125	2008		AGPA20	AGPA20
PIAGGIO	FLY 125	125	2005		AGPA20	
PIAGGIO	GT 125 L	125	2004		AGPA20	
PIAGGIO	GT 125 L	125	2004		AGPA46	AGPP41
PIAGGIO	GTS 125	125	2007		AGPA20	
PIAGGIO	GTS 125	125	2007		AGPA46	AGPP41
PIAGGIO	GTS 125 SUPER	125	2010	2013	AGPA20	AGPP41
PIAGGIO	GTS 125 SUPER I.E.	125	2015		AGPA20	AGPP41
PIAGGIO	GTS 125 SUPERSPORT	125	2013		AGPA20	AGPP41
PIAGGIO	GTV 125	125	2008		AGPA20	
PIAGGIO	GTV 125	125	2008		AGPA46	AGPP41
PIAGGIO	GTX 125 SUPER HEXAGON (HENGTONG CALIPER) 11'	125	2000		AGPA46	
PIAGGIO	GTX 125 SUPER HEXAGON (HENGTONG CALIPER) 12'	125	2000		AGPA46	
PIAGGIO	GTX 125 SUPERHEXAGON (GRIMECA CAL.) (11"WHEELS)	125	2000			AGPP41
PIAGGIO	GTX 125 SUPERHEXAGON (HENGTONG CAL.) (11"WHEELS)	125	2000		AGPA20	AGPP41
PIAGGIO	GTX 125 SUPERHEXAGON (HENGTONG CAL.) (12"WHEELS)	125	2001		AGPA20	AGPP41
PIAGGIO	HEXAGON 125	125	1994		AGPA13	
PIAGGIO	LX 125 4T	125	2005		AGPA17	
PIAGGIO	MP3 125	125	2008			AGPA100
PIAGGIO	PRIMAVERA 125	125	2014		AGPA20	
PIAGGIO	PX 125	125	2002		AGPA17	
PIAGGIO	S 125 4T	125	2007		AGPA17	
PIAGGIO	SKIPPER 125	125	1993	1995	AGPA27	
PIAGGIO	X10 EXECUTIVE LEFT/REAR 125	125	2013		AGPA20	AGPA20
PIAGGIO	X10 EXECUTIVE RIGHT 125	125	2013		AGPA100	
PIAGGIO	X7 125	125	2008		AGPA20	AGPA100
PIAGGIO	X8 125	125	2004	2005	AGPA20	
PIAGGIO	X9 EVOLUTION LEFT/REAR 125	125	2006		AGPA20	
PIAGGIO	X9 EVOLUTION RIGHT 125	125	2006		AGPA100	
PIAGGIO	X9 LEFT/REAR 125	125	2004		AGPA20	
PIAGGIO	X9 RIGHT 125	125	2004		AGPA100	
PIAGGIO	XEVO 125	125	2008		AGPA20	AGPA100
PIAGGIO	150 ET4	150	2002		AGPA17	
PIAGGIO	150 FLY	150	2005	2009	AGPA46	
PIAGGIO	150 LIBERTY	150	1999		AGPA17	
PIAGGIO	150 X8 STREET	150	2006		AGPA46	
PIAGGIO	FLY 150	150	2006		AGPA20	
PIAGGIO	HEXAGON 150	150	1994	1999	AGPA13	
PIAGGIO	LIBERTY 150 LE	150	1999	2002	AGPA17	
PIAGGIO	PRIMAVERA 150	150	2014		AGPA20	
PIAGGIO	PX 150	150	2002		AGPA17	
PIAGGIO	SKIPPER 150	150	1993		AGPA27	
PIAGGIO	X8 STREET 150	150	2006		AGPA20	
PIAGGIO	180 X9	180	2002		AGPA42	AGPA42
PIAGGIO	GTX 180 SUPER HEXAGON (HENGTONG CALIPER) 11'	180	2000		AGPA46	
PIAGGIO	GTX 180 SUPER HEXAGON (HENGTONG CALIPER) 12'	180	2001		AGPA46	
PIAGGIO	GTX 180 SUPERHEXAGON (GRIMECA CAL.) (11"WHEELS)	180	2000			AGPP41
PIAGGIO	GTX 180 SUPERHEXAGON (HENGTONG CAL.) (11"WHEELS)	180	2000		AGPA20	AGPP41
PIAGGIO	GTX 180 SUPERHEXAGON (HENGTONG CAL.) (12"WHEELS)	180	2001		AGPA20	AGPP41
PIAGGIO	200 BEVERLY (HENGTONG CALIPER)	200	2002	2006	AGPA46	AGPA46
PIAGGIO	200 CARNABY	200	2008		AGPA46	AGPA46
PIAGGIO	200 LIBERTY	200	2006		AGPA17	
PIAGGIO	200 X8	200	2004		AGPA46	AGPA42
PIAGGIO	200 X8	200	2005		AGPA46	AGPP161
PIAGGIO	200 X9	200	2003		AGPA42	AGPA42
PIAGGIO	BEVERLY 200	200	2002		AGPA20	AGPA20
PIAGGIO	BV 200	200	2002	2005	AGPA20	AGPA20
PIAGGIO	BV 200	200	2002	2004	AGPA46	AGPA46
PIAGGIO	BV 200	200	2005		AGPA46	
PIAGGIO	CARNABY 200	200	2008		AGPA20	AGPA20
PIAGGIO	GT 200 L	200	2004		AGPA46	AGPP41
PIAGGIO	GT L 200	200	2004		AGPA20	
PIAGGIO	GTS 250 VESPA ABS	200	2506		AGPA46	
PIAGGIO	PX 200	200	2002		AGPA17	
PIAGGIO	X8 200	200	2004	2005	AGPA20	
PIAGGIO	250 BEVERLY	250	2007		AGPA46	AGPA46
PIAGGIO	250 GT 60	250	2006		AGPA46	AGPP41
PIAGGIO	250 LX 60	250	2006		AGPA17	
PIAGGIO	250 MP3	250	2006	2007		AGPP161
PIAGGIO	250 X7	250	2008		AGPA46	
PIAGGIO	250 X8	250	2005		AGPA46	
PIAGGIO	250 X8	250	2006			AGPP161
PIAGGIO	250 X9	250	2000	2004	AGPA42	AGPA42
PIAGGIO	250 X9	250	2005		AGPA46	
PIAGGIO	250 X9 LEFT/ REAR	250	2005			AGPP161
PIAGGIO	250 XEVO	250	2008		AGPA46	
PIAGGIO	BEVERLY 250	250	2007		AGPA20	AGPA20
PIAGGIO	BV 250	250	2006		AGPA20	AGPA20
PIAGGIO	BV 250	250	2006		AGPA46	AGPA46
PIAGGIO	GT 250 60	250	2006		AGPA20	
PIAGGIO	GTS 250 ABS	250	2006		AGPA20	AGPP41
PIAGGIO	GTV 250	250	2008		AGPA20	AGPP41

ACCOSSATO

PASTIGLIE BRAKE PADS

INDICE ANALITICO PASTIGLIE / pads alphabetical index

MARCA Brand	MODELLO Model	CC	DA From	A To	ANT. Front	POST. Rear
PIAGGIO	GTV 250	250	2008		AGPA46	
PIAGGIO	GTX 250 SUPER HEXAGON	250	2001			AGPP41
PIAGGIO	MP3 250	250	2008		AGPA17	AGPA100
PIAGGIO	MP3 250	250	2006	2007	AGPA17	
PIAGGIO	X7 250	250	2008		AGPA20	AGPA100
PIAGGIO	X8 250	250	2006		AGPA20	
PIAGGIO	X9 250	250	2005		AGPA20	
PIAGGIO	X9 RIGHT 250	250	2005		AGPA100	
PIAGGIO	XEVO 250	250	2008		AGPA20	AGPA100
PIAGGIO	300 BEVERLY TOURER	300	2007		AGPA46	AGPA46
PIAGGIO	300 CARNABY CRUISER	300	2010		AGPA46	AGPA46
PIAGGIO	BEVERLY I.E. 300	300	2011		AGPA20	AGPA100
PIAGGIO	BEVERLY TOURER 300	300	2007		AGPA20	AGPA20
PIAGGIO	CARNABY CRUISER 300	300	2010		AGPA20	AGPA20
PIAGGIO	GTS 300 I.E.	300	2012		AGPA20	AGPP41
PIAGGIO	GTS 300 SUPER	300	2009		AGPA20	AGPP41
PIAGGIO	GTS 300 SUPER SPORT I.E.	300	2011		AGPA20	AGPP41
PIAGGIO	GTS 300 TOURING I.E.	300	2011	2012	AGPA20	AGPP41
PIAGGIO	GTS 300 VESPA SUPER	300	2009		AGPA46	
PIAGGIO	GTV 300 I.E.	300	2011		AGPA20	AGPP41
PIAGGIO	MP3 300	300	2010		AGPA17	AGPA100
PIAGGIO	MP3 300 YOURBAN IE	300	2015		AGPA17	AGPA100
PIAGGIO	X7 300 IE	300	2010		AGPA46	
PIAGGIO	X7 EVO I.E. 300	300	2011		AGPA20	AGPA100
PIAGGIO	350 BEVERLY SPORT TOURING IE ABS	350	2012		AGPA99	AGPA100
PIAGGIO	BEVERLY S 350	350	2014		AGPA20	AGPA100
PIAGGIO	BEVERLY SPORT TOURING IE 350	350	2012			AGPA100
PIAGGIO	BV 350	350	2012		AGPA20	AGPA100
PIAGGIO	X10 EXECUTIVE LEFT/REAR 350	350	2013		AGPA20	AGPA20
PIAGGIO	X10 EXECUTIVE RIGHT 350	350	2013		AGPA100	
PIAGGIO	400 BEVERLY IE	400	2007		AGPA29	AGPA46
PIAGGIO	400 MP3 IE	400	2007		AGPA17	AGPA46
PIAGGIO	400 MP3 LT	400	2009		AGPA17	AGPA46
PIAGGIO	400 X8	400	2007		AGPA46	AGPA46
PIAGGIO	400 XEVO	400	2008		AGPA46	AGPA46
PIAGGIO	MP3 I.E. 400	400	2007		AGPA20	
PIAGGIO	MP3 LT 400	400	2009		AGPA20	
PIAGGIO	X8 LEFT/REAR 400	400	2007		AGPA20	AGPA20
PIAGGIO	X8 RIGHT 400	400	2007		AGPA100	
PIAGGIO	XEVO LEFT/ REAR 400	400	2008		AGPA20	AGPA20
PIAGGIO	XEVO RIGHT 400	400	2008		AGPA100	
PIAGGIO	500 BEVERLY CRUISER	500	2008		AGPA42	AGPA42
PIAGGIO	500 X9	500	2001	2003	AGPA42	AGPA42
PIAGGIO	500 X9 EVO	500	2003	2006	AGPA29	
PIAGGIO	500 X9 EVO ABS	500	2004		AGPA29	
PIAGGIO	500 X9 EVOLUTION	500	2004			AGPA42
PIAGGIO	500 X9 EVOLUTION ABS	500	2004			AGPA42
PIAGGIO	BV 500	500	2006		AGPA42	AGPA42
PIAGGIO	MP3 500	500	2010		AGPA20	
PIAGGIO	MP3 500	500	2010		AGPA17	
PIAGGIO	X10 EXECUTIVE LEFT/REAR 500	500	2013		AGPA20	AGPA20
PIAGGIO	X10 EXECUTIVE RIGHT 500	500	2013		AGPA100	
POLARIS						
POLARIS	200 PHOENIX	200	2005	2009	AGPA82	
POLARIS	200 PHOENIX	200	2005	2010		AGPA98
POLARIS	200 SAWTOOTH	200	2006		AGPA82	AGPA82
POLARIS	250 2X4, 4X4	250	1990		AGPA189	
POLARIS	250 2X4, 4X4	250	1993		AGPA189	
POLARIS	250 BIG BOSS 4X6, 6X6	250	1989	1993	AGPA189	
POLARIS	250 TRAIL BLAZER	250	1994	1999	AGPA189	
POLARIS	250 TRAIL BOSS	250	1988	1990	AGPA190	
POLARIS	250 TRAIL BOSS	250	1991	1999	AGPA189	
POLARIS	250 TRAIL BOSS 2X4, 4X4	250	1991	1992	AGPA189	
POLARIS	250 XPLORER 4X4	250	2000		AGPA189	
POLARIS	300 2X4, 4X4	300	1994	1995	AGPA189	
POLARIS	300 BIG BOSS 6X6	300	1994		AGPA189	
POLARIS	300 HAWKEYE 2X4, 4X4	300	2007		AGPA189	AGPA189
POLARIS	300 SPORTSMAN 4X4	300	2008		AGPA190	AGPA190
POLARIS	300 XPLORER 4X4	300	1996		AGPA189	
POLARIS	300 XPRESS 2X4	300	1998		AGPA189	
POLARIS	300 XPRESS L	300	1996	1997	AGPA189	
POLARIS	325 MAGNUM 2X4, 4X4	325	2000	2002	AGPA189	
POLARIS	325 TRAIL BOSS	325	2000	2002	AGPA189	
POLARIS	325 XPEDITION	325	2000	2002	AGPA190	
POLARIS	330 ATP	330	2006		AGPA189	
POLARIS	330 ATP	330	2004	2005	AGPA189	AGPA189
POLARIS	330 E TRAIL BLAZER	330	2008		AGPA190	
POLARIS	330 MAGNUM 2X4, 4X4	330	2003		AGPA189	
POLARIS	330 TRAIL BOSS	330	2003		AGPA189	
POLARIS	335 SPORTSMAN 4X4 -	335	1999		AGPA189	
POLARIS	350 BIG BOSS	350	1993		AGPA189	
POLARIS	350 L 2X4, 4X4	350	1990		AGPA189	
POLARIS	350 L 4X4	350	1993		AGPA189	
POLARIS	350 SPORTSMAN 4X4	350	1993		AGPA189	
POLARIS	350 TRAIL BOSS L 2X4	350	1991	1993	AGPA189	
POLARIS	400 BIG BOSS L 6X6	400	1996		AGPA189	
POLARIS	400 L 2X4	400	1994	1995	AGPA189	
POLARIS	400 SCRAMBLER 2X4, 4X4	400	2000		AGPA189	
POLARIS	400 SCRAMBLER 4X4	400	1998	1999	AGPA189	

PASTIGLIE BRAKE PADS

INDICE ANALITICO PASTIGLIE / pads alphabetical index

MARCA Brand	MODELLO Model	CC	DA From	A To	ANT. Front	POST. Rear
POLARIS	400 SCRAMBLER L 4X4	400	1995	1997	AGPA189	
POLARIS	400 SPORT	400	1999	2000	AGPA189	
POLARIS	400 SPORT L -	400	1994	1998	AGPA189	
POLARIS	400 SPORTSMAN	400	2001		AGPA189	
POLARIS	400 SPORTSMAN L 4X4 -	400	1994	1997	AGPA189	
POLARIS	400 TRAIL BLAZER	400	2003		AGPA189	
POLARIS	400 XPLORER L 4X4	400	1995	2000	AGPA189	
POLARIS	400 XPRESS L	400	1996	1997	AGPA189	
POLARIS	425 2X4, 4X4 MAGNUM	425	1995	1998	AGPA189	AGPA189
POLARIS	425 MAGNUM 6X6	425	1996		AGPA189	
POLARIS	425 XPEDITION 4X4	425	2000		AGPA189	
POLARIS	450 OUTLAW MXR	450	2009			AGPA190
POLARIS	450 OUTLAW S	450	2008			AGPA190
POLARIS	450 SPORTSMAN	450	2006		AGPA189	
POLARIS	455 DIESEL EBS 4X4	455	1999		AGPA189	
POLARIS	500 ATP HO	500	2004		AGPA189	AGPA189
POLARIS	500 BIG BOSS 6X6	500	1998	1999	AGPA189	
POLARIS	500 E SCRAMBLER 2X4, 4X4	500	2008		AGPA190	
POLARIS	500 MAGNUM 2X4, 4X4	500	2002		AGPA189	
POLARIS	500 MAGNUM 4X4	500	2000	2001	AGPA189	
POLARIS	500 OUTLAW	500	2006		AGPA189	
POLARIS	500 PREDATOR	500	2003		AGPA189	AGPA189
POLARIS	500 PREDATOR E	500	2006		AGPA189	AGPA189
POLARIS	500 RANGER 6X6	500	2000	2002	AGPA189	
POLARIS	500 REVOLVER	500	2006		AGPA190	AGPA190
POLARIS	500 SCRAMBLER 2X4	500	2001		AGPA189	
POLARIS	500 SCRAMBLER 4X4	500	1997	1998	AGPA189	
POLARIS	500 SPORTSMAN 4X4	500	1996		AGPA189	
POLARIS	500 SPORTSMAN 6X6	500	2000		AGPA189	
POLARIS	500 SPORTSMAN EBS 4X4	500	1998		AGPA189	
POLARIS	500 SPORTSMAN HO (FROM 16.12.2008)	500	2009		AGPA190	
POLARIS	500 SPORTSMAN HO (TO 15.12.2008)	500	2003	2008	AGPA190	
POLARIS	500 XPLORER 4X4	500	1997		AGPA189	
POLARIS	525 OUTLAW	525	2007			AGPA190
POLARIS	525 OUTLAW IRS	525	2008			AGPA190
POLARIS	525 OUTLAW S	525	2008			AGPA190
POLARIS	570 RANGER RZR EFI	570	2012			AGPA190
POLARIS	600 SPORTSMAN	600	2003		AGPA190	
POLARIS	700 SPORTSMAN	700	2002		AGPA190	
POLARIS	SPORTSMAN MV 700	700	2005		AGPA190	
POLARIS	800 RANGER RZR EFI	800	2008			AGPA190
POLARIS	800 RANGER RZR S EFI	800	2009			AGPA190
POLARIS	800 RZR	800	2008			AGPA190
POLARIS	800 SPORTSMAN (FROM 16.12.2008)	800	2009		AGPA190	
POLARIS	800 SPORTSMAN (TO 15.12.2008)	800	2005	2008	AGPA190	
POLARIS	TRAIL BLAZER		1990	1993	AGPA189	
POLARIS	TRAIL BOSS 2X4, 4X4		1988	1989	AGPA189	
POLINI						
POLINI	CROSS 50	50	1999		AGPA34	AGPA34
POLINI	X1 50 R	50	2004		AGPA159	AGPA159
POLINI	X3 50 R	50	2004		AGPA159	AGPA159
POLINI	X5 65 RP	65	2005		AGPA159	AGPA159
PRAGA						
PRAGA	ED 250	250	1999		AGPA29	AGPP91
PRAGA	CD 610	610	1999		AGPA29	AGPP91
PUCH						
PUCH	CONDOR	50	1990		AGPA18	
PUCH	TZX 50	50	1992		AGPA18	
PUCH	COBRA 75	75	1985		AGPA18	
PUCH	MAXI 80	80	1988			AGPA31
PVM						
PVM	4 PAD CALIPER				AGPA134	
PVM	4 Piston Caliper - Racing				AGPA208	
PVM	6 Piston Caliper - Racing				AGPA202	
QUINGO						
QUINGO	QM 125 2V	125	2002		AGPA22	
QUINGO	QM 125 GY	125	2002		AGPA80	
RACING CALIPERS						
RACING CALIPERS	MINIMOTO TIPO CS RACING				AGPA34	
RACING CALIPERS	MINIMOTO TIPO GRC				AGPA34	
RACING CALIPERS	MINIMOTO TIPO POLINI				AGPA34	
REVTECH						
REVTECH	WILWOOD CALIPER FRONT/REAR				AGPA32	
REWACO						
REWACO	FX4		2007		AGPA31	
REWACO	FX5		2007		AGPA31	
REWACO	FX6		2007		AGPA31	
REWACO	HS4		2001		AGPA31	
REWACO	HS5		2001		AGPA31	
REWACO	HS6		2001		AGPA31	
REWACO	RF1		2007		AGPA31	
RIEJU						
RIEJU	NKD 50	50	2004	2007	AGPA48	
RIEJU	50 RACING SPEC. EDITION	50	2001		AGPA70	
RIEJU	50 SPIKE RACING	50	2002		AGPA70	
RIEJU	50 Spike X	50	2008		AGPA221	AGPA221
RIEJU	50 TANGO	50	2008			AGPA42
RIEJU	50 TANGO	50	2010		AGPA42	
RIEJU	DRAC 50	50	1997		AGPA18	AGPA18
RIEJU	DRAG 50	50	1992		AGPA16	
RIEJU	FD4 50 SUPER MARATON	50	1985		AGPA18	
RIEJU	MRT 50	50	2009		AGPA221	AGPA221
RIEJU	MRT 50 PRO	50	2009		AGPA42	AGPA42
RIEJU	MRT 50 PRO SUPERMOTARD	50	2009		AGPA42	AGPA42
RIEJU	MRT 50 Supermotard	50	2008		AGPA221	AGPA221

ACCOSSATO

PASTIGLIE BRAKE PADS

INDICE ANALITICO PASTIGLIE / pads alphabetical index

MARCA Brand	MODELLO Model	CC	DA From	A To	ANT. Front	POST. Rear
RIEJU	MRX 50 PRO	50	2005		AGPA70	
RIEJU	RR 50 SUPERMOTARD	50	1996		AGPA18	AGPA18
RIEJU	RRX 50	50	2010		AGPA221	AGPA221
RIEJU	RS1 50	50	1992		AGPA16	AGPA18
RIEJU	RS2 50	50	2012		AGPA48	
RIEJU	RS2 50 MATRIX	50	2003		AGPA48	AGPA49
RIEJU	RS3 50 PRO	50	2012		AGPA175	
RIEJU	RV 50	50			AGPA18	
RIEJU	SMX 50	50	2002		AGPA70	
RIEJU	SMX 50 PRO	50	2008		AGPA42	
RIEJU	TANGOO 50	50	2010			AGPA18
RIEJU	K6 75, LC STRADA	75	1987		AGPA18	
RIEJU	P6 75, LC STRADA	75	1987		AGPA18	
RIEJU	MR 80 C, E	80	1988		AGPA18	
RIEJU	MR 80 CROSS	80	1987		AGPA18	
RIEJU	MR 80 ENDURO	80	1987		AGPA18	
RIEJU	RST 80	80	1991		AGPA18	AGPA18
RIEJU	125 MARATHON PRO	125	2009		AGPA42	
RIEJU	125 Marathon Pro	125	2009		AGPA221	
RIEJU	125 MARATHON PRO SUPERMOTARD	125	2009		AGPA42	
RIEJU	125 Marathon Pro Supermotard 9	125	2009		AGPA221	
RIEJU	125 TANGO	125	2008		AGPA42	
RIEJU	125 TANGO	125	2006		AGPA142	
RIEJU	125 TANGO	125	2006		AGPA175	
RIEJU	125 TANGO PRO	125	2008		AGPA42	
RIEJU	MRX 125	125	2003		AGPA70	AGPA18
RIEJU	MRX 125	125	2003		AGPA18	AGPA18
RIEJU	RR 125	125	1997		AGPA18	AGPA18
RIEJU	RS2 125 NKD	125	2006		AGPA160	AGPA82
RIEJU	RS2 125 PRO	125	2008		AGPA158	AGPA82
RIEJU	RS3 125	125	2010		AGPA175	AGPA18
RIEJU	RS3 125	125	2010		AGPA142	
RIEJU	SMX 125	125	2003		AGPA70	AGPA18
RIEJU	SMX 125	125	2003		AGPA18	AGPA18
RIEJU	TANGO 125	125	2006			AGPA18
RIEJU	TANGO 125	125	2008			AGPA18
RIEJU	TANGO PRO 125	125	2008			AGPA18
RIEJU	250 TANGO	250	2008		AGPA42	AGPA18
RIEJU	MRX 250 MARATHON	250	2010			AGPP80
RIEJU	RS350 PRO	350	2012		AGPA142	
RIEJU	MRX 450 MARATHON	450	2008			AGPP80
RIZZATO						
RIZZATO	ATALA HACKER 50	50	1995		AGPA13	
ROXON						
ROXON	150 QUAD SPORT SPIRIT	150	2006			AGPA82
ROYAL ENFIELD						
ROYAL ENFIELD	535 Continental GT	535	2014		AGPA92	AGPP91
SACHS						
SACHS	50 MADASS	50	2004		AGPA79	
SACHS	50 MADASS 4T	50	2005		AGPA79	
SACHS	SW LOTUS 80	80			AGPA31	
SACHS	125 ROADSTER V2	125	2001		AGPA28	
SACHS	125 X-ROAD	125	2005		AGPA32	
SACHS	XTC 125	125	1999		AGPA32	
SACHS	XTC-N 125	125	1999		AGPA32	
SACHS	ZX 125	125	1999		AGPA28	
SACHS	ZZ 125	125	1999		AGPA28	
SACHS	500 MADASS	500	2005		AGPA32	
SACHS	650 ROADSTER V1.6	650	2001		AGPA32	
SACHS	800 B-805	800	2002		AGPA32	
SACHS	800 ROADSTER V2	800	2000		AGPA32	
SACHS	800 S-805	800	2003		AGPA32	
SANGLAS						
SANGLAS	400 Y	400	1979	1980	AGPA194	AGPA194
SANGLAS	Y 400	400	1979	1980	AGPA31	AGPA31
SANGLAS	500 S2	500	1979	1980	AGPA194	AGPA194
SANGLAS	S2 500	500	1979	1980	AGPA31	AGPA31
SCORPA						
SCORPA	SY 115 F TRIAL	115	2006		AGPA45	AGPA47
SCORPA	TY-S 115 F TRIAL	115	2006		AGPA18	AGPA47
SCORPA	SY 125 F TRIAL	125	2006		AGPA45	AGPA47
SCORPA	TY-S 125 F TRIAL	125	2006		AGPA18	AGPA47
SCORPA	SY 250 F TRIAL	250	2006		AGPA45	AGPA47
SCORPA	SY 250 TRIAL	250	2000		AGPA45	AGPA47
SCORPA	T-RIDE 250	250	2008		AGPA49	
SCORPA	T-RIDE 250	250	2008		AGPA212	
SHE-LUNG						
SHE-LUNG	50 FALCON	50	1997		AGPA84	
SHE-LUNG	50 RACER	50	1996		AGPA14	
SHE-LUNG	125 MARS	125	1997		AGPA84	
SHERCO						
SHERCO	50 SUPERMOTARD, ENDURO	50	2002	2006	AGPA70	
SHERCO	SE 50 ENDURO	50	2007		AGPA20	AGPA49
SHERCO	SM 50 SUPERMOTARD	50	2007		AGPA20	AGPA49
SHERCO	80 0,8	80	2001		AGPA18	AGPA18
SHERCO	125	125	2002			AGPA18
SHERCO	CITY CORP 125 4T ENDURO	125	2003			AGPA18
SHERCO	CITY CORP 125 4T SM	125	2003			AGPA18
SHERCO	SE 125 1.25F	125	2010		AGPA49	
SHERCO	ST 125 1.25	125	2006		AGPA45	AGPA47
SHERCO	ST 125 1.25	125	2001	2005	AGPA18	AGPA18
SHERCO	ST 200 2.0	200	2001		AGPA18	AGPA18
SHERCO	250 ENDURO 2.5I (4T) INC. SE MODELS	250	2008	2010	AGPA29	
SHERCO	250 SM 2.5I SUPERMOTARD (4T)	250	2008		AGPA29	
SHERCO	250 SX 2.5I F MOTO CROSS	250	2010		AGPA29	
SHERCO	SE 250 , R	250	2014			AGPP80
SHERCO	SE 250 2.5i Enduro	250	2006	2011		AGPP106
SHERCO	SE 250 F, F-R	250	2014			AGPP80
SHERCO	SE 250 I/IR	250	2013			AGPP80
SHERCO	SE 250 I-F	250	2013			AGPP80
SHERCO	ST 250	250	1999	2000	AGPA18	AGPA18
SHERCO	ST 250 2.5	250	2001		AGPA45	AGPA47
SHERCO	SX 250 2.5i-F	250	2009	2011		AGPP106
SHERCO	ST 290 2.9	290	2001		AGPA45	AGPA47
SHERCO	300 ENDURO SE 3.0I (4T)	300	2010		AGPA29	
SHERCO	SE 300 , R	300	2014			AGPP80
SHERCO	SE 300 3.0i-F	300	2010	2011		AGPP106

PASTIGLIE BRAKE PADS

ACCOSSATO

INDICE ANALITICO PASTIGLIE / pads alphabetical index

MARCA Brand	MODELLO Model	CC	DA From	A To	ANT. Front	POST. Rear
SHERCO	SE 300 F, F-R	300	2014			AGPP80
SHERCO	SE 300 I/IR	300	2012	2013		AGPP80
SHERCO	SE 300 I-F	300	2013			AGPP80
SHERCO	ST 320 3.2F	320	2005		AGPA45	AGPA47
SHERCO	450 ENDURO 4.5I (4T)	450	2004	2010	AGPA29	
SHERCO	450 SM 4.5I F (SUPERMOTARD)	450	2004	2010	AGPA29	
SHERCO	510 SM 5.1I F SUPERMOTARD	450	2007		AGPA29	
SHERCO	SE 450 4.5I ENDURO	450	2004			AGPP90
SHERCO	SE 450 4.5i Enduro	450	2005	2011		AGPP106
SHERCO	SE 450 F, F-R	450	2014			AGPP80
SHERCO	SE 450 IR	450	2012	2013		AGPP80
SHERCO	SM 450 4.5I SUPERMOTARD	450	2006		AGPA112	AGPP106
SHERCO	510 ENDURO 5.1I F	510	2007	2010	AGPA29	
SHERCO	SE 510 5.1i Enduro	510	2006	2011		AGPP106
SHERCO	SE 510 IR	510	2012	2013		AGPP80
SIAM						
SIAM	50 MAT	50	1997		AGPA83	
SIAM	FALCON 50	50	1997		AGPA13	
SIAM	SCROSS 50	50	1997		AGPA13	
SIAM	100 MAT	100	1997		AGPA83	
SIAMOTO						
SIAMOTO	50 BIRDIE	50	2002		AGPA84	
SIAMOTO	125 BD, KD	125	2002		AGPA70	
SIAMOTO	125 SM	125	2001		AGPA70	
SIMSON						
SIMSON	HABICT CX 50	50	2001		AGPA31	
SIMSON	SPATZ 50	50	1999		AGPA31	
SIMSON	SPERBER 50	50	1999		AGPA31	
SIMSON	STAR 50	50	1999		AGPA31	
SIMSON	80 IFA	80	1989		AGPA194	
SIMSON	IFA 80	80	1989		AGPA31	
SIMSON	SR -2 CE 80	80			AGPA31	
SIMSON	SR 80 2 CE	80			AGPA194	
SIMSON	S 83 CX	83			AGPA194	
SIMSON	S 83 OR	83			AGPA194	
SIMSON	S CX 83	83			AGPA31	
SIMSON	S OR 83	83			AGPA31	
SIMSON	125	125	2001		AGPA28	
SIMSON	125 RS	125	2001		AGPA28	
SIMSON	SCHIKRA 125	125	1999			AGPA31
SIMSON	SM 125	125	2001			AGPA18
SJP						
SJP	2 Piston Caliper (30-375)					
SJP	4 Piston Caliper (30-370)					
SMC						
SMC	50 EASY RIDER	50	1997		AGPA83	
SULA						
SULA	50 CITY BIRD	50	1999		AGPA84	
SUZUKI						
SUZUKI	50 WOLF	50	1989		AGPA98	
SUZUKI	AJ 50 SEPIA	50	1992		AGPA83	
SUZUKI	AN 50	50	1995		AGPA154	

MARCA Brand	MODELLO Model	CC	DA From	A To	ANT. Front	POST. Rear
SUZUKI	AP 50	50	1995		AGPA14	
SUZUKI	AY 50 KATANA (PINZA BREMBO)	50	1997		AGPA13	
SUZUKI	AY 50, KATANA	50	1996		AGPA14	
SUZUKI	CC 50 TUNE	50	1992		AGPA82	
SUZUKI	DR 50 BIG	50	1989		AGPA18	
SUZUKI	RB 50 H	50	1987		AGPA98	
SUZUKI	RME 50	50	2010			AGPP72
SUZUKI	TR 50 STREET MAGIC	50	1997		AGPA154	
SUZUKI	RM 65	65	2003		AGPA169	AGPA111
SUZUKI	LIDO 75 STYLE	75			AGPA82	
SUZUKI	AH 80 SCOOTER	80	1992		AGPA83	
SUZUKI	GT 80 L /C	80	1981		AGPA98	
SUZUKI	RG 80 GAMMA	80		1987	AGPA98	
SUZUKI	RM 80	80	1996	2001	AGPA154	AGPA82
SUZUKI	RM 80 L,M,N,P,R,S	80	1990	1995		AGPA82
SUZUKI	ZZ 80 SEPIA	80	1990		AGPA82	
SUZUKI	RM 85 , L	85	2001	2004	AGPA154	
SUZUKI	RM 85 , L	85	2002	2004		AGPA82
SUZUKI	RM 85 , L	85	2005			AGPP230
SUZUKI	AH 100 V ADRESS	100	1995		AGPA154	
SUZUKI	RM 100	100	2003			AGPA111
SUZUKI	UG 110 HOKUTO	110	2000		AGPA154	
SUZUKI	TRS 118	118	1982	1983	AGPA98	
SUZUKI	125 VECSTAR	125	1994		AGPA154	
SUZUKI	AH 125 V ADRESS	125	1995		AGPA154	
SUZUKI	AN 125 R	125	1994		AGPA154	
SUZUKI	DR 125	125	1986	2002	AGPA88	
SUZUKI	DR 125 SM	125	2008		AGPA51	AGPP90
SUZUKI	DR-Z 125 L	125	2003		AGPA154	
SUZUKI	EN 125	125	2005		AGPA76	
SUZUKI	GN 125	125	1982	1990		AGPA221
SUZUKI	GN 125	125	2005		AGPA221	
SUZUKI	GN 125 E M-T	125	1991	2004	AGPA98	
SUZUKI	GS 125 E, Katana	125	1990	1994		AGPA221
SUZUKI	GS 125 ESD	125	1983	1994		AGPA221
SUZUKI	GS 125 ESZ	125	1982		AGPA98	
SUZUKI	GT 125 T, ET	125	1980		AGPA98	
SUZUKI	GX 125 R	125	1988		AGPA88	
SUZUKI	GZ 125 MARAUDER	125	2000	2003	AGPA163	
SUZUKI	RG 125 F, GAMMA	125	1992	1996	AGPA75	
SUZUKI	RG 125 WOLF	125	1992	1994	AGPA153	AGPA53
SUZUKI	RH 125 X	125	1987		AGPA88	
SUZUKI	RM 125	125	2005		AGPA51	AGPP90
SUZUKI	RM 125 F,G	125	1985	1986	AGPA163	
SUZUKI	RM 125 H	125	1987		AGPA76	
SUZUKI	RM 125 J	125	1988		AGPA76	
SUZUKI	RM 125 K,L	125	1989	1990	AGPA76	AGPP99
SUZUKI	RM 125 M,N,P,R,S	125	1991	1995	AGPA76	AGPP99
SUZUKI	RM 125 T-K	125	1996	2004	AGPA51	AGPP90
SUZUKI	RV 125 VANVAN	125	2003		AGPA94	
SUZUKI	SP 125 G,H,J	125	1986	1988	AGPA88	
SUZUKI	SX 125 R	125	1985		AGPA88	
SUZUKI	TR 125	125	1983		AGPA98	
SUZUKI	TS 125 R	125	1989	1996	AGPA76	AGPP99
SUZUKI	TS 125 X	125	1985	1989	AGPA88	
SUZUKI	TU 125 XT	125	1999		AGPA98	
SUZUKI	UC 125 EPICURO	125	1999		AGPA154	
SUZUKI	UH 125 BURGMAN	125	2002	2006	AGPA29	AGPA42

ACCOSSATO

PASTIGLIE BRAKE PADS

INDICE ANALITICO PASTIGLIE / pads alphabetical index

MARCA Brand	MODELLO Model	CC	DA From	A To	ANT. Front	POST. Rear
SUZUKI	VL 125 INTRUDER LC	125	2000	2002	AGPA163	
SUZUKI	AN 150	150	1998		AGPA154	
SUZUKI	UC 150 EPICURO	150	1999		AGPA154	
SUZUKI	UH 150 BURGMAN	150	2004	2006	AGPA29	AGPA42
SUZUKI	200 WOLF	200	1992		AGPA153	
SUZUKI	DR 200 G,H,J	200	1986	1988	AGPA88	
SUZUKI	DR 200 S	200	2015		AGPA88	
SUZUKI	DR 200 SE	200	1996	2013	AGPA88	
SUZUKI	DR 200 T	200	1996		AGPA88	
SUZUKI	RG 200 GAMMA	200	1991		AGPA75	
SUZUKI	SP 200 G,H,J	200	1986	1988	AGPA88	
SUZUKI	SX 200 R	200	1985		AGPA88	
SUZUKI	TS 200 R	200	1990	1994	AGPA76	AGPP99
SUZUKI	LT 230 EH-EP	230	1986	1993		AGPA111
SUZUKI	ET 240	240	1986		AGPA98	
SUZUKI	RH 240 X	240	1987		AGPA88	
SUZUKI	TS 240 X	240	1985		AGPA88	
SUZUKI	250 ACROSS	250	1990		AGPA153	AGPA53
SUZUKI	250 BANDIT	250	1990	1996	AGPA153	AGPA53
SUZUKI	250 COBRA	250	1990		AGPA75	AGPA53
SUZUKI	250 DJEBEL	250	1993		AGPA153	AGPP99
SUZUKI	250 IMPULSE	250	1995		AGPA72	
SUZUKI	250 SKY WAVE TYPE II	250	1998			AGPA40
SUZUKI	250 VECSTAR	250	1994		AGPA154	
SUZUKI	250 WOLF	250	1990		AGPA75	AGPA53
SUZUKI	AN 250 BURGMAN	250	1998	2003		AGPA40
SUZUKI	AN 250 BURGMAN	250	2004			AGPA41
SUZUKI	AN 250 BURGMAN	250	1998	2006	AGPA21	
SUZUKI	AN 250 BURGMAN BUSINESS	250	2004	2006		AGPP73
SUZUKI	DR 250 F	250	1985		AGPA88	
SUZUKI	DR 250 L,M,N,EP, ER,ES	250	1990	1995	AGPA76	AGPP99
SUZUKI	DR 250 S	250	1986	1989	AGPA88	
SUZUKI	DR 250 SL,SM,SN, SEP,SER, SES	250	1990	1995	AGPA76	AGPP99
SUZUKI	DR-Z 250	250	2001		AGPA51	AGPP99
SUZUKI	GF 250 S	250	1988			AGPA53
SUZUKI	GSF 250 VS, S BANDIT	250	1995		AGPA95	
SUZUKI	GSX 250 S, KATANA	250	1991		AGPA153	AGPA53
SUZUKI	GSX-R 250	250	1988	1989		AGPA53
SUZUKI	GSX-R 250 R	250	1989		AGPA75	AGPA53
SUZUKI	GW 250 INAZUMA	250	2012		AGPA72	AGPP88
SUZUKI	GW 250 INAZUMA F	250	2010		AGPA72	
SUZUKI	GW 250 INAZUMA F	250	2015			AGPP88
SUZUKI	GZ 250 MARAUDER	250	2000		AGPA163	
SUZUKI	LT 250 RJ-RR	250	1988	1994		AGPP165
SUZUKI	LT 250 SK, SL	250	1989	1990		AGPA111
SUZUKI	LT-F 250 OZARK	250	2003		AGPA88	
SUZUKI	LT-Z 250 QUAD SPORT	250	2004		AGPA88	
SUZUKI	NZ 250 S	250	1986		AGPA98	
SUZUKI	RG 250	250	1983	1984	AGPA53	AGPA53
SUZUKI	RG 250 GAMMA	250	1984	1988		AGPA53
SUZUKI	RGV 250	250	1988		AGPA223	AGPA53
SUZUKI	RGV 250	250	1993	1995	AGPA75	
SUZUKI	RGV 250 Gamma T (RGVR 250 SP)	250	1996		AGPA201	
SUZUKI	RGV 250 GAMMA, M	250	1991	1992	AGPA75	
SUZUKI	RGV 250 K	250	1989	1990	AGPA75	AGPA53
SUZUKI	RGV 250 R	250	1988		AGPA58	
SUZUKI	RH 250	250	1985		AGPA88	
SUZUKI	RM 250	250	2005		AGPA51	AGPP90
SUZUKI	RM 250 F	250	1985		AGPA163	
SUZUKI	RM 250 H, J	250	1987	1988	AGPA76	
SUZUKI	RM 250 K,L	250	1989	1990	AGPA76	AGPP99
SUZUKI	RM 250 M,N,P,R,S	250	1991	1995	AGPA76	AGPP99
SUZUKI	RM 250 T-K	250	1996	2004	AGPA51	AGPP90
SUZUKI	RMX 250 K,L,M,N,P, R,S	250	1989	1995	AGPA76	AGPP99
SUZUKI	RMX 250 T-W	250	1996	1998	AGPA51	AGPP99
SUZUKI	RMX 250 X-K1	250	1999		AGPA51	AGPP90
SUZUKI	RM-Z 250	250	2004	2006		AGPP106
SUZUKI	RM-Z 250	250	2007	2009		AGPP106
SUZUKI	RM-Z 250	250	2004	2009	AGPA51	
SUZUKI	RM-Z 250 Efi	250	2010		AGPA51	AGPP106
SUZUKI	SKY WAVE 250 (TYPE II)	250	1998		AGPA21	
SUZUKI	SP 250 F	250	1985		AGPA88	
SUZUKI	SW1 250	250	1992		AGPA153	
SUZUKI	TS 250 X	250	1985	1989	AGPA88	
SUZUKI	TU 250 X SUPER CLASSIC	250	1997		AGPA163	
SUZUKI	TV 250 J	250	1988		AGPA75	
SUZUKI	TV 250 J 88 HF	250	1988			AGPA53
SUZUKI	VL 250 INTRUDER	250	2000		AGPA163	
SUZUKI	LT-F 300 KING QUAD LEFT/REAR	300	2002		AGPA76	
SUZUKI	LT-F 300 KING QUAD RIGHT	300	2002		AGPA77	
SUZUKI	350 GOOSE	350	1992		AGPA75	AGPA53
SUZUKI	DR 350 L,M,N,P,R,S	350	1990	1999	AGPA76	AGPP99
SUZUKI	DR 350 S,SH,SL,SM, SN,SP,SR,SE	350	1990	1996	AGPA76	AGPP99
SUZUKI	DR 350 V, W, X	350	1997		AGPA51	AGPP99
SUZUKI	AN 400 BURGMAN	400	1999	2000	AGPA21	AGPA40
SUZUKI	AN 400 BURGMAN	400	2001			AGPA41
SUZUKI	AN 400 BURGMAN BUSINESS	400	2001	2006	AGPA21	AGPP73
SUZUKI	AN 400 BURGMAN LEFT/REAR	400	2007	2009		AGPP109
SUZUKI	AN 400 BURGMAN RIGHT	400	2007		AGPA23	
SUZUKI	DR-Z 400 S /E	400	2000			AGPP90
SUZUKI	DR-Z 400 SM	400	2005			AGPP90
SUZUKI	GSF 400 BANDIT	400	1991	1997		AGPA53

PASTIGLIE BRAKE PADS

INDICE ANALITICO PASTIGLIE / pads alphabetical index

MARCA Brand	MODELLO Model	CC	DA From	A To	ANT. Front	POST. Rear
SUZUKI	GSF 400 BANDIT	400	1991	1992	AGPA153	
SUZUKI	GSF 400 BANDIT	400	1993	1997	AGPA75	
SUZUKI	GSF 400 BANDIT	400	1994	1997	AGPA95	
SUZUKI	GSX 400 EFX	400	1982		AGPA98	
SUZUKI	GSX 400 F	400	1989			AGPA53
SUZUKI	GSX 400 FD	400	1983		AGPA98	
SUZUKI	GSX 400 FWS	400	1983		AGPA53	AGPA53
SUZUKI	GSX 400 FX, FZ	400	1981	1982	AGPA98	
SUZUKI	GSX 400 IMPULSE	400	1994	1996	AGPA72	AGPA53
SUZUKI	GSX 400 S, KATANA	400	1992		AGPA75	AGPA53
SUZUKI	GSX 400 S, KATANA	400	1983		AGPA98	
SUZUKI	GSX 400 X	400	1986			AGPA53
SUZUKI	GSX R 400 R	400	1990	1995	AGPA223	
SUZUKI	GSX-R 400	400	1987	1989		AGPA53
SUZUKI	GSX-R 400	400	1988	1989	AGPA75	
SUZUKI	GSX-R 400 F	400	1985	1986		AGPA53
SUZUKI	GSX-R 400 R	400	1990	1995	AGPA58	AGPA53
SUZUKI	KLT-A 400 KING QUAD LEFT	400	2008		AGPA114	
SUZUKI	KLT-A 400 KING QUAD RIGHT	400	2008		AGPA116	
SUZUKI	KLT-F 400 KING QUAD LEFT	400	2008		AGPA114	
SUZUKI	KLT-F 400 KING QUAD RIGHT	400	2008		AGPA116	
SUZUKI	LS 400 SAVAGE	400	1987		AGPA163	
SUZUKI	LT-A 400 EIGER 2WD/4WD	400	2002	2007	AGPA88	
SUZUKI	LT-A 400 KING QUAD LEFT	400	2008		AGPA114	
SUZUKI	LT-A 400 KING QUAD RIGHT	400	2008		AGPA116	
SUZUKI	LT-F 400 EIGER 2WD/4WD	400	2002		AGPA88	
SUZUKI	LT-F 400 KING QUAD LEFT	400	2008		AGPA114	
SUZUKI	LT-F 400 KING QUAD RIGHT	400	2008		AGPA116	
SUZUKI	LT-Z 400 QUAD SPORT	400	2002		AGPA111	AGPP165
SUZUKI	RF 400 RVC	400	1993	1997	AGPA72	AGPA53
SUZUKI	GS 450 E	450	1990		AGPA153	AGPA153
SUZUKI	GS 450 S	450	1986		AGPA98	
SUZUKI	LT-A 450 KING QUAD LEFT	450	2008		AGPA114	
SUZUKI	LT-A 450 KING QUAD RIGHT	450	2008		AGPA116	
SUZUKI	LT-R 450 LEFT/REAR	450	2006		AGPA76	AGPP165
SUZUKI	LT-R 450 RIGHT	450	2006		AGPA77	
SUZUKI	RMX 450 Z Efi	450	2010			AGPP106
SUZUKI	RM-Z 450	450	2005	2007		AGPP106
SUZUKI	RM-Z 450 Efi	450	2008			AGPP106
SUZUKI	GS 500	500	2004		AGPA94	AGPA53
SUZUKI	GS 500 E	500	1989	1995	AGPA153	AGPA53
SUZUKI	GS 500 E	500	1996	2003	AGPA94	AGPA53
SUZUKI	GS 500 F	500	2004		AGPA94	AGPA53
SUZUKI	GSX 500 E	500	1983		AGPA53	AGPA53
SUZUKI	LT 500 RH-RR	500	1987	1995		AGPP165
SUZUKI	LT-A 500 F VINSON	500	2002		AGPA88	
SUZUKI	LT-A 500 FY QUADMASTER LEFT	500	2000		AGPA76	
SUZUKI	LT-A 500 FY QUADMASTER RIGHT	500	2000		AGPA77	
SUZUKI	LT-A 500 KING QUAD LEFT	500	2011		AGPA114	
SUZUKI	LT-A 500 KING QUAD RIGHT	500	2011		AGPA116	
SUZUKI	LT-F 500 F LEFT	500	1998		AGPA77	
SUZUKI	LT-F 500 F RIGHT	500	1998		AGPA76	
SUZUKI	RG 500	500	1985	1987		AGPA53
SUZUKI	RG 500 GAMMA	500	1985			AGPA53
SUZUKI	RM 500	500	1985	1986	AGPA163	
SUZUKI	RM 500 H	500	1987		AGPA76	AGPA111
SUZUKI	GS 550 ED, ESD, LD	550	1983		AGPA53	AGPA53
SUZUKI	GSX 550 ED	550	1983	1984	AGPA53	AGPA53
SUZUKI	GSX 550 ES, EF	550	1984	1987	AGPA53	AGPA53
SUZUKI	FZ6 600	600	2004			AGPP88
SUZUKI	FZ6 600 FAZER	600	2004			AGPP88
SUZUKI	FZ6 600 FAZER S2	600	2007			AGPP88
SUZUKI	FZ6 600 FAZER S2 ABS	600	2007			AGPP88
SUZUKI	FZ6 600 S2	600	2007			AGPP88
SUZUKI	FZ6 600 S2 ABS 07- LS	600	2007			AGPP88
SUZUKI	GSF 600 BANDIT / S BANDIT LEFT/REAR	600	2000	2004	AGPA95	AGPA53
SUZUKI	GSF 600 BANDIT / S BANDIT RIGHT	600	2000	2004	AGPA94	
SUZUKI	GSF 600 N, S BANDIT	600	1995	1999	AGPA72	AGPA53
SUZUKI	GSR 600	600	2006		AGPA75	AGPP148
SUZUKI	GSX 600 FJ-FK KATANA	600	1988	1989		AGPA53
SUZUKI	GSX 600 FL-FV KATANA	600	1990	1997		AGPA53
SUZUKI	GSX 600 FW LEFT/REAR	600	1998		AGPA95	AGPA53
SUZUKI	GSX 600 FW RIGHT	600	1998		AGPA94	
SUZUKI	GSX-R 600	600	1997	2003	AGPA75	AGPA53
SUZUKI	GSX-R 600 (RAD.CAL)	600	2004	2010	AGPA109	
SUZUKI	GSX-R 600 (RAD.CAL)	600	2006	2010		AGPP148
SUZUKI	GSX-R 600 (RAD.CAL)	600	2011		AGPA106	
SUZUKI	GSXR 600 L1/ L2/L3/L4/L5	600	2011	2015		AGPP39
SUZUKI	RF 600 R	600	1993	1996	AGPA72	AGPA53
SUZUKI	YZF 600 R6	600	2003	2004		AGPP88
SUZUKI	YZF 600 R6 (RAD.CAL)	600	2005	2006		AGPP88
SUZUKI	AN 650 A BURGMAN EXECUTIVE	650	2004	2012	AGPA72	AGPP109
SUZUKI	AN 650 BURGMAN	650	2002		AGPA72	AGPP109
SUZUKI	AN 650 Z BURGMAN EXECUTIVE	650	2013		AGPA72	AGPP109

ACCOSSATO

PASTIGLIE BRAKE PADS

INDICE ANALITICO PASTIGLIE / pads alphabetical index

MARCA Brand	MODELLO Model	CC	DA From	A To	ANT. Front	POST. Rear
SUZUKI	DL 650 V-STROM RIGHT	650	2004		AGPA94	
SUZUKI	DL 650 V-STROM LEFT/REAR	650	2004		AGPA95	AGPP88
SUZUKI	DL 650 V-STROM XT LEFT/REAR	650	2015		AGPA95	AGPP88
SUZUKI	DL 650 V-STROM XT RIGHT	650	2015		AGPA94	
SUZUKI	DR 650 SE T-W	650	1996			AGPP99
SUZUKI	GSF 650 BANDIT	650	2007		AGPA75	AGPP88
SUZUKI	GSF 650 BANDIT / S	650	2009		AGPA94	
SUZUKI	GSF 650 BANDIT / S BANDIT LEFT/REAR	650	2005	2006	AGPA95	
SUZUKI	GSF 650 BANDIT / S BANDIT LEFT/REAR ABS	650	2006			AGPP88
SUZUKI	GSF 650 BANDIT / S BANDIT RIGHT	650	2005		AGPA94	
SUZUKI	GSF 650 BANDIT ABS	650	2007		AGPA75	AGPP88
SUZUKI	GSF 650 S BANDIT	650	2007		AGPA75	AGPP88
SUZUKI	GSF 650 S BANDIT ABS	650	2007		AGPA75	AGPP88
SUZUKI	GSX 650 F	650	2008		AGPA75	AGPP88
SUZUKI	LS 650	650	2005		AGPA163	
SUZUKI	LS 650 P	650	1986	1988	AGPA163	
SUZUKI	LS 650 P SAVAGE	650	1995	2004	AGPA163	
SUZUKI	SFV 650 GLADIUS LEFT/REAR	650	2009		AGPA95	AGPP185
SUZUKI	SFV 650 GLADIUS RIGHT	650	2009		AGPA94	
SUZUKI	SV 650 ,S LEFT/REAR	650	1999	2002		AGPA53
SUZUKI	SV 650 ,S LEFT/REAR	650	1999	2003	AGPA95	
SUZUKI	SV 650 ,S LEFT/REAR	650	2003			AGPP88
SUZUKI	SV 650 ,S RIGHT	650	1999	2003	AGPA94	
SUZUKI	XF 650 FREEWIND	650	1997	2002	AGPA94	AGPP89
SUZUKI	LT-A 700 KING QUAD LEFT	700	2005		AGPA114	
SUZUKI	LT-A 700 KING QUAD RIGHT	700	2005		AGPA116	
SUZUKI	MT-07 700	700	2014			AGPP88
SUZUKI	MT-07 700 MOTO CAGE	700	2015			AGPP88
SUZUKI	GS 750 KATANA	750	1996		AGPA53	AGPA53
SUZUKI	GS 750 RF	750	1985	1988		AGPA53
SUZUKI	GSR 750 LEFT/ REAR	750	2011		AGPA95	AGPP88
SUZUKI	GSR 750 RIGHT	750	2011		AGPA94	
SUZUKI	GSX 750 ES	750	1984	1985	AGPA53	AGPA53
SUZUKI	GSX 750 FK-FT KATANA	750	1989	1996		AGPA53
SUZUKI	GSX 750 FW LEFT/REAR	750	1998	2002	AGPA95	AGPA53
SUZUKI	GSX 750 FW RIGHT	750	1998	2002	AGPA94	
SUZUKI	GSX 750 LEFT/ REAR	750	1998	2008	AGPA95	AGPA53
SUZUKI	GSX 750 RIGHT	750	1998	2008	AGPA94	
SUZUKI	GSX R 750	750	1988		AGPA223	
SUZUKI	GSX R 750	750	1989	1991	AGPA223	
SUZUKI	GSX R 750	750	1992	1993	AGPA223	
SUZUKI	GSX-R 750	750	1985	1988		AGPA53
SUZUKI	GSX-R 750	750	1988		AGPA58	
SUZUKI	GSX-R 750	750	1994	1999	AGPA73	AGPA53
SUZUKI	GSX-R 750 (RAD.CAL)	750	2004	2010	AGPA109	
SUZUKI	GSX-R 750 (RAD.CAL)	750	2006	2010		AGPP148
SUZUKI	GSX-R 750 (RAD.CAL)	750	2011		AGPA106	
SUZUKI	GSX-R 750 F	750	1989	1991	AGPA58	AGPA53
SUZUKI	GSXR 750 L1/ L2/L3/L4/L5	750	2011	2015		AGPP39
SUZUKI	GSX-R 750 W	750	1992	1993	AGPA58	AGPA53
SUZUKI	GSX-R 750 Y	750	2000	2003	AGPA75	AGPA53
SUZUKI	LT-A 750 KING QUAD LEFT	750	2008		AGPA114	
SUZUKI	LT-A 750 KING QUAD RIGHT	750	2008		AGPA116	
SUZUKI	800 FAZER 8	800	2010			AGPP88
SUZUKI	C 800 INTRUDER	800	2005		AGPA94	
SUZUKI	DR 800 S, BIG	800	1991	1995	AGPA153	AGPA77
SUZUKI	DR 800 ST BIG	800	1996		AGPA95	AGPA77
SUZUKI	DR-Z 800	800	1988	1990		AGPA111
SUZUKI	FZ8 800	800	2010			AGPP88
SUZUKI	M 800 INTRUDER	800	2005		AGPA94	
SUZUKI	VL 800 INTRUDER LC VOLUSIA	800	2001	2004	AGPA94	
SUZUKI	VX 800 L-P	800	1990	1993	AGPA153	
SUZUKI	VZ 800 MARAUDER	800	1997	2004	AGPA94	
SUZUKI	MT-09 850 (RAD.CAL)	850	2014			AGPP88
SUZUKI	MT-09 850 SPORT TRACKER (RAD.CAL)	850	2015			AGPP88
SUZUKI	MT-09 850 STREET RALLY (RAD.CAL)	850	2014			AGPP88
SUZUKI	MT-09 850 TRACER (RAD.CAL)	850	2015			AGPP88
SUZUKI	DL 1000 V-STROM	1000	2014		AGPA109	AGPP148
SUZUKI	DL 1000 V-STROM LEFT/REAR	1000	2002	2013	AGPA95	AGPP88
SUZUKI	DL 1000 V-STROM RIGHT	1000	2002	2013	AGPA94	
SUZUKI	FZ1 1000 FAZER	1000	2006			AGPP88
SUZUKI	GSX R 1000 (Rad.cal)	1000	2003		AGPA37	
SUZUKI	GSX-R 1000	1000	2001	2002	AGPA73	
SUZUKI	GSX-R 1000 (RAD.CAL)	1000	2004	2011	AGPA109	
SUZUKI	GSX-R 1000 (RAD.CAL)	1000	2007	2008		AGPP148
SUZUKI	GSX-R 1000 (RAD.CAL)	1000	2012		AGPA106	

PASTIGLIE BRAKE PADS

INDICE ANALITICO PASTIGLIE / pads alphabetical index

MARCA Brand	MODELLO Model	CC	DA From	A To	ANT. Front	POST. Rear
SUZUKI	GSXR 1000 K9/L0/ L1/L2/L3/ZL3/L4/ ZL4/L5/AL5	1000	2009	2015		AGPP39
SUZUKI	GSX-S 1000	1000	2015		AGPA106	
SUZUKI	GSX-S 1000 AL5 (ABS)	1000	2015			AGPP39
SUZUKI	GSX-S 1000 F	1000	2015		AGPA106	
SUZUKI	GSX-S 1000 FAL5 (ABS)	1000	2015			AGPP39
SUZUKI	SV 1000 , S	1000	2003		AGPA75	AGPP88
SUZUKI	TL 1000 RW	1000	1998	2002	AGPA73	AGPA53
SUZUKI	TL 1000 S V-TWIN	1000	1997	2001	AGPA75	AGPA53
SUZUKI	YZF 1000 R1 (RAD.CAL)	1000	2004	2006		AGPP88
SUZUKI	YZF 1000 R1 (RAD. CAL) (4-PAD)	1000	2007	2014		AGPP88
SUZUKI	YZF 1000 R1 (RAD. CAL) (4-PAD) ABS	1000	2012	2014		AGPP88
SUZUKI	YZF 1000 R1 SP (RAD.CAL)	1000	2006			AGPP88
SUZUKI	GSX 1100 EF	1100	1986		AGPA53	AGPA53
SUZUKI	GSX 1100 F	1100	1993		AGPA58	AGPA53
SUZUKI	GSX 1100 G	1100	1994	1995	AGPA153	
SUZUKI	GSX 1100 G LEFT/REAR	1100	1996		AGPA95	AGPA53
SUZUKI	GSX 1100 G RIGHT	1100	1996		AGPA94	
SUZUKI	GSX 1100 GM,GN,GP	1100	1991	1993	AGPA153	
SUZUKI	GSX 1100 KATANA	1100	1993		AGPA58	AGPA53
SUZUKI	GSX 1100 Katana	1100	1993		AGPA223	
SUZUKI	GSX R 1100	1100	1989	1992	AGPA223	
SUZUKI	GSX-R 1100 G, H, J	1100	1986	1988		AGPA53
SUZUKI	GSX-R 1100 K-N	1100	1989	1992	AGPA58	AGPA53
SUZUKI	GSX-R 1100 WP,WR, WS,WT,WV	1100	1993	1997	AGPA73	AGPA53
SUZUKI	GSF 1200 BANDIT	1200	1995	2005		AGPA53
SUZUKI	GSF 1200 BANDIT	1200	2001	2005	AGPA73	
SUZUKI	GSF 1200 BANDIT	1200	2006			AGPP88
SUZUKI	GSF 1200 BANDIT	1200	1995	1996	AGPA58	
SUZUKI	GSF 1200 Bandit	1200	1995	1996	AGPA223	
SUZUKI	GSF 1200 BANDIT	1200	2006		AGPA75	
SUZUKI	GSF 1200 S BANDIT	1200	2001	2005	AGPA73	AGPA53
SUZUKI	GSF 1200 S BANDIT	1200	2006		AGPA75	AGPP88
SUZUKI	GSX 1200	1200	1999	2001	AGPA96	AGPA53
SUZUKI	GSF 1250 BANDIT ABS	1250	2006		AGPA75	AGPP88
SUZUKI	GSF 1250 S BANDIT ABS	1250	2006		AGPA75	AGPP88
SUZUKI	GSF 1250 S BANDIT ABS	1250	2015		AGPA75	AGPP88
SUZUKI	GSX 1250 FA	1250	2010		AGPA75	AGPP88
SUZUKI	1300 B-KING	1300	2007			AGPP88
SUZUKI	GSX 1300 B KING	1300	2007		AGPA107	
SUZUKI	GSX-R 1300 HAYABUSA	1300	2008	2012	AGPA109	AGPP148
SUZUKI	GSX-R 1300 HAYABUSA	1300	1999	2007	AGPA73	AGPA53
SUZUKI	GSX-R 1300 HAYABUSA (RAD.CAL)	1300	2013		AGPA106	AGPP148
SUZUKI	1340 B-KING	1340	2008		AGPA38	AGPP148
SUZUKI	GSX 1400 TEST	1400	2002		AGPA73	
SUZUKI	C 1500 Intruder Left/Rear	1500	2005	2010		AGPP229
SUZUKI	C 1500 INTRUDER LEFT/REAR	1500	2005		AGPA95	
SUZUKI	C 1500 INTRUDER RIGHT	1500	2005		AGPA94	
SUZUKI	C 1500 T INTRUDER	1500	2013		AGPA72	
SUZUKI	M 1500 INTRUDER LEFT/REAR	1500	2009		AGPA95	
SUZUKI	M 1500 INTRUDER RIGHT	1500	2009		AGPA94	
SUZUKI	VL 1500 INTRUDER LC LEFT/REAR	1500	2002		AGPA95	AGPP229
SUZUKI	VL 1500 INTRUDER LC RIGHT	1500	2002		AGPA94	
SUZUKI	M 1600 INTRUDER	1600	2005		AGPA37	
SUZUKI	VZ 1600 MARAUDER	1600	2004		AGPA73	
SUZUKI	C 1800 R INTRUDER	1800	2008		AGPA87	
SUZUKI	M 1800 R INTRUDER	1800	2006		AGPA109	
SUZUKI	M 1800 R2 INTRUDER	1800	2008		AGPA109	
SUZUKI	BANDIT RIGHT ABS		2006		AGPA94	
	SWM					
SWM	125 GP	125	1986		AGPA194	AGPA194
SWM	125 S1 - S2	125			AGPA194	
SWM	GP 125	125	1986		AGPA31	AGPA31
SWM	S1-S2 125	125			AGPA31	
SWM	250 EXPLORER	250	1986		AGPA194	AGPA194
SWM	250 PIONER	250	1986		AGPA194	AGPA194
SWM	250 S1 - S2	250			AGPA194	
SWM	EXPLORER 250	250	1986		AGPA31	AGPA31
SWM	PIONER 250	250	1986		AGPA31	AGPA31
SWM	S1-S2 250	250			AGPA31	
SWM	RS 300 R	300	2015			AGPP80
SWM	TRL 329 MJ	329	1986		AGPA194	
SWM	XP 350 SAHARA	350			AGPA141	
SWM	440 GRAN MILANO	440	2015		AGPA72	
SWM	440 GRAN TURISMO	440	2015		AGPA72	
SWM	440 SILVER VASE	440	2015		AGPA72	
SWM	SM 450 R	450	2015			AGPP80
SWM	SM 450 R	450	2015		AGPA112	
SWM	RS 500 R	500	2015			AGPP80
SWM	650 SUPERDUAL	650	2015		AGPA112	
SWM	TRL MJ 329		1986		AGPA31	
	SYM					
SYM	50 ALLO	50	2011		AGPA102	
SYM	50 CROX	50	2014		AGPA102	
SYM	50 DD	50	2002		AGPA168	
SYM	50 FIDDLE	50	2009		AGPA102	
SYM	50 JET 4 NAKED	50	2011		AGPA102	
SYM	50 JET 4 R	50	2011		AGPA102	
SYM	50 JET BASIX	50	2007		AGPA102	
SYM	50 JET EURO X	50	2005		AGPA102	
SYM	50 JET SPORT X	50	2006		AGPA102	
SYM	50 JET SPORT X SR	50	2006		AGPA102	AGPP150
SYM	50 JET, ALPHA	50	1995		AGPA102	
SYM	50 JUNGLE	50	1996		AGPA102	

ACCOSSATO

PASTIGLIE BRAKE PADS

INDICE ANALITICO PASTIGLIE / pads alphabetical index

MARCA Brand	MODELLO Model	CC	DA From	A To	ANT. Front	POST. Rear
SYM	50 MASK	50	2000		AGPA102	
SYM	50 MASK LC	50	2000		AGPA102	
SYM	50 ORBIT II	50	2012		AGPA102	
SYM	50 RED DEVIL	50	1997		AGPA102	
SYM	50 SUPER FANCY	50	1995	1997	AGPA102	
SYM	50 SYMPHONY	50	2009		AGPA102	
SYM	50 SYMPHONY SR	50	2011		AGPA102	
SYM	50 SYMPLY	50	2008		AGPA102	
SYM	50 X'PRO	50	2014		AGPA102	
SYM	BULLET 50	50	1993		AGPA168	
SYM	CINDERELLA 50	50	1999		AGPA168	
SYM	MIO 50	50	2005		AGPA168	
SYM	RS 50	50	2005		AGPA158	
SYM	RS21 50	50	2002		AGPA158	
SYM	100 JET	100	2000		AGPA102	
SYM	100 JET EURO X	100	2005		AGPA102	
SYM	100 JET SPORT X	100	2005		AGPA102	
SYM	100 PARTY	100	1997		AGPA102	
SYM	100 SUPER FANCY	100	1995		AGPA102	
SYM	CINDERELLA 100	100	2001		AGPA168	
SYM	MIO 100	100	2005		AGPA168	
SYM	110 STAR	110	2003		AGPA102	
SYM	BULLET 110	110	1993		AGPA168	
SYM	125 ALLO	125	2011		AGPA102	
SYM	125 ATTILA	125	1995		AGPA102	
SYM	125 CITYCOM	125	2009		AGPA102	
SYM	125 CROX	125	2014		AGPA102	
SYM	125 EURO MX	125	2003		AGPA158	
SYM	125 FIDDLE	125	2009		AGPA102	
SYM	125 JOYRIDE	125	2001	2009	AGPA158	
SYM	125 JOYRIDE EVO	125	2010	2005	AGPA158	
SYM	125 Joyride S	125	2016		AGPA158	
SYM	125 MEGALO	125	2002		AGPA102	
SYM	125 NEW DUKE	125	2002	2007	AGPA102	
SYM	125 SUPER DUKE	125	1995	2001	AGPA102	
SYM	125 SYMPHONY	125	2009		AGPA102	
SYM	125 SYMPHONY SR	125	2011		AGPA102	
SYM	125 SYMPLY	125	2008		AGPA102	
SYM	125 Wolf Classic	125	2005		AGPA79	
SYM	125 WOLF LEGEND	125	2002		AGPA79	
SYM	125 X'PRO	125	2014		AGPA102	
SYM	GTS 125	125	2007		AGPA21	
SYM	HD 125	125	2004		AGPA50	
SYM	HD 125 EVO DT	125	2010		AGPA102	
SYM	HD2 125 EVO	125	2014		AGPA102	
SYM	JOY RIDE 125	125	2001			AGPA50
SYM	RS 125	125	2005		AGPA158	AGPA23
SYM	RS21 125 , R	125	2002		AGPA158	
SYM	SB 125 WOLF NI	125	2011			AGPA173
SYM	VOYAGER 125	125	2005		AGPA43	
SYM	VS 125	125	2009		AGPA158	
SYM	150 ATTILA	150	2000		AGPA102	
SYM	150 EURO MX	150	2003		AGPA158	
SYM	150 JOYRIDE	150	2001		AGPA158	
SYM	150 SUPER DUKE	150	1996	2001	AGPA102	
SYM	H01 150	150	1995		AGPA102	
SYM	JOY RIDE 150	150	2001			AGPA50
SYM	RS 150	150	2005		AGPA158	AGPA23
SYM	MF 180	180	2003		AGPA79	
SYM	200 FIDDLE II	200	2011		AGPA102	
SYM	200 JOYRIDE	200	2001		AGPA158	AGPA50
SYM	200 JOYRIDE EVO	200	2009		AGPA102	
SYM	200 JOYRIDE S	200	2016		AGPA158	
SYM	200 TRACKRUNNER	200	2006		AGPA173	AGPA173
SYM	HD 200	200	2004		AGPA50	
SYM	HD 200 EVO	200	2007		AGPA102	
SYM	HD 200 EVO	200	2010		AGPA102	
SYM	HD2 200 EVO	200	2014		AGPA102	
SYM	250 QUADLANDER	250	2006		AGPA173	AGPP57
SYM	GTS 250	250	2007		AGPA21	
SYM	JOY MAX 250	250	2007		AGPA43	
SYM	RV 250 EI	250	2010		AGPA21	
SYM	SN 250 NI WOLF	250	2014			AGPA173
SYM	VOYAGER 250	250	2005		AGPA43	
SYM	300 CITY MAX	300	2006		AGPA173	AGPP57
SYM	300 CITYCOM	300	2009		AGPA102	AGPA102
SYM	300 CITYCOM S	300	2015		AGPA102	AGPA102
SYM	300 QUADLANDER	300	2006		AGPA173	AGPA173
SYM	300 WOLF CAFE RACER	300	2015			AGPA173
SYM	300 WOLF CLASSIC 15- HF	300	2015			AGPA173
SYM	GTS 300	300	2009		AGPA21	
SYM	GTS 300 EVO I	300	2011		AGPA21	
SYM	JOYMAX EVO 300	300	2010		AGPA21	
SYM	JOYMAX EVO 300 I	300	2010		AGPA21	
SYM	400 i MaxSym	400	2011		AGPA101	AGPP239
SYM	400 i MaxSym	400	2012		AGPA238	AGPP239
SYM	GT 500	500	2004		AGPA21	
SYM	GT 500	500	2007		AGPA21	AGPA50
SYM	600 i MaxSym	600	2014		AGPA238	AGPP239
SYM	600 QUAD RAIDER	600	2008		AGPA173	AGPA173
TGB						
TGB	50 203	50	2005		AGPA80	
TGB	50 AKROS TEC 5	50	1999		AGPA80	
TGB	50 APOLLO	50	1999		AGPA80	
TGB	50 Bull&t RS/RR	50	2011		AGPA221	
TGB	50 Bullet	50	2010		AGPA221	
TGB	50 FIRE, SKY	50	2003		AGPA80	
TGB	GT 50 Veloce	50	2009		AGPA222	
TGB	90 APOLLO	90	1999		AGPA80	
TGB	125 Bull&t RS/RR	125	2011		AGPA221	
TGB	250 DYNASTY	250	2006		AGPA80	AGPA84
TGB	400 Avenger 4x2 / LE	400	2007	2009	AGPA173	AGPA173
TGB	425 Blade 4x4	425	2007	2009	AGPA173	AGPA173
TGB	425 Blade 4x4 SE	425	2009		AGPA173	AGPA173
TGB	525 Blade 4x4 SE	425	2009		AGPA173	AGPA173
TGB	525 Blade 4x4 SL	425	2009		AGPA173	
TGB	500 Avenger 4x2 R	500	2007	2009	AGPA173	AGPA173
TGB	525 SE 4x4	525	2009		AGPA173	
TGB	550 Blade 4x4 SE / SL	550	2009		AGPA173	
TGB	BUFFALO		2003			AGPA23
TM						
TM	80 (BIG WHEEL)	80	2002	2004	AGPA29	
TM	80 CROSS	80	1996	2001	AGPA29	
TM	80 ENDURO	80	1996	2000	AGPA29	
TM	80 JUNIOR	80	1996	2000	AGPA82	AGPA111
TM	80 JUNIOR CROSS	80	2005	2007	AGPA29	
TM	80 JUNIOR CROSS (SMALL WHEEL)	80	2002	2004	AGPA29	
TM	80 MINICROSS / JUNIOR	80	1996	2000	AGPA29	

PASTIGLIE BRAKE PADS

INDICE ANALITICO PASTIGLIE / pads alphabetical index

MARCA Brand	MODELLO Model	CC	DA From	A To	ANT. Front	POST. Rear
TM	85	85	2001	2012		AGPP90
TM	85 (BIG WHEEL)	85	2002	2004	AGPA29	
TM	85 CROSS	85	1996	2001	AGPA29	
TM	85 JUNIOR CROSS	85	2005	2007	AGPA29	
TM	85 JUNIOR CROSS (SMALL WHEEL)	85	2002	2004	AGPA29	
TM	85 MINICROSS / JUNIOR	85	1996	2000	AGPA29	
TM	MX 85 JR	85	2002	2010	AGPA29	
TM	100 (BIG WHEEL)	100	2002	2004	AGPA29	
TM	100 JUNIOR CROSS	100	2005	2007	AGPA29	
TM	100 JUNIOR CROSS (SMALL WHEEL)	100	2002	2004	AGPA29	
TM	125	125	2001	2004		AGPP90
TM	125	125	2005			AGPP106
TM	125 CROSS	125	1995	2000	AGPA29	
TM	125 Enduro	125	2005			AGPP106
TM	125 ENDURO	125	2001	2004		AGPP90
TM	125 ENDURO	125	1995	2000	AGPA29	
TM	EN 125 ENDURO (2T)	125	2001	2010	AGPA29	
TM	MX 125 (2T)	125	2001	2010	AGPA29	
TM	SMM 125 BLACK DREAM (2T)	125	2008	2010		AGPA194
TM	SMM 125 BLACK DREAM (RIM BRAKE)	125	2004	2007		AGPA194
TM	SMR 125	125	2005		AGPA32	
TM	EN 144 (2T)	144	2008	2010	AGPA29	
TM	MX 144 (2T)	144	2008	2010	AGPA29	
TM	250	250	2005			AGPP106
TM	250 CROSS	250	1995	2000	AGPA29	
TM	250 Enduro	250	2005			AGPP106
TM	250 ENDURO	250	1995	2000	AGPA29	
TM	250 F	250	2005			AGPP106
TM	250 F Enduro	250	2005		AGPA29	AGPP106
TM	EN 250 ENDURO (2T)	250	2001	2010	AGPA29	
TM	EN 250 F ENDURO (4T)	250	2004	2010	AGPA29	
TM	EN 250 FI	250	2010		AGPA29	
TM	MX 250 (2T)	250	2001	2010	AGPA29	
TM	MX 250 (4T) CROSS	250	2002	2010	AGPA29	
TM	MX 250 FI (4T)	250	2010		AGPA29	
TM	SMM 250 (2T)	250	2005	2010		AGPA194
TM	300	300	1998	2005	AGPA29	
TM	300	300	2005			AGPP106
TM	300 CROSS	300	1995	2000	AGPA29	
TM	300 Enduro	300	2005			AGPP106
TM	300 ENDURO	300	2001	2005	AGPA29	
TM	300 ENDURO (2T)	300	1995	2000	AGPA29	
TM	EN 300 ENDURO (2T)	300	2001	2010	AGPA29	
TM	MX 300 (2T)	300	2001	2010	AGPA29	
TM	SMM 300 (2T)	300	2005	2010		AGPA194
TM	320	320	1996	1997	AGPA29	
TM	400 CROSS (4T)	400	1995	2000	AGPA29	
TM	400 F	400	2000		AGPA29	
TM	400 F 0	400	2001		AGPA29	
TM	400 F ENDURO	400	2001		AGPA29	
TM	MX 400 (4T) CROSS	400	2002	2003	AGPA29	
TM	SMF 400 F	400	2002		AGPA32	
TM	SMM 400 (4T) (RIM BRAKE)	400	2004			AGPA194
TM	SMR 400 F	400	2003		AGPA32	
TM	450 F	450	2005			AGPP106
TM	450 F	450	2002	2005	AGPA29	
TM	450 F Enduro	450	2005			AGPP106
TM	450 F ENDURO	450	2002	2005	AGPA29	
TM	EN 450 F (4T)	450	2004	2010	AGPA29	
TM	MX 450 F (4T)	450	2004	2010	AGPA29	
TM	SMM 450 F BLACK DREAM ES	450	2008	2010		AGPA194
TM	SMR 450 F	450	2004		AGPA32	
TM	SMX 450 F	450	2004		AGPA112	
TM	SMX 450 F	450	2003		AGPA32	
TM	530 CROSS (4T)	530	1998	2000	AGPA29	
TM	530 F	530	2005			AGPP106
TM	530 F	530	2001	2005	AGPA29	
TM	530 F ENDURO	530	2001	2005	AGPA29	
TM	530 F Enduro	530	2005			AGPP106
TM	EN 530 F (4T)	530	2004	2010	AGPA29	
TM	MX 530 F	530	2005	2010	AGPA29	
TM	SMM 530 F BLACK DREAM (RIM BRAKE)	530	2004	2007		AGPA194
TM	SMM 530 F BLACK DREAM ES	530	2008	2010		AGPA194
TM	SMR 530 F	530	2003		AGPA32	
TM	SMX 600 F	600	2003		AGPA32	
TM	SMX 660 F	660	2004		AGPA112	
TM	85		2013			AGPP72
TOMOS						
TOMOS	BT 50 S	50	1989		AGPA16	
TOMOS	N 50 AT, BT	50	1991		AGPA16	
TOMOS	REVIVAL 50	50	2002		AGPA13	
TOMOS	SE 50	50	2005		AGPA70	
TOMOS	STREETMATE 50	50	2003		AGPA13	
TOMOS	CTX 80	80	1989		AGPA16	
TOMOS	MC 125 T	125	2006			AGPA18
TOMOS	SE 125	125	2005			AGPA18
TOMOS	SM 125 F (RAD.CAL)	125	2006		AGPA142	
TOMOS	SM 125 F (RAD.CAL)	125	2006		AGPA175	
TOMOS	SM F 125 (Rad. Cal.)	125	2006			AGPA18
TORNAX						
TORNAX	RX HF 80	80			AGPA31	
TRIUMPH						
TRIUMPH	600 DAYTONA	600	2004		AGPA58	AGPP89
TRIUMPH	600 Daytona	600	2003	2004	AGPA223	
TRIUMPH	600 SPEED FOUR	600	2003		AGPA58	AGPP89
TRIUMPH	600 Speed Four	600	2003	2006	AGPA223	
TRIUMPH	TT 600	600	2000	2003	AGPA58	AGPP89
TRIUMPH	TT 600	600	2000	2003	AGPA223	
TRIUMPH	650 DAYTONA	650	2005		AGPA58	AGPP89
TRIUMPH	650 Daytona	650	2005	2006	AGPA223	
TRIUMPH	675 DAYTONA (RAD.CAL)	675	2006	2008	AGPA38	AGPP89
TRIUMPH	675 DAYTONA R TRIPLE (RAD.CAL)	675	2011	2012		AGPP89
TRIUMPH	675 DAYTONA R TRIPLE (RAD.CAL)	675	2011	2013	AGPA186	

ACCOSSATO

PASTIGLIE BRAKE PADS

INDICE ANALITICO PASTIGLIE / pads alphabetical index

MARCA Brand	MODELLO Model	CC	DA From	A To	ANT. Front	POST. Rear
TRIUMPH	675 DAYTONA TRIPLE (RAD.CAL)	675	2009	2013	AGPA138	
TRIUMPH	675 DAYTONA TRIPLE (RAD.CAL)	675	2009	2012		AGPP89
TRIUMPH	675 STREET TRIPLE	675	2008	2012		AGPP89
TRIUMPH	675 STREET TRIPLE	675	2008	2013	AGPA72	
TRIUMPH	675 STREET TRIPLE R	675	2009	2012	AGPA38	AGPP89
TRIUMPH	675 STREET TRIPLE R	675	2013		AGPA38	
TRIUMPH	675 STREET TRIPLE RX	675	2015		AGPA38	
TRIUMPH	750 BONNEVILLE U.K.	750	1987		AGPA141	AGPA141
TRIUMPH	750 DAYTONA	750	1991	1992	AGPA58	
TRIUMPH	750 Daytona	750	1991	1992	AGPA223	
TRIUMPH	750 TRIDENT LEFT/REAR	750	1991		AGPA76	AGPA76
TRIUMPH	750 TRIDENT RIGHT	750	1991		AGPA77	
TRIUMPH	800 AMERICA	800	2003	2006	AGPA72	AGPA76
TRIUMPH	800 BONNEVILLE	800	2001	2004	AGPA72	AGPA76
TRIUMPH	800 BONNEVILLE AMERICA	800	2002		AGPA72	AGPA76
TRIUMPH	800 BONNEVILLE T100 CENTENNIAL EDITION	800	2002	2004	AGPA72	AGPA76
TRIUMPH	800 BONNEVILLE T100 PAUL SMITH	800	2006	2008	AGPA72	AGPA76
TRIUMPH	800 SPEEDMASTER	800	2003	2004	AGPA72	AGPA76
TRIUMPH	800 TIGER	800	2011	2014	AGPA72	AGPP89
TRIUMPH	800 TIGER XC	800	2011	2015	AGPA72	AGPP89
TRIUMPH	800 TIGER XC ABS	800	2012	2014	AGPA72	AGPP89
TRIUMPH	800 TIGER XCR	800	2015		AGPA72	AGPP89
TRIUMPH	800 TIGER XR	800	2015		AGPA72	AGPP89
TRIUMPH	800 TIGER XRX	800	2015		AGPA72	AGPP89
TRIUMPH	900 ADVENTURER	900	1996		AGPA72	
TRIUMPH	900 AMERICA	900	2007		AGPA72	AGPA76
TRIUMPH	900 BONNEVILLE	900	2009			AGPA76
TRIUMPH	900 BONNEVILLE	900	2005	2009	AGPA72	
TRIUMPH	900 BONNEVILLE	900	2005	2008		AGPA77
TRIUMPH	900 BONNEVILLE NEWCHURCH	900	2015		AGPA72	AGPA76
TRIUMPH	900 BONNEVILLE SE	900	2009		AGPA72	AGPA76
TRIUMPH	900 BONNEVILLE SPIRIT	900	2015		AGPA72	AGPA76
TRIUMPH	900 BONNEVILLE T100	900	2005	2009	AGPA72	AGPA76
TRIUMPH	900 BONNEVILLE T214	900	2015		AGPA72	
TRIUMPH	900 BONNEVILLE T214	900	2015		AGPA76	AGPA76
TRIUMPH	900 DAYTONA	900	1991	1994	AGPA58	
TRIUMPH	900 Daytona	900	1991	1994	AGPA223	
TRIUMPH	900 DAYTONA SUPER III	900	1994	1997	AGPA196	
TRIUMPH	900 DAYTONA, SPRINT	900	1994		AGPA58	AGPA77
TRIUMPH	900 Daytona, Sprint	900	1994		AGPA223	
TRIUMPH	900 DAYTONA, SPRINT LEFT/ REAR	900	1993			AGPA76
TRIUMPH	900 DAYTONA, SPRINT RIGHT	900	1993		AGPA77	
TRIUMPH	900 LEGEND TT	900	1999		AGPA72	
TRIUMPH	900 SCRAMBLER	900	2006		AGPA72	AGPA76
TRIUMPH	900 SPEED TRIPLE	900	1994		AGPA58	AGPA77
TRIUMPH	900 Speed Triple	900	1994	1996	AGPA223	
TRIUMPH	900 SPEEDMASTER	900	2005		AGPA72	AGPA76
TRIUMPH	900 THRUXTON	900	2004		AGPA72	AGPA76
TRIUMPH	900 THRUXTON ACE	900	2015		AGPA72	AGPA76
TRIUMPH	900 THUNDERBIRD	900	1996		AGPA72	
TRIUMPH	900 THUNDERBIRD SPORT	900	2003		AGPA72	
TRIUMPH	900 TIGER	900	1999	2000	AGPA72	
TRIUMPH	900 TIGER LEFT/REAR	900	1993	1998	AGPA76	AGPA76
TRIUMPH	900 TIGER RIGHT	900	1993	1998	AGPA77	
TRIUMPH	900 TRIDENT LEFT/REAR	900	1991		AGPA76	AGPA76
TRIUMPH	900 TRIDENT RIGHT	900	1991		AGPA77	
TRIUMPH	900 TROPHY	900	1996		AGPA58	
TRIUMPH	900 Trophy	900	1996		AGPA223	
TRIUMPH	900 TROPHY LEFT/REAR	900	1991	1995	AGPA76	AGPA76
TRIUMPH	900 TROPHY RIGHT	900	1991	1995	AGPA77	
TRIUMPH	T509 900 SPEED TRIPLE	900	1997	1998	AGPA58	AGPA76
TRIUMPH	T509 900 Speed Triple	900	1997	2001	AGPA223	
TRIUMPH	T595 950 DAYTONA	950	1996	1998	AGPA58	AGPA76
TRIUMPH	T595 950 Daytona	950	1996	1998	AGPA223	
TRIUMPH	955 DAYTONA	955	1999		AGPA58	AGPA76
TRIUMPH	955 DAYTONA CENTENNIAL	955	2002		AGPA58	AGPA76
TRIUMPH	955 Daytona Centennial	955	2002		AGPA223	
TRIUMPH	955 Daytona from VIN 132513	955	1999		AGPA223	
TRIUMPH	955 Daytona to VIN 132512	955	1999		AGPA223	
TRIUMPH	955 SPEED TRIPLE	955	1999		AGPA58	AGPA76
TRIUMPH	955 Speed Triple	955	1999		AGPA223	
TRIUMPH	955 SPRINT RS	955	2000		AGPA58	AGPA76
TRIUMPH	955 Sprint RS	955	2000		AGPA223	
TRIUMPH	955 SPRINT ST	955	1999	2004	AGPA58	AGPA76
TRIUMPH	955 Sprint ST	955	1999	2004	AGPA223	
TRIUMPH	955 TIGER	955	2004	2006	AGPA72	AGPA77
TRIUMPH	955 TIGER	955	2001	2004	AGPA72	AGPA72
TRIUMPH	1000 DAYTONA	1000	1991	1995	AGPA58	
TRIUMPH	1000 Daytona	1000	1992		AGPA223	
TRIUMPH	1000 TROPHY LEFT/REAR	1000	1991	1995	AGPA76	AGPA76
TRIUMPH	1000 TROPHY RIGHT	1000	1991	1995	AGPA77	
TRIUMPH	1050 SPEED TRIPLE (RAD.CAL)	1050	2005	2007	AGPA38	
TRIUMPH	1050 SPEED TRIPLE (RAD.CAL)	1050	2005	2008		AGPA76

PASTIGLIE BRAKE PADS

INDICE ANALITICO PASTIGLIE / pads alphabetical index

MARCA Brand	MODELLO Model	CC	DA From	A To	ANT. Front	POST. Rear
TRIUMPH	1050 SPEED TRIPLE (RAD.CAL)	1050	2008		AGPA112	
TRIUMPH	1050 SPRINT GT ABS	1050	2011		AGPA58	AGPA76
TRIUMPH	1050 Sprint GT ABS	1050	2011		AGPA223	
TRIUMPH	1050 SPRINT ST	1050	2005		AGPA58	AGPA76
TRIUMPH	1050 Sprint ST	1050	2005		AGPA223	
TRIUMPH	1050 TIGER	1050	2007		AGPA38	AGPA77
TRIUMPH	1050 TIGER SE (RAD.CAL)	1050	2009		AGPA38	AGPA77
TRIUMPH	1050 TIGER SPORT	1050	2015		AGPA38	AGPA76
TRIUMPH	1200 DAYTONA	1200	1991		AGPA58	
TRIUMPH	1200 Daytona	1200	1991		AGPA223	
TRIUMPH	1200 TIGER EXPLORER	1200	2012		AGPA58	AGPA76
TRIUMPH	1200 Tiger Explorer	1200	2012		AGPA223	
TRIUMPH	1200 TROPHY	1200	1996	2003	AGPA58	
TRIUMPH	1200 Trophy	1200	1996	2003	AGPA223	
TRIUMPH	1200 TROPHY LEFT/REAR	1200	1991	1995	AGPA76	AGPA76
TRIUMPH	1200 TROPHY RIGHT	1200	1991	1995	AGPA77	
TRIUMPH	1200 TROPHY SE	1200	2013		AGPA21	AGPA76
TRIUMPH	1600 THUNDERBIRD	1600	2009		AGPA58	AGPA92
TRIUMPH	1600 Thunderbird	1600	2009		AGPA223	
TRIUMPH	1700 THUNDERBIRD COMMANDER	1700	2014		AGPA58	AGPA92
TRIUMPH	1700 Thunderbird Commander	1700	2014		AGPA223	
TRIUMPH	1700 THUNDERBIRD LT	1700	2014		AGPA58	AGPA92
TRIUMPH	1700 Thunderbird LT	1700	2014		AGPA223	
TRIUMPH	1700 THUNDERBIRD STORM	1700	2011		AGPA58	AGPA92
TRIUMPH	1700 Thunderbird Storm	1700	2011		AGPA223	
TRIUMPH	2300 ROCKET III	2294	2004		AGPA58	
TRIUMPH	2300 ROCKET III CLASSIC	2294	2007		AGPA58	
TRIUMPH	2300 ROCKET III ROADSTER	2294	2010		AGPA58	
TRIUMPH	2300 ROCKET III TOURING	2294	2013		AGPA58	
TRIUMPH	2300 ROCKET X	2294	2015		AGPA58	
TRIUMPH	2300 ROCKET III	2300	2004		AGPA223	AGPA92
TRIUMPH	2300 Rocket III Classic	2300	2007		AGPA223	AGPA92
TRIUMPH	2300 ROCKET III ROADSTER	2300	2010		AGPA223	AGPA92
TRIUMPH	2300 Rocket III Touring	2300	2013		AGPA223	AGPA92
TRIUMPH	2300 ROCKET X	2300	2015		AGPA223	AGPA92
VERTEMATI						
VERTEMATI	SR 450 MOTARD RACING	450	2004		AGPA29	
VERTEMATI	C 500 CROSS	500	2002		AGPA29	
VERTEMATI	E 500 ENDURO	500	2002		AGPA29	
VERTEMATI	E 501 ENDURO	501	2002		AGPA29	
VERTEMATI	S 501 E MOTARD	501	2004		AGPA29	
VERTEMATI	S 501 SUPERMOTARD	501	2002		AGPA29	
VERTEMATI	S 501 SUPERMOTO	501	2001		AGPA29	
VERTEMATI	S 570 E MOTARD	570	2003		AGPA29	
VERTEMATI	SR 600 MOTARD RACING	600	2004		AGPA29	
VICTORY						
VICTORY	1500 KINGPIN	1500	2004	2005	AGPA96	AGPA92
VICTORY	1500 TOURING CRUISER	1500	2003	2006	AGPA96	AGPA92
VICTORY	1500 V92C CRUISER	1500	1998	2002	AGPA96	AGPA92
VICTORY	1500 V92C DELUXE	1500	2001	2002	AGPA96	AGPA92
VICTORY	1500 V92SC SPORT CRUISER	1500	2000	2002	AGPA96	AGPA92
VICTORY	1500 VEGAS	1500	2003	2005	AGPA96	AGPA92
VICTORY	1500 VEGAS 8-BALL	1500	2005		AGPA96	AGPA92
VICTORY	1634 HAMMER	1634	2005	2007	AGPA96	AGPA92
VICTORY	1634 HAMMER	1634	2008		AGPA38	
VICTORY	1634 HAMMER S	1634	2006	2008	AGPA96	AGPA92
VICTORY	1634 KINGPIN	1634	2006	2007	AGPA96	AGPA92
VICTORY	1634 KINGPIN ALL MODELS	1634	2008		AGPA38	
VICTORY	1634 KINGPIN TOUR	1634	2006	2007	AGPA96	AGPA92
VICTORY	1634 VEGAS	1634	2006	2007	AGPA96	AGPA92
VICTORY	1634 VEGAS	1634	2008		AGPA38	
VICTORY	1634 VEGAS 8-BALL	1634	2006	2007	AGPA96	AGPA92
VICTORY	1634 VEGAS 8-BALL	1634	2008		AGPA38	
VICTORY	1634 VEGAS JACKPOT	1634	2006	2007	AGPA96	AGPA92
VICTORY	1634 VEGAS JACKPOT	1634	2008		AGPA38	
VICTORY	1731 BOARDWALK	1731	2013		AGPA38	
VICTORY	1731 CROSS COUNTRY	1731	2010		AGPA38	
VICTORY	1731 CROSS COUNTRY 8-BALL	1731	2014		AGPA38	
VICTORY	1731 CROSS COUNTRY TOUR	1731	2012		AGPA38	
VICTORY	1731 CROSS ROADS	1731	2010		AGPA38	
VICTORY	1731 CROSS ROADS 8-BALL	1731	2014		AGPA38	
VICTORY	1731 CROSS ROADS CLASSIC	1731	2014		AGPA38	
VICTORY	1731 GUNNER	1731	2015		AGPA38	
VICTORY	1731 HAMMER	1731	2009		AGPA38	
VICTORY	1731 HAMMER 8-BALL	1731	2010		AGPA38	
VICTORY	1731 HAMMER S	1731	2009		AGPA38	
VICTORY	1731 HARD-BALL	1731	2012		AGPA38	
VICTORY	1731 HIGH-BALL 12- H.HS	1731	2012		AGPA38	
VICTORY	1731 JACKPOT	1731	2010		AGPA38	
VICTORY	1731 JUDGE	1731	2013		AGPA38	
VICTORY	1731 KINGPIN	1731	2010		AGPA38	
VICTORY	1731 KINGPIN 8-BALL	1731	2010		AGPA38	
VICTORY	1731 MAGNUM	1731	2015		AGPA38	

ACCOSSATO

PASTIGLIE BRAKE PADS

INDICE ANALITICO PASTIGLIE / pads alphabetical index

MARCA Brand	MODELLO Model	CC	DA From	A To	ANT. Front	POST. Rear
VICTORY	1731 VEGAS	1731	2010		AGPA38	
VICTORY	1731 VEGAS 8-BALL	1731	2010		AGPA38	
VICTORY	1731 VEGAS JACKPOT	1731	2009		AGPA38	
VOR						
VOR	400 CROSS	400	2000	2001	AGPA29	
VOR	400 ENDURO	400	2000	2001	AGPA29	
VOR	EN 400	400	2000	2001	AGPA29	
VOR	MX 400	400	2002		AGPA29	
VOR	SM 400	400	2002		AGPA32	
VOR	EN 450	450	2002		AGPA29	
VOR	MX 450	450	2002		AGPA29	
VOR	SM 450	450	2002		AGPA32	
VOR	500 492 ENDURO	500	1999		AGPA29	
VOR	500 492 SUPER MOTARD	500	2000	2001	AGPA32	
VOR	500 495 CROSS	500	1999		AGPA29	
VOR	EN 530	524	2002		AGPA29	
VOR	MX 530	524	2002		AGPA29	
VOR	SM 530	528	2002		AGPA32	
VOXAN						
VOXAN	1000 CAFE RACER	1000	2001		AGPA32	AGPA42
VOXAN	1000 CHARADE RACING	1000	2006			AGPA194
VOXAN	1000 ROADSTER	1000	2001		AGPA32	AGPA42
VOXAN	1000 SCRAMBLER	1000	2001	2003	AGPA72	
VOXAN	VB1 1000 EVO	1000	2004		AGPA96	AGPA42
WRM						
WRM	450 MX	450	2006		AGPA29	AGPP80
YAMAHA						
YAMAHA	50 AXIS PRO FOOT	50	1992		AGPA84	
YAMAHA	50 BW'S R	50	1995		AGPA13	
YAMAHA	50 CYGNUS	50	1996		AGPA89	
YAMAHA	50 SLIDER	50	2000		AGPA19	
YAMAHA	50 ZUMA	50	1996		AGPA13	
YAMAHA	BW 50 BUMP	50	1997		AGPA13	
YAMAHA	BW 50 NEXT GENERATION	50	1996		AGPA13	
YAMAHA	BW 50 SPORTS SPEC R	50	2002		AGPA13	
YAMAHA	BW 50 SPY	50	1995	1999	AGPA13	
YAMAHA	BW 50 SPY 00	50	2000		AGPA13	
YAMAHA	CR 50 TARGET	50	1991		AGPA84	
YAMAHA	CR 50 Z	50	1991	1992	AGPA84	
YAMAHA	DT 50 R	50	1998	2003	AGPA15	
YAMAHA	DT 50 R	50	1989	1997	AGPA89	
YAMAHA	DT 50 R	50	2004			AGPA49
YAMAHA	DT 50 X SUPERMOTARD	50	2004		AGPA20	AGPA49
YAMAHA	EW 50 SLIDER	50	2000		AGPA13	
YAMAHA	FRZ 50	50	1990		AGPA77	AGPA167
YAMAHA	FZR 50	50	1992		AGPA76	AGPP99
YAMAHA	JOG 50 (SPAIN)	50	1988		AGPA84	
YAMAHA	JOG 50 R	50			AGPA84	
YAMAHA	JOG-Z 50	50	1988	1989	AGPA84	
YAMAHA	JOG-Z 50 (ITALIA)	50	1990		AGPA14	
YAMAHA	RS 50 CHAMP	50	1988		AGPA84	
YAMAHA	RZ 50 (5FC1/2)	50	2002		AGPA24	
YAMAHA	TDR 50	50	1990		AGPA89	AGPA89
YAMAHA	TZM 50 R	50	1994		AGPA23	
YAMAHA	TZM 50 R	50	1994		AGPA89	

MARCA Brand	MODELLO Model	CC	DA From	A To	ANT. Front	POST. Rear
YAMAHA	TZR 50	50	2003		AGPA20	
YAMAHA	TZR 50	50	1990	2002	AGPA23	
YAMAHA	TZR 50	50	1990	1992	AGPA89	
YAMAHA	WHY 50	50	1997		AGPA13	
YAMAHA	YE 50 ZEST	50	1992	1995	AGPA14	
YAMAHA	YE 50 ZEST (JAPAN)	50	1992	1995	AGPA84	
YAMAHA	YH 50	50	1998		AGPA14	
YAMAHA	YM 50 BREEZE	50	1994		AGPA13	
YAMAHA	YM 50 BREEZE, FIZZ	50	1995		AGPA14	
YAMAHA	YQ 50 AEROX	50	1997	2001	AGPA14	AGPA19
YAMAHA	YSR 50 A, B	50	1990	1991	AGPA89	
YAMAHA	YSR 50 D	50	1992		AGPA89	
YAMAHA	YSR 50 T,U,W	50	1987	1989	AGPA89	
YAMAHA	DT 80 LC	80	1981	1984	AGPA176	
YAMAHA	DT 80 LC-2	80	1985	1992	AGPA89	
YAMAHA	RD 80 LC	80	1981		AGPA176	
YAMAHA	RD 80 LC	80	1983		AGPA89	
YAMAHA	TZR 80	80	1992		AGPA84	AGPA89
YAMAHA	TZR 80	80		1991	AGPA167	
YAMAHA	YD 80	80	1989		AGPA76	AGPP99
YAMAHA	YE 80 ZEST (JAPAN)	80	1993		AGPA84	
YAMAHA	YE 80 ZEST (ITALIA)	80	1993		AGPA14	
YAMAHA	YSR 80	80	1986		AGPA89	
YAMAHA	YZ 80 E,F,G,H1,J1	80	1993	2001		AGPA111
YAMAHA	90 AXIS PRO FOOT	90	1994		AGPA84	
YAMAHA	CR 90 TARGET	90	1991		AGPA84	
YAMAHA	JOG 90	90	1990		AGPA84	
YAMAHA	YA 90 AXIS	90	1990		AGPA84	
YAMAHA	YFM 90 RY RAPTOR	90	2009			AGPA98
YAMAHA	YZ 85 , LW	85	2002			AGPA111
YAMAHA	FJ 100 L, LC	100	1984		AGPA54	AGPA54
YAMAHA	RX 100	100	1984		AGPA176	
YAMAHA	105 CRYPTON	114	1998		AGPA89	
YAMAHA	115 D'ELIGHT	115	2014		AGPA170	
YAMAHA	RX 115 S	115	1982		AGPA176	
YAMAHA	125 MAXTER	125	2001			AGPA42
YAMAHA	125 Xenter	125	2012		AGPA235	
YAMAHA	BWs 125	125	2010		AGPA235	
YAMAHA	DT 125 LC	125	1985	1987	AGPA89	
YAMAHA	DT 125 R	125	1996	1998	AGPA89	AGPA89
YAMAHA	DT 125 R, ELECTRIC	125	1988	2003	AGPA89	AGPA89
YAMAHA	DT 125 X SUPERMOTARD	125	2005		AGPA92	
YAMAHA	MT 125	125	2014		AGPA101	AGPA173
YAMAHA	NXC 125 CYGNUS X	125	2004	2010	AGPA85	
YAMAHA	NXC CYGNUS 125	125	2010		AGPA183	
YAMAHA	RD 125 LC	125	1982	1984	AGPA176	
YAMAHA	RD LC 125	125	1985	1987	AGPA167	
YAMAHA	SR 125	125	1992	1996	AGPA176	
YAMAHA	SR 125	125	1997	2002	AGPA22	
YAMAHA	SR 125 FLAME	125	1996		AGPA89	
YAMAHA	SX 125 R	125	1988		AGPA88	
YAMAHA	TDR 125 (4GW/GX1/2/3/4)	125	1993	2003	AGPA22	
YAMAHA	TDR 125 (ITALY)	125	1990	1993		AGPA98
YAMAHA	TDR 125 R	125	1993	2003	AGPA22	AGPA89

PASTIGLIE BRAKE PADS

INDICE ANALITICO PASTIGLIE / pads alphabetical index

MARCA Brand	MODELLO Model	CC	DA From	A To	ANT. Front	POST. Rear
YAMAHA	TDR 125 R (3SH2/3XE2) LIGHTBURNER	125	1993	1994		AGPA194
YAMAHA	TW 125	125	1999	2002	AGPA24	
YAMAHA	TZ 125	125	1997		AGPA58	
YAMAHA	TZ 125	125	1997		AGPA223	
YAMAHA	TZR 125	125	1987	1988	AGPA167	
YAMAHA	TZR 125	125	1989	1992	AGPA54	AGPA167
YAMAHA	TZR 125	125	1993	1994		AGPA54
YAMAHA	TZR 125	125	1994		AGPA97	
YAMAHA	TZR 125	125	1993		AGPA22	
YAMAHA	TZR 125 (3JB / 4JB / 4HW / 4HX)	125	1993	1995	AGPA22	
YAMAHA	TZR 125 R	125	1994		AGPA97	AGPA167
YAMAHA	TZR 125 R (4DL1 / 4DL2) BREMBO CALIPER	125	1991	1993		AGPA194
YAMAHA	TZR 125 RR (4DL3) BREMBO CALIPER	125	1994	1995		AGPA194
YAMAHA	VP 125 X CITY	125	2008		AGPA13	AGPA42
YAMAHA	WR 125	125	1991	1997	AGPA76	AGPP99
YAMAHA	WR 125	125	1998	2002	AGPA51	
YAMAHA	WR 125 R, XY	125	2009		AGPA72	
YAMAHA	WR 250 X	125	2008		AGPA72	
YAMAHA	XC 125 CYGNUS F	125	2000		AGPA89	
YAMAHA	XC 125 F	125	2000		AGPA89	
YAMAHA	XC 125 TR CYGNUS, R	125	1996		AGPA89	
YAMAHA	XC 125 VITY	125	2008		AGPA170	
YAMAHA	XN 125 TEOS	125	2000	2001	AGPA13	
YAMAHA	XQ 125 MAXSTER	125	2001	2003	AGPA29	
YAMAHA	XT 125 R	125	2005		AGPA49	AGPA18
YAMAHA	XT 125 X SUPERMOTARD	125	2005			AGPA18
YAMAHA	XTZ 125	125	2005		AGPA76	
YAMAHA	XV 125 VIRAGO	125	1997		AGPA22	
YAMAHA	XVS 125 DRAG STAR	125	2000		AGPA22	
YAMAHA	YBR 125	125	2008		AGPA170	
YAMAHA	YBR 125	125	2006	2007	AGPA89	
YAMAHA	YP 125 MAJESTY	125	1998	2009	AGPA29	AGPA42
YAMAHA	YP 125 X-MAX	125	2006	2010		AGPA42
YAMAHA	YP 125 X-MAX ABS	125	2011			AGPA24
YAMAHA	YP 125 X-MAX BUSINESS ABS	125	2011			AGPA24
YAMAHA	YP 125 X-MAX SPORT ED.	125	2011			AGPA42
YAMAHA	YP R 125 X MAX	125	2006	2009	AGPA86	
YAMAHA	YP R 250 X MAX	125	2005	2009	AGPA86	
YAMAHA	YW 125 Z	125	2010		AGPA235	
YAMAHA	YZ 125	125	2003	2007		AGPP106
YAMAHA	YZ 125	125	2008		AGPA110	AGPP106
YAMAHA	YZ 125	125	1990	1997	AGPA76	
YAMAHA	YZ 125	125	1990	1995		AGPP99
YAMAHA	YZ 125	125	1998	2007	AGPA51	
YAMAHA	YZ 125 U	125	1988			AGPA89
YAMAHA	YZ 125 V, W	125	1989		AGPA76	
YAMAHA	YZF 125 R	125	2008	2013	AGPA29	AGPA173
YAMAHA	YZF 125 R	125	2014		AGPA101	AGPA173
YAMAHA	135 CRYPTON X	135	2008		AGPA170	
YAMAHA	150 TEOS	150	2001	2002	AGPA13	
YAMAHA	150 Xenter	150	2012		AGPA235	
YAMAHA	XC 150 FLY ONE	150	1992		AGPA89	
YAMAHA	XC 150 FLY ONE R	150	1998		AGPA89	
YAMAHA	XQ 150 MAXSTER	150	2001		AGPA29	AGPA42
YAMAHA	YP 150 MAJESTY	150	2001		AGPA29	AGPA42
YAMAHA	DT 175	175	2000		AGPA24	
YAMAHA	RT 180 G,H	180	1995	1996	AGPA89	
YAMAHA	YP 180 R MAJESTY	180	2004			AGPA42
YAMAHA	YP 180 R MAJESTY	180	2003	2004	AGPA29	
YAMAHA	DT 200 R	200	1985	1987	AGPA89	
YAMAHA	DT 200 R	200	1989		AGPA89	AGPA89
YAMAHA	DT 200 WR	200	1991	1993	AGPA76	AGPP99
YAMAHA	IT 200	200	1985		AGPA89	
YAMAHA	SDR 200	200	1988	1989	AGPA167	AGPA167
YAMAHA	SX 200 R	200	1988		AGPA88	
YAMAHA	TT 200	200	1986		AGPA89	
YAMAHA	TW 200	200	1994		AGPA24	
YAMAHA	TW 200	200	2001		AGPA24	
YAMAHA	WR 200	200	1991	1992	AGPA76	AGPP99
YAMAHA	YFS 200 R BLASTER	200	2003	2006	AGPA88	AGPA111
YAMAHA	225 SEROW	225	1985		AGPA89	
YAMAHA	BRONCO 225	225	1997		AGPA24	
YAMAHA	CELLOW 225	225	1997		AGPA24	
YAMAHA	TT 225 S,T	225	1986	2000	AGPA89	
YAMAHA	TTR 225	225	2001		AGPA89	
YAMAHA	XT 225	225	2001		AGPA24	
YAMAHA	XT 225 E-H	225	1992	2000	AGPA89	
YAMAHA	XT 225 SEROW	225	1986		AGPA89	
YAMAHA	TT-R 230	230	2005		AGPA76	
YAMAHA	FZ 250 PHAZER N, S	250	1985	1986	AGPA54	
YAMAHA	FZ 250 R	250	1985		AGPA167	
YAMAHA	FZR 250	250	1987	1988	AGPA197	
YAMAHA	FZR 250	250	1987	1988	AGPA145	
YAMAHA	FZR 250	250	1987	1988		AGPA167
YAMAHA	FZR 250 R	250	1989		AGPA97	AGPA167
YAMAHA	FZX 250 ZEAL	250	1991	1992	AGPA71	AGPA167
YAMAHA	IT 250	250	1985		AGPA89	
YAMAHA	R1-Z 250	250	1990	1988		AGPA167
YAMAHA	RD 250 LC	250	1983		AGPA176	AGPA54
YAMAHA	RZ 250 RR	250	1988		AGPA167	AGPA167
YAMAHA	RZR 250	250	1990		AGPA167	AGPA167
YAMAHA	SRV 250	250	1992	1997	AGPA71	
YAMAHA	SRX 250	250	1984		AGPA167	
YAMAHA	SRX 250 T, TC	250	1987		AGPA167	
YAMAHA	TDR 250	250	1988	1992	AGPA145	AGPA167
YAMAHA	TDR 250	250	1988	1992	AGPA197	
YAMAHA	TT 250 R	250	1993		AGPA76	AGPP99
YAMAHA	TY 250 R	250	1991	1992	AGPA18	
YAMAHA	TY 250 Z	250	1993	1996	AGPA18	AGPA18
YAMAHA	TY 250 Z (SCOTTISH)	250	1996		AGPA89	AGPP99
YAMAHA	TZ 250	250	1990	2001	AGPA58	
YAMAHA	TZ 250	250	1990	2001	AGPA223	
YAMAHA	TZ 250 (RAD.CAL)	250	2002		AGPA58	
YAMAHA	TZ 250 (Rad.cal)	250	2002		AGPA223	
YAMAHA	TZR 250	250	1987	1992	AGPA197	AGPA167
YAMAHA	TZR 250	250	1987	1988	AGPA145	
YAMAHA	TZR 250	250	1989	1992	AGPA97	
YAMAHA	TZR 250 R	250	1994		AGPA32	
YAMAHA	VP 250 X-CITY	250	2007			AGPA24
YAMAHA	WR 250	250	1990		AGPA76	AGPP99
YAMAHA	WR 250	250	1992	1997	AGPA76	AGPP99
YAMAHA	WR 250	250	1998	2002	AGPA51	

ACCOSSATO

PASTIGLIE BRAKE PADS

INDICE ANALITICO PASTIGLIE / pads alphabetical index

MARCA Brand	MODELLO Model	CC	DA From	A To	ANT. Front	POST. Rear
YAMAHA	WR 250 F	250	2003	2013		AGPP106
YAMAHA	WR 250 F	250	2001	2013	AGPA51	
YAMAHA	WR 250 F EFI	250	2015		AGPA51	AGPP106
YAMAHA	WR 250 R	250	2008		AGPA51	AGPP106
YAMAHA	WR 250 X	250	2008			AGPP106
YAMAHA	WR 250 ZB	250	1991		AGPA76	AGPP99
YAMAHA	XG 250 TRICKER	250	2005		AGPA24	AGPP99
YAMAHA	XT 250	250	2008		AGPA24	AGPP99
YAMAHA	XV 240 VIRAGO	240	1992		AGPA176	
YAMAHA	XV 250 ROUTE 66	250	1988	1990	AGPA176	
YAMAHA	XV 250 S VIRAGO	250	1995	1998	AGPA22	
YAMAHA	XV 250 VIRAGO	250	1988		AGPA176	
YAMAHA	XVS 250 DRAG STAR	250	2001		AGPA22	
YAMAHA	YBR 250	250	2007		AGPA77	
YAMAHA	YD 250 S	250	1990		AGPA54	
YAMAHA	YFM 250 AN BRUIN 2X4	250	2005		AGPA88	
YAMAHA	YFM 250 BEAR TRACKER	250	2001		AGPA88	
YAMAHA	YFM 250 RAPTOR LEFT/REAR	250	2009			AGPA111
YAMAHA	YP 250 D MAJESTY DX	250	1998		AGPA22	AGPA24
YAMAHA	YP 250 MAJESTY	250	1996		AGPA22	
YAMAHA	YP 250 MAJESTY DX/ABS	250	1999		AGPA22	AGPA24
YAMAHA	YP 250 X-MAX	250	2005	2010		AGPA24
YAMAHA	YP R 250 X-MAX	250	2014			AGPP188
YAMAHA	YTZ 250 N, S TRI MOTO	250	1985	1986	AGPA89	AGPA89
YAMAHA	YZ 250	250	1998	2007	AGPA51	
YAMAHA	YZ 250	250	2003	2007		AGPP106
YAMAHA	YZ 250	250	2008		AGPA110	AGPP106
YAMAHA	YZ 250 A	250	1990		AGPA76	AGPP99
YAMAHA	YZ 250 B1-J1	250	1991	1997	AGPA76	AGPP99
YAMAHA	YZ 250 F	250	2003	2006		AGPP106
YAMAHA	YZ 250 F	250	2007	2009		AGPP106
YAMAHA	YZ 250 F	250	2013			AGPP106
YAMAHA	YZ 250 F	250	2014			AGPP106
YAMAHA	YZ 250 F	250	2001	2006	AGPA51	
YAMAHA	YZ 250 F	250	2007	2013	AGPA110	
YAMAHA	YZ 250 F EFI	250	2014		AGPA110	
YAMAHA	YZ 250 FX Efi	250	2015		AGPA110	AGPP106
YAMAHA	YZ 250 U	250	1988			AGPA89
YAMAHA	YZ 250 V,W,WRW	250	1989		AGPA76	
YAMAHA	YZ 250 WRA,WRB	250	1990	1991	AGPA76	AGPP99
YAMAHA	300 R3	300	2015		AGPA170	AGPA170
YAMAHA	XC 300 VERSITY	300	2003	2006	AGPA29	AGPA29
YAMAHA	YFM 300 WARRIOR	300	1989		AGPA88	
YAMAHA	RD 350 LC	350	1985		AGPA167	AGPA167
YAMAHA	RD 350 LC YPVS	350	1983	1984	AGPA176	AGPA54
YAMAHA	RD 350 LC, F	350	1985	1990	AGPA167	AGPA167
YAMAHA	RD 350 R	350	1991	1995	AGPA167	AGPA167
YAMAHA	RZ 350 F	350	1986	1988	AGPA167	AGPA167
YAMAHA	RZ 350 L, N, NC	350	1984	1985	AGPA176	AGPA54
YAMAHA	TT 350	350	1995		AGPA76	AGPP99
YAMAHA	XT 350	350	1985	1990	AGPA89	
YAMAHA	XT 350 B-H	350	1991	1996	AGPA89	
YAMAHA	YFM 350 BRUIN 2X4, 4X4	350	2004		AGPA88	
YAMAHA	YFM 350 FWB L, LC BIG BEAR	350	1999		AGPA88	
YAMAHA	YFM 350 FXG-FXM WOLVERINE	350	1995		AGPA88	AGPA111
YAMAHA	YFM 350 R RAPTOR	350	2004		AGPA111	
YAMAHA	YFM 350 XG, XH WARRIOR	350	1995	1996	AGPA88	AGPA111
YAMAHA	YFM 350 XT, XU WARRIOR	350	1987	1988	AGPA89	AGPA111
YAMAHA	YFM 350 XW, XA-M WARRIOR	350	1989		AGPA88	AGPA88
YAMAHA	YFZ 350 A-M BANSHEE	350	1990	2006	AGPA88	AGPA111
YAMAHA	YFZ 350 T-W BANSHEE	350	1987	1989	AGPA89	AGPA111
YAMAHA	YZ 360	360	1989		AGPA76	
YAMAHA	400 ARTESIA	400	1991		AGPA166	AGPA89
YAMAHA	DR-Z 400 S /E	400	2000		AGPA51	
YAMAHA	DR-Z 400 SM	400	2005		AGPA51	
YAMAHA	FZ 400 N	400	1987		AGPA54	AGPA167
YAMAHA	FZ 400 R	400	1985		AGPA167	AGPA167
YAMAHA	FZR 400	400	1987	1990		AGPA167
YAMAHA	FZR 400	400	1987		AGPA54	
YAMAHA	FZR 400	400	1988	1990	AGPA145	
YAMAHA	FZR 400 (3EN1)	400	1988		AGPA197	
YAMAHA	FZR 400 A	400		1990		AGPA167
YAMAHA	FZR 400 R	400	1991		AGPA97	AGPA167
YAMAHA	FZR 400 R (3EN2)	400	1989		AGPA197	
YAMAHA	FZR 400 R SP (2TK-EXUP)	400	1987		AGPA197	
YAMAHA	SR 400	400	2014		AGPA22	
YAMAHA	SRX 400	400	1985	1987		AGPA167
YAMAHA	SRX 400	400	1987		AGPA145	
YAMAHA	SRX 400 (3VN)	400	1990	1996	AGPA197	
YAMAHA	WR 400 F	400	1998	2000	AGPA51	
YAMAHA	WR 400 F	400	1998			AGPP99
YAMAHA	XJ 400	400	1982		AGPA176	AGPA176
YAMAHA	XJ 400 DIVERSION	400	1991		AGPA71	
YAMAHA	XJ 400 DIVERSION	400	1991			AGPA167
YAMAHA	XJR 400 R	400	1995		AGPA96	AGPA54
YAMAHA	XJR 400 R	400	1993	1996	AGPA22	
YAMAHA	XS 400	400	1985		AGPA176	
YAMAHA	XS 400 DOHC	400	1982		AGPA176	
YAMAHA	XS 400 RJ, RK, J, K	400	1982	1983	AGPA176	
YAMAHA	XS 400 Z	400	1983		AGPA54	AGPA54
YAMAHA	XT 400	400	1986		AGPA89	
YAMAHA	YFM 400 FAM KODIAK	400	2000		AGPA88	AGPA113
YAMAHA	YFM 400 FAR KODIAK AUTOMATIC	400	2003		AGPA88	
YAMAHA	YFM 400 FWN BIG BEAR 4WD	400	2000		AGPA88	AGPA113
YAMAHA	YFM 400 FWNH BIG BEAR-BUCKMASTER 4WD	400	2000		AGPA88	AGPA113
YAMAHA	YFM 400 N BIG BEAR 2WD	400	2000		AGPA88	AGPA113
YAMAHA	YP 400 MAJESTY	400	2004		AGPA71	AGPP92
YAMAHA	YP 400 MAJESTY	400	2005		AGPA22	AGPP92
YAMAHA	YP 400 X-MAX	400	2013			AGPA24

PASTIGLIE BRAKE PADS

INDICE ANALITICO PASTIGLIE / pads alphabetical index

MARCA Brand	MODELLO Model	CC	DA From	A To	ANT. Front	POST. Rear
YAMAHA	YZ 400 F	400	1998	1999	AGPA51	
YAMAHA	YZ 400 F	400	1998			AGPP99
YAMAHA	WR 426 F	426	2001	2002	AGPA51	
YAMAHA	YZ 426 F	426	2000	2002	AGPA51	
YAMAHA	RMX 450 Z EFI	450	2010		AGPA51	
YAMAHA	RM-Z 450	450	2005	2007	AGPA51	
YAMAHA	RM-Z 450 EFI	450	2008		AGPA51	
YAMAHA	WR 450 F	450	2003	2015		AGPP106
YAMAHA	WR 450 F	450	2003		AGPA51	
YAMAHA	WR 450 F Efi	450	2016			AGPP106
YAMAHA	YFM 450 FA_ KODIAK	450	2003		AGPA88	AGPA113
YAMAHA	YFM 450 WOLVERINE	450	2006		AGPA88	AGPA113
YAMAHA	YFZ 450 S LEFT/REAR	450	2004	2006	AGPA77	
YAMAHA	YFZ 450 S LEFT/REAR	450	2004	2005		AGPA111
YAMAHA	YFZ 450 S RIGHT	450	2004	2006	AGPA76	
YAMAHA	YXR 450 RHINO LEFT/REAR	450	2006		AGPA76	
YAMAHA	YXR 450 RHINO RIGHT	450	2006		AGPA77	
YAMAHA	YZ 450 F	450	2003	2007	AGPA51	AGPP106
YAMAHA	YZ 450 F	450	2008	2009	AGPA110	AGPP106
YAMAHA	YZ 450 F Efi	450	2010			AGPP106
YAMAHA	YZ 450 F Efi	450	2014			AGPP106
YAMAHA	YZ 450 F EFI	450	2010	2014	AGPA110	
YAMAHA	YZ 450 FX Efi	450	2016			AGPP106
YAMAHA	FZR 500 (AUSTRIA)	500	1989		AGPA54	AGPA54
YAMAHA	FZR 500 R (AUSTRIA)	500	1990	1991		AGPA54
YAMAHA	RD 500	500	1983		AGPA54	AGPA54
YAMAHA	RD 500 LC	500	1984	1986	AGPA54	AGPA167
YAMAHA	RZ 500	500	1984	1986	AGPA54	AGPA167
YAMAHA	WR 500 B	500	1991		AGPA76	AGPA89
YAMAHA	WR 500 ZD,ZE	500	1992	1993	AGPA76	AGPP99
YAMAHA	XP 500 T MAX	500	2004	2007	AGPA22	
YAMAHA	XP 500 T MAX	500	2001	2003	AGPA71	AGPP81
YAMAHA	XP 500 TMAX	500	2008	2011	AGPA97	AGPP92
YAMAHA	XP 500 TMAX	500	2004	2005		AGPP92
YAMAHA	XP 500 TMAX TECH MAX	500	2011		AGPA97	AGPP92
YAMAHA	XS 500 DOHC	500	1982		AGPA176	
YAMAHA	XT 500	500	1986		AGPA89	
YAMAHA	XT 500 (AUSTRIA)	500	1983		AGPA176	
YAMAHA	XT 500 E (AUSTRIA)	500	1990	1996	AGPA166	AGPA89
YAMAHA	XV 500 K, VIRAGO	500	1983		AGPA176	
YAMAHA	XV 500 SE	500	1983		AGPA176	
YAMAHA	XP 530 TMAX	530	2012	2015	AGPA97	AGPP81
YAMAHA	XP 530 TMAX IRON MAX	530	2015		AGPA97	AGPP81
YAMAHA	XV 535 DX VIRAGO	534	1998	2003	AGPA71	
YAMAHA	XV 535 S VIRAGO	534	1996	2003	AGPA71	
YAMAHA	XZ 550	550	1983	1984	AGPA176	
YAMAHA	XZ 550 RJ, RK	550	1982	1983	AGPA176	
YAMAHA	XZ 550 S	550	1983	1984	AGPA176	
YAMAHA	DT 600 N	600	1985		AGPA89	
YAMAHA	FJ 600	600	1984		AGPA54	AGPA54
YAMAHA	FZ 6 600	600	2004		AGPA22	

MARCA Brand	MODELLO Model	CC	DA From	A To	ANT. Front	POST. Rear
YAMAHA	FZ 600	600	1986	1987	AGPA54	AGPA54
YAMAHA	FZ 600 S, SC	600	1986		AGPA54	AGPA167
YAMAHA	FZ6 600 FAZER	600	2004		AGPA22	
YAMAHA	FZ6 600 FAZER S2	600	2007		AGPA97	
YAMAHA	FZ6 600 FAZER S2 ABS	600	2007		AGPA97	
YAMAHA	FZ6 600 R	600	2009		AGPA22	
YAMAHA	FZ6 600 S2	600	2007		AGPA97	
YAMAHA	FZ6 600 S2 ABS	600	2007		AGPA97	
YAMAHA	FZ6R 600	600	2009			AGPP89
YAMAHA	FZR 600	600	1989		AGPA54	AGPA54
YAMAHA	FZR 600 / R	600	1990	1995	AGPA200	AGPA54
YAMAHA	FZR 600 R	600	1992	1995	AGPA147	
YAMAHA	FZS 600 FAZER	600	1998	2003	AGPA97	AGPA167
YAMAHA	FZS 600 S FAZER	600	2001	2003	AGPA97	AGPA167
YAMAHA	SRX 600	600	1986	1987	AGPA167	AGPA167
YAMAHA	SRX 600	600	1988	1989	AGPA145	
YAMAHA	SRX 600	600	1988	1990		AGPA167
YAMAHA	SRX 600 (3SX)	600	1990		AGPA197	
YAMAHA	TT 600	600	1985	1988	AGPA89	
YAMAHA	TT 600 E,S	600	1996		AGPA29	
YAMAHA	TT 600 R	600	1993	1995	AGPA29	
YAMAHA	TT 600 R	600	1993	1995		AGPP99
YAMAHA	TT 600 R	600	1998		AGPA29	
YAMAHA	XJ 600	600	1983	1991	AGPA54	AGPA54
YAMAHA	XJ 600 N	600	1998		AGPA22	
YAMAHA	XJ 600 N	600	1991	1997	AGPA71	AGPA167
YAMAHA	XJ 600 S DIVERSION	600	1998	2003	AGPA22	AGPA167
YAMAHA	XJ 600 S DIVERSION	600	1991	1997	AGPA71	AGPA167
YAMAHA	XJ6 600 DIVERSION	600	2009		AGPA22	AGPP89
YAMAHA	XT 600	600	1983	1986	AGPA176	
YAMAHA	XT 600 E	600	1990		AGPA166	AGPA89
YAMAHA	XT 600 K	600	1991		AGPA166	AGPA89
YAMAHA	XT 600 TENERE	600	1983	1984	AGPA176	
YAMAHA	XT 600 Z, TENERE	600	1987	1990		AGPA89
YAMAHA	XT 660 Z TENERE	600	2008		AGPA29	
YAMAHA	XT 660 Z TENERE ABS	600	2011		AGPA29	
YAMAHA	YFM 600 FWAK-FWAN 4X4 GRIZZLY	600	1998	2001	AGPA111	
YAMAHA	YX 600 RADIAN	600	1987	1990	AGPA54	
YAMAHA	YZF 600 R THUNDER CAT	600	1996	2003	AGPA97	AGPA54
YAMAHA	YZF 600 R6	600	1999	2002	AGPA97	
YAMAHA	YZF 600 R6	600	2003	2004	AGPA97	
YAMAHA	YZF 600 R6 (RAD.CAL)	600	2005	2006	AGPA97	
YAMAHA	DR 650 SE T-W	650	1996		AGPA51	
YAMAHA	XJ 650 83 H	650	1983		AGPA176	
YAMAHA	XJ 650 TURBO	650	1981	1982	AGPA176	
YAMAHA	XVS 650 A DRAG STAR CLASSIC	650	1998		AGPA71	
YAMAHA	XVS 650 DRAG STAR	650	1997		AGPA71	
YAMAHA	660 RHINO LEFT/REAR	660	2005		AGPA76	
YAMAHA	660 RHINO RIGHT	660	2005		AGPA77	
YAMAHA	MT-03 660	660	2006	2011	AGPA22	

ACCOSSATO

PASTIGLIE BRAKE PADS

INDICE ANALITICO PASTIGLIE / pads alphabetical index

MARCA Brand	MODELLO Model	CC	DA From	A To	ANT. Front	POST. Rear
YAMAHA	SZR 660	660	1996		AGPA32	AGPA31
YAMAHA	SZR 660	660	1996	1997		AGPA194
YAMAHA	XT 660 R	660	2004		AGPA92	
YAMAHA	XT 660 X	660	2004		AGPA96	
YAMAHA	XTZ 660 TENERE	660	1991	1998	AGPA166	AGPA89
YAMAHA	YFM 660 FWAP 4X4 GRIZZLY	660	2002		AGPA111	
YAMAHA	YFM 660 RN RAPTOR	660	2001		AGPA111	AGPA111
YAMAHA	FZ 700	700	1987		AGPA54	AGPA54
YAMAHA	FZX 700 FAZER	700	1987		AGPA54	AGPA54
YAMAHA	MT-07 700	700	2014		AGPA97	
YAMAHA	MT-07 700 MOTO CAGE	700	2015		AGPA97	
YAMAHA	XJ 700	700	1986		AGPA54	
YAMAHA	XJ 700 MAXIM	700	1985		AGPA54	AGPA54
YAMAHA	XV 700 L, LC	700	1984		AGPA54	
YAMAHA	XV 700 VIRAGO	700	1987		AGPA54	
YAMAHA	YFM 700 R RAPTOR LEFT/ REAR	700	2006	2008	AGPA76	
YAMAHA	YFM 700 R RAPTOR RIGHT	700	2006	2008	AGPA77	
YAMAHA	YFM 700 RY	700	2009		AGPA76	
YAMAHA	YFM 700 RY	700	2009		AGPA77	
YAMAHA	YXR 700 RHINO LEFT	700	2008		AGPA77	AGPA77
YAMAHA	YXR 700 RHINO RIGHT	700	2008		AGPA76	AGPA76
YAMAHA	750 MAXIM	750	1981			AGPA54
YAMAHA	FZ 750	750	1985	1986	AGPA54	AGPA54
YAMAHA	FZ 750	750	1989	1991	AGPA197	
YAMAHA	FZ 750 GENESIS	750	1987	1988	AGPA54	AGPA54
YAMAHA	FZ 750 GENESIS	750	1986		AGPA54	AGPA167
YAMAHA	FZ 750 GENESIS	750	1989	1992	AGPA145	AGPA54
YAMAHA	FZR 750 R	750	1989	1990	AGPA58	AGPA54
YAMAHA	FZR 750 R	750	1989	1992	AGPA223	
YAMAHA	FZR 750 R GENESIS	750	1987	1988	AGPA197	AGPA54
YAMAHA	FZX 750 FAZER	750	1986		AGPA54	AGPA54
YAMAHA	MT-09 850 TRACER (RAD.CAL)	750	2015		AGPA97	
YAMAHA	TX 750 A	750	1973	1976		AGPA54
YAMAHA	VF 750 VIRAGO	750	1988		AGPA54	
YAMAHA	XJ 750	750	1983	1984	AGPA54	AGPA54
YAMAHA	XJ 750 MAXIM	750	1982		AGPA176	
YAMAHA	XTZ 750 SUPER TENERE LEFT/REAR	750	1989	1995	AGPA76	
YAMAHA	XTZ 750 SUPER TENERE RIGHT	750	1989	1995	AGPA77	
YAMAHA	XV 750	750	1989	1992	AGPA54	
YAMAHA	XV 750 VIRAGO	750	1994		AGPA71	
YAMAHA	YZF 750 R / SP	750	1993	1997	AGPA196	AGPA54
YAMAHA	YZF 750 R7 0W02	750	1999		AGPA97	
YAMAHA	YZF 750 R7 0W02 RACE KIT	750	1999		AGPA130	
YAMAHA	800 FAZER 8	800	2010		AGPA97	
YAMAHA	FZ8 800	800	2010		AGPA97	
YAMAHA	MT-09 850 (RAD.CAL)	850	2014		AGPA97	
YAMAHA	MT-09 850 SPORT TRACKER (RAD.CAL)	850	2015		AGPA97	
YAMAHA	MT-09 850 STREET RALLY (RAD.CAL)	850	2014		AGPA97	
YAMAHA	TDM 850	850	1991	1995	AGPA145	
YAMAHA	TDM 850	850	1991	1995	AGPA197	
YAMAHA	TDM 850	850	1991	2001	AGPA200	AGPA54
YAMAHA	TRX 850	850	1995			AGPA54
YAMAHA	TRX 850	850	1996	1999	AGPA197	
YAMAHA	TRX 850 (ITALY)	850	1995		AGPA96	AGPA54
YAMAHA	TDM 900	900	2002		AGPA97	AGPP121
YAMAHA	XJ 900	900	1983	1985	AGPA54	AGPA54
YAMAHA	XJ 900 F	900	1985	1993	AGPA54	AGPA54
YAMAHA	XJ 900 S, DIVERSION	900	1994	2003	AGPA71	AGPA54
YAMAHA	XV 920 K, MK, VIRAGO	920	1983			AGPA176
YAMAHA	XV 920 VIRAGO	920	1981			AGPA54
YAMAHA	XV 950 BOLT	950	2014		AGPA71	AGPP121
YAMAHA	XV 950 BOLT C-SPEC	950	2015		AGPA71	AGPP121
YAMAHA	XV 950 BOLT R-SPEC	950	2014		AGPA71	AGPP121
YAMAHA	XVS 950 A MIDNIGHT STAR	950	2009		AGPA71	AGPP121
YAMAHA	FZ1 1000 FAZER	1000	2006		AGPA97	
YAMAHA	FZR 1000	1000	1994	1995	AGPA196	AGPA54
YAMAHA	FZR 1000 EX UP	1000	1990	1993		AGPA54
YAMAHA	FZR 1000 EX-UP	1000	1992	1993	AGPA147	
YAMAHA	FZR 1000 EXUP	1000	1989	1990	AGPA200	
YAMAHA	FZR 1000 EXUP	1000	1991	1992	AGPA199	
YAMAHA	FZR 1000 GENESIS	1000	1987	1989		AGPA54
YAMAHA	FZR 1000 GENESIS	1000	1987	1989	AGPA197	
YAMAHA	FZS 1000 FAZER	1000	2001	2005	AGPA97	AGPP228
YAMAHA	GTS 1000	1000	1993	1999		AGPA54
YAMAHA	XV 1000 L, C	1000	1984		AGPA54	AGPA54
YAMAHA	XV 1000 VIRAGO	1000	1986		AGPA54	
YAMAHA	YZF 1000 R THUNDER ACE	1000	1996		AGPA97	AGPA54
YAMAHA	YZF 1000 R1	1000	1998	2003	AGPA97	
YAMAHA	YZF 1000 R1 (Rad.cal)(4-pad)	1000	2007	2014	AGPA36	
YAMAHA	YZF 1000 R1 (RAD.CAL)	1000	2004	2006	AGPA97	
YAMAHA	YZF 1000 R1 (RAD.CAL)	1000	2015		AGPA97	AGPP39
YAMAHA	YZF 1000 R1 SP (RAD.CAL)	1000	2006		AGPA97	
YAMAHA	YZF 1000 R1M (RAD.CAL)	1000	2015		AGPA97	AGPP39
YAMAHA	BT 1100 BULLDOG	1100	2002		AGPA97	AGPA54
YAMAHA	FJ 1100	1100	1983	1985	AGPA54	AGPA54
YAMAHA	XV 1100 VIRAGO	1100	1986	1993	AGPA54	
YAMAHA	XV 1100 VIRAGO	1100	1994	1998	AGPA71	
YAMAHA	XV 1100 VIRAGO	1100	1999		AGPA22	AGPA54
YAMAHA	XVS 1100 A DRAG STAR CLASSIC	1100	2000		AGPA22	
YAMAHA	XVS 1100 DRAG STAR	1100	1999		AGPA22	AGPA54
YAMAHA	XVS 1100 DRAG STAR CLASSIC	1100	2000			AGPA54
YAMAHA	FJ 1200	1200	1986	1987	AGPA54	AGPA54

PASTIGLIE BRAKE PADS

INDICE ANALITICO PASTIGLIE / pads alphabetical index

MARCA Brand	MODELLO Model	CC	DA From	A To	ANT. Front	POST. Rear
YAMAHA	FJ 1200	1200	1988			AGPA54
YAMAHA	FJ 1200 (3CV/ CXW TYPE)	1200	1988	1995	AGPA197	
YAMAHA	FJ 1200 A ABS	1200	1991	1995	AGPA200	
YAMAHA	FJ 1200 ABS	1200	1991	1993		AGPA54
YAMAHA	V-MAX 1200	1200	1985	1992	AGPA54	AGPA54
YAMAHA	V-MAX 1200 SPL,E,EC,F, FC, G,GC,H,HC,J,JC	1200	1993	2003		AGPA54
YAMAHA	XJR 1200	1200	1994	1998		AGPA54
YAMAHA	XJR 1200 (ITALY)	1200	1995	1998	AGPA96	AGPA54
YAMAHA	XJR 1200 / SP	1200	1995	1998	AGPA197	
YAMAHA	XJR 1200 SP	1200	1997	1998		AGPA54
YAMAHA	XTZ 1200 SUPER TENERE	1200	2010		AGPA97	AGPP121
YAMAHA	XTZ 1200 ZE	1200	2014		AGPA97	AGPP121
YAMAHA	XV 1200 DL, DC2	1200	1984		AGPA54	AGPA54
YAMAHA	XV 1200 VENTURE ROYALE	1200	1985		AGPA54	AGPA54
YAMAHA	XV 1200 V-Max	1200	1993	2001	AGPA200	
YAMAHA	XV 1200 Z12T	1200	1984		AGPA54	AGPA54
YAMAHA	XVT 1200 T, VENT. ROYALE	1200	1984		AGPA54	AGPA54
YAMAHA	FJR 1300	1300	2001		AGPA97	AGPP121
YAMAHA	FJR 1300 A	1300	2013			AGPP121
YAMAHA	FJR 1300 A	1300	2013	2015	AGPA21	
YAMAHA	FJR 1300 A	1300	2016		AGPA21	
YAMAHA	FJR 1300 ABS	1300	2003	2005	AGPA97	
YAMAHA	FJR 1300 ABS	1300	2003	2012		AGPP121
YAMAHA	FJR 1300 ABS	1300	2006	2012	AGPA21	
YAMAHA	FJR 1300 AE	1300	2016		AGPA21	
YAMAHA	FJR 1300 AS	1300	2013			AGPP121
YAMAHA	FJR 1300 AS	1300	2013	2015	AGPA21	
YAMAHA	FJR 1300 AS	1300	2016		AGPA21	
YAMAHA	XJR 1300	1300	1999	2002	AGPA97	
YAMAHA	XJR 1300	1300	1999	2001		AGPA54
YAMAHA	XJR 1300 02	1300	2002			AGPP228
YAMAHA	XJR 1300 RACER	1300	2015		AGPA97	AGPP228
YAMAHA	XJR 1300 SP	1300	2001		AGPA97	AGPA54
YAMAHA	XVS 1300 A MIDNIGHT STAR	1300	2007		AGPA22	AGPP121
YAMAHA	XVS 1300 CUSTOM	1300	2014		AGPA22	AGPP121
YAMAHA	XVS 1300 STRYKER	1300	2011		AGPA71	AGPP121
YAMAHA	XVZ 1300 A ROYAL STAR	1300	1996			AGPA145
YAMAHA	XVZ 1300 A ROYAL STAR / TOUR CLASSIC	1300	1996	2001		AGPA197
YAMAHA	XVZ 1300 AT ROYAL STAR TOUR CLASSIC	1300	1997			AGPA145
YAMAHA	XVZ 1300 ROYAL STAR BOULEVARD	1300	1999			AGPA145
YAMAHA	XVZ 1300 TF ROYAL STAR VENTURE	1300	1999		AGPA71	AGPA145
YAMAHA	XVZ 1300 TF VENTURE STAR	1300	1999	2001		AGPA197
YAMAHA	XVZ 1300 VENTURE ROYALE	1300	1986	1995		AGPA197
YAMAHA	XVZ 1300 VENTURE ROYALE	1300	1986	1995		AGPA145
YAMAHA	XV 1600 A WILD STAR	1600	1999		AGPA71	AGPA145
YAMAHA	XV 1600 A WILD STAR	1600	1999	2004		AGPA197
YAMAHA	MT-01 1700 (Rad.cal)	1700	2007		AGPA36	
YAMAHA	VMX 1700 V-MAX	1700	2009		AGPA36	
YAMAHA	MT-01 1700 (RAD.CAL)	1700	2005	2006	AGPA97	
YAMAHA	VMX 1700 V-MAX	1700	2009			AGPP121
YAMAHA	XV 1700 PC ROAD STAR WARRIOR	1700	2003		AGPA97	AGPP121
YAMAHA	XV 1700 ROAD STAR WARRIOR	1700	2002		AGPA97	AGPA145
YAMAHA	XV 1900 A	1900	2011		AGPA21	
YAMAHA	XV 1900 MIDNIGHT STAR	1900	2006		AGPA97	AGPP121
YAMAHA	TDR 8		1989		AGPA89	AGPA89
ZANELLA						
ZANELLA	RACING MOPED 50	50	1992		AGPA31	
ZANELLA	RZA 125	125	1992		AGPA31	
ZERO						
ZERO	FX ZF2.8		2015		AGPA29	
ZERO	FX ZF5.7		2015		AGPA29	
ZERO	DS ZF11.4		2013	2014	AGPA51	
ZERO	DS ZF8.5		2013	2014	AGPA51	
ZERO	FX ZF2.8		2013	2014	AGPA51	
ZERO	FX ZF5.7		2013	2014	AGPA51	
ZERO	MX ZF2.8		2013		AGPA51	
ZERO	MX ZF5.7		2013		AGPA51	
ZERO	S ZF11.4		2013	2014	AGPA51	
ZERO	S ZF8.5		2013	2014	AGPA51	
ZERO	SR ZF11.4		2014		AGPA51	
ZERO	XU ZF2.8		2013		AGPA51	
ZERO	XU ZF5.7		2013		AGPA51	
ZERO	DS ZF6.0		2010	2012		AGPA82
ZERO	DS ZF9.0		2010	2012		AGPA82
ZERO	MX		2010	2012		AGPA82
ZERO	S ZF6.0		2010	2012		AGPA82
ZERO	X		2010	2012		AGPA82
ZERO	XU		2011	2012		AGPA82
ZERO	DS ZF12.5		2015		AGPA92	
ZERO	DS ZF9.4		2015		AGPA92	
ZERO	S ZF12.5		2015		AGPA92	
ZERO	S ZF9.4		2015		AGPA92	
ZERO	SR ZF12.5		2015		AGPA92	
ZERO	DS ZF11.4		2013			AGPP106
ZERO	DS ZF8.5		2013			AGPP106
ZERO	FX ZF2.8		2013			AGPP106
ZERO	FX ZF5.7		2013			AGPP106
ZERO	MX ZF2.8		2013			AGPP106
ZERO	MX ZF5.7		2013			AGPP106
ZERO	S ZF11.4		2013			AGPP106
ZERO	S ZF8.5 1		2013			AGPP106
ZERO	XU ZF2.8		2013			AGPP106
ZERO	XU ZF5.7		2013			AGPP106
ZUNDAPP						
ZUNDAPP	KS 80 SUPER	80	1980		AGPA151	
ZUNDAPP	KS 175	175	1978		AGPA141	

ACCOSSATO

PASTIGLIE BRAKE PADS

APPLICAZIONI PER CODICE PASTIGLIA / applications for pads code

MESCOLA ORGANICA E SINTERIZZATA organic and sintered compound
OR / ST

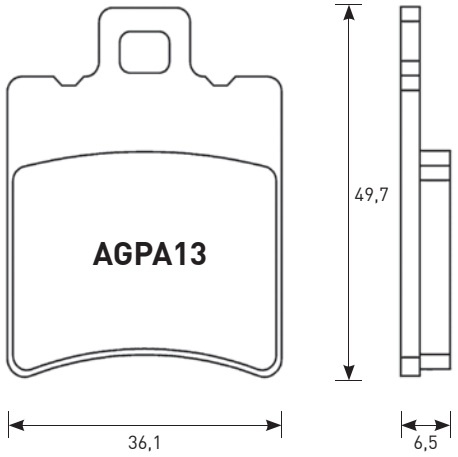

CROSS REFERENCE	
EBC	FA193
NEWFREN	.FD.0196
BREMBO	07BB1710
FERODO	FDB680
CL	3013
SBS	725/771

EQUIVALENT OE #	
OEM Aprilia	8113064
OEM Aprilia	8213245
OEM Aprilia	8113663
OEM Aprilia	8213318
OEM Aprilia	8113678
OEM Aprilia	8213197
OEM Aprilia	8213571
OEM Aprilia	8213192
OEM Aprilia	8113638
OEM Aprilia	8113644
OEM Benelli	R43420091A0
OEM Benelli	R44420041A0
OEM Beta 25	25370000
OEM Beta 25	25240000
OEM Gilera	647172
OEM Gilera	647171
OEM Gilera	498408
OEM Honda 0	6455 GBY 910
OEM Honda 0	6455 GBM 750
OEM Malaguti	11943900
OEM Malaguti	11950200
OEM Suzuki	59300 35810
OEM Suzuki	59300 09820
OEM Yamaha	5ME F5811 00
OEM Yamaha	5MF F5811 00
OEM Yamaha	5WW F5811 20
OEM Yamaha	5RW F5811 00
OEM Yamaha	4VV F5811 00

AGPA13						
MARCA Brand	MODELLO Model	CC	DA From	A To	ANT. Front	POST. Rear
APRILIA	AMICO 50 ALL MODELS	50	1992		X	
APRILIA	AREA 51	50	1998		X	X
APRILIA	GULLIVER / LIQUID	50	1995		X	
APRILIA	HABANA	50	2001		X	
APRILIA	MOJITO / MOJITO CUSTOM	50	2002		X	
APRILIA	RALLY 50	50	1995		X	
APRILIA	RALLY 50 LIQUID COOLED	50	1996		X	X
APRILIA	SCARABEO	50	1994	1999	X	
APRILIA	SCARABEO 50 DELUXE	50	1998		X	X

AGPA13						
MARCA Brand	MODELLO Model	CC	DA From	A To	ANT. Front	POST. Rear
APRILIA	SCARABEO 50 DITECH	50	2002		X	
APRILIA	SCARABEO 50 STREET	50	2000		X	
APRILIA	SONIC 50 SPICE	50	1997		X	
APRILIA	SONIC 50 GP	50	1997		X	
APRILIA	SR 50 STEALTH - RACING	50	1997		X	X
APRILIA	SR 50 WWW - NETSCAPER	50	1997		X	
APRILIA	SR 50 2000	50	2000		X	
APRILIA	SR 50 I E DITECH	50	2002		X	
APRILIA	SCARABEO 70	70	1994		X	
APRILIA	LEONARDO 125	125	1995	1998		X
APRILIA	LEONARDO 150	150	1997	1998		X
APRILIA	RS 250	249	1997			X
APRILIA	RS 250	249	1998			X
APRILIA	RS 250 PISTA	249	2004			X
ATALA	BYTE 50	50	1996		X	
ATALA	CAROSELLO 50	50	1997		X	
ATALA	HACKER 50	50	1995		X	
ATALA	HACKER 50	50	1996		X	
ATALA	SCHEGGIA 50	50	1998		X	
BENELLI	491 GT	50	1997		X	
BENELLI	491 SPORT - RACING	50	1997		X	
BENELLI	K2 50 ALL MODELS	50	1998		X	X
BENELLI	NAKED 50	50	1998		X	
BENELLI	PEPE 50	50	1999		X	
BENELLI	100 NAKED	100	2002		X	
BENELLI	K2 100 BIPOSTO	100	1999		X	
BENELLI	LX 100 PEPE	100	2002		X	
BENELLI	666 125	125	1998			X
BENELLI	ADIVA 125	125	2000		X	
BENELLI	VELVET 125	125	1999		X	X
BENELLI	VELVET 125 TOURING	125	2002	2003	X	X
BENELLI	ADIVA 150	150	2000		X	
BENELLI	VELVET 150	150	1999		X	
BENELLI	VELVET 150 TOURING	150	2002	2003	X	X
BENELLI	CAFFE' NERO 250 (PINZA DX)	250	1996			X
BETA	ARK 50 ALL MODELS	50	1996		X	X
BETA	CH 50	50	1994		X	
BETA	CHRONO 50 13	50	1994		X	
BETA	CRONO 50 502	50	1997		X	
BETA	QUADRA 50	50	1995		X	
BETA	TEMPO 50	50	1999		X	
BETA	TEMPO 50 16	50	2000		X	
BETA	TEMPO 50 13	50	2000		X	
BETA	EIKON 125	125	2004		X	
BETA	EIKON 150	150	2004		X	
DERBI	VAMOS 50 R	50	1995		X	
GARELLI	FLO' 50	50	2000		X	
GARELLI	PANTHER 125	125	2002			X
GARELLI	PANTHER 150	150	2003			X
GARELLI	PANTHER 250	250	2002			X
GENERIC	TOXIC 50	50	2007			X
GENERIC	TRIGGER 50 SM	50	2006			X
GENERIC	TRIGGER 50 SM COMPETITION	50	2008			X
GENERIC	TRIGGER 50 X	50	2006			X
GENERIC	TRIGGER 50 X COMPETITION	50	2008			X
GILERA	EASY MOVING 50	50	1995		X	
GILERA	ICE 50	50	2002		X	
GILERA	RUNNER 50	50	1997		X	

PASTIGLIE BRAKE PADS

APPLICAZIONI PER CODICE PASTIGLIA / applications for pads code

AGPA13						
MARCA Brand	**MODELLO** Model	**CC**	**DA** From	**A** To	**ANT.** Front	**POST.** Rear
GILERA	RUNNER 50 SP	50	1998		X	
GILERA	STALKER 50	50	1997		X	
GILERA	STORM 50	50	1994		X	
GILERA	TYPHOON 50	50	1993	1996	X	
GILERA	TYPHOON 50 CATALYZED	50	2002		X	X
GILERA	TYPHOON 80	80	1995		X	
GILERA	TYPHOON 125	125	1995		X	
GILERA	TYPHOON 125 XR KAT	125	2000		X	
GILERA	MAD MUD 175	175	2002			X
GILERA	DNA 180	180	2001			X
HERCULES	GIPSY 50	50	1993		X	
HONDA	SFX 50	50	1995		X	
HONDA	SH 50 FIFTY	50	1997		X	
HONDA	SKY 50	50	1997		X	
HONDA	SKY 50 VETRO	50	2000		X	
HONDA	SXR 50	50	1997		X	
HONDA	X8R 50 X	50	1998		X	
HONDA	X8R 50 S	50	1998		X	
HONDA	SH 100	100	1997		X	
HYOSUNG	BOOMER 125	125	2003		X	
HYOSUNG	EXCEED 125	125	2002		X	
HYOSUNG	GRAND PRIX 125	125	1998		X	
HYOSUNG	HYPER 125	125	1999		X	
HYOSUNG	EXCEED 150	150	2002		X	
HYOSUNG	GRAND PRIX 150	150	1998		X	
HYOSUNG	COMET 250	250	2002		X	
ITALJET	FORMULA 50	50	1994	1996		X
ITALJET	FORMULA 80	80	1994			X
ITALJET	FORMULA 125	125	1994	1996		X
KEEWAY	125 ARN	125	2006		X	
KEEWAY	150 ARN	150	2006		X	
MACAL	FLASH 50	50	1999		X	
MALAGUTI	CIAK 50 TWIN DISK	50	2002		X	X
MALAGUTI	CIAK 50	50	1999		X	
MALAGUTI	CIAK 50 TD	50	2000	2001	X	X
MALAGUTI	CIAK 50 MONO EURO2 3	50	2003		X	
MALAGUTI	CIAK 50 MASTER	50	2004	2005	X	
MALAGUTI	CIAK 50 MASTER 4T	50	2005		X	
MALAGUTI	CIAK 50 MASTER EURO 2	50	2006		X	
MALAGUTI	CR1 50 CROSSER	50	1997		X	
MALAGUTI	F 10 50	50	1994		X	
MALAGUTI	F 10 50 WAP	50	2002		X	
MALAGUTI	F 10 50 TIMERMACHINE	50	2002		X	
MALAGUTI	F 12 50 PHANTOM TWIN DISK	50	1998			X
MALAGUTI	F 12 50 PHANTOM DIGIT	50	2002		X	X
MALAGUTI	F 12 50 RACING LIFE	50	2003		X	X
MALAGUTI	F 12 50 TYRE TRACK	50	2003		X	X
MALAGUTI	F 12 50 MECHATRONIC	50	2003		X	X
MALAGUTI	F 12 R 50 PHANTOM AC	50	2007	2008	X	

AGPA13						
MARCA Brand	**MODELLO** Model	**CC**	**DA** From	**A** To	**ANT.** Front	**POST.** Rear
MALAGUTI	F 15 50 FIREFOX TWIN DISK	50	1998			X
MALAGUTI	YESTERDAY 50	50	1998		X	
MALAGUTI	CIAK 100	100	1999	2001	X	X
MALAGUTI	F 12 100 PHANTOM	100	1999		X	X
MBK	CS 50 MACH G	50	2002		X	
MBK	DODO 50	50	2000		X	
MBK	FLIPPER 50	50	1998		X	
MBK	ROCKET 50	50	1996		X	
MBK	STUN'T 50	50	2000		X	
MOTRAN	SPIKE 50	50	1998		X	
MOTRAN	SYNCRO 50	50	1998		X	
MOTRAN	THUNDER 50	50	1995		X	
PEUGEOT	BUXI 50	50	1994		X	
PEUGEOT	SPEEDAKE 50	50	1995		X	
PIAGGIO	NRG 50	50	1994	1996	X	
PIAGGIO	NRG 50 MC2	50	1996		X	
PIAGGIO	NRG 50 MC2 DD	50	1998		X	
PIAGGIO	NRG 50 MC3	50	2005		X	
PIAGGIO	NRG 50 PUREJET	50	2002	2004	X	
PIAGGIO	NRG 50 POWER DD	50	2004	2005	X	
PIAGGIO	NTT 50	50	1995	1996	X	
PIAGGIO	ZIP 50 FAST RIDER	50	1993	1995	X	
PIAGGIO	HEXAGON 125	125	1994		X	
PIAGGIO	HEXAGON 150	150	1994	1999	X	
RIZZATO	ATALA HACKER 50	50	1995		X	
SIAM	FALCON 50	50	1997		X	
SIAM	SCROSS 50	50	1997		X	
SUZUKI	AY 50 KATANA (PINZA BREMBO)	50	1997		X	
TOMOS	REVIVAL 50	50	2002		X	
TOMOS	STREETMATE 50	50	2003		X	
YAMAHA	YM 50 BREEZE	50	1994		X	
YAMAHA	50 BW'S R	50	1995		X	
YAMAHA	50 ZUMA	50	1996		X	
YAMAHA	BW 50 SPY	50	1995	1999	X	
YAMAHA	BW 50 NEXT GENERATION	50	1996		X	
YAMAHA	BW 50 BUMP	50	1997		X	
YAMAHA	BW 50 SPY 00	50	2000		X	
YAMAHA	BW 50 SPORTS SPEC R	50	2002		X	
YAMAHA	EW 50 SLIDER	50	2000		X	
YAMAHA	WHY 50	50	1997		X	
YAMAHA	VP 125 X CITY	125	2008		X	
YAMAHA	XN 125 TEOS	125	2000	2001	X	
YAMAHA	150 TEOS	150	2001	2002	X	
YAMAHA	EW 50 SLIDER		2000		X	
YAMAHA	WHY 50		1997		X	
YAMAHA	VP 125 X CITY		2008		X	
YAMAHA	XN 125 TEOS		2000	2001	X	
YAMAHA	150 TEOS		2001	2002	X	

ACCOSSATO

PASTIGLIE BRAKE PADS

APPLICAZIONI PER CODICE PASTIGLIA / applications for pads code

MESCOLA ORGANICA organic compound
OR

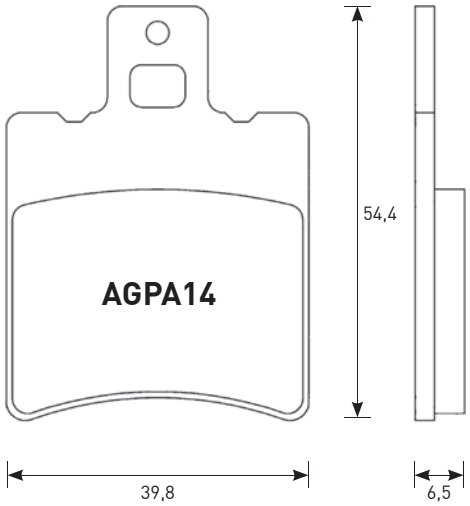

CROSS REFERENCE	
EBC	FA206
NEWFREN	.FD.0197
BREMBO	07YA2905
FERODO	FDB889
CL	2307
SBS	114/667

EQUIVALENT OE #	
OEM Yamaha	5WW F5811 20

AGPA14						
MARCA Brand	MODELLO Model	CC	DA From	A To	ANT. Front	POST. Rear
APRILIA	LX 50 AMICO, SPORT	50	1992		X	
APRILIA	SR 50 EUROPA	50	1993		X	
APRILIA	SR 50 URBAN KID	50	1993		X	
APRILIA	SR 50 VIPER	50	1993		X	
ATALA	AT10	50	1997		X	
ATALA	SKEGGIA 50	50	1998		X	
ATALA	AT10	50	1997		X	
MBK	BOOSTER 50 NEXT GENERATION	50	1997		X	
MBK	BOOSTER 50 ROCKET	50	1995		X	
MBK	BOOSTER 50 TRACK	50	1997		X	
MBK	EQUALIS 50	50	1996		X	
MBK	EVOLIS 50	50	1992		X	
MBK	FIZZ 50	50	1993		X	
MBK	FORTE 50	50	1994		X	
MBK	NITRO 50	50	1997	2001	X	
MBK	OVETTO 50	50	1997		X	
MBK	EVOLIS 80	80	1994		X	
PGO	RODOSHOW 50	50	2001		X	
PGO	RODOSHOW 90	90	2002		X	
PIAGGIO	50 ZIP & ZIP	50	1994		X	
SHE-LUNG	50 RACER	50	1996		X	
SUZUKI	AP 50	50	1995		X	
SUZUKI	AY 50, KATANA	50	1996		X	
YAMAHA	JOG-Z 50 (ITALIA)	50	1990		X	
YAMAHA	YE 50 ZEST	50	1992	1995	X	
YAMAHA	YH 50	50	1998		X	
YAMAHA	YM 50 BREEZE , FIZZ	50	1995		X	
YAMAHA	YQ 50 AEROX	50	1997	2001	X	
YAMAHA	YE 80 ZEST(ITALIA)	80	1993		X	

MESCOLA ORGANICA organic compound
OR

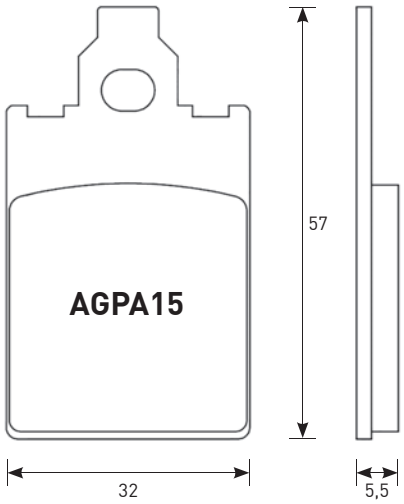

CROSS REFERENCE	
EBC	FA116
OGNIBENE	151
BRAKING	694
NEWFREN	.FD.0098
BREMBO	7009
FERODO	FDB697
CL	2260/3004
SBS	106/109/607

EQUIVALENT OE #	
OEM Yamaha	5BK F5811 00

AGPA15						
MARCA Brand	MODELLO Model	CC	DA From	A To	ANT. Front	POST. Rear
ACCOSSATO	50 ENDURO CODICE	50	1989			X
ACCOSSATO	CE 50	50	1987			X
ACCOSSATO	KR 80	80	1987			X
APRILIA	AF1 50 AE	50	1986		X	
APRILIA	AF1 50 FUTURA	50	1990		X	
APRILIA	AF1 50 EUROPA	50	1990		X	
APRILIA	RED ROSE 50	50	1990		X	
BENELLI	CHRONO 50	50	1992	1993	X	
KTM	GO 50 SCOOTER	50	1994		X	
MALAGUTI	CENTRO 50	50	1993		X	
MALAGUTI	F-12 50 PHANTOM L.C.	50	1994	1998	X	
MALAGUTI	F-15 50 FIREFOX L.C.	50	1996		X	
YAMAHA	DT 50 R	50	1998	2003	X	

PASTIGLIE BRAKE PADS

APPLICAZIONI PER CODICE PASTIGLIA / applications for pads code

MESCOLA ORGANICA organic compound
OR

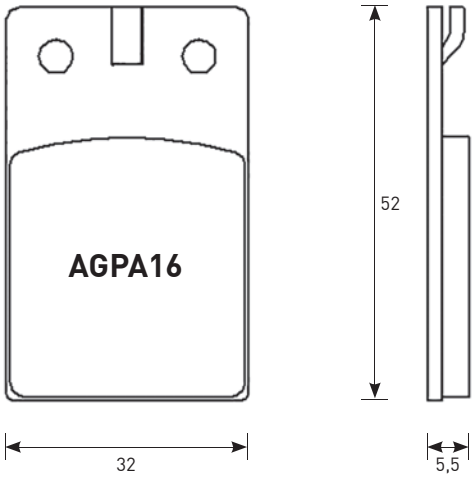

CROSS REFERENCE	
EBC	**FA099**
OGNIBENE	**150**
BRAKING	**671**
NEWFREN	**.FD.0074**
BREMBO	**7008**
FERODO	**FDB436**
CL	**3034**
SBS	**595**

EQUIVALENT OE #	
OEM Malaguti	**11933400**

AGPA16						
MARCA Brand	**MODELLO** Model	**CC**	**DA** From	**A** To	**ANT.** Front	**POST.** Rear
BENELLI	**DEVIL 50**	**50**	**1992**			**X**
BENELLI	**SPRING 50**	**50**	**1992**			**X**
BENELLI	**DEVIL 80**	**80**	**1992**			**X**
BETA	**ALP 50**	**50**	**1991**		**X**	
BETA	**AE FOUR TWIN 50**	**50**	**1988**		**X**	
BETA	**RV 50**	**50**	**1988**		**X**	
BETA	**VRS 50**	**50**	**1986**		**X**	
BETA	**TR 32**	**125**	**1986**	**1987**	**X**	

AGPA16						
MARCA Brand	**MODELLO** Model	**CC**	**DA** From	**A** To	**ANT.** Front	**POST.** Rear
BETA	**TR 33**	**125**	**1986**	**1987**	**X**	
BETA	**TR 34**	**125**	**1988**		**X**	
BETA	**TR 33**	**240**	**1986**	**1988**	**X**	
BETA	**TR 34**	**260**	**1986**	**1988**	**X**	
BETA	**SYNT**	**260**	**1992**		**X**	
BETA	**TR 35**	**260**	**1989**	**1991**	**X**	
FANTIC	**TRIAL 50**	**50**			**X**	
FANTIC	**TRIAL 125**	**125**			**X**	
FANTIC	**TRIAL PROFESSIONAL 125**	**125**	**1987**		**X**	**X**
FANTIC	**TRIAL 200 PROGRESS 1**	**200**	**1987**		**X**	
FANTIC	**HP1 125 STRADA**	**125**	**1985**		**X**	
FANTIC	**TRIAL 201**	**201**			**X**	
FANTIC	**TRIAL 201 PROGRESS 2**	**201**	**1987**		**X**	
FANTIC	**TRIAL 241 PROGRESS 2**	**241**	**1987**		**X**	
FANTIC	**TRIAL 243**	**243**	**1987**		**X**	**X**
FANTIC	**TRIAL 301**	**301**	**1985**		**X**	
FANTIC	**TRIAL 301 PROGRESS 2**	**301**	**1987**		**X**	
FANTIC	**TRIAL 303 PROFESSIONAL**	**303**	**1987**		**X**	**X**
FANTIC	**TRIAL 343 PROGRESS 2**	**343**	**1987**		**X**	**X**
GARELLI	**323 TRIAL**	**323**	**1986**		**X**	
GILERA	**BULLIT 50**	**50**	**1990**		**X**	
JCM	**TRIAL**		**1987**		**X**	
JCM	**OXYGENE 125**	**125**	**1989**		**X**	
JCM	**WEEK END 125**	**125**	**1989**		**X**	
JCM	**VEGA 233**	**233**	**1988**		**X**	
JCM	**ENDURO 240**	**240**	**1991**		**X**	
JCM	**OXYGENE 240**	**240**	**1989**		**X**	
JCM	**WEEK END 240**	**240**	**1989**		**X**	
JCM	**WEEK END 250**	**250**	**1991**		**X**	
JCM	**OXYGENE 325**	**325**	**1989**		**X**	
JCM	**WEEK END 325**	**325**	**1989**		**X**	
JCM	**VEGA 333**	**333**	**1987**		**X**	
JCM	**VEGA 333**	**333**	**1988**		**X**	
MALAGUTI	**50 FIFTY FULL, CX, TOP**	**50**	**1985**		**X**	
MALAGUTI	**FIFTY MISTRAL**	**50**	**1990**		**X**	
MALAGUTI	**CH 50**	**50**	**1986**		**X**	
MALAGUTI	**MGX 450 RONCO**	**450**	**1987**		**X**	
MONTESA	**H7 360 ENDURO**	**360**	**1986**		**X**	
RIEJU	**DRAG 50**	**50**	**1992**		**X**	
RIEJU	**RS1 50**	**50**	**1992**		**X**	
TOMOS	**BT 50 S**	**50**	**1989**		**X**	
TOMOS	**N 50 AT, BT**	**50**	**1991**		**X**	
TOMOS	**CTX 80**	**80**	**1989**		**X**	

ACCOSSATO

PASTIGLIE BRAKE PADS

APPLICAZIONI PER CODICE PASTIGLIA / applications for pads code

MESCOLA ORGANICA E SINTERIZZATA organic and sintered compound
OR / ST

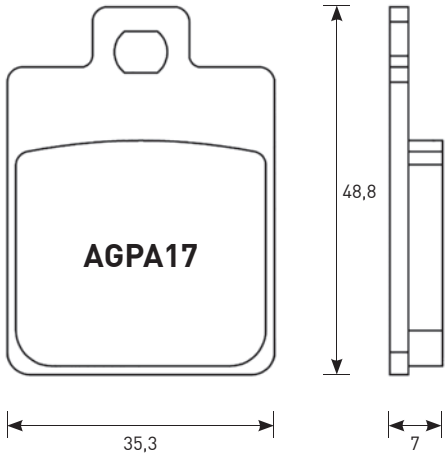

CROSS REFERENCE	
EBC	SFA260
OGNIBENE	156
BRAKING	808
NEWFREN	.FD.0247
BREMBO	7019
FERODO	FDB2056/7
CL	3043
SBS	142/202/724

EQUIVALENT OE #	
OEM Piaggio	I494096

AGPA17						
MARCA Brand	MODELLO Model	CC	DA From	A To	ANT. Front	POST. Rear
GILERA	RUNNER 50 PJ	50	2006			X
GILERA	RUNNER 50 SP	50	2006			X
GILERA	RUNNER 50 SP, PURE JET ST	50	1998	2005		X
GILERA	STALKER 50	50	1997			X
GILERA	DT 50 STALKER	50	2001			X
GILERA	FX 125 RUNNER (Grimeca cal.)	125	2000			X
GILERA	FX 125 RUNNER (Hengtong cal.)	125	2000			X
GILERA	FX 125 RUNNER SP (Grimeca cal.)	125	2000			X
GILERA	FX 125 RUNNER SP (Hengtong cal.)	125	2000			X

AGPA17						
MARCA Brand	MODELLO Model	CC	DA From	A To	ANT. Front	POST. Rear
GILERA	ST 125 RUNNER	125	2012			X
GILERA	FXR 180 RUNNER (Grimeca cal.)	180	2000			X
GILERA	FXR 180 RUNNER (Hengtong cal.)	180	2000			X
GILERA	FXR 180 RUNNER SP (Grimeca cal.)	180	2000			X
GILERA	FXR 180 RUNNER SP (Hengtong cal.)	180	2000			X
GILERA	200 STALKER	200	1997			X
GILERA	FX 200 RUNNER SP	200	1998			X
GILERA	RC 500 FUOCO IE	500	2008		X	
PEUGEOT	50 TWEET RS	50	2010	2012		X
PEUGEOT	125 TWEET RS	125	2010	2012		X
PEUGEOT	150 TWEET RS	150	2010	2012		X
PIAGGIO	LIBERTY 50	50	1997		X	
PIAGGIO	LIBERTY 50 4T	50	2000		X	
PIAGGIO	ZIP DISCO 50	50	1996		X	
PIAGGIO	ZIP FAST RIDER 50	50	1996		X	
PIAGGIO	ZIP RST 50	50	1998	1999	X	
PIAGGIO	ZIP SPORT PRODUCTION 50	50	1996		X	
PIAGGIO	50 ET2	50	1997	2002	X	
PIAGGIO	50 ET4	50	2000		X	
PIAGGIO	50 LX 2T/4T	50	2005		X	
PIAGGIO	50 S 2T	50	2007		X	
PIAGGIO	50 S 4T	50	2009		X	
PIAGGIO	125 MP3	125	2006	2008	X	
PIAGGIO	125 SFERA	125	1995		X	
PIAGGIO	125 ZIP II 4T	125	2000		X	
PIAGGIO	125 ET4	125	1996	2000	X	
PIAGGIO	LIBERTY 150 LE	150	1999	2002	X	
PIAGGIO	LX 125 4T	125	2005		X	
PIAGGIO	PX 125	125	2002		X	
PIAGGIO	S 125 4T	125	2007		X	
PIAGGIO	150 LIBERTY	150	1999		X	
PIAGGIO	150 ET4	150	2002		X	
PIAGGIO	PX 150	150	2002		X	
PIAGGIO	200 LIBERTY	200	2006		X	
PIAGGIO	PX 200	200	2002		X	
PIAGGIO	250 LX 60	250	2006		X	
PIAGGIO	MP3 250	250	2006	2007	X	
PIAGGIO	MP3 250	250	2008		X	
PIAGGIO	MP3 300	300	2010		X	
PIAGGIO	MP3 300 YOURBAN IE	300	2015		X	
PIAGGIO	MP3 400 IE	400	2007		X	
PIAGGIO	MP3 400 LT	400	2009		X	
PIAGGIO	MP3 500	500	2010		X	

PASTIGLIE BRAKE PADS

APPLICAZIONI PER CODICE PASTIGLIA / applications for pads code

MESCOLA ORGANICA E SINTERIZZATA organic and sintered compound
OR / ST

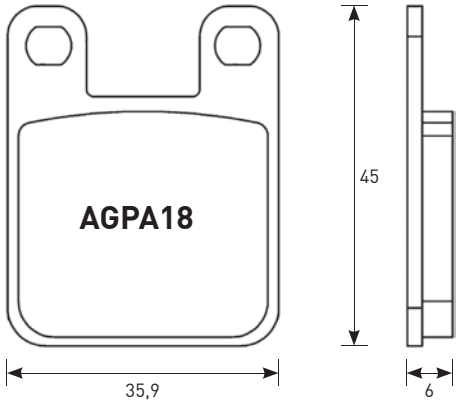

CROSS REFERENCE	
EBC	**FA115**
OGNIBENE	**288**
BRAKING	**621**
NEWFREN	**.FD.0142**
BREMBO	**07BB12**
FERODO	**FRP405**
CL	**2377/3015**
SBS	**559**

EQUIVALENT OE #			
3380925	**752816**	**812732**	**P150442**
3380928	**753092**	**2525241000**	**2525350000**
3499074	**753200**	**2525350000**	**2525241000**
9113181	**757215**	**00G04700141**	**5,93E+06**
5100154282	**5,93E+06**	**00H01301931**	**KA3497506**
4AJW004500	**45105NN2900**	**00D01210221**	**K00996315**
737786	**0DN00G4700141**	**213307100003**	**5WXW004510**
R051	**46013016000**	**9300060**	**9307001**
EJ29099074	**11955600**	**21330710000019**	**K00996315**
00H01303551	**R051**	**11966900**	**61340051A**
R235000	**GA121001T**		

AGPA18

MARCA Brand	**MODELLO** Model	**CC**	**DA** From	**A** To	**ANT.** Front	**POST.** Rear
ALFER	**MC 80**	**80**	**1987**			**X**
AJP	**MX 200**	**200**	**2009**			**X**
APRILIA	**RS-4 125**	**125**	**2011**			**X**
APRILIA	**TX 240**	**240**	**1986**		**X**	
APRILIA	**280 R , CLIMBER**	**280**	**1992**		**X**	**X**
APRILIA	**TX 311 M**	**311**	**1986**		**X**	
APRILIA	**TX 312 M**	**312**	**1988**		**X**	**X**
APRILIA	**TXR 312 M**	**312**	**1988**		**X**	**X**
ATK	**560**	**560**	**1987**	**1988**		
BENELLI	**BXK 125**	**125**	**1988**			
BETA	**SR 34**		**1989**		**X**	
BETA	**REV 50**	**50**	**2000**		**X**	**X**
BETA	**SUPER TRIAL 50**	**50**	**1992**		**X**	
BETA	**ST 50**	**50**	**1997**		**X**	**X**
BETA	**EVO JUNIOR 80**	**80**	**2010**		**X**	**X**
BETA	**REV 80**	**80**	**2000**	**2007**	**X**	**X**
BETA	**ALP 125**	**125**	**1999**		**X**	**X**
BETA	**ALP 125 4-STROKE**	**125**	**2000**	**2005**	**X**	**X**
BETA	**TR 125 34,35**	**125**	**1989**	**1990**	**X**	**X**
BETA	**TRIAL 125**	**125**	**1997**		**X**	
BETA	**ALP 200 4-stroke**	**200**	**2000**	**2005**	**X**	**X**
BETA	**SUPER TRIAL 240**	**240**	**1992**		**X**	

AGPA18

MARCA Brand	**MODELLO** Model	**CC**	**DA** From	**A** To	**ANT.** Front	**POST.** Rear
BETA	**ALP 240**	**240**	**1992**		**X**	
BETA	**ALP 240**	**240**	**1996**		**X**	
BETA	**250 TECHNO**	**250**	**1996**		**X**	**X**
BETA	**250 TECHNO**	**250**	**1999**		**X**	**X**
BETA	**ZERO 250**	**250**	**1991**		**X**	
BETA	**ALP 250**	**250**	**1992**		**X**	
BETA	**ALP 250**	**250**	**1997**		**X**	**X**
BETA	**ZERO 260**	**260**	**1991**		**X**	
BETA	**ALP 260**	**260**	**1996**		**X**	
BETA	**260 34, 35, ZERO**	**260**	**1989**	**1992**	**X**	
BLATA	**ENDURO 125**	**125**	**2007**			**X**
BLATA	**MOTARD 125**	**125**	**2007**			**X**
CPI	**SUPERMOTO 125**	**125**	**2007**		**X**	
DERBI	**FD YUMBO**		**1984**		**X**	
DERBI	**FD YUMBO EXTRA**		**1987**		**X**	
DERBI	**FDS**		**1987**		**X**	
DERBI	**FDT**		**1987**		**X**	
DERBI	**FDT COPPA**		**1985**		**X**	
DERBI	**DS 50**	**50**	**1988**		**X**	
DERBI	**FDX 50**	**50**	**1989**		**X**	
DERBI	**GP1 50**	**50**	**2005**			**X**
DERBI	**GPR 50 NUDE**	**50**	**2004**			**X**
DERBI	**GPR 50 RACING**	**50**	**2004**			**X**
DERBI	**GPR 75**	**75**	**1989**			**X**
DERBI	**SPORT 75, COPPA 75**	**75**	**1984**		**X**	
DERBI	**GPR 75 SPORT**	**75**				**X**
DERBI	**GPR 80 CUP**	**80**	**2004**			**X**
DERBI	**125 SENDA R 4T**	**125**	**2004**			**X**
DERBI	**125 SENDA X-TREME SM 4T**	**125**	**2004**			**X**
DERBI	**TERRA 125**	**125**	**2007**		**X**	
DERBI	**GP1 125**	**125**	**2005**			**X**
DERBI	**GPR 125**	**125**	**2005**			**X**
DERBI	**GPR 125 NUDE**	**125**	**2005**			**X**
DERBI	**GPR 125 RACING**	**125**	**2009**			**X**
FACTORY	**R12 50 PHANTOM AGUA**	**50**	**2006**			**X**
FACTORY	**R14 50 PHANTOM AGUA**	**50**	**2004**			**X**
FACTORY	**R14 50 PHANTOM AIRE**	**50**	**2003**		**X**	
FACTORY	**R2 PHANTOM 65**	**65**	**2004**			**X**
FACTORY	**YR 125**	**125**	**2006**			**X**
FANTIC	**250 K-ROO**	**250**	**1993**		**X**	**X**
FANTIC	**305**	**250**	**1989**		**X**	**X**
FANTIC	**307 TRIAL**	**250**	**1991**		**X**	**X**
GAC	**NEW T.T.**	**50**	**1987**		**X**	
GARELLI	**CICLONE LC, SM**	**50**	**1986**		**X**	
GARELLI	**50 SAHEL**	**50**	**1991**			**X**
GARELLI	**SAHEL 50**	**50**	**1991**			**X**
GASGAS	**TXT 50 BOY**	**50**	**2004**		**X**	**X**
GASGAS	**DELTA 125**	**125**	**1991**		**X**	
GASGAS	**PAMPERA 125**	**125**	**1996**		**X**	**X**
GASGAS	**TRIAL 125**	**125**	**1991**		**X**	
GASGAS	**PAMPERA 200**	**200**	**1999**		**X**	**X**
GASGAS	**TX 200**	**200**	**1997**		**X**	**X**
GASGAS	**PAMPERA 250**	**250**	**1996**	**1999**	**X**	**X**
GASGAS	**TRIAL 250**	**250**	**1989**		**X**	**X**
GASGAS	**GT 250 CONTACT**	**250**			**X**	**X**
GASGAS	**TX 270**	**270**	**1997**		**X**	**X**
GASGAS	**TX 320**	**320**	**1997**		**X**	**X**
GASGAS	**325 HALLEY PXC**	**325**			**X**	**X**
GASGAS	**TRIAL 327**	**327**			**X**	**X**
GASGAS	**GT 327 CONTACT**	**327**			**X**	**X**
GASGAS	**370 PAMPERA**	**370**	**1996**		**X**	**X**

ACCOSSATO

PASTIGLIE BRAKE PADS

APPLICAZIONI PER CODICE PASTIGLIA / applications for pads code

AGPA18						
MARCA Brand	MODELLO Model	CC	DA From	A To	ANT. Front	POST. Rear
GASGAS	370 PAMPERA	370	1998		X	X
GILERA	SURFER 125	125	2000		X	X
GMA	4 PISTON FRONT MODEL F					
HRD	SUPERMOTARD 125	125	2000	2002		X
HRD	TRAIL 125	125	2000	2002		X
HUSQVARNA	HUSKY BOY J,R, S 50	50	2001		X	
J. J. COBAS	TR1	250	1985			X
J. J. COBAS	TRIAL		1985		X	
JAYBRAKE	2 PISTON CALIPER, SMALL					
JCM	EUROPA 125	125	1989		X	X
JCM	SR 125	125	1989		X	X
JCM	EUROPA 240	240	1989		X	X
JCM	SR 240	240	1989		X	X
JCM	EUROPA 325	325	1989		X	
JCM	SR 325	325	1989		X	X
KTM	SX 60	60	1999		X	
KTM	SX 65	65	2000	2001	X	
MACBOR	XC 50 510 RACING	50	2004			X
MACBOR	XC 50 512 R6V	50	2004			X
MACBOR	XC 50 512 RACING	50	2004			X
MALAGUTI	FIFTY EVOLUTION	50	1991		X	
MALAGUTI	NKD 50 DRAGON	50	2006			X
MONTESA	COTA 125	125	1988		X	X
MONTESA	EVASION 260	260	1992		X	
MONTESA	COTA 304	240	1988		X	X
MONTESA	COTA 307	240	1989		X	X
MONTESA	COTA TRIAL 307	240	1988		X	X
MONTESA	COTA 309	240	1989		X	
MONTESA	COTA 310	250	1989		X	
MONTESA	COTA TRIAL 311	260	1992		X	
MONTESA	COTA 315 R	249	1997		X	X
MONTESA	COTA 335	330	1987	1991	X	X
MONTESA	M7 360 ENDURO	360	1985		X	
MORBIDELLI	125 cc	125			X	X
MOTORHISPANIA	RYZ 125 ARENA ENDURO	125	2005		X	X
PERFORMANCE MACHINE	125 X 2	125				
	125 X 4S	125				
	125 X 4SL	125				
PEUGEOT	XPS 125 CT	125	2006		X	X
PUCH	CONDOR	50	1990		X	
PUCH	TZX 50	50	1992		X	
PUCH	COBRA 75	75	1985		X	

AGPA18						
MARCA Brand	MODELLO Model	CC	DA From	A To	ANT. Front	POST. Rear
RIEJU	DRAC 50	50	1997		X	X
RIEJU	FD4 50 SUPER MARATON	50	1985		X	
RIEJU	TANGOO 50	50	2010			X
RIEJU	RR 50 SUPERMOTARD	50	1996		X	X
RIEJU	RS1 50	50	1992			X
RIEJU	RV 50	50			X	
RIEJU	K6 75, LC STRADA	75	1987		X	
RIEJU	P6 75, LC STRADA	75	1987		X	
RIEJU	MR 80 C, E	80	1988		X	
RIEJU	MR 80 CROSS	80	1987		X	
RIEJU	MR 80 ENDURO	80	1987		X	
RIEJU	RST 80	80	1991		X	X
RIEJU	TANGO 125	125	2006			X
RIEJU	TANGO 125	125	2008			X
RIEJU	TANGO PRO 125	125	2008			X
RIEJU	MRX 125	125	2003			X
RIEJU	MRX 125	125	2003		X	X
RIEJU	RR 125	125	1997		X	X
RIEJU	RS3 125	125	2010			X
RIEJU	SMX 125	125	2003			X
RIEJU	SMX 125	125	2003		X	X
RIEJU	TANGO 250	250	2008			X
SCORPA	TY-S F TRIAL 115	115	2006		X	
SCORPA	TY-S F TRIAL 125	125	2006		X	
SHERCO	125	125	2002			X
SHERCO	80 0,8	80	2001		X	X
SHERCO	CITY CORP 125 4T SM	125	2003			X
SHERCO	CITY CORP 125 4T ENDURO	125	2003			X
SHERCO	ST 125 1.25	125	2001	2005	X	X
SHERCO	ST 200 2.0	200	2001		X	X
SHERCO	ST 250	250	1999	2000	X	X
SIMSON	SM 125	125	2001			X
SJP	2 Piston Caliper (30-375)					
SJP	4 Piston Caliper (30-370)					
SUZUKI	DR 50 BIG	50	1989		X	
TOMOS	MC 125 T	125	2006			X
TOMOS	SE 125	125	2005			X
TOMOS	SM F 125 (Rad. Cal.)	125	2006			X
YAMAHA	XT 125 R	125	2005			X
YAMAHA	XT 125 X SUPERMOTARD	125	2005			X
YAMAHA	TY 250 R	250	1991	1992	X	
YAMAHA	TY 250 Z	250	1993	1996	X	X

MESCOLA ORGANICA organic compound
OR

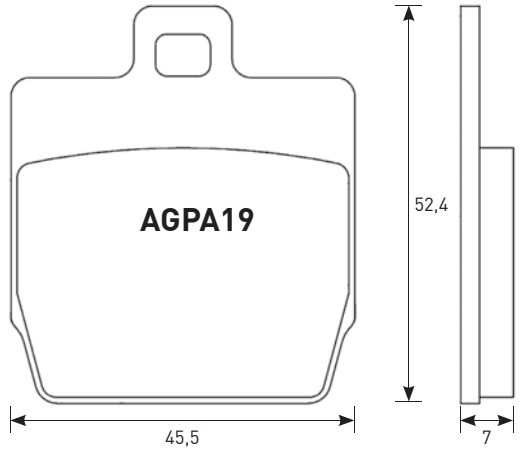

CROSS REFERENCE	
EBC	SFA268
OGNIBENE	174
BRAKING	814
NEWFREN	.FD.0251
BREMBO	07BB08
FERODO	FDB2062
CL	3027
SBS	731/145

EQUIVALENT OE #	
OEM Yamaha	5BR F5811 00

AGPA19						
MARCA Brand	MODELLO Model	CC	DA From	A To	ANT. Front	POST. Rear
CPI	50 GTS	50	2002			X
MBK	NITRO 50	50	1997	2001		X
MBK	STUNT 50	50	2000		X	
YAMAHA	50 SLIDER	50	2000		X	
YAMAHA	YQ 50 AEROX	50	1997	2001		X

PASTIGLIE BRAKE PADS

APPLICAZIONI PER CODICE PASTIGLIA / applications for pads code

MESCOLA ORGANICA, SINTERIZZATA, EV1 organic, sintered, ev1 compounds
OR / ST/ EV1

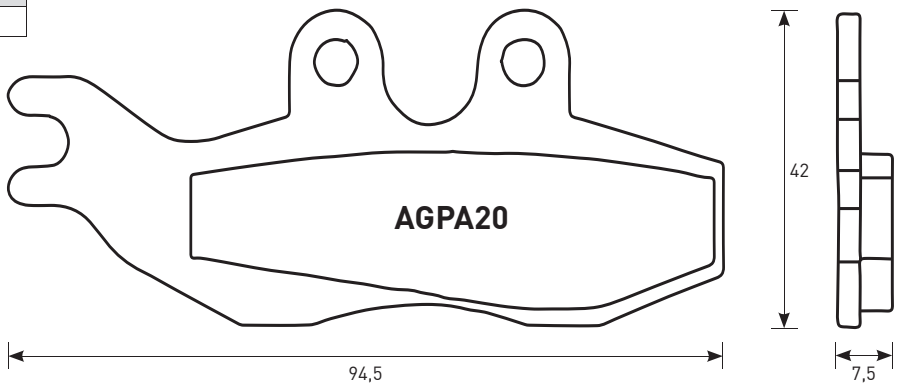

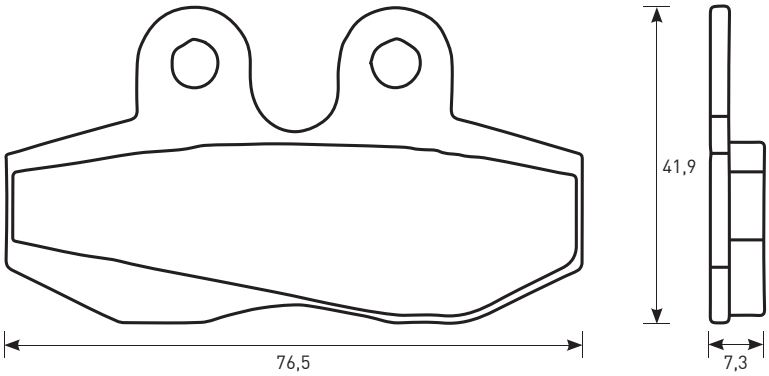

CROSS REFERENCE	
EBC	**FA194**
OGNIBENE	**166**
BRAKING	**770**
NEWFREN	**.FD.0195**
BREMBO	**7012**
FERODO	**FDB677**
CL	**1146/3031**
SBS	**120/168/177/689**

EQUIVALENT OE #	
OEM Derbi	**00H04703141**
OEM Piaggio	**494628**

AGPA20

MARCA Brand	**MODELLO** Model	**CC**	**DA** From	**A** To	**ANT.** Front	**POST.** Rear
APRILIA	**MX 50**	**50**	**2003**		**X**	
APRILIA	**RS 50 REPLICA**	**50**	**2000**	**2005**	**X**	
APRILIA	**RX 50**	**50**	**1990**		**X**	
APRILIA	**RX 50 RACING**	**50**	**2004**	**2006**	**X**	
APRILIA	**50 SPORT CITY ONE**	**50**	**2008**		**X**	
APRILIA	**TUONO 50**	**50**	**2004**		**X**	
APRILIA	**ETX 125**	**125**	**1999**		**X**	
APRILIA	**PEGASO 125**	**125**	**1992**		**X**	
APRILIA	**RX 125**	**125**	**1992**		**X**	
APRILIA	**SR 125 MAX**	**125**	**2012**		**X**	**X**
APRILIA	**SR 125 SPORT CITY ONE**	**125**	**2012**		**X**	
APRILIA	**SR 300 MAX**	**300**	**2012**		**X**	**X**
APRILIA	**SRV 850**	**850**	**2012**			**X**
BENELLI	**VELVET 400 DUSK**	**400**	**2003**		**X**	
BETA	**RR 50 ENDURO**	**50**	**2010**		**X**	
BETA	**RR 50 SUPERMOTARD**	**50**	**2008**		**X**	
BETA	**RR 50 ENDURO ALU**	**50**	**2004**	**2007**	**X**	
BETA	**RR 50 SUPERMOTARD ALU**	**50**	**2004**	**2005**	**X**	
CPI	**50 GTR**	**50**	**2002**		**X**	
CPI	**50 GTS**	**50**	**2002**		**X**	
CPI	**125 GTR**	**125**	**2002**		**X**	
CPI	**125 GTS**	**125**	**2002**		**X**	
CPI	**200 GTR**	**200**	**2002**		**X**	
CPI	**200 GTS**	**200**	**2002**		**X**	

AGPA20

MARCA Brand	**MODELLO** Model	**CC**	**DA** From	**A** To	**ANT.** Front	**POST.** Rear
DERBI	**BLACK DEVIL 50**	**50**	**2004**		**X**	
DERBI	**BOULEVARD 50**	**50**	**2009**		**X**	
DERBI	**DRD RACING 50 R**	**50**	**2005**		**X**	
DERBI	**DRD RACING 50 R LTD.**	**50**	**2005**		**X**	
DERBI	**DRD RACING 50 SM**	**50**	**2005**		**X**	
DERBI	**DRD RACING 50 SM LTD.**	**50**	**2005**		**X**	
DERBI	**SENDA 50 SM DRD BLACK EDITION**	**50**	**2003**		**X**	
DERBI	**SENDA BAJA**	**125**	**2006**		**X**	
FACTORY	**RP 50 DESERT**	**50**	**2004**		**X**	
FACTORY	**SM 50 CHRONO**	**50**	**2004**		**X**	
FACTORY	**SP 50 CHRONO**	**50**	**2004**		**X**	
FACTORY	**YR 50 DESERT**	**50**	**2004**		**X**	
FANTIC	**50 REGOLARITÀ CASA**	**50**	**2008**		**X**	
FANTIC	**SUPERSEI 50 MOTARD**	**50**	**2008**		**X**	
GASGAS	**EC 50 ROOKIE**	**50**	**2005**		**X**	
GENERIC	**TOXIC 50**	**50**	**2007**		**X**	
GENERIC	**TRIGGER 50 SM**	**50**	**2006**		**X**	
GENERIC	**TRIGGER 50 SM COMPETITION**	**50**	**2008**		**X**	
GENERIC	**TRIGGER 50 X**	**50**	**2006**		**X**	
GENERIC	**TRIGGER 50 X COMPETITION**	**50**	**2008**		**X**	
GILERA	**DNA 50**	**50**	**2001**		**X**	
GILERA	**50 RUNNER PJ**	**50**	**2006**		**X**	
GILERA	**50 RUNNER SP**	**50**	**2006**		**X**	
GILERA	**DNA 125**	**125**	**2001**		**X**	
GILERA	**125 NEXUS**	**125**	**2007**		**X**	**X**
GILERA	**FX RUNNER 125 (GRIMECA CAL.)**	**125**	**2000**		**X**	
GILERA	**FX RUNNER 125 (HENGTONG CAL.)**	**125**	**2000**		**X**	
GILERA	**FX RUNNER 125 SP (GRIMECA CAL.)**	**125**	**2000**		**X**	
GILERA	**FX RUNNER 125 SP (HENGTONG CAL.)**	**125**	**2000**		**X**	

ACCOSSATO

PASTIGLIE BRAKE PADS

APPLICAZIONI PER CODICE PASTIGLIA / applications for pads code

AGPA20						
MARCA Brand	MODELLO Model	CC	DA From	A To	ANT. Front	POST. Rear
GILERA	ST 125 RUNNER	125	2008	2012	X	
GILERA	VX RUNNER 125 4T (GRIMECA CAL.)	125	2001		X	
GILERA	VX RUNNER 125 4T (HENGTONG CAL.)	125	2001		X	
GILERA	MAD MUD 175	175	2002		X	
GILERA	DNA 180	180	2001		X	
GILERA	FXR RUNNER 180	180	1998	1999	X	
GILERA	FXR RUNNER 180 (GRIMECA CAL.)	180	2000		X	
GILERA	FXR RUNNER 180 (HENGTONG CAL.)	180	2000		X	
GILERA	FXR RUNNER SP 180 (GRIMECA CAL.)	180	2000		X	
GILERA	FXR RUNNER SP 180 (HENGTONG CAL.)	180	2000		X	
GILERA	VXR 180 RUNNER	180	2001		X	
GILERA	VXR 180 RUNNER 4T (GRIMECA CAL.)	180	2001		X	
GILERA	VXR 180 RUNNER 4T (HENGTONG CAL.)	180	2001		X	
GILERA	FX 200 RUNNER SP	200	1998		X	
GILERA	ST 200 RUNNER	200	2008		X	
GILERA	VXR 200 RUNNER 4T (GRIMECA CAL.)	200	2001		X	
GILERA	VXR 200 RUNNER 4T (HENGTONG CAL.)	200	2001		X	
GILERA	NEXUS 250	250	2007		X	X
GILERA	GP 800	800	2008			X
MALAGUTI	FIFTY	50	2004		X	
MALAGUTI	NKD 50	50	2004		X	
MALAGUTI	PHANTOM MAX 125	125	2004		X	
MALAGUTI	PHANTOM MAX 200	200	2004		X	
MALAGUTI	PASSWORD 250	250	2006		X	
MALAGUTI	PHANTOM MAX 250	250	2005		X	
MALAGUTI	MADISON RS 250	250	2005		X	
MBK	X-POWER	50	2004		X	
MOTORHISPANIA	MH 50 URBAN BIKE	50	2006		X	
PEUGEOT	CITYSTAR 50	50	2014		X	
PEUGEOT	XP S6 50 SUPERMOTARD	50	2004		X	
PEUGEOT	ACTIVE 125	125	2013		X	
PEUGEOT	CITYSTAR 125	125	2011		X	
PEUGEOT	ELYSEO 125	125	2000		X	
PEUGEOT	ELYSTAR 125	125	2003		X	
PEUGEOT	GEOPOLIS 125	125	2006		X	
PEUGEOT	JET FORCE COMPRESSOR 125	125	2003		X	
PEUGEOT	RS GEOPOLIS 125	125	2010		X	
PEUGEOT	SATELIS 125	125	2006		X	
PEUGEOT	ELYSEO 150	150	2000		X	
PEUGEOT	ELYSTAR 150	150	2003		X	
PEUGEOT	CITYSTAR 200	200	2013		X	
PEUGEOT	GEOPOLIS 250	250	2006		X	X
PEUGEOT	SATELIS 250	250	2006		X	X
PEUGEOT	GEOPOLIS 400 (AJP cal.)	400	2007		X	
PIAGGIO	FLY 50	50	2005		X	
PIAGGIO	PRIMAVERA 50	50	2014		X	
PIAGGIO	SPRINT 50	50	2015		X	
PIAGGIO	TPH 50 2T	50	2011		X	
PIAGGIO	FLY 100	100	2007		X	
PIAGGIO	ZIP 100	100	2007		X	
PIAGGIO	946 125	125	2014		X	
PIAGGIO	BEVERLY 125	125	2002		X	X
PIAGGIO	CARNABY 125	125	2008		X	X

AGPA20						
MARCA Brand	MODELLO Model	CC	DA From	A To	ANT. Front	POST. Rear
PIAGGIO	FLY 125	125	2005		X	
PIAGGIO	PRIMAVERA 125	125	2014		X	
PIAGGIO	X10 EXECUTIVE LEFT/REAR 125	125	2013		X	X
PIAGGIO	X7 125	125	2008		X	
PIAGGIO	X8 125	125	2004	2005	X	
PIAGGIO	X9 EVOLUTION LEFT/REAR 125	125	2006		X	
PIAGGIO	X9 LEFT/REAR 125	125	2004		X	
PIAGGIO	XEVO 125	125	2008		X	
PIAGGIO	GT 125 L	125	2004		X	
PIAGGIO	GTS 125	125	2007		X	
PIAGGIO	GTS 125 SUPER	125	2010	2013	X	
PIAGGIO	GTS 125 SUPER I.E.	125	2015		X	
PIAGGIO	GTS 125 SUPERSPORT	125	2013		X	
PIAGGIO	GTV 125	125	2008		X	
PIAGGIO	GTX 125 SUPERHEXAGON (HENGTONG CAL.) (11"WHEELS)	125	2000		X	
PIAGGIO	GTX 125 SUPERHEXAGON (HENGTONG CAL.) (12"WHEELS)	125	2001		X	
PIAGGIO	FLY 150	150	2006		X	
PIAGGIO	PRIMAVERA 150	150	2014		X	
PIAGGIO	X8 STREET 150	150	2006		X	
PIAGGIO	GTX 180 SUPERHEXAGON (HENGTONG CAL.) (11"WHEELS)	180	2000		X	
PIAGGIO	GTX 180 SUPERHEXAGON (HENGTONG CAL.) (12"WHEELS)	180	2001		X	
PIAGGIO	BEVERLY 200	200	2002		X	X
PIAGGIO	CARNABY 200	200	2008		X	X
PIAGGIO	X8 200	200	2004	2005	X	
PIAGGIO	BV 200	200	2002	2005	X	X
PIAGGIO	GT L 200	200	2004		X	
PIAGGIO	BEVERLY 250	250	2007		X	X
PIAGGIO	GT 250 60	250	2006		X	
PIAGGIO	X7 250	250	2008		X	
PIAGGIO	X8 250	250	2006		X	
PIAGGIO	X9 250	250	2005		X	
PIAGGIO	XEVO 250	250	2008		X	
PIAGGIO	BV 250	250	2006		X	X
PIAGGIO	GTS 250 ABS	250	2006		X	
PIAGGIO	GTV 250	250	2008		X	
PIAGGIO	BEVERLY I.E. 300	300	2011		X	
PIAGGIO	BEVERLY TOURER 300	300	2007		X	X
PIAGGIO	CARNABY CRUISER 300	300	2010		X	X
PIAGGIO	X7 EVO I.E. 300	300	2011		X	
PIAGGIO	GTS 300 I.E.	300	2012		X	
PIAGGIO	GTS SUPER 300	300	2009		X	
PIAGGIO	GTS SUPER SPORT I.E. 300	300	2011		X	
PIAGGIO	GTS TOURING I.E. 300	300	2011	2012	X	
PIAGGIO	GTV 300 I.E.	300	2011		X	
PIAGGIO	BEVERLY S 350	350	2014		X	
PIAGGIO	X10 EXECUTIVE LEFT/REAR 350	350	2013		X	X
PIAGGIO	BV 350	350	2012		X	
PIAGGIO	MP3 I.E. 400	400	2007		X	
PIAGGIO	MP3 LT 400	400	2009		X	
PIAGGIO	X8 LEFT/REAR 400	400	2007		X	X
PIAGGIO	XEVO LEFT/REAR 400	400	2008		X	X
PIAGGIO	MP3 500	500	2010		X	
PIAGGIO	X10 EXECUTIVE LEFT/REAR 500	500	2013		X	X
SHERCO	SE 50 ENDURO	50	2007		X	
SHERCO	SM 50 SUPERMOTARD	50	2007		X	
YAMAHA	DT 50 X SUPERMOTARD	50	2004		X	
YAMAHA	TZR 50	50	2003		X	

PASTIGLIE BRAKE PADS

APPLICAZIONI PER CODICE PASTIGLIA / applications for pads code

MESCOLA ORGANICA SINTERIZZATA ED EV1 organic sintered and ev1 compound
OR / ST / EV1

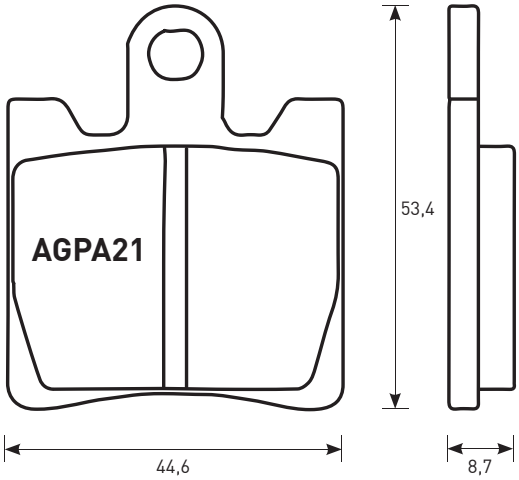

CROSS REFERENCE	
EBC	**FA283/FA423**
OGNIBENE	**265**
BRAKING	**830**
NEWFREN	**.FD.0264**
BREMBO	**7037**
FERODO	**FDB2085**
CL	**1175/3049**
SBS	**146/740**

EQUIVALENT OE #	
OEM Suzuki	**59300 14870**
OEM Suzuki	**59300 14880**
OEM Yamaha	**3P6 W0045 00**

AGPA21						
MARCA Brand	**MODELLO** Model	**CC**	**DA** From	**A** To	**ANT.** Front	**POST.** Rear
DAELIM	**OTELLO 125**	**125**	**2008**		**X**	
DAELIM	**S2 125 FI**	**125**	**2007**		**X**	
DAELIM	**SL 125 U3 FI**	**125**	**2007**		**X**	
DAELIM	**SV 125 S3**	**125**	**2011**		**X**	
KAWASAKI	**SC 250 EPSILON**	**250**	**2002**		**X**	
SUZUKI	**AN 250 BURGMAN**	**250**	**1998**	**2006**	**X**	
SUZUKI	**SKY WAVE 250 (TYPE II)**	**250**	**1998**		**X**	
SUZUKI	**AN 400 BURGMAN**	**400**	**1999**	**2000**	**X**	
SUZUKI	**AN 400 BURGMAN BUSINESS**	**400**	**2001**	**2006**	**X**	
SYM	**GTS 125**	**125**	**2007**		**X**	
SYM	**GTS 250**	**250**	**2007**		**X**	
SYM	**RV 250 EI**	**250**	**2010**		**X**	
SYM	**JOYMAX EVO 300**	**300**	**2010**		**X**	
SYM	**JOYMAX EVO 300 I**	**300**	**2010**		**X**	
SYM	**GTS 300**	**300**	**2009**		**X**	
SYM	**GTS 300 EVO I**	**300**	**2011**		**X**	
SYM	**GT 500**	**500**	**2004**		**X**	
SYM	**GT 500**	**500**	**2007**		**X**	
TRIUMPH	**TROPHY SE 1200**	**1200**	**2013**		**X**	
YAMAHA	**FJR 1300 A**	**1300**	**2013**	**2015**	**X**	
YAMAHA	**FJR 1300 A**	**1300**	**2016**		**X**	
YAMAHA	**FJR 1300 ABS**	**1300**	**2006**	**2012**	**X**	
YAMAHA	**FJR 1300 AE**	**1300**	**2016**		**X**	
YAMAHA	**FJR 1300 AS**	**1300**	**2013**	**2015**	**X**	
YAMAHA	**FJR 1300 AS**	**1300**	**2016**		**X**	
YAMAHA	**XV 1900 A**	**1900**	**2011**		**X**	

ACCOSSATO

PASTIGLIE BRAKE PADS

APPLICAZIONI PER CODICE PASTIGLIA / applications for pads code

MESCOLA ORGANICA, SINTERIZZATA, EV1, EV2 organic, sintered, ev1, ev2 compounds
OR / ST / EV1 / EV2

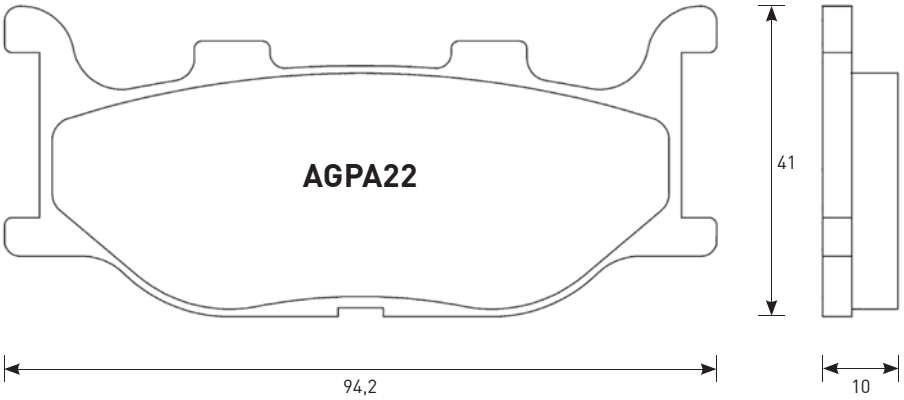

CROSS REFERENCE	
EBC	FA199
OGNIBENE	249
BRAKING	777
NEWFREN	.FD.0205
BREMBO	07YA34
FERODO	FDB2003
CL	2546/3025
SBS	128/691

EQUIVALENT OE #	
OEM Yamaha	5VU W0045 00
OEM Yamaha	4EB W0045 00
OEM Yamaha	5VX W0045 00
OEM Yamaha	1B7 W0045 00
OEM Yamaha	4HM W0045 00
OEM Yamaha	5RU W0045 10

AGPA22						
MARCA Brand	MODELLO Model	CC	DA From	A To	ANT. Front	POST. Rear
BAOXIN	BX 125 L	125	1997		X	
ITALJET	JUPITER 125	125	2002		X	
ITALJET	JUPITER 150	150	2002		X	
ITALJET	JUPITER 250	250	2002		X	
JANSHE	125 JS	125	2002		X	
JANSHE	125 JS 3	125	2002		X	
JINCHENG	JC 150 T-D	150	2006		X	
KEEWAY	250 SUPERSHADOW	250	2006		X	
LONCIN	LX 150 6	150	2002		X	
MBK	250 SKYLINER	250	2000		X	
MBK	400 SKYLINER	400	2004		X	
MZ	S 1000 (MUZ)	1000	2001	2002		X
QUINGOI	QM 125 2V	125	2002		X	
YAMAHA	SR 125	125	1997	2002	X	
YAMAHA	TDR 125 (4GW/GX1/2/3/4)	125	1993	2003	X	
YAMAHA	TDR 125 R	125	1993	2003	X	
YAMAHA	TZR 125	125	1993		X	

AGPA22						
MARCA Brand	MODELLO Model	CC	DA From	A To	ANT. Front	POST. Rear
YAMAHA	TZR 125 (3JB / 4JB / 4HW / 4HX)	125	1993	1995	X	
YAMAHA	XV 125 VIRAGO	125	1997		X	
YAMAHA	XVS 125 DRAG STAR	125	2000		X	
YAMAHA	XV 250 S VIRAGO	250	1995	1998	X	
YAMAHA	XVS 250 DRAG STAR	250	2001		X	
YAMAHA	YP 250 MAJESTY	250	1996		X	
YAMAHA	YP 250 MAJESTY DX/ABS	250	1999		X	
YAMAHA	YP 250 D MAJESTY DX	250	1998		X	
YAMAHA	SR 400	400	2014		X	
YAMAHA	XJR 400 R	400	1993	1996	X	
YAMAHA	YP 400 MAJESTY	400	2005		X	
YAMAHA	XP 500 T MAX	500	2004	2007	X	
YAMAHA	FZ 6 600	600	2004		X	
YAMAHA	FZ6 600 FAZER	600	2004		X	
YAMAHA	FZ6 600 R	600	2009		X	
YAMAHA	XJ 600 N	600	1998		X	
YAMAHA	XJ 600 S DIVERSION	600	1998	2003	X	
YAMAHA	XJ6 600 DIVERSION	600	2009		X	
YAMAHA	MT-03 660	660	2006	2011	X	
YAMAHA	XV 1100 VIRAGO	1100	1999		X	
YAMAHA	XVS 1100 DRAG STAR	1100	1999		X	
YAMAHA	XVS 1100 A DRAG STAR CLASSIC	1100	2000		X	
YAMAHA	XVS 1300 A MIDNIGHT STAR	1300	2007		X	
YAMAHA	XVS 1300 CUSTOM	1300	2014		X	

PASTIGLIE BRAKE PADS

APPLICAZIONI PER CODICE PASTIGLIA / applications for pads code

MESCOLA ORGANICA E SINTERIZZATA organic and sintered compound
OR / ST

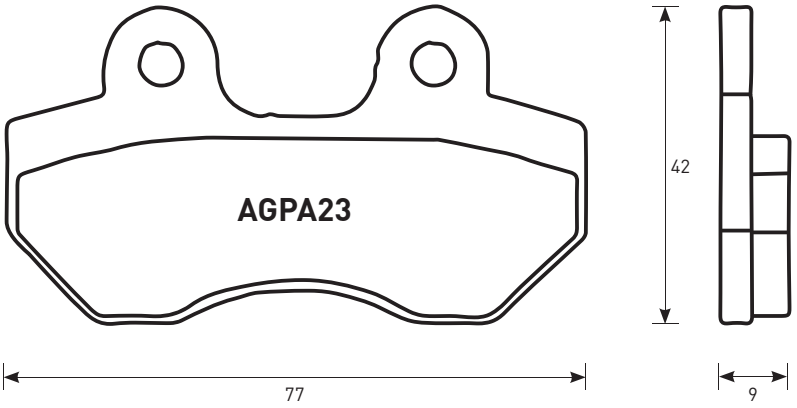

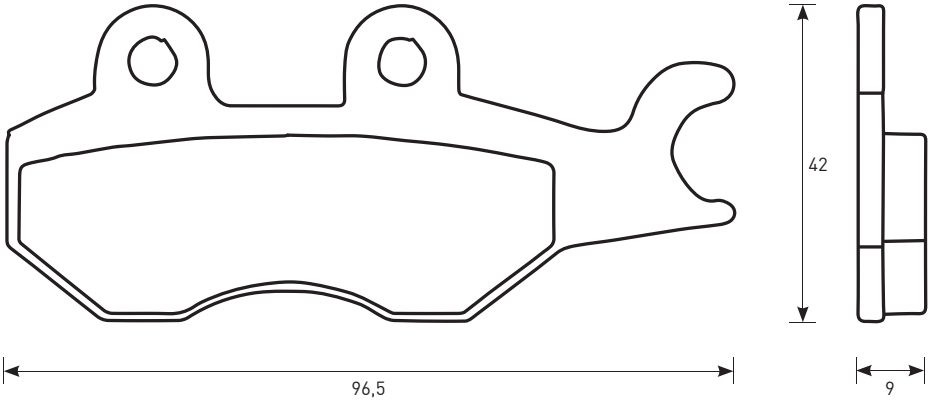

CROSS REFERENCE	
EBC	**FA197**
OGNIBENE	**272**
BRAKING	**725**
NEWFREN	**.FD.0257**
BREMBO	**7033**
FERODO	**FDB2087**
CL	**3062**
SBS	**119/134**

EQUIVALENT OE #	
OEM Honda	**06455 KW6 843**
OEM Honda	**06455 KW6 844**
OEM Kawasaki	**43082 1238**
OEM Kawasaki	**43082 0095**
OEM Kymco	**45105 KECE 305**
OEM Kymco	**45200 KHC4 900NJA**
OEM Kymco	**43105 LDH1 E00**
OEM Kymco	**45200 KKD6 E90NJA**
OEM Kymco	**45150 LLB5 305**
OEM Kymco	**43150 LEA5 306**
OEM Kymco	**45105 KCE3 050M2**

AGPA23						
MARCA Brand	**MODELLO** Model	**CC**	**DA** From	**A** To	**ANT.** Front	**POST.** Rear
AEON	**OZ 125**	**125**	**2014**		**X**	
AEON	**URBAN 125**	**125**	**2014**		**X**	
BENELLI	**CAFFE' NERO RIGHT 125**	**125**	**2008**		**X**	
BENELLI	**CAFFE' NERO RIGHT 250**	**250**	**2008**		**X**	
DAELIM	**SV 125 S3**	**125**	**2011**			**X**
DAELIM	**125 ROADWIN**	**125**	**2004**			**X**
DAELIM	**250 ROADWIN**	**250**	**2008**			**X**
HONDA	**NS - 1 75**	**75**	**1992**		**X**	
HONDA	**NSR 80 R**	**80**	**1993**		**X**	
HONDA	**NSF 100**	**100**	**2006**		**X**	
HONDA	**VT 125 C1 SHADOW**	**125**	**1999**		**X**	
HONDA	**VT 125 C2 SHADOW**	**125**	**1999**	**2000**	**X**	
HONDA	**VT 125 C2 SHADOW**	**125**	**2001**		**X**	

AGPA23						
MARCA Brand	**MODELLO** Model	**CC**	**DA** From	**A** To	**ANT.** Front	**POST.** Rear
HONDA	**XLV 125 Varadero**	**125**	**2001**		**X**	
HONDA	**NSR 150**	**150**	**2002**		**X**	
HONDA	**CBF 250**	**250**	**2004**		**X**	
HONDA	**CB 300**	**300**	**2010**		**X**	
ITALJET	**50 ROLLERCRAFT**	**50**	**2008**			**X**
ITALJET	**125 TORPEDO**	**125**	**2008**			**X**
ITALJET	**150 TORPEDO**	**150**	**2008**			**X**
JONWAY	**YY 125**	**125**	**2008**	**2009**	**X**	**X**
JONWAY	**YY 150**	**150**	**2008**	**2009**	**X**	**X**
JONWAY	**YY 250**	**250**	**2008**	**2009**	**X**	**X**
KEEWAY	**100 PARTNER**	**100**	**2006**		**X**	
KEEWAY	**110 PARTNER**	**110**	**2006**		**X**	
KEEWAY	**125 SPEED**	**125**	**2006**			**X**
KEEWAY	**150 SPEED**	**150**	**2006**			**X**
KYMCO	**B & W 50**	**50**	**2004**		**X**	
KYMCO	**DINK 50/ DINK SPORT 50/ B&W**	**50**	**1999**		**X**	
KYMCO	**K-PIPE 50**	**50**	**2012**		**X**	
KYMCO	**NEW DINK 50**	**50**	**2008**		**X**	
KYMCO	**SPACER 50**	**50**	**1999**		**X**	
KYMCO	**SUPER 9 50 A/C**	**50**	**2002**		**X**	
KYMCO	**SUPER 9 50 L/C**	**50**	**2002**		**X**	
KYMCO	**YAGER 50**	**50**	**2001**		**X**	
KYMCO	**COBRA RACER 100**	**100**	**1999**		**X**	
KYMCO	**AGILITY 16+ 125**	**125**	**2014**			**X**
KYMCO	**B&W 125 / DINK SPORT 125**	**125**	**1999**		**X**	**X**

PASTIGLIE BRAKE PADS

APPLICAZIONI PER CODICE PASTIGLIA / applications for pads code

AGPA23						
MARCA Brand	MODELLO Model	CC	DA From	A To	ANT. Front	POST. Rear
KYMCO	CRUISER 125	125	1999		X	
KYMCO	DINK 125	125	1996	2000	X	X
KYMCO	GRAN DINK 125	125	2002		X	X
KYMCO	MOVIE 125	125	1999		X	
KYMCO	MOVIE XL 125	125	2001		X	
KYMCO	NEW DINK 125	125	2008		X	
KYMCO	QUANNON 15	15	2008		X	X
KYMCO	SPACER 125	125	1999		X	X
KYMCO	TECHNO GT 125	125	2006		X	
KYMCO	125 HIPSTER	125	2001		X	
KYMCO	125 K-PIPE	125	2013		X	
KYMCO	125 PULSAR	125	2001		X	
KYMCO	125 ZING	125	1996		X	
KYMCO	CK-1 125	125	2014		X	
KYMCO	YAGER 125	125	2001		X	X
KYMCO	YAGER 125 GT	125	2009		X	
KYMCO	B&W 150	150	2001		X	
KYMCO	DINK 150	150	1999		X	X
KYMCO	GRAN DINK 150	150	2002		X	X
KYMCO	MOVIE 150 XL	150	2001		X	
KYMCO	150 HIPSTER	150	2001		X	
KYMCO	QUANNON 150	150	2010		X	X
KYMCO	SPACER 150	150	1999		X	X
KYMCO	YAGER 150	150	2001		X	X
KYMCO	ZING 150	150	1999		X	
KYMCO	AGILITY 200 16+	200	2014			X
KYMCO	AGILITY 200 R 16	200	2011			X
KYMCO	DINK 200	200	2004		X	X
KYMCO	I NEW DINK 200	200	2008		X	X
KYMCO	LIKE I 200	200	2010		X	X
KYMCO	YAGER 200	200	2004		X	X
KYMCO	B&W 250/ DINK SPORT 250	250	2001		X	X
KYMCO	PEOPLE 250	250	2003		X	
KYMCO	S 250 PEPLE RIGHT	250	2006		X	
KYMCO	YUP 250	250	2003		X	X
KYMCO	PEOPLE SI RIGHT 300	300	2008		X	
LONCIN	LX 110 4	110	2002		X	
LONCIN	LX 125	125	2002		X	
SUZUKI	AN 400 BURGMAN RIGHT	400	2007		X	
SYM	RS 125	125	2005			X
SYM	RS 150	150	2005			X
TGB	BUFFALO		2003			X
YAMAHA	TZM 50 R	50	1994		X	
YAMAHA	TZR 50	50	1990	2002	X	

MESCOLA ORGANICA E SINTERIZZATA organic and sintered compound
OR / ST

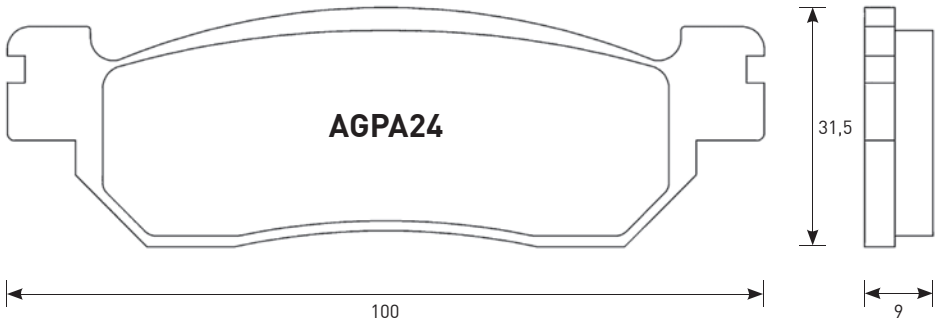

CROSS REFERENCE	
EBC	FA275
OGNIBENE	266
BRAKING	822
NEWFREN	.FD.0259
BREMBO	7043
FERODO	FDB2083
CL	2828/3033
SBS	155/728

EQUIVALENT OE #	
OEM Yamaha	5LB W0045 00
OEM Yamaha	5PW W0046 50
OEM Yamaha	5EK W0045 00
OEM Yamaha	5EB W0046 00
OEM Yamaha	5CG W0046 02

AGPA24						
MARCA Brand	MODELLO Model	CC	DA From	A To	ANT. Front	POST. Rear
ITALJET	JUPITER 125	125	2002			X
ITALJET	JUPITER 150	150	2002			X
MBK	CITYLINER 125	125	2008			X
MBK	SKYLINER 250	250	2000			X
YAMAHA	RZ 50 (5FC1/2)	50	2002		X	
YAMAHA	TW 125	125	1999	2002	X	

AGPA24						
MARCA Brand	MODELLO Model	CC	DA From	A To	ANT. Front	POST. Rear
YAMAHA	YP 125 X-MAX ABS	125	2011			X
YAMAHA	YP 125 X-MAX BUSINESS ABS	125	2011			X
YAMAHA	DT 175	175	2000		X	
YAMAHA	TW 200	200	2001		X	
YAMAHA	TW 200	200	1994		X	
YAMAHA	BRONCO 225	225	1997		X	
YAMAHA	CELLOW 225	225	1997		X	
YAMAHA	XT 225	225	2001		X	
YAMAHA	XG 250 TRICKER	250	2005		X	
YAMAHA	XT 250	250	2008		X	
YAMAHA	VP 250 X-CITY	250	2007			X
YAMAHA	YP 250 D MAJESTY DX	250	1998			X
YAMAHA	YP 250 MAJESTY DX/ABS	250	1999			X
YAMAHA	YP 250 X-MAX	250	2005	2010		X
YAMAHA	YP 400 X-MAX	400	2013			X

PASTIGLIE BRAKE PADS

APPLICAZIONI PER CODICE PASTIGLIA / applications for pads code

MESCOLA ORGANICA, SINTERIZZATA, EV1, EV2 organic, sintered, ev1 and ev2 compounds
OR / ST / EV1 / EV2

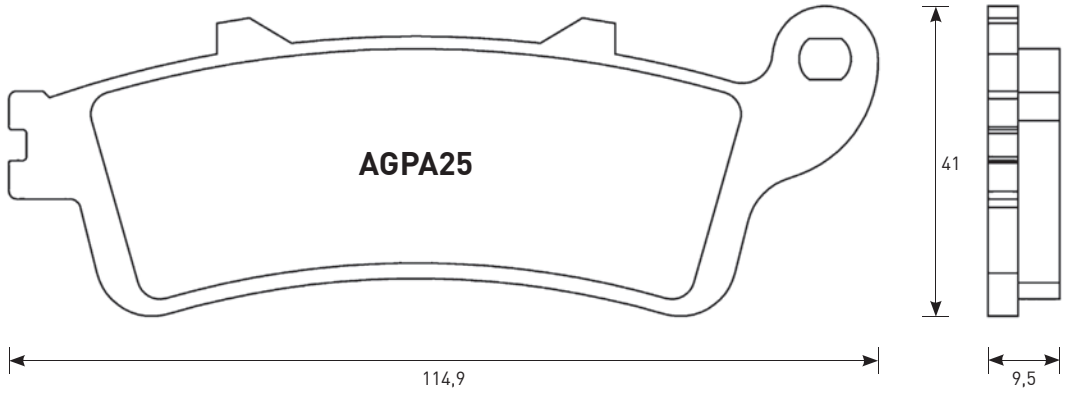

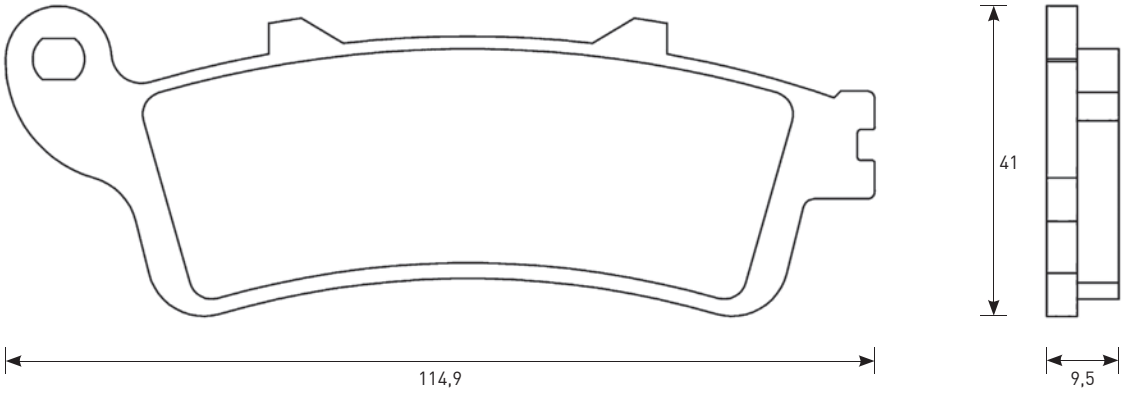

CROSS REFERENCE	
EBC	**SFA281**
OGNIBENE	**250**
BRAKING	**653**
NEWFREN	**.FD.0255**
BREMBO	**7034**
FERODO	**FDB2075**
CL	**3026**
SBS	**147/722**

EQUIVALENT OE #	
OEM Honda	**06455 KFG 641**
OEM Honda	**06455 KFG 642**
OEM Honda	**06455 MCT 691**
OEM Honda	**06455 MCT 692**
OEM Honda	**06435 MAT 006**
OEM Honda	**06435 MAT 016**
OEM Honda	**43105 MT3 007**

AGPA25						
MARCA Brand	**MODELLO** Model	**CC**	**DA** From	**A** To	**ANT.** Front	**POST.** Rear
HONDA	**FES 125 PANTHEON**	**125**	**1998**	**2006**	**X**	
HONDA	**FES 150 PANTHEON**	**150**	**1999**	**2006**	**X**	
HONDA	**ST 1100 A6 ABS-TCS-CBS**	**1100**	**1996**			**X**
HONDA	**ST 1300 PAN EUROPEAN , ABS**	**1300**	**2002**	**2008**		**X**

ACCOSSATO

PASTIGLIE BRAKE PADS

APPLICAZIONI PER CODICE PASTIGLIA / applications for pads code

MESCOLA ORGANICA E SINTERIZZATA
organic and sintered compound

OR / ST

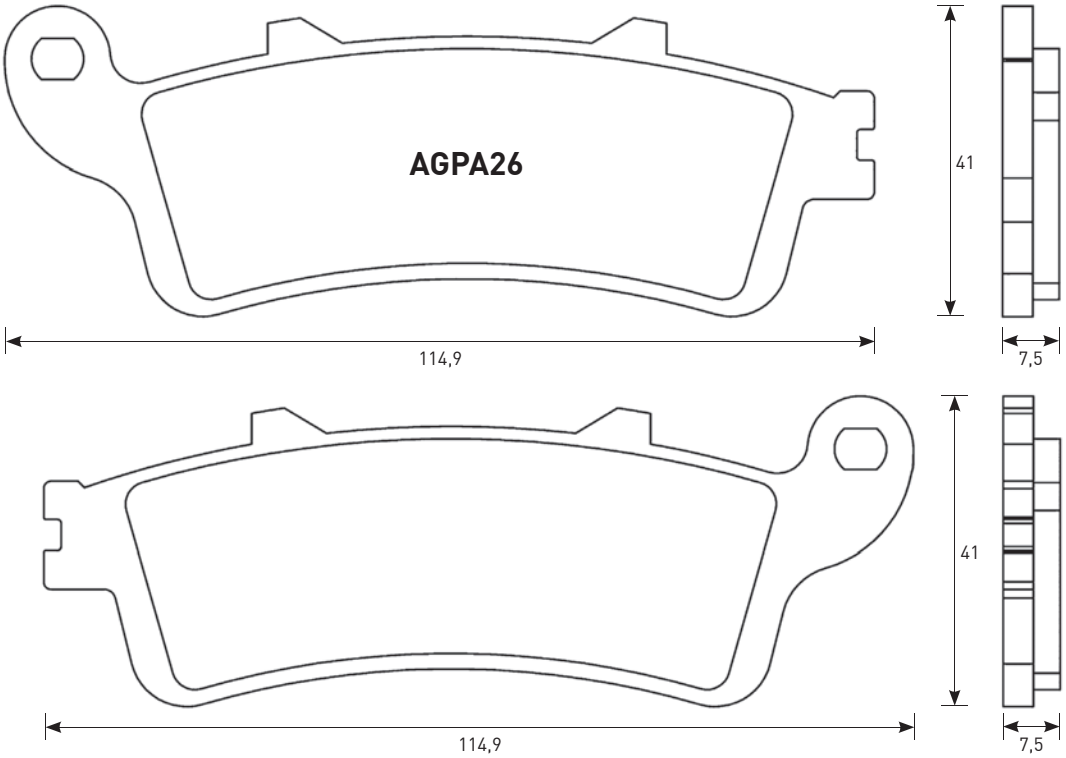

CROSS REFERENCE	
EBC	FA261
OGNIBENE	250
BRAKING	813
NEWFREN	.FD.0254
BREMBO	07HO42
FERODO	FDB2073
CL	2602
SBS	721

EQUIVALENT OE #	
OEM Honda	06455 KPB 406
OEM Honda	06455 KPB 416
OEM Honda	06435 MCC 006
OEM Honda	06455 MAT 006
OEM Honda	06455 KFG 016
OEM Honda	06455 KFG 631
OEM Honda	06455 MAT 006

AGPA26

MARCA Brand	MODELLO Model	CC	DA From	A To	ANT. Front	POST. Rear
HONDA	ST 1100 A6 ABS-TCS-CBS	1100	1996		X	

MESCOLA ORGANICA
organic compound

OR

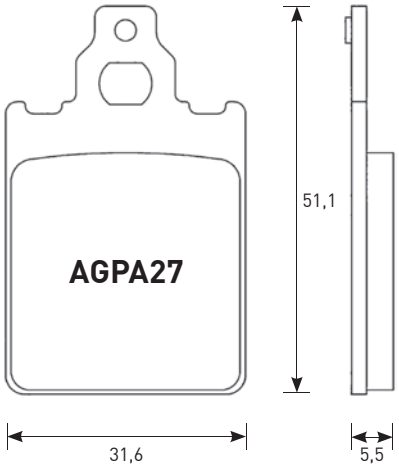

CROSS REFERENCE	
EBC	SFA186
OGNIBENE	172
BRAKING	760
NEWFREN	.FD.0194
BREMBO	7013
FERODO	FDB784
CL	3053
SBS	680/117

EQUIVALENT OE #	
OEM Cagiva	8000 67127
OEM Piaggio	I498414

AGPA27

MARCA Brand	MODELLO Model	CC	DA From	A To	ANT. Front	POST. Rear
APRILIA	SR 50 REPLICA	50	1994		X	
CAGIVA	PRIMA 50	50	1993			X
CAGIVA	CITY 80	80	1993			X
CAGIVA	PRIMA 80	80	1992			X
ITALJET	FORMULA 50	50	1994	1996	X	
ITALJET	FORMULA 80	80	1994		X	
ITALJET	FORMULA 125	125	1994	1996	X	
PIAGGIO	QUARTZ 50	50	1992		X	
PIAGGIO	SKIPPER 80	80	1993	1995	X	
PIAGGIO	SKIPPER 125	125	1993	1995	X	
PIAGGIO	SKIPPER 150	150	1993		X	

PASTIGLIE BRAKE PADS

APPLICAZIONI PER CODICE PASTIGLIA / applications for pads code

MESCOLA ORGANICA E SINTERIZZATA organic and sintered compound
OR / ST

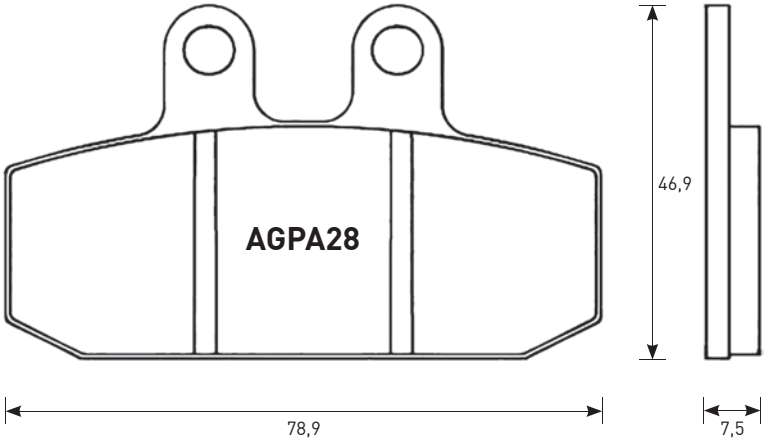

CROSS REFERENCE	
EBC	FA256
OGNIBENE	224
BRAKING	803
NEWFREN	.FD.0238
BREMBO	7006
FERODO	FDB2060
CL	2794/3020
SBS	124/588

EQUIVALENT OE #	
OEM Aprilia	8133798
OEM Honda	06455 GAV 405
OEM Honda	06455 KBS W00
OEM Honda	45105 KBS 405

AGPA28						
MARCA Brand	MODELLO Model	CC	DA From	A To	ANT. Front	POST. Rear
APRILIA	ETX 125	125	1986		X	
APRILIA	ETX 125 TUAREG	125	1986	1987	X	
APRILIA	MX 125 CROSS	125	1985		X	
APRILIA	RED ROSE 125	125	1989		X	
APRILIA	TUAREG 125	125	1986		X	
APRILIA	TUAREG RALLY 125	125	1986		X	
APRILIA	TUAREG RALLY 125	125	1989		X	
APRILIA	TUAREG RALLY 250	250	1986		X	
APRILIA	TUAREG 350	350	1986		X	
APRILIA	TUAREG WIND 350	350	1987		X	
APRILIA	ETX 350	350	1986		X	
APRILIA	ETX 600	600	1986		X	
APRILIA	TUAREG 600	600	1986		X	
APRILIA	NA 850 MANA GT, ABS	850	2009			X
APRILIA	NA 850 MANA, ABS	850	2008			X
CAGIVA	BLUES 125	125			X	
CAGIVA	ROADSTER 125	125	1994		X	
CAGIVA	ROADSTER 125	125	1996		X	
CAGIVA	ROADSTER 200	200	1996		X	
FANTIC	RAIDER 250	250	1985		X	
GARELLI	TIGER 125 XLE	125	1986		X	
GILERA	FAST BIKE 125	125	1988		X	
GILERA	125 KK, KR, KZ	125	1986		X	
GILERA	125 R1, R1S	125	1990		X	
GILERA	ER 125 RALLY	125	1987		X	
GILERA	MXR 125	125	1990		X	
GILERA	RRT 125 NEBRASKA	125	1987		X	
GILERA	RTX 125	125	1986		X	
GILERA	RX 125 ARIZONA HAWK	125	1985		X	
GILERA	X1 125	125	1989		X	

AGPA28						
MARCA Brand	MODELLO Model	CC	DA From	A To	ANT. Front	POST. Rear
GILERA	XR2 125	125	1990		X	
GILERA	200 ARIZONA HAWK	200	1985		X	
GILERA	200 ER	200	1987		X	
GILERA	200 FAST BIKE	200			X	
GILERA	250 ARIZONA RALLY	250			X	
GILERA	350 DAKOTA	350			X	
GILERA	XRT 350	350	1990		X	
GILERA	500 DAKOTA	500	1986		X	
GILERA	RC 600	600	1988		X	
GILERA	XRT 600	600	1989		X	
HONDA	SJ 50 BALI	50	1993	1998	X	
HONDA	EX 100 BALI	100	1996		X	
HONDA	SJ 100 BALI	100	1997		X	
HONDA	CA 125 REBEL	125	1997		X	
HONDA	CLR 125 CITYFLY	125	1999		X	
HONDA	CRM 125 , R	125	1990	1998	X	
HONDA	MTX 125 CAMEL, ITALY	125	1988		X	
HONDA	MTX 125 R, ITALY	125	1986		X	
HONDA	NS 125 ITALY	125	1985	1988	X	
HONDA	NSR 125 F, R	125	1990	1992	X	
HONDA	NSR 125 R, ITALY	125	1989		X	
HONDA	NX 125 , TRANSCITY	125	1990	1998	X	
HONDA	RTV 125 NRS, ITALY	125	1987		X	
HONDA	XL 125 R, P.D., ITALY	125	1985		X	
HONDA	XL 125 R, P.D., ITALY, EX	125	1987		X	
HONDA	XL 200 R, P.D., ITALY	200	1985		X	
MOTO GUZZI	V7 750 RACER	750	2012	2014		X
MOTO GUZZI	V7 750 STONE	750	2012	2014		X
MOTO GUZZI	V7 II 750 RACER	750	2015			X
MOTO GUZZI	V7 II 750 SPECIAL	750	2015			X
MOTO GUZZI	V7 II 750 STONE	750	2015			X
MOTO MORINI	350 EXCALIBUR	350	1987		X	
MOTO MORINI	350 KANGURO	350	1988		X	
MOTO MORINI	501 CAMEL	501	1988		X	
MOTO MORINI	501 EXCALIBUR	501	1987		X	
SACHS	125 ROADSTER V2	125	2001		X	
SACHS	ZX 125	125	1999		X	
SACHS	ZZ 125	125	1999		X	
SIMSON	125	125	2001		X	
SIMSON	125 RS	125	2001		X	

ACCOSSATO

PASTIGLIE BRAKE PADS

APPLICAZIONI PER CODICE PASTIGLIA / applications for pads code

MESCOLE ORGANICA, SINTERIZZATA, STMX, EV1 organic, sintered, stmx and ev1 compounds
OR / ST / STMX / EV1

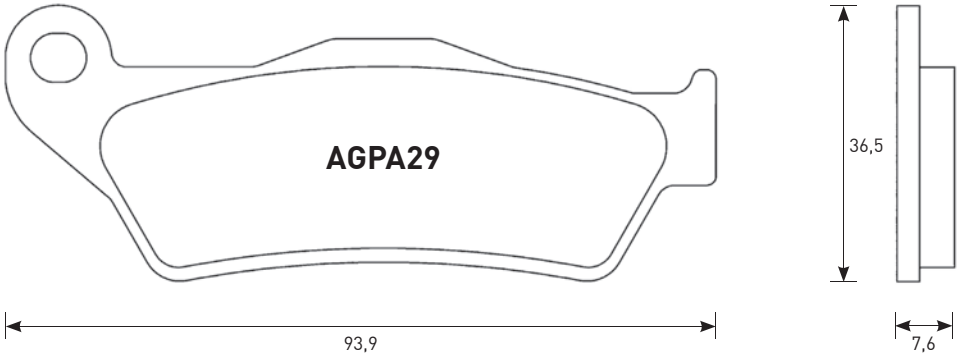

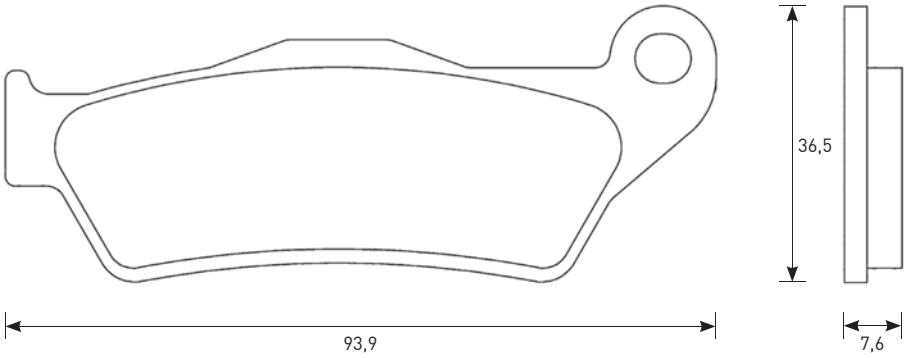

CROSS REFERENCE	
EBC	FA181
OGNIBENE	274
BRAKING	746
NEWFREN	.FD.0186
BREMBO	07BB04
FERODO	FDB2018
CL	2352/3028
SBS	671

EQUIVALENT OE #	
OEM Aprilia	8113593
OEM BMW 34	11 7 717 309
OEM Ducati	61340721A
OEM Gilera	497396
OEM Gilera	647074
OEM KTM 546	13209244
OEM KTM 503	13030300
OEM KTM 584	13030000
OEM KTM 503	13030200
OEM KTM 5DS	F581100
OEM KTM 600	13016000
OEM KTM 770	13020000
OEM KTM 503	13030000
OEM KTM 546	13209044
OEM Moto Guzzi	56546300
OEM Moto Guzzi	30654625
OEM Piaggio	CM077902
OEM Yamaha	11D F5811 00
OEM Yamaha	4GV F5911 00
OEM Yamaha	2C8 W0045 00
OEM Yamaha	4GV W0045 10
OEM Yamaha	1D5 F5811 00
OEM Yamaha	1B9 W0045 00
OEM Yamaha	5VK W0045 00

AGPA29						
MARCA Brand	MODELLO Model	CC	DA From	A To	ANT. Front	POST. Rear
ALFER	VRE 125	125	2000		X	
ALFER	VR 250 ALL MODELS	250	1999		X	
ALFER	VR 250 SUPERMOTARD	250	1999		X	

AGPA29						
MARCA Brand	MODELLO Model	CC	DA From	A To	ANT. Front	POST. Rear
APRILIA	MX 125	125	2004	2007	X	
APRILIA	MX 125 SM	125	2007		X	
APRILIA	RX 125	125	1997		X	
APRILIA	RX 125 ENDURO	125	2008		X	
APRILIA	RX 125 SUPERMOTARD	125	2008		X	
APRILIA	SX 125	125	2008	2013	X	
APRILIA	RST 1000 FUTURA	1000	2001	2003		X
BENELLI	BX 449 CROSS	449	2007		X	
BENELLI	505 ENDURO	505	2008		X	
BIMOTA	DBX 1100	1100	2013			
BMW	G 450 X	450	2008	2010	X	
BMW	HP2 1200 SPORT	1200	2008	2010		X
BMW	S 1000 XR	1000	2015			X
BMW	HP2 1200 ENDURO	1200	2004	2006		X
BMW	1200 GT (with integral ABS)	1200	2008			X
BMW	R 1200 NINE-T	1200	2014			X
BMW	R 1200 NINE-T Scrambler	1200	2016			X
BMW	K 1300 GT	1300	2009	2010		X
CAGIVA	ELEFANT 750	750	1994	1995		X
CAGIVA	ELEFANT 900	900	1993	1997	X	X
CAGIVA	E 900	900	1996		X	X
CCM	MX 450	450	2008	2010	X	
CCM	GP 450	450	2016			
CCM	604 RS	600	2001			
CCM	604E SPORT	600	1999	2001		
CCM	604 SUPERMOTO	600	1999	2001	X	
CCM	644 DS	644	2002	2006	X	

PASTIGLIE BRAKE PADS

APPLICAZIONI PER CODICE PASTIGLIA / applications for pads code

ACCOSSATO

AGPA29						
MARCA Brand	**MODELLO** Model	**CC**	**DA** From	**A** To	**ANT.** Front	**POST.** Rear
CCM	644 R30	644	2002	2006	X	
DUCATI	620 MULTISTRADA	620	2005	2006	X	
DUCATI	695 MONSTER	695	2007	2012	X	
DUCATI	800 MONSTER S2R	800	2005	2007	X	
DUCATI	MULTISTRADA	1200	2015			X
DUCATI	MULTISTRADA S	1200	2015			X
DUCATI	MULTISTRADA S D-Air	1200	2015			X
FACTORY	YR 250	250	1999		X	
GASGAS	50 WILD HP	50	2004		X	X
GASGAS	125 ENDUCROSS	125	1993	1996	X	
GASGAS	EC 125	125	1997	1999	X	
GASGAS	EC 200	200	1999		X	
GASGAS	200 WILD HP	200	2008		X	X
GASGAS	240 WILD HP	240	2004		X	X
GASGAS	EC 250	250	1997	1999	X	
GASGAS	MC 250	250	1997	1999	X	
GASGAS	250 WILD HP	250	2008		X	X
GASGAS	EC 300	250	1999		X	
GASGAS	300 WILD HP	300	2003		X	X
GASGAS	450 WILD HP	450	2003		X	X
GASGAS	515 WILD HP		2009		X	X
HARLEY DAVIDSON	XG 500 STREET	500	2016			X
HARLEY DAVIDSON	XG 750 STREET	750	2016			X
HIGHLAND	MX 450	450	2006		X	
HIGHLAND	V2 950 MOTARD	950	2000		X	
HIGHLAND	V2 950 OUTBACK	950	1999		X	
HONDA	NX 500 DOMINATOR (AUSTRIA)	500	1997		X	
HUSABERG	ALL MODELS		1993	1998	X	
HUSABERG	TE 125	125	2013		X	
HUSABERG	FE 250	250	2013		X	
HUSABERG	TE250	250	2011	2013	X	
HUSABERG	TE300	300	2011	2013	X	
HUSABERG	FE350	350	2013		X	
HUSABERG	FE390	390	2010	2013	X	
HUSABERG	FC 400	400	1999	2002	X	
HUSABERG	FE 400 E,S	400	1999	2003	X	
HUSABERG	FC 450	450	2003	2008	X	
HUSABERG	FE 450 / E	450	2004	2008	X	
HUSABERG	FE 450	450	2009	2013	X	
HUSABERG	FX 450 E	450	2003	2008	X	
HUSABERG	FC 470 / E	470	2001	2002	X	
HUSABERG	FX 470 / E	470	2001	2002	X	
HUSABERG	FE 501 ES	501	1999	2004	X	
HUSABERG	FE 501	501	2013		X	
HUSABERG	FC 501	501	1999	2001	X	
HUSABERG	TC 510	510	2002	2004	X	
HUSABERG	FC 550	550	2001	2005	X	
HUSABERG	FE 550 E	550	2004	2008	X	
HUSABERG	FE 570	570	2009	2013	X	
HUSABERG	FC 600	600	1999	2001	X	
HUSABERG	FC 600 S, E	600	1999	2002	X	
HUSABERG	FE 650 E	650	2001	2008	X	
HUSABERG	FX 650 E	650	2001	2005	X	
KRAM IT	GS 250	250	1997		X	
KRAM IT	MX 250	250	1997		X	
KRAM IT	SM 250	250	1997		X	
KTM	EXC 125 ENDURO	125	1999	2004	X	
KTM	GS 125	125	1992	1997	X	

AGPA29						
MARCA Brand	**MODELLO** Model	**CC**	**DA** From	**A** To	**ANT.** Front	**POST.** Rear
KTM	LC2 125	125	1999		X	
KTM	MX 125	125	1992	1993	X	
KTM	SX 125	125	1996	2009	X	
KTM	SX 144	144	2007	2008	X	
KTM	SX 150	150	2009		X	
KTM	EXC 200 ENDURO	200	1999	2004	X	
KTM	SX 200	200	2003	2004	X	
KTM	EXC 250 ENDURO / ENDURO 4T	250	1999	2006	X	
KTM	EXC-F 250 ENDURO	250	2007		X	
KTM	MX 250	250	1992	1993	X	
KTM	SX 250	250	1996	2009	X	
KTM	SX-F 250	250	2006	2009	X	
KTM	EXC 300	300	1993	1996	X	
KTM	EXC 300 ENDURO	300	1999	2004	X	
KTM	MX 300	300	1992		X	
KTM	EXC-F 350	350	2011		X	
KTM	SX-F 350	350	2011		X	
KTM	MX 360	360	1996	1997	X	
KTM	SX 360	360	1996	1997	X	
KTM	XC 360	360	1996	1997	X	
KTM	EXC 380 ENDURO	380	1999		X	
KTM	MX 380	380	1998		X	
KTM	SX 380	380	1998	2002	X	
KTM	XC 380	380	1998		X	
KTM	EXC 400 RACING	400	2000	2004	X	
KTM	LC4 400	400	1993		X	
KTM	LC4-E 400 ENDURO	400	1999		X	
KTM	SC 400	400	1999		X	
KTM	SX 400 RACING	400	2000	2002	X	
KTM	SXC 400 TIAINEN REPLICA	400	1999	2000	X	
KTM	EXC 450 RACING	450	2004		X	
KTM	XC-F 450	450	2006		X	
KTM	MX 500	500	1992	1993	X	
KTM	XC-F 505	505	2008	2009	X	
KTM	EXC 520 RACING	520	2000	2002	X	
KTM	SX-F 520 RACING	520	2000	2002	X	
KTM	EXC 525 RACING	525	2003	2004	X	
KTM	MXC 525 DESERT	525	2003	2004	X	
KTM	SX-F 525 RACING	525	2003	2006	X	
KTM	EXC 530 RACING	530	2008		X	
KTM	SXC 540 TIAINEN REPLICA	540	1999	2000	X	
KTM	LC4 600 SIX DAYS	600	1992		X	
KTM	EGS 620 ENDURO / EGS-E	620	1996	1999	X	
KTM	EGS 620 ADVENTURE / RALLYE / EGS-E	620	1999		X	
KTM	LC4 620 COMPETITION	620	1999		X	
KTM	LC4 620 COMPETITION SUPERMOTO	620	2000		X	
KTM	LC4 620 RXC	620	1995		X	
KTM	LC4 620 SUPERCOMPETITION	620	2001		X	
KTM	SC 620	620	1999		X	
KTM	SX 620	620	1995	1999	X	
KTM	LC4 625 SC SUPERMOTO	625	2002	2004	X	
KTM	SXC 625	625	2003	2004	X	
KTM	LC4 640 ADVENTURE	640	1999	2004	X	

ACCOSSATO

PASTIGLIE BRAKE PADS

APPLICAZIONI PER CODICE PASTIGLIA / applications for pads code

AGPA29						
MARCA Brand	MODELLO Model	CC	DA From	A To	ANT. Front	POST. Rear
KTM	LC4-E 640 ENDURO	640	1999		X	
KTM	LC4-E 640 SUPERMOTO	640	1999	2002	X	
KTM	LC4 660 RALLY	660	2001	2003	X	
KTM	950 SM	950	2005			X
KTM	950 SMR	950	2007			X
KTM	950 SUPERENDURO R	950	2006			X
KTM	990 ADVENTURE / S	990	2006			X
KTM	990 SUPERMOTO / R	990	2010			X
KTM	990 SUPER MOTO T	990	2009			X
KTM	1050 ADVENTURE	1050	2015			X
KTM	1190 ADVENTURE	1190	2013			X
KTM	1290 SUPER ADVENTURE	1290	2015			X
MAICO	250 MOTOCROSS	250	1999		X	
MAICO	250 ENDURO	250	1999		X	
MAICO	500 SUPERMOTARD	500	1999		X	
MAICO	500 MOTOCROSS	500	1999		X	
MAICO	500 ENDURO	500	1999		X	
MOTO GUZZI	ES 1100 QUOTA	1100	1999			X
MOTO GUZZI	V 1100 BREVA ABS	1100	2005	2007		X
MOTO GUZZI	1200 BREVA	1200	2008			X
MOTO GUZZI	1200 GRISO 8V	1200	2007			X
MOTO GUZZI	1200 NORGE	1200	2006			X
MOTO GUZZI	1200 NORGE GT 8V	1200	2010			X
MOTO GUZZI	1200 SPORT	1200	2007	2008		X
MOTO GUZZI	1200 SPORT 8V	1200	2012			X
MOTO GUZZI	1200 SPORT 8V SE	1200	2012			X
MOTO GUZZI	1200 STELVIO	1200	2008	2011		X
MOTO GUZZI	1200 STELVIO 8V SE	1200	2012			X
MOTO GUZZI	1200 STELVIO NTX	1200	2009	2011		X
MOTO MORINI	1200 GRANFERRO	1200	2010			X
MOTO MORINI	1200 GRANPASSO	1200	2008	2010		X
MOTO MORINI	1200 GT	1200	2010			X
MOTO MORINI	1200 SCRAMBLER	1200	2009			X
PRAGA	ED 250	250	1999		X	
PRAGA	CD 610	610	1999		X	
RIEJU	MRX 250 MARATHON	250	2010		X	
RIEJU	MRX 450 MARATHON	450	2008		X	
SHERCO	SE 250 R	250	2014		X	
SHERCO	SE 250 2.5i Enduro	250	2006	2011	X	
SHERCO	SE 250 F, F-R	250	2014		X	
SHERCO	SE 250 i/Ir	250	2012	2013	X	
SHERCO	SE 250 i-F	250	2013		X	
SHERCO	SX 250 2.5 i-F	250	2009	2011	X	
SHERCO	SCF-R	300	2016		X	
SHERCO	SE 300, R	300	2014		X	
SHERCO	SE 300 3.0 i-F	300	2010	2011	X	
SHERCO	SE 300 F, F-R	300	2014		X	
SHERCO	SE 300 i/Ir	300	2012	2013	X	
SHERCO	SE 300 i-F	300	2013		X	
SHERCO	SE 450 4.5i ENDURO	450	2004	2011	X	
SHERCO	SE 450 F, F-R	450	2014		X	
SHERCO	SE 450 Ie	450	2012	2013	X	
SHERCO	SE 510 5.1i ENDURO	510	2006	2011	X	
SHERCO	SE 510 iR	510	2012	2013	X	
SWM	RS 300 R	300	2015		X	
SWM	RS 500 R	500	2015		X	

AGPA29						
MARCA Brand	MODELLO Model	CC	DA From	A To	ANT. Front	POST. Rear
TM	80 CROSS	80	1996	2000	X	
TM	85	85	2001	2012	X	
TM	125	125	1996	2005	X	
TM	125 ENDURO	125	2001	2005	X	
TM	250	250	2001	2005	X	
TM	250 E	250	1995	2000	X	
TM	250 ENDURO	250	2001	2005	X	
TM	250 F	250	2001	2005	X	
TM	250 F ENDURO	250	2000	2005	X	
TM	300	300	1998	2005	X	
TM	300 ENDURO	300	2001	2005	X	
TM	320	320	1996	1997	X	
TM	400 F	400	2000	2001	X	
TM	400 F ENDURO	400	2001		X	
TM	450 F	450	2002	2005	X	
TM	450 F ENDURO	450	2002	2005	X	
TM	530 F	530	2001	2005	X	
TM	530 F ENDURO	530	2001	2005	X	
VERTEMATI	C 500 CROSS	500	2002	2004	X	
VERTEMATI	E 501 ENDURO	501	2002	2004	X	
VERTEMATI	S 501 SUPERMOTARD	501	2002	2004	X	
VOR	400 CROSS	400	2000	2001	X	
VOR	400 ENDURO	400	2000	2001	X	
VOR	EN 400	400	2002		X	
VOR	MX 400	400	2002		X	
VOR	EN 450	450	2002		X	
VOR	MX 450	450	2002		X	
VOR	500 492 ENDURO	500	1999		X	
VOR	500 495 CROSS	500	1999		X	
VOR	EN 530	524	2002		X	
VOR	MX 530	524	2002		X	
WRM	450 MX	450	2006		X	
YAMAHA	YZF 125 R	125	2008	2013	X	
YAMAHA	TT 600 E,S	600	1996		X	
YAMAHA	TT 600 R	600	1993	1995	X	
YAMAHA	TT 600 R	600	1998		X	
YAMAHA	XT 660 Z TENERE	600	2008	2014	X	
YAMAHA	XT 660 Z TENERE ABS	600	2011	2014	X	
ZERO	FX ZF2.8		2015		X	
ZERO	FX ZF5.7		2015		X	
HUSQVARNA	CR125	125	1996	2013	X	
HUSQVARNA	SM 125 S	125	2009	2013	X	
HUSQVARNA	SM 125 S 4T	125	2011	2013	X	
HUSQVARNA	SM 125 SUPERMOTARD, S	125	1999	2013	X	
HUSQVARNA	TC 125	125	2014		X	
HUSQVARNA	TE 125	125	2014		X	
HUSQVARNA	TE 125 4T	125	2011	2013	X	
HUSQVARNA	WR 125	125	1996	2013	X	
HUSQVARNA	WRE 125	125	1996	2013	X	
HUSQVARNA	CR 250	250	1996	2005	X	
HUSQVARNA	FC250	250	2014		X	
HUSQVARNA	FE250	250	2014		X	
HUSQVARNA	TC250	250	2002	2014	X	
HUSQVARNA	TE250	250	2002	2014	X	
HUSQVARNA	TE250 4T	250	2010	2013	X	
HUSQVARNA	WR250	250	1996	2013	X	
HUSQVARNA	TC300	300	2014		X	
HUSQVARNA	TE300	300	2014		X	
HUSQVARNA	WR300	300	2009	2013	X	
HUSQVARNA	TE310 4T	310	2010	2013	X	

PASTIGLIE BRAKE PADS

APPLICAZIONI PER CODICE PASTIGLIA / applications for pads code

AGPA29						
MARCA Brand	**MODELLO** Model	**CC**	**DA** From	**A** To	**ANT.** Front	**POST.** Rear
HUSQVARNA	FC350	350	2014		X	
HUSQVARNA	TE350	350	1996	2013	X	
HUSQVARNA	WR360	360	1998	2013	X	
HUSQVARNA	TE400	400	2001	2013	X	
HUSQVARNA	TE410	410	1996	2013	X	
HUSQVARNA	TC449	450	2011	2013	X	
HUSQVARNA	TE449	450	2011	2013	X	
HUSQVARNA	FC450	450	2014		X	
HUSQVARNA	FE450	450	2014		X	
HUSQVARNA	TC450	450	2002	2010	X	
HUSQVARNA	TE450	450	2002	2010	X	

AGPA29						
MARCA Brand	**MODELLO** Model	**CC**	**DA** From	**A** To	**ANT.** Front	**POST.** Rear
HUSQVARNA	TE450	450	2014		X	
HUSQVARNA	FE501	500	2010		X	
HUSQVARNA	TC510	510	2002	2010	X	
HUSQVARNA	TE510	510	2002	2010	X	
HUSQVARNA	TE 510 Centennial	510	2004	2005	X	
HUSQVARNA	TE511	511	2011	2014	X	
HUSQVARNA	TC570	570	2001	2013	X	
HUSQVARNA	TE570	570	2001	2013	X	
HUSQVARNA	TC610	610	1996	2013	X	
HUSQVARNA	TE610 Rallye	610	1996	2013	X	
HUSQVARNA	TE630	630	2010	2014	X	

MESCOLA ORGANICA E SINTERIZZATA organic and sintered compound
OR / ST

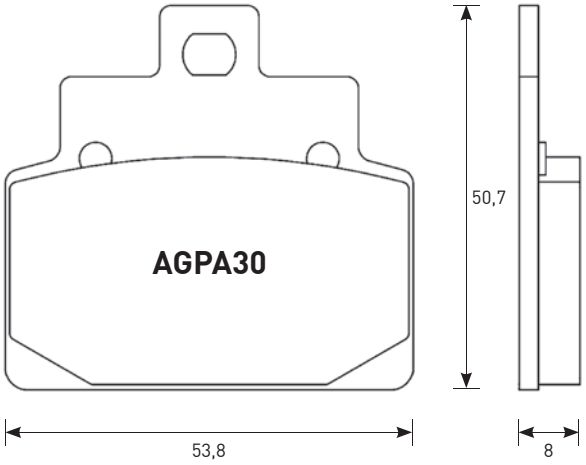

CROSS REFERENCE	
EBC	SFA301
OGNIBENE	153
BRAKING	842
NEWFREN	.FD.0271
BREMBO	7021
FERODO	FDB2095
CL	3064
SBS	153/748

EQUIVALENT OE #	
OEM Aprilia	8213460
OEM Aprilia	8213462
OEM Aprilia	8213460

AGPA30						
MARCA Brand	**MODELLO** Model	**CC**	**DA** From	**A** To	**ANT.** Front	**POST.** Rear
APRILIA	50 SCARABEO 4T	50	2004		X	
APRILIA	SCARABEO 100	100	2000		X	
APRILIA	SCARABEO 100 4T	100	2003		X	
APRILIA	SCARABEO NET 100	100	2010		X	
APRILIA	HABANA/CUSTOM 125	125	2000		X	
APRILIA	LEONARDO 125	125	1999		X	X
APRILIA	LEONARDO 125 (Grimeca cal.)	125	1999			X
APRILIA	MOJITO/MOJITO CUSTOM 125	125	2002		X	
APRILIA	SR 125	125	1999		X	
APRILIA	LEONARDO 150	150	1999		X	X
APRILIA	LEONARDO 150 (Grimeca cal.)	150	1999			X
APRILIA	MOJITO 150 ALL MODELS	150	2003	2004	X	
APRILIA	SR 150	150	2000		X	
APRILIA	LEONARDO 250	250	1999	2002	X	
APRILIA	LEONARDO 300 (Grimeca cal.)	300	2005			X

ACCOSSATO

PASTIGLIE BRAKE PADS

APPLICAZIONI PER CODICE PASTIGLIA / applications for pads code

MESCOLA ORGANICA E SINTERIZZATA organic and sintered compound
OR / ST

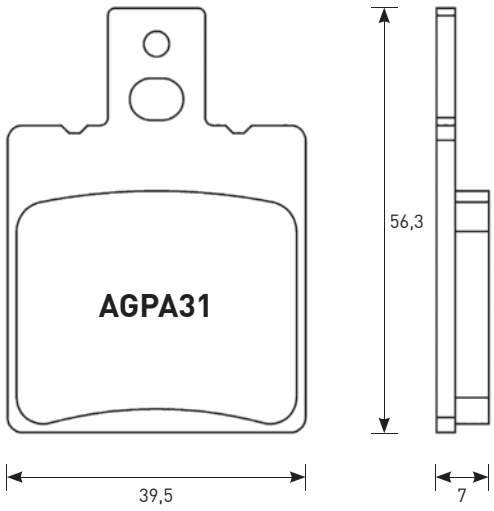

CROSS REFERENCE	
EBC	FA47
OGNIBENE	282
BRAKING	612
NEWFREN	.FD.0012
BREMBO	07BB01
FERODO	FDB207
SBS	138/519/583

EQUIVALENT OE #	
OEM Aprilia	8213197
OEM Aprilia	8113651
OEM Cagiva	8000 68794
OEM Cagiva	8000 46147
OEM Ducati	61340281A
OEM Ducati	61340541A
OEM Ducati	61340311A
OEM Ducati	61340071A
OEM Ducati	61340081A
OEM Moto Guzzi	276546100
OEM Moto Guzzi	31654665
OEM Moto Guzzi	19654601
OEM Moto Guzzi	36139666
OEM Moto Guzzi	27654610
OEM Moto Guzzi	19654600
OEM MZ 9021	35000
OEM Yamaha	3SH F5811 20

AGPA31						
MARCA Brand	MODELLO Model	CC	DA From	A To	ANT. Front	POST. Rear
ALFER	MC 80	80	1987		X	
ALFER	MC 125	125	1987		X	
ALFER	MC 125	125	1988			X
ALFER	GR ENDURO 250	250	1985		X	
ALFER	GR ENDURO 250	250	1988			X
ALFER	MC 250	250	1985		X	
ALFER	MC 250	250	1987		X	X
ALFER	MC 250	250	1988			X
ALFER	GR 300	300	1985		X	
ALFER	GR ENDURO 300	300	1988			X
APRILIA	ET 50	50	1985		X	
APRILIA	RS 50	50	1993	1995	X	X
APRILIA	RS 50	50	1996	1999	X	
APRILIA	SR R FACTORY (PINZA GRIMECA) 50	50	2004	2005	X	
APRILIA	TUAREG 50	50	1985		X	
APRILIA	TUONO 50	50	2004			X
APRILIA	AF1 125	125	1987			X
APRILIA	AF1 REPLICA 125	125	1989	1991		X

AGPA31						
MARCA Brand	MODELLO Model	CC	DA From	A To	ANT. Front	POST. Rear
APRILIA	AF1 SINTESI 125	125	1989	1991		X
APRILIA	AF1 EUROPA 125	125	1990	1991		X
APRILIA	AF1 FUTURA 125	125	1990	1991		X
APRILIA	CLASSIC 125	125	1996			X
APRILIA	ETX TUAREG 125	125	1986	1987		X
APRILIA	RED ROSE 125	125	1989	1990		X
APRILIA	SPORT PRO 125	125	1992			X
APRILIA	TUAREG 125	125	1987			X
APRILIA	TUAREG AS 125	125				X
APRILIA	TUAREG RALLY 125	125	1989	1990		X
APRILIA	TUONO 125	125	2004			X
APRILIA	CLIMBER 200	200	1993		X	X
APRILIA	TUAREG RALLY 250	250	1986			X
APRILIA	MX CROSS 250	250	1985		X	
APRILIA	RS 250	250	1995	1996		X
APRILIA	RS 250	250	1997	2002		X
APRILIA	RS PISTA 250	250	2004			X
APRILIA	RX 250	250	1986		X	
APRILIA	ETX 350	350	1986			X
APRILIA	TUAREG 350	350	1986			X
APRILIA	TUAREG 350	350	1988	1989		X
APRILIA	TUAREG WIND 350	350	1987	1988		X
APRILIA	ETX 600	600	1986			X
APRILIA	TUAREG 600	600	1986			X
APRILIA	TUAREG WIND 600	600	1988			X
ARMSTRONG	MX 500	500	1986		X	
ARMSTRONG	MX 600	600	1986		X	
ASPES	SINTESI 125	125	1988			X
ATK	ATK CC/MX 250	250	1991	1992		X
ATK	ATK ES/CC/MX/D 350	350	1991	1992		X
ATK	ATK GS 350	350	1993		X	X
ATK	ATK CC/MX 406	398	1991	1992		X
ATK	ATK 560		1984	1988	X	
ATK	ATK ES/CC/MX/D 604	562	1991	1992		X
ATK	ATK 640	640	1993		X	X
BENELLI	T 124	124	1983		X	
BENELLI	2CE 125	125	1976	1978	X	
BENELLI	CUSTOM 125	125	1985		X	
BENELLI	JARNO 125	125	1989			X
BENELLI	SPORT 125	125			X	
BENELLI	T 125	125	1976		X	
BENELLI	TT 125	125			X	
BENELLI	BX 125	125	1989			X
BENELLI	BXK 125	125	1988		X	
BENELLI	E L.C. 125	125	1985		X	
BENELLI	2CE 250	250			X	
BENELLI	DISC 250	250	1976		X	
BENELLI	304	230	1983		X	
BENELLI	4T TURISMO 350	350			X	
BENELLI	354	345,5	1978		X	
BENELLI	354	345,5	1979		X	
BENELLI	354	345,5	1980		X	
BENELLI	354	345,5	1981		X	
BENELLI	354	345,5	1982		X	
BENELLI	SPORT 354	345,5	1983		X	X
BENELLI	4 500	500	1976		X	
BENELLI	4T 500	500	1976		X	
BENELLI	SPORT 654	498,5	1983		X	X
BENELLI	TORNADO 3 900	900	2000	2002		X
BENELLI	TNT 1100	1100	2004			X
BETA	CRONO 502 50	50	1997		X	

PASTIGLIE BRAKE PADS

APPLICAZIONI PER CODICE PASTIGLIA / applications for pads code

ACCOSSATO

AGPA31						
MARCA Brand	**MODELLO** Model	**CC**	**DA** From	**A** To	**ANT.** Front	**POST.** Rear
BETA	QUADRA 50	50	1997		X	
BETA	TEMPO 50	50	1997	1998	X	
BETA	KR 50	50	1986	1987	X	
BETA	KR TWIN 50	50	1988			X
BETA	ALP 240	240	1996			X
BETA	CR 250	250	1983		X	
BETA	ALP 260	261	1996			X
BETA	GS / RV 500	500	1984		X	
BIMOTA	FURANO	1000	1992			X
BIMOTA	1D TESI	904	1993			X
BIMOTA	YB7 400	400	1989			X
BIMOTA	VDUE 500	500	1997			X
BIMOTA	BELLARIA 600	600	1991			X
BIMOTA	YB9 SRI 600	600	1997			X
BIMOTA	SUPERMONO 650	650	1997			X
BIMOTA	SB7 750	750	1996			X
BIMOTA	YB4 750	750	1989			X
BIMOTA	1D TESI 851	851	1991			X
BIMOTA	MANTRA 900	900	1997			X
BIMOTA	DB2 900	900	1992			X
BIMOTA	DB4 900	900	1999			X
BIMOTA	1D TESI 906	904	1991			X
BIMOTA	2D TESI 1000	1000	2004	2006		X
BIMOTA	SB8 R 1000	1000	1998			X
BIMOTA	SB8K 1000	1000	2006			X
BIMOTA	SB8K SANTAMONICA 1000	1000	2007			X
BIMOTA	YB11 1000	1000	1997			X
BIMOTA	YB6 1000	1000	1989			X
BIMOTA	YB8 1000	1000	1990			X
BIMOTA	DIECI 1002	1002	1991			X
BIMOTA	DB7 (RAD.CAL) 1099	1100	2009			X
BIMOTA	SB6 1100	1100	1997			X
BREMBO RACING CALIPERS	GOLDLINE ROAD 20.5161.42/51,					
CAGIVA	COCIS 50	50	1989		X	X
CAGIVA	CUCCIOLO 50	50	1997		X	
CAGIVA	LUCKY EXPLORER 50	50	1988		X	
CAGIVA	NUVOLA 50	50	2000		X	
CAGIVA	PRIMA 50	50	1992		X	X
CAGIVA	SUPERCITY 50	50	1993			X
CAGIVA	SUPERCITY 50	50	1992		X	X
CAGIVA	W 4 50	50	1992		X	X
CAGIVA	COCIS 80	80	1991		X	
CAGIVA	SUPERCITY 80	80	1994			X
CAGIVA	SUPERCITY 80	80	1992	1993	X	X
CAGIVA	W 4 80	80	1992		X	
CAGIVA	LR 80	80	1983		X	
CAGIVA	SST 80	80	1983		X	
CAGIVA	SXT 80	80	1983		X	
CAGIVA	ALETTA ELECTRA 125	125	1987		X	
CAGIVA	ALETTA ORO 125	125	1986		X	X
CAGIVA	BLUES 125	125				X
CAGIVA	BLUES 125	125	1993		X	X
CAGIVA	CUCCIOLO 125	125	2000		X	
CAGIVA	CRUISER 125	125	1988			X
CAGIVA	DAKAR 125	125	1986		X	
CAGIVA	ELEFANTRE 125	125	1987		X	
CAGIVA	ENDURO 125	125	1986		X	
CAGIVA	FRECCIA 125	125	1989			X
CAGIVA	FRECCIA C 12 R 125	125	1991			X
CAGIVA	MITO 125	125	1991	1993		X

AGPA31						
MARCA Brand	**MODELLO** Model	**CC**	**DA** From	**A** To	**ANT.** Front	**POST.** Rear
CAGIVA	NUVOLA 125	125	2000		X	
CAGIVA	PLANET 125	125	1997			X
CAGIVA	RAPTOR 125	125	2003			X
CAGIVA	SUPERCITY 125	125	1992			X
CAGIVA	TAMANACO 125	125	1989			X
CAGIVA	W 8 125	125	1992	1995	X	X
CAGIVA	K7 125	125	1991			X
CAGIVA	N1 125	125	1996			X
CAGIVA	WMX GP-REPLICA 125	125	1986		X	
CAGIVA	WRX 125	125			X	
CAGIVA	ELEFANT 200	200	1986		X	
CAGIVA	MXR 250	250	1982		X	
CAGIVA	SST ALA VERDE 250	250	1981		X	
CAGIVA	WMX GP 250	250	1982		X	
CAGIVA	ALAZURRA 350	350	1985		X	X
CAGIVA	ALAZURRA 350	350	1987		X	X
CAGIVA	ELEFANT 350	350	1986			X
CAGIVA	W 12 350	350	1992			X
CAGIVA	SST 350	350	1983		X	
CAGIVA	SST ALA VERDE 350	350	1981		X	
CAGIVA	SXT ALA ROSA 350	350	1982		X	
CAGIVA	T4 E 350	350	1987		X	
CAGIVA	T4 R 350	350	1987		X	
CAGIVA	MXR 400	400	1982		X	
CAGIVA	MITO 500	500	2007			X
CAGIVA	RIVER 500	500	2000			X
CAGIVA	MXR 500	500	1982		X	
CAGIVA	T4 E 500	500	1987		X	
CAGIVA	WMX 500	500	1985	1986	X	
CAGIVA	WMX CROSS 500	500	1987		X	X
CAGIVA	SP MITO 525	125	2008			X
CAGIVA	RIVER 600	600	1994			X
CAGIVA	ALAZURRA 650	650			X	X
CAGIVA	ELEFANT 650	650	1986			X
CAGIVA	ELEFANT 750	750	1988		X	X
CAGIVA	LUCKY EXPLORER 750	750	1988			X
CAN-AM	ASE 200	200	1986		X	
CAN-AM	ASE 250	250	1986		X	
CAN-AM	MX LC 250	250	1986		X	
CAN-AM	ASE 350	350	1986		X	
CAN-AM	ASE 406	399	1987		X	
CAN-AM	ASE 500	500	1986		X	
CAN-AM	SONIC 560	562	1986		X	
CAN-AM	ASE 560	562	1986		X	
CAN-AM	MX 500	500	1986		X	
CAN-AM	SONIC 560	562	1986		X	
DB MOTORS	ZZ PIRAT 50	50	2000		X	X
DB MOTORS	ZZ SPORT 50	50	2000		X	
DERBI	EASY 50	50	1996		X	
DERBI	MULHACEN 125	125	2007			X
DERBI	TERRA 125	125	2007			X
DERBI	RC 250	250	1985		X	
DUCATI	350	350	1975		X	
DUCATI	F3 350	350	1986		X	X
DUCATI	GTV 350	350	1977		X	X
DUCATI	INDIANA 350	350	1986			X
DUCATI	PASO 350	350	1986		X	X
DUCATI	SPORT 350	350	1977		X	X
DUCATI	MONSTER 400 (JAPAN)	400	2001			X
DUCATI	SS, JUNIOR 400	400	1992			X
DUCATI	SS, NUDA 400	400	1992			X

ACCOSSATO

PASTIGLIE BRAKE PADS

APPLICAZIONI PER CODICE PASTIGLIA / applications for pads code

AGPA31						
MARCA Brand	MODELLO Model	CC	DA From	A To	ANT. Front	POST. Rear
DUCATI	GTV 500	500	1977		X	X
DUCATI	PANTAH 500	500	1985		X	X
DUCATI	SPORT DESMO 500	500	1977		X	
DUCATI	TWIN GTL 500	500	1975		X	
DUCATI	SINGLE 502	502	1993			X
DUCATI	SUPERMONO 502	550	1993			X
DUCATI	MONSTER 600	600	2000	2001		X
DUCATI	SL, TL PANTAH 600	600	1976			X
DUCATI	SS SUPERSPORT 600	600	1995			X
DUCATI	M MONSTER 600	600	1994	1999		X
DUCATI	MONSTER 620 DARK I.E.	620	2002	2006		X
DUCATI	MONSTER 620 I.E., S I.E.	620	2002	2006		X
DUCATI	INDIANA 650	650	1986			X
DUCATI	MONSTER 695	695	2007			X
DUCATI	748 S	748	1999	2002		X
DUCATI	BIPOSTO 748	748	1995	1998		X
DUCATI	748 R	748	2000	2002		X
DUCATI	748 SP	748	1995	1997		X
DUCATI	748 SPS	748	1998	1999		X
DUCATI	INDIANA 750	750				X
DUCATI	MONSTER 750	750	1996	2001		X
DUCATI	MONSTER 750 I.E.	750	2002			X
DUCATI	PASO 750	750	1986		X	X
DUCATI	PASO 750	750	1987			X
DUCATI	PASO 750	750	1988		X	X
DUCATI	750 SS	750				X
DUCATI	SUPERSPORT		1995	1999		X
DUCATI	750 SS, CARENATA	750	1992			X
DUCATI	750 SS, NUDA	750	1992			X
DUCATI	SUPER SPORT 750	750	1992	1994		X
DUCATI	MONSTER 800 DARK I.E., S I.E.	800	2003	2007		X
DUCATI	MONSTER 800 I.E., S I.E.	800	2003	2007		X
DUCATI	MONSTER 800 S2R	800	2005	2007		X
DUCATI	STRADA 851	851	1989			X
DUCATI	SUPERBIKE 851	851	1990			X
DUCATI	SP V 888	888	1993			X
DUCATI	SP4 888	888	1992			X
DUCATI	SPO HF 888	888				X
DUCATI	SPS 888	888	1992			X
DUCATI	STRADA 888	888	1993			X
DUCATI	SUPERBIKE 888	888	1993			X
DUCATI	FE 900	900	1997			X
DUCATI	M 900, IL MONSTER	900	1993	1999		X
DUCATI	MONSTER 900	900	2000	2001		X
DUCATI	MONSTER 900 I.E.	900	2002			X
DUCATI	900 SL	900	1992			X
DUCATI	900 SS	900	1990	1994		X
DUCATI	900 SS SUPERSPORT	900	1995	1997		X
DUCATI	900 SSR	900	1992			X
DUCATI	906 PASO	904	1989			X
DUCATI	907 I. E.	904	1992			X
DUCATI	M 900 STREET MONSTER	900	1994	1999		X
DUCATI	900 MH	900	2000			X
DUCATI	BIPOSTO 916	916	1994			X
DUCATI	MONSTER 916 S4	916	2001	2003		X
DUCATI	916 SPS	916	1997	1998		X
DUCATI	996 SPS	996	1999	2001		X
DUCATI	MONSTER 996 S4R	996	2004			X
DUCATI	996 R	996	2001			X
DUCATI	996, S	996	2002			X

AGPA31						
MARCA Brand	MODELLO Model	CC	DA From	A To	ANT. Front	POST. Rear
DUCATI	998 R	999	2002			X
DUCATI	MONSTER 1000 DARK I-E- , S I.E.	1000	2003			X
DUCATI	MONSTER 1000 I.E., S I.E.	1000	2003			X
FANTIC	KOALA 50	50	1988		X	X
FANTIC	RC CABALLERO 50	50	1991		X	X
FANTIC	COACH 250	250	1991		X	
GARELLI	URKA	50	1991		X	
GARELLI	TIGER XLE 50	50	1986		X	X
GARELLI	GTA 125	125			X	X
GARELLI	GTA 125	125	1983	1985	X	
GARELLI	XR TIGER XRD 125	125	1985		X	
GILERA	SP 01 125	125	1990			X
GILERA	RALLY, R1 50	50			X	
GILERA	SIOUX 50	50	1992		X	X
GILERA	RC TOP RALLY 50	50	1990		X	X
GILERA	ARIZONA HAWK 125	125	1986		X	
GILERA	CRONO 125	125	1992			X
GILERA	FREESTYLE 125	125	1992			X
GILERA	HX, HE 125	125	1983		X	
GILERA	KK, KR, KZ 125	125	1986			X
GILERA	MX1, MRX, SP01 125	125				X
GILERA	R1, R1S 125	125	1990			X
GILERA	SP02 125	125	1990			X
GILERA	CX 125	125	1991			X
GILERA	MXR 125	125	1990			X
GILERA	RX 125	125	1983		X	X
GILERA	XR2 125	125	1990			X
GILERA	FAST BIKE 200	200				X
GILERA	RX 200	200	1983		X	
GILERA	RV 200	200				X
GILERA	ARIZONA HAWK 250	250	1986		X	
GILERA	ARIZONA RALLY 250	250				X
GILERA	ARIZONA RALLY 250	250	1986		X	
GILERA	NGR 250	250	1985			X
GILERA	SATURNO BIALBERO 350	350				X
GILERA	XRT 350	350	1990			X
GILERA	SATURNO BIALBERO 500	500	1990			X
GILERA	SATURNO PIUMA 500	500	1990			X
GILERA	NORDWEST 600	600	1991			X
GILERA	RC 600	600	1988			X
GILERA	XRT 600	600	1989			X
HERCULES	ZX		1986		X	
HUSQVARNA	CR 125	125	1985	1990	X	
HUSQVARNA	CX 125	125	1984	1985	X	
HUSQVARNA	200 PROF	200	1986		X	X
HUSQVARNA	CR 240	240	1984	1985	X	
HUSQVARNA	CR 250	250	1985	1987	X	
HUSQVARNA	CX 250	250	1984	1985	X	
HUSQVARNA	400 ENDURO	400	1985		X	
HUSQVARNA	430 ENDURO	430	1985		X	
HUSQVARNA	CR 500	500	1986		X	
HUSQVARNA	CX/CR 500	500	1984	1985	X	
HUSQVARNA	TC 500	500	1986		X	
HUSQVARNA	504	504	1983		X	
HUSQVARNA	TE 510	510	1986	1987	X	
ISR CALIPERS	2 PISTON (22-027/028/029)					
ISR CALIPERS	4 PISTON (22-025)					
ITALJET	350	350	1983		X	
KEEWAY	ENDURO 125	125	2007			X
KEEWAY	X-RAY 125	125	2007			X

PASTIGLIE BRAKE PADS

APPLICAZIONI PER CODICE PASTIGLIA / applications for pads code

ACCOSSATO

AGPA31						
MARCA Brand	**MODELLO** Model	**CC**	**DA** From	**A** To	**ANT.** Front	**POST.** Rear
KREIDLER	MUSTANG 125	125	1983			X
KTM	BAJA		1986		X	
KTM	COMET 50 PL, TS, RLW, RS, RS4L	50	1986	1991	X	
KTM	COUNTRY,BAJA		1985		X	
KTM	GP 50 DXL, RS1	50			X	
KTM	GXE 50	50	1987		X	
KTM	MX 50	50	1987		X	
KTM	RSV 50	50	1986		X	
KTM	MX 80	80	1986		X	
KTM	MX 80	80	1991		X	
KTM	80 RSL, L, RS, RL, BORA,CHOPPER	80	1980		X	X
KTM	PL 80 WATERCOOLED	80			X	X
KTM	RLW 80	80	1980		X	X
KTM	MX 85	85	1990		X	
KTM	LC 125	125	1985		X	
KTM	LC 125	125	1986		X	X
KTM	MX 125	125	1985		X	
KTM	MX 125	125	1986		X	X
KTM	XC 125	125	1985		X	
KTM	XC 125	125	1986		X	X
KTM	250 BAJA	250	1986		X	
KTM	LC 250	250	1985		X	
KTM	LC 250	250	1986		X	X
KTM	MC 250	250	1983	1984	X	X
KTM	MX 250	250	1983	1984	X	X
KTM	MX 250	250	1985		X	
KTM	MX 250	250	1986		X	X
KTM	XC 250	250	1985		X	
KTM	XC 250	250	1986	1989	X	X
KTM	XC 300	300	1985		X	
KTM	XC 300	300	1986	1990	X	X
KTM	350 COUNTRY CROSS	350	1985		X	
KTM	350 GS	350	1983		X	
KTM	GS4 350 500 K4	350	1983		X	
KTM	K4 350 500 K4	350	1983		X	
KTM	XC 350 , MC	350		1983	X	
KTM	390 GS	390	1983		X	
KTM	XC 390 , MC	390		1983	X	
KTM	XC 420 , MC	420		1983	X	
KTM	MC 495 LELEU	495	1982	1983	X	
KTM	MX 495 LELEU	495	1982	1983	X	
KTM	GS 500 K4	500			X	
KTM	ENDURO		1983		X	
KTM	LC 500	500	1985		X	
KTM	LC 500	500	1986		X	X
KTM	MX 500	500	1985		X	
KTM	MX 500	500	1986		X	X
KTM	XC 500 , MC	500		1983	X	
KTM	4T 600 ENDURO	600	1984		X	
KTM	GS 600	600	1985		X	
KTM	XC 600 CROSS	600	1985		X	
KTM	XCE 600 CROSS	600	1985		X	
KTM	620 DUKE	620	1996	1998		X
KTM	640 DUKE	640	1999	2002		X
LAVERDA	50 GAUCHO	50	1992		X	X
LAVERDA	OR 50 ATLAS	50	1986		X	X
LAVERDA	OR 50 ATLAS	50	1990		X	X
LAVERDA	125 CUSTOM	125	1986		X	
LAVERDA	CU 125 RIDE	125	1986		X	

AGPA31						
MARCA Brand	**MODELLO** Model	**CC**	**DA** From	**A** To	**ANT.** Front	**POST.** Rear
LAVERDA	LB 125 UNO	125	1985		X	
LAVERDA	GS 350 LESMO	350	1986		X	X
LAVERDA	PF 350 ALPINO	350			X	X
LAVERDA	RS 350 ALPINO	350			X	X
LAVERDA	500 ALPINO, S	500	1977		X	X
LAVERDA	OR 600 ATLAS	600	1986			X
LAVERDA	650	650	1992			X
LAVERDA	668	668	1996			X
LAVERDA	GHOST, DIAMANTE 668	668	1997			X
LAVERDA	CUP 750	750	1998			X
LAVERDA	DIAMANTE 750	750	1997			X
LAVERDA	GHOST STRIKE 750	750	1997			X
LAVERDA	S FORMULA 750	750	1997			X
LAVERDA	S, S CARENATA 750	750	1997			X
LAVERDA	SPORT 750	750	1999			X
LAVERDA	STRIKE/ BLACK STRIKE 750	750	1999			X
LAVERDA	T8 750	750	1998			X
LAVERDA	JOTA 1000	1000	1995			X
MAICO	GM LC 250	250	1985		X	
MAICO	MD 250	250	1983		X	X
MAICO	GM LC 500	500	1985		X	
MALAGUTI	ENDURO 50	50	1985		X	
MALAGUTI	MRX 50	50	1989		X	
MALAGUTI	RST 50	50	1990		X	X
MALANCA	MARK 125	125	1985		X	
MONTESA	EVASION 260	260	1992			X
MONTESA	COTA 309	240	1989			X
MONTESA	COTA 310	250	1989			X
MONTESA	COTA TRIAL 311	260	1992			X
MOTO GUZZI	IPPOGRIFO		1997			X
MOTO GUZZI	CUSTOM 125	125	1985		X	
MOTO GUZZI	ENDURO TT 125	125	1985		X	
MOTO GUZZI	BX 125	125	1992		X	X
MOTO GUZZI	/4 240	240	1977		X	
MOTO GUZZI	TS 250	250	1975	1976	X	
MOTO GUZZI	350	350	1977		X	X
MOTO GUZZI	FALCO 350	350	1988		X	X
MOTO GUZZI	IMOLA 350	350	1978		X	X
MOTO GUZZI	NEVADA 350	350	1992		X	
MOTO GUZZI	NTX 350	350	1988		X	X
MOTO GUZZI	NTX 350	350	1990		X	
MOTO GUZZI	V35 C 350	350				X
MOTO GUZZI	V35 FLORIDA 350	350				X
MOTO GUZZI	V35 GT 350	350			X	
MOTO GUZZI	V35 GT 350	350	1990			X
MOTO GUZZI	V35 II, IMOLA, IMOLA II 350	350	1977		X	X
MOTO GUZZI	400	400	1979		X	X
MOTO GUZZI	500	500	1977		X	X
MOTO GUZZI	MONZA 500	500	1978		X	X
MOTO GUZZI	V50 1,2,3, MONZA CHOPPER 500	500	1977		X	X
MOTO GUZZI	650	650	1980		X	X
MOTO GUZZI	FLORIDA 650	650			X	X
MOTO GUZZI	GT SESSANTACINQUE 650	650	1989		X	X
MOTO GUZZI	NTX 650	650	1990		X	
MOTO GUZZI	V65 LARIO 650	650	1986		X	X
MOTO GUZZI	V65 NTX 650	650	1987		X	X
MOTO GUZZI	V65 SP, CHOPPER 650	650			X	X
MOTO GUZZI	V65 TT 650	60	1986		X	X
MOTO GUZZI	NEVADA 750	750	1992	1996	X	

ACCOSSATO

PASTIGLIE BRAKE PADS

APPLICAZIONI PER CODICE PASTIGLIA / applications for pads code

AGPA31						
MARCA Brand	MODELLO Model	CC	DA From	A To	ANT. Front	POST. Rear
MOTO GUZZI	NEVADA, CLUB/BASE 750	750	1997	2002	X	X
MOTO GUZZI	TARGA 750	750	1989		X	X
MOTO GUZZI	NTX 750	750	1989		X	X
MOTO GUZZI	RS DAYTONA 1000	1000	1997			X
MOTO GUZZI	V STRADA 1000	1000	1993			X
MOTO GUZZI	V10 CENTAURO 1000	1000	1996			X
MOTO GUZZI	SPORT 1100	1100	1996			X
MOTO GUZZI	EV CALIFORNIA 1100	1100	1997	2000		X
MOTO GUZZI	EV CALIFORNIA, 80 TOURING 1100	1100	2001			X
MOTO GUZZI	V11 , SCURA, SPORT SCURA 1100	1100	2002			X
MOTO GUZZI	V11 LEMANS, LEMANS TENNI, LEMANS ROSSO CORSA 1100	1100	2001			X
MOTO GUZZI	V11 SPORT 1100	1100	1997	2000		X
MOTO GUZZI	V11 SPORT ROSSO MANDELL 1100	1100	2001			X
MOTO GUZZI	V11 SPORT, SPORT NAKED 1100	1100	2001			X
MOTO MORINI	XE COUNTRY 250	250	1988		X	
MOTO MORINI	COGUARO 350	350				X
MOTO MORINI	COGUARO, NEW YORK 350	350	1990			X
MOTO MORINI	DART 350	350	1988			X
MOTO MORINI	DART 350	350	1990			X
MOTO MORINI	INDIANA 350	350	1988			X
MOTO MORINI	KANGURO 350	350	1988			X
MOTO MORINI	RLX EXCALIBUR 350	350	1990			X
MOTO MORINI	DART 400	400	1989	1990		X
MOTO MORINI	S 400	400			X	X
MOTO MORINI	SEI V CLASSIC 500	500	1989		X	
MOTO MORINI	CAMEL 501	480	1988			X
MOTO MORINI	COGUARO 501	501	1989			X
MOTO MORINI	EXCALIBUR 501	500	1989			X
MOTO MORINI	NEW YORK 501	500	1989			X
MOTO MORINI	RLX EXCALIBUR 501	507	1990			X
MOTO MORINI	INDIANA 650	650	1988			X
MOTO MORINI	INDIANA 750	750	1988			X
MZ	(MUZ) SKORPION CUP 660	660	1999			X

AGPA31						
MARCA Brand	MODELLO Model	CC	DA From	A To	ANT. Front	POST. Rear
MZ	(MUZ) SKORPION REPLICA 660	660	1997			X
MZ	(MUZ) SKORPION SPORT 660	660	1995			X
MZ	(MUZ) SKORPION TOUR 660	660	1995			X
MZ	(MUZ) SKORPION TRAVELLER 660	660	1999			X
OSSA	YANQEE 500	500	1978			X
PGO	G-MAX DOPPLER 50	50	2006		X	
PUCH	MAXI 80	80	1988			X
REWACO	FX4		2007		X	
REWACO	FX5		2007		X	
REWACO	FX6		2007		X	
REWACO	HS4		2001		X	
REWACO	HS5		2001		X	
REWACO	HS6		2001		X	
REWACO	RF1		2007		X	
SACHS	SW LOTUS 80	80			X	
SANGLAS	Y 400	400	1979	1980	X	X
SANGLAS	S2 500	500	1979	1980	X	X
SIMSON	HABICT CX 50	50	2001		X	
SIMSON	SPATZ 50	50	1999		X	
SIMSON	SPERBER 50	50	1999		X	
SIMSON	STAR 50	50	1999		X	
SIMSON	IFA 80	80	1989		X	
SIMSON	SR -2 CE 80	80			X	
SIMSON	S CX 83	83			X	
SIMSON	S OR 83	83			X	
SIMSON	SCHIKRA 125	125	1999			X
SWM	GP 125	125	1986		X	X
SWM	S1-S2 125	125			X	
SWM	EXPLORER 250	250	1986		X	X
SWM	PIONER 250	250	1986		X	X
SWM	S1-S2 250	250			X	
SWM	TRL MJ 329	329	1986		X	
TORNAX	RX HF 80	80			X	
YAMAHA	SZR 660	660	1996			X
ZANELLA	RACING MOPED 50	50	1992		X	
ZANELLA	RZA 125	125	1992		X	

PASTIGLIE BRAKE PADS

APPLICAZIONI PER CODICE PASTIGLIA / applications for pads code

MESCOLA ORGANICA E SINTERIZZATA organic and sintered compound
OR / ST

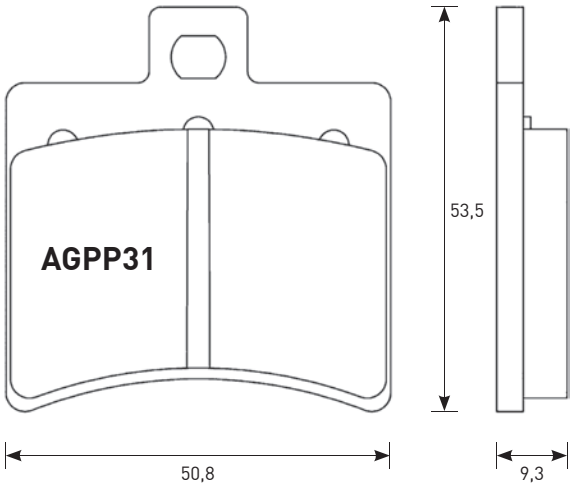

CROSS REFERENCE	
EBC	**FA298**
BRAKING	**840**
NEWFREN	**.FD.0267**
BREMBO	**7020**
FERODO	**FDB2090**
CL	**3055**
SBS	**152/747**

EQUIVALENT OE #	
OEM Aprilia	**8213577**
OEM Aprilia	**8113869**
OEM Aprilia	**8133539**
OEM Aprilia	**8213506**
OEM Aprilia	**8133946**
OEM Aprilia	**8133726**
OEM Aprilia	**8133845**

AGPP31						
MARCA Brand	**MODELLO** Model	**CC**	**DA** From	**A** To	**ANT.** Front	**POST.** Rear
APRILIA	**SCARABEO 50 DITECH**	**50**	**2002**			**X**
APRILIA	**DITECH**		**2002**			**X**
APRILIA	**SR 50 DITECH**	**50**	**2001**			**X**
APRILIA	**SR 50 RACING**	**50**	**2000**			**X**
APRILIA	**SR 50 STREET**	**50**	**2005**			**X**
APRILIA	**125 ATLANTIC**	**125**	**2003**			**X**
APRILIA	**RS 125**	**125**	**2006**			**X**
APRILIA	**125 SCARABEO, SCARABEO GT**	**125**	**1999**	**2005**		**X**
APRILIA	**125 SPORTCITY**	**125**	**2005**			**X**
APRILIA	**150 SCARABEO**	**150**	**1999**			**X**

AGPP31						
MARCA Brand	**MODELLO** Model	**CC**	**DA** From	**A** To	**ANT.** Front	**POST.** Rear
APRILIA	**150 SCARABEO, SCARABEO GT**	**150**	**2004**			**X**
APRILIA	**200 ATLANTIC**	**200**	**2003**			**X**
APRILIA	**200 SCARABEO**	**200**	**2007**			**X**
APRILIA	**200 SCARABEO CLASS**	**200**	**2010**			**X**
APRILIA	**200 SCARABEO IE**	**200**	**2012**			**X**
APRILIA	**200 SCARABEO, SCARABEO GT**	**200**	**2002**	**2003**		**X**
APRILIA	**200 SPORTCITY**	**200**	**2005**			**X**
APRILIA	**250 ATLANTIC IE**	**250**	**2007**			**X**
APRILIA	**250 LEONARDO**	**250**	**1999**	**2002**		**X**
APRILIA	**250 LEONARDO (GRIMECA CAL.)**	**250**	**1999**	**2002**		**X**
APRILIA	**250 SCARABEO, SCARABEO IE**	**250**	**2006**			**X**
APRILIA	**250 SPORTCITY IE**	**250**	**2007**			**X**
APRILIA	**300 SCARABEO SPECIAL**	**300**	**2010**			**X**
APRILIA	**400 SCARABEO IE**	**400**	**2007**			**X**
APRILIA	**500 ATLANTIC LEFT/REAR**	**500**	**2002**	**2005**		**X**
APRILIA	**500 ATLANTIC SPRINT**	**500**	**2006**			**X**
APRILIA	**500 SCARABEO**	**500**	**2003**	**2006**		**X**
APRILIA	**500 SCARABEO CLASS**	**500**	**2010**			**X**
APRILIA	**500 SCARABEO IE**	**500**	**2007**			**X**
BETA	**50 EIKON**	**50**	**2004**			**X**
BETA	**125 EIKON**	**125**	**2004**			**X**
BETA	**150 EIKON**	**150**	**2004**			**X**
DERBI	**125 RAMBLA**	**125**	**2008**			**X**
DERBI	**300 RAMBLA**	**300**	**2008**			**X**
HYOSUNG	**GD 250 EXIV-R**	**250**	**2015**			**X**
HYOSUNG	**GT 250 iR**	**250**	**2015**			**X**
HYOSUNG	**GT 650 iR**	**650**	**2015**			**X**
MALAGUTI	**125 PHANTOM MAX**	**125**	**2004**			**X**
MALAGUTI	**125 SPORT CITY CUBE**	**125**	**2008**			**X**
MALAGUTI	**F-18 125 , WARRIOR**	**125**	**2000**			**X**
MALAGUTI	**R 125 MADISON**	**125**	**1999**			**X**
MALAGUTI	**150 MADISON**	**150**	**1999**			**X**
MALAGUTI	**180 MADISON**	**180**	**2002**			**X**
MALAGUTI	**200 PHANTOM MAX**	**200**	**2004**			**X**
MALAGUTI	**200 SPORT CITY CUBE**	**200**	**2008**			**X**
MALAGUTI	**S 200 MADISON**	**200**	**2003**			**X**
MALAGUTI	**250 MADISON**	**250**	**1999**			**X**
MALAGUTI	**250 PASSWORD**	**250**	**2006**			**X**
MALAGUTI	**250 PHANTOM MAX**	**250**	**2005**			**X**
MALAGUTI	**250 SPORT CITY CUBE**	**250**	**2008**			**X**
MALAGUTI	**RS 250 MADISON**	**250**	**2005**			**X**
MALAGUTI	**300 SPORT CITY CUBE**	**300**	**2008**			**X**
MALAGUTI	**K 400 MADISON**	**400**	**2002**			**X**

ACCOSSATO

PASTIGLIE BRAKE PADS

APPLICAZIONI PER CODICE PASTIGLIA / applications for pads code

MESCOLA ORGANICA, SINTERIZZATA, EV1 E EV2 organic, sintered, ev1 and ev2 compounds
OR / ST / EV1 / EV2

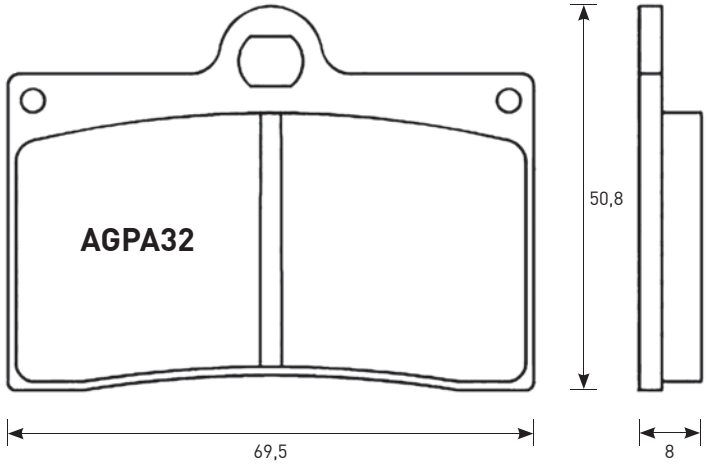

CROSS REFERENCE	
EBC	FA095
OGNIBENE	247
BRAKING	688
NEWFREN	.FD.0093
BREMBO	07BB15
FERODO	FRP419
CL	2247
SBS	566

EQUIVALENT OE #		
4SUF581100	9021055000	107A48653
613400424	BE250122065SM	211021021
61340091A	800094411	211082003
61340041A	211041010	07009R
8113585	2769173	B044201
800078331	800078331	B044202
47002000036	GU30654600	53182ABE19000
573V3030000	GU30654602	

AGPA32						
MARCA Brand	MODELLO Model	CC	DA From	A To	ANT. Front	POST. Rear
APRILIA	RS 250	250	1995	1996	X	
BETA	JONATHAN 125	125	1999		X	
BETA	350 JONATHAN	350	2002		X	
BETA	MOTARD 350 4.0	350	2004		X	
BETA	EURO 350	350	1999		X	
BETA	350 M4	350	2006		X	
BIMOTA	FURANO		1992		X	
BIMOTA	1D TESI		1993		X	
BIMOTA	YB7 400	400	1989		X	
BIMOTA	V DUE 500	500	1997		X	
BIMOTA	BELLARIA 600 SPORT	600	1991		X	
BIMOTA	YB9 600 SRI	600	1997		X	
BIMOTA	SUPERMONO 650	650	1997		X	
BIMOTA	SB7 750	750	1996		X	
BIMOTA	YB4 750	750	1989		X	
BIMOTA	TESI 851 1D	851	1991		X	
BIMOTA	MANTRA 900	900	1997		X	
BIMOTA	DB2 900	900	1992		X	
BIMOTA	TESI 906 1D	904	1991		X	

AGPA32						
MARCA Brand	MODELLO Model	CC	DA From	A To	ANT. Front	POST. Rear
BIMOTA	2D 1000 TESI	1000	2004	2006	X	
BIMOTA	YB11 1000	1000	1997		X	
BIMOTA	YB 6 1000	1000	1989		X	
BIMOTA	YB 8 1000	1000	1990		X	
BIMOTA	DIECI 1002	1002	1991		X	
BIMOTA	SB 6 1100	1100	1997		X	
BORILE	B 500 CR, MT	500	2002		X	
BREMBO RACING CALIPERS	BILLET 20.4756.52/62, RACING					
BREMBO RACING CALIPERS	GOLDLINE SINGLE PIN 20.5165.55/65, ROAD					
CAGIVA	MITO 125 EDDY	125	1993		X	
CAGIVA	MITO 125 EV	125	1994	2003	X	
CAGIVA	MITO 125 EURO 2	125	2005		X	
CAGIVA	MITO 2 125 PRODUCTION RACER	125	1994		X	
CAGIVA	PLANET 125	125	1997		X	
CAGIVA	RAPTOR 125	125	2003		X	
CAGIVA	MITO 500	500	2007		X	
CAGIVA	RIVER 500	500	2000		X	
CAGIVA	SP 525 MITO	125	2008		X	
CAGIVA	125 MITO	125	1993		X	
CAGIVA	125 PLANET	125	1997		X	
CAGIVA	125 RAPTOR	125	2003		X	
CAGIVA	500 MITO	500	2007		X	
CAGIVA	500 RIVER	497	2000		X	
CAGIVA	600 RIVER	601	1994		X	
CANNONDALE	S 440	440	2003		X	
DUCATI	400 SS, JUNIOR	400	1992		X	
DUCATI	400 SS, NUDA	400	1992		X	
DUCATI	502 SINGLE	550	1993		X	
DUCATI	502 SUPERMONO	550	1993		X	
DUCATI	600 SS SUPERSPORT	600	1995		X	
DUCATI	M 600 MONSTER	600	1994	1999	X	
DUCATI	748 BIPOSTO	748	1995	1998	X	
DUCATI	748 SP	748	1995	1997	X	
DUCATI	750 MONSTER	750	1996	1999	X	
DUCATI	750 SS	750	1991		X	
DUCATI	750 SS SUPERSPORT	750	1995	1999	X	

PASTIGLIE BRAKE PADS

APPLICAZIONI PER CODICE PASTIGLIA / applications for pads code

ACCOSSATO

AGPA32						
MARCA Brand	**MODELLO** Model	**CC**	**DA** From	**A** To	**ANT.** Front	**POST.** Rear
DUCATI	750 SS, CARENARA	750	1992		X	
DUCATI	750 SS, NUDA	750	1992		X	
DUCATI	750 SUPER SPORT	750	1992	1994	X	
DUCATI	851 STRADA	851	1989		X	
DUCATI	851 STRADA	851	1991		X	
DUCATI	851 SUPERBIKE	851	1990		X	
DUCATI	888 ROCHE REPLICA	888	1991		X	
DUCATI	888 SP V	888	1993		X	
DUCATI	888 SP4	888	1992		X	
DUCATI	888 SPO	888			X	
DUCATI	888 SPS	888	1992		X	
DUCATI	888 STRADA	888	1993		X	
DUCATI	888 SUPERBIKE	888	1993		X	
DUCATI	900 FE	900	1997		X	
DUCATI	900 M, IL MONSTER	900	1993	1999	X	
DUCATI	900 SL	900	1992		X	
DUCATI	900 SS	900	1990	1994	X	
DUCATI	900 SS SUPERSPORT	900	1995	1997	X	
DUCATI	900 SSR	900	1992		X	
DUCATI	907 900 I. E.	904	1992		X	
DUCATI	M 900 STREET MONSTER	900	1994	1999	X	
DUCATI	916 BIPOSTO	916	1994		X	
FANTIC	TZ 125 SM	125	2012		X	
GASGAS	SM 125	125	2002		X	
GASGAS	SM 250	250	2002		X	
GASGAS	SM 400 FSE	400	2002		X	
GASGAS	SM 450 FSE	450	2003	2006	X	
GASGAS	SM 450 FSR	450	2007		X	
GILERA	350 SATURNO BIALBERO	350			X	
GILERA	500 SATURNO BIALBERO	500	1990		X	
GILERA	500 SATURNO PIUMA	500	1990		X	
HONDA	RS 125	125	1995		X	
HONDA	RS 250 R	250	1993		X	
HUSQVARNA	SM 400 R	400	2002		X	
HUSQVARNA	SM 450 R	450	2003	2004	X	
HUSQVARNA	SM 570 R	570	2001		X	
INDIAN	1700 CHIEF BLACKHAWK	1700	2011	2013	X	
INDIAN	1700 CHIEF BOMBER	1700	2010	2013	X	
INDIAN	1700 CHIEF CLASSIC	1700	2010	2013	X	
INDIAN	1700 CHIEF DARK HORSE	1700	2010	2013	X	
INDIAN	1700 CHIEF DELUXE	1700	2009	2013	X	
INDIAN	1700 CHIEF ROADMASTER	1700	2009	2013	X	
INDIAN	1700 CHIEF STANDARD	1700	2009	2013	X	
INDIAN	1700 CHIEF VINTAGE	1700	2009	2013	X	
ITALJET	900 GRIFON	900	2000		X	
J. J. COBAS	TR1		1985		X	
KTM	125 STING	125	1999		X	
KTM	SX 450 SM FACTORY REPLICA	450	2004		X	
KTM	600 DUKE	600	1993	1995	X	
KTM	620 DUKE	620	1996	1998	X	
KTM	640 DUKE	640	1999	2002	X	
KTM	LC4 640 SUPERMOTO	625	2003		X	
KTM	LC4 660 SM FACTORY REPLICA	654	2002		X	
KTM	SMC 660 SUPERMOTO	654	2003		X	
LAVERDA	650	650	1992		X	
LAVERDA	668	668	1996		X	
LAVERDA	668 GHOST, DIAMANTE	668	1997		X	
LAVERDA	750 CUP	750	1998		X	

AGPA32						
MARCA Brand	**MODELLO** Model	**CC**	**DA** From	**A** To	**ANT.** Front	**POST.** Rear
LAVERDA	750 DIAMANTE	750	1997		X	
LAVERDA	750 GHOST STRIKE	750	1997		X	
LAVERDA	750 S FORMULA	750	1997		X	
LAVERDA	750 S, S CARENATA	750	1997		X	
LAVERDA	750 SPORT 99- HF	750	1999		X	
LAVERDA	750 STRIKE/BLACK	750	1999		X	
LAVERDA	STRIKE		1999		X	
LAVERDA	750 T8	750	1998		X	
LAVERDA	TTS 800	800	1999		X	
LAVERDA	JOTA 1000	1000	1995		X	
MOTO GUZZI	IPPOGRIFO		1997		X	
MOTO GUZZI	1000 DAYTONA	1000	1991		X	
MOTO GUZZI	1000 QUOTA	1000	1992		X	
MOTO GUZZI	RS 1000 DAYTONA	1000	1997		X	
MOTO GUZZI	V10 1000 CENTAURO	1000	1996		X	
MOTO GUZZI	1100 CALIFORNIA JACKAL	1100	2000		X	
MOTO GUZZI	1100 CALIFORNIA JACKAL BASIC	1100	2000		X	
MOTO GUZZI	1100 CALIFORNIA SPECIAL	1100	1999	2000	X	
MOTO GUZZI	1100 SPORT	1100	1996		X	
MOTO GUZZI	EV 1100 CALIFORNIA	1100	1997	2000	X	
MOTO GUZZI	V11 1100 SPORT	1100	1997	2000	X	
MZ	660 (MUZ) SKORPION CUP	660	1999		X	
MZ	660 (MUZ) SKORPION REPLICA	660	1997		X	
MZ	660 (MUZ) SKORPION SPORT	660	1995		X	
MZ	660 (MUZ) SKORPION TOUR	660	1995		X	
MZ	660 (MUZ) SKORPION TRAVELLER	660	1999		X	
NORTON	F-1		1990		X	
NORTON	TT		1992		X	
PGO	250 G-MAX	250	2006		X	
REVTECH	WILWOOD CALIPER FRONT/REAR				X	
SACHS	125 X-ROAD	125	2005		X	
SACHS	XTC 125	125	1999		X	
SACHS	XTC-N 125	125	1999		X	
SACHS	500 MADASS	500	2005		X	
SACHS	650 ROADSTER V1.6	650	2001		X	
SACHS	800 B-805	800	2002		X	
SACHS	800 ROADSTER V2	800	2000		X	
SACHS	800 S-805	800	2003		X	
TM	SMR 125	125	2005		X	
TM	SMF 400 F	400	2002		X	
TM	SMR 400 F	400	2003		X	
TM	SMR 450 F	450	2004		X	
TM	SMX 450 F	450	2003		X	
TM	SMR 530 F	530	2003		X	
TM	SMX 600 F	600	2003		X	
VOR	SM 400	400	2002		X	
VOR	SM 450	450	2002		X	
VOR	500 492 SUPER MOTARD	500	2000	2001	X	
VOR	SM 530	528	2002		X	
VOXAN	1000 CAFE RACER	1000	2001		X	
VOXAN	1000 ROADSTER	1000	2001		X	
YAMAHA	TZR 250 R	250	1994		X	
YAMAHA	SZR 660	660	1996		X	

ACCOSSATO

PASTIGLIE BRAKE PADS

APPLICAZIONI PER CODICE PASTIGLIA / applications for pads code

MESCOLA ORGANICA E SINTERIZZATA organic and sintered compound
OR / ST

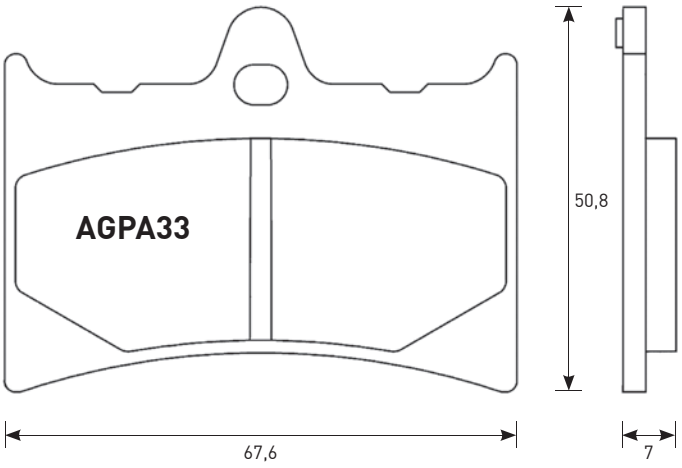

CROSS REFERENCE	
EBC	FA126
OGNIBENE	173
BRAKING	726
NEWFREN	.FD.0115
BREMBO	07GR56
FERODO	FDB498
CL	2398
SBS	601

EQUIVALENT OE #	
OEM Aprilia	8113638

AGPA33						
MARCA Brand	MODELLO Model	CC	DA From	A To	ANT. Front	POST. Rear
ALFER	MC 125	125	1988		X	
ALFER	GR 250 ENDURO	250	1988		X	
ALFER	MC 250	250	1988		X	
ALFER	GR 300 ENDURO	300	1988		X	
APRILIA	125 SPORT PRO	125	1992		X	
APRILIA	125 TUONO	125	2004		X	

AGPA33						
MARCA Brand	MODELLO Model	CC	DA From	A To	ANT. Front	POST. Rear
APRILIA	AF1 125 EUROPA, FUTURA	125	1990	1991	X	
APRILIA	AF1 125 REPLICA, SINTESI	125	1989	1991	X	
APRILIA	RS 125	125	1999	2005	X	
APRILIA	RS 125 , EXTREMA	125	1993	1998	X	
APRILIA	RS 125 PISTA	125	2005		X	
APRILIA	AF1 250 REPLICA	250	1990		X	
ASPES	125 SINTESI	125	1988		X	
ATK	ATK 250 CC,MX	250	1991	1992	X	
ATK	ATK 350 ES CC,MX, STD	350	1991	1992	X	
ATK	ATK 406 CC,MX	406	1991	1992	X	
ATK	ATK 560	560	1989	1991	X	
ATK	ATK 604	604	1991		X	
ATK	ATK 604 ES CC,MX, STD	604	1991	1992	X	
ATK	ATK 604 QUADRACER	604	1990		X	
BENELLI	50 DEVIL	50	1992		X	
BENELLI	50 SPRING	50	1992		X	
BENELLI	125 JARNO	125	1989		X	
BENELLI	BX 125	125	1989		X	
GILERA	SP 01	125	1990		X	
GILERA	125 CRONO	125	1992		X	
GILERA	125 FREESTYLE	125	1992		X	
GILERA	125 MX1, MRX, SP01	125			X	
GILERA	125 SP02	125	1990		X	
GILERA	CX 125	125	1991		X	
GILERA	600 NORDWEST	600	1991		X	
KTM	MX 250 VC, ENDURO	250	1987		X	X
KTM	EXC 350	350	1987		X	X
KTM	GS 350	350	1987		X	X
KTM	MX 350	350	1987		X	X
KTM	400 ENDURO	400	1987		X	X
KTM	MX 500	500	1987		X	X
KTM	LC4 550	550	1987		X	X
KTM	MX 550	550	1987		X	X
KTM	EXC 600	600	1987		X	X
KTM	LC4 600	600	1988		X	X
KTM	LC4 600 ENDURO	600	1988		X	X
KTM	MC 600	600	1988		X	X
KTM	MX 600	600	1987		X	X

MESCOLA ORGANICA organic compound
OR

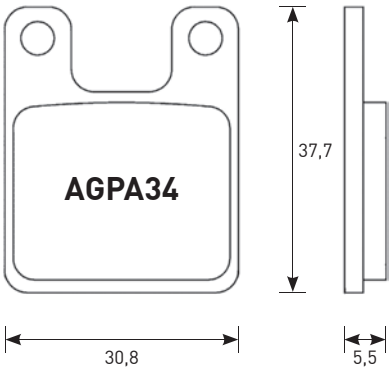

CROSS REFERENCE	
EBC	FA352
NEWFREN	.FD.0252
BREMBO	07GR70

EQUIVALENT OE #	
	144750008

AGPA34						
MARCA Brand	MODELLO Model	CC	DA From	A To	ANT. Front	POST. Rear
POLINI	CROSS 50	50	1999		X	X
RACING CALIPERS	MINIMOTO TIPO CS RACING				X	
RACING CALIPERS	MINIMOTO TIPO GRC				X	
RACING CALIPERS	MINIMOTO TIPO POLINI				X	

PASTIGLIE BRAKE PADS

APPLICAZIONI PER CODICE PASTIGLIA / applications for pads code

MESCOLA SINTERIZZATA, ZXC, EV1 E EV2 sintered, zxc, ev1 and ev2 compounds
ST / ZXC / EV1 / EV2

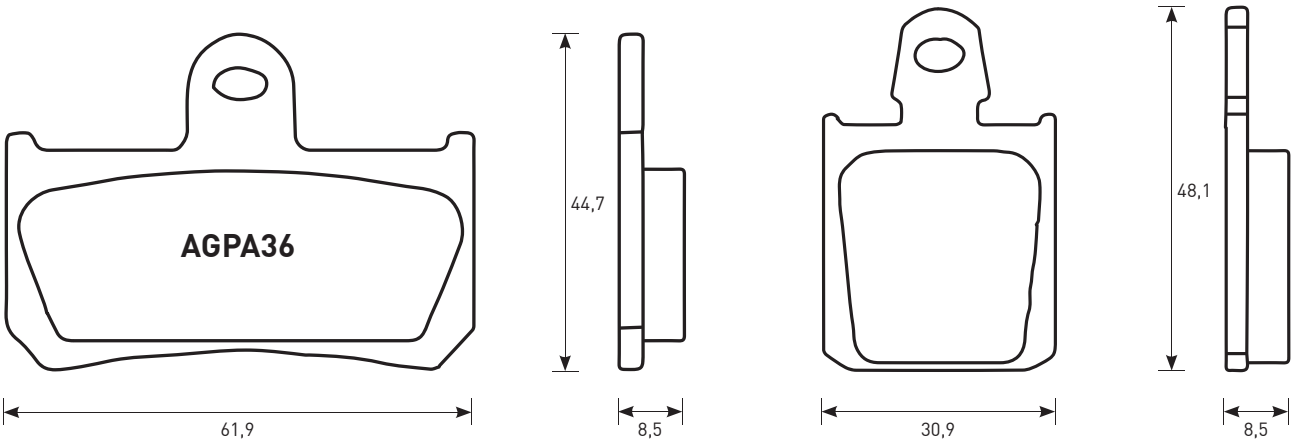

CROSS REFERENCE	
EBC	**FA442/4**
OGNIBENE	**321**
BRAKING	**928**
NEWFREN	**.FD.0407**
BREMBO	**07YA46**
FERODO	**FDB2217**
CL	**1180**
SBS	**839**

EQUIVALENT OE #	
OEM Yamaha	**4C8 W0045 00**

AGPA36						
MARCA Brand	**MODELLO** Model	**CC**	**DA** From	**A** To	**ANT.** Front	**POST.** Rear
YAMAHA	**YZF 1000 R1 (Rad.cal)(4-pad)**	**1000**	**2007**	**2014**	**X**	
YAMAHA	**MT-01 1700 (Rad.cal)**	**1700**	**2007**		**X**	
YAMAHA	**VMX 1700 V-MAX**	**1700**	**2009**		**X**	

MESCOLA SINTERIZZATA, ZXC, EV1 E EV2 sintered, zxc, ev1 and ev2 compounds
ST / ZXC / EV1 / EV2

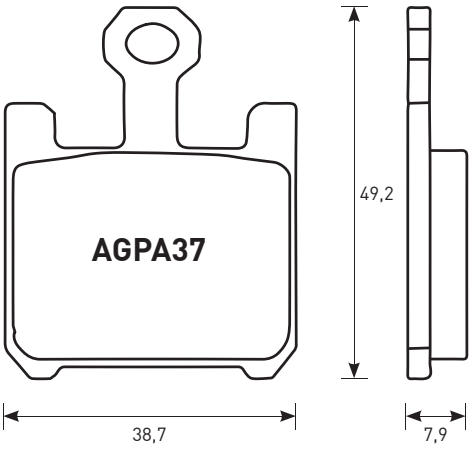

CROSS REFERENCE	
EBC	**FA369/4**
OGNIBENE	**300**
BRAKING	**893**
NEWFREN	**.FD.0352**
BREMBO	**07SU26**
FERODO	**FDB2164**
CL	**1110**
SBS	**788**

EQUIVALENT OE #	
OEM Kawasaki	**43082 0021**
OEM Kawasaki	**43082 0031**
OEM Kawasaki	**43082 0058**
OEM Kawasaki	**43082 1293**
OEM Suzuki	**59100 18850**

AGPA37						
MARCA Brand	**MODELLO** Model	**CC**	**DA** From	**A** To	**ANT.** Front	**POST.** Rear
DERBI	**MULHACEN 659**	**659**	**2005**		**X**	
KAWASAKI	**ZX 6RR 600 NINJA (Rad.cal)**	**600**	**2003**	**2006**	**X**	
KAWASAKI	**ZX 6R 636 NINJA (Rad.cal)**	**636**	**2003**	**2006**	**X**	
KAWASAKI	**ZX 10R 1000 NINJA (Rad.cal)**	**1000**	**2004**	**2007**	**X**	
KAWASAKI	**ZX 12R 1200 NINJA (Rad.cal)**	**1200**	**2004**		**X**	
KAWASAKI	**VN 1600 MEAN STREAK**	**1600**	**2005**		**X**	
SUZUKI	**GSX R 1000 (Rad.cal)**	**1000**	**2003**		**X**	
SUZUKI	**M 1600 INTRUDER**	**1600**	**2005**		**X**	

ACCOSSATO

PASTIGLIE BRAKE PADS

APPLICAZIONI PER CODICE PASTIGLIA / applications for pads code

MESCOLA SINTERIZZATA, EV1 E EV2 sintered, ev1 and ev2 compounds
ST / EV1 / EV2

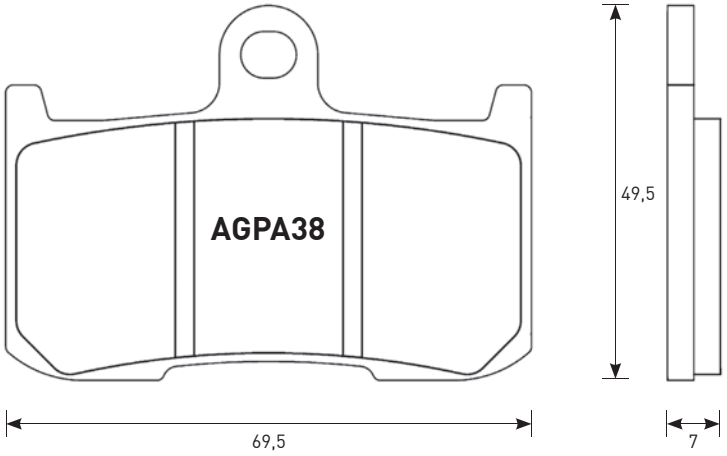

CROSS REFERENCE	
EBC	FA347
OGNIBENE	287
BRAKING	906
NEWFREN	.FD.0351
BREMBO	07KA23
FERODO	FDB2158
CL	1083

EQUIVALENT OE #	
OEM Kawasaki	43082 0002
OEM Kawasaki	43082 1290
OEM Suzuki	59100 23830
OEM Suzuki	59100 29840

AGPA38						
MARCA Brand	MODELLO Model	CC	DA From	A To	ANT. Front	POST. Rear
INDIAN	1800 CHIEF CLASSIC	1800	2014		X	
INDIAN	1800 CHIEF VINTAGE	1800	2014		X	
INDIAN	1800 CHIEFTAIN	1800	2014		X	
INDIAN	1800 ROADMASTER	1800	2015		X	
KAWASAKI	Z 800	800	2013	2014	X	
KAWASAKI	Z 800 E ABS	800	2013	2014	X	
KAWASAKI	ZX-9R 900 NINJA	900	2002		X	
KAWASAKI	Z 1000	1000	2003	2006	X	
MORIWAKI	MD 250	250	2009		X	
SUZUKI	1340 B-KING	1340	2008		X	
TRIUMPH	675 DAYTONA (RAD.CAL)	675	2006	2008	X	
TRIUMPH	675 STREET TRIPLE R	675	2009	2012	X	
TRIUMPH	675 STREET TRIPLE R	675	2013		X	
TRIUMPH	675 STREET TRIPLE RX	675	2015		X	
TRIUMPH	1050 SPEED TRIPLE (RAD.CAL)	1050	2005	2007	X	
TRIUMPH	1050 TIGER	1050	2007		X	
TRIUMPH	1050 TIGER SE (RAD.CAL)	1050	2009		X	
TRIUMPH	1050 TIGER SPORT	1050	2015		X	

AGPA38						
MARCA Brand	MODELLO Model	CC	DA From	A To	ANT. Front	POST. Rear
VICTORY	1634 HAMMER	1634	2008		X	
VICTORY	1634 KINGPIN ALL MODELS	1634	2008		X	
VICTORY	1634 VEGAS	1634	2008		X	
VICTORY	1634 VEGAS 8-BALL	1634	2008		X	
VICTORY	1634 VEGAS JACKPOT	1634	2008		X	
VICTORY	1731 BOARDWALK	1731	2013		X	
VICTORY	1731 CROSS COUNTRY	1731	2010		X	
VICTORY	1731 CROSS COUNTRY 8-BALL	1731	2014		X	
VICTORY	1731 CROSS COUNTRY TOUR	1731	2012		X	
VICTORY	1731 CROSS ROADS	1731	2010		X	
VICTORY	1731 CROSS ROADS 8-BALL	1731	2014		X	
VICTORY	1731 CROSS ROADS CLASSIC	1731	2014		X	
VICTORY	1731 GUNNER	1731	2015		X	
VICTORY	1731 HAMMER	1731	2009		X	
VICTORY	1731 HAMMER 8-BALL	1731	2010		X	
VICTORY	1731 HAMMER S	1731	2009		X	
VICTORY	1731 HARD-BALL	1731	2012		X	
VICTORY	1731 HIGH-BALL 12- H.HS	1731	2012		X	
VICTORY	1731 JACKPOT	1731	2010		X	
VICTORY	1731 JUDGE	1731	2013		X	
VICTORY	1731 KINGPIN	1731	2010		X	
VICTORY	1731 KINGPIN 8-BALL	1731	2010		X	
VICTORY	1731 MAGNUM	1731	2015		X	
VICTORY	1731 VEGAS	1731	2010		X	
VICTORY	1731 VEGAS 8-BALL	1731	2010		X	
VICTORY	1731 VEGAS JACKPOT	1731	2009		X	

PASTIGLIE BRAKE PADS

APPLICAZIONI PER CODICE PASTIGLIA / applications for pads code

MESCOLA ORGANICA E SINTERIZZATA organic and sintered compound
OR / ST

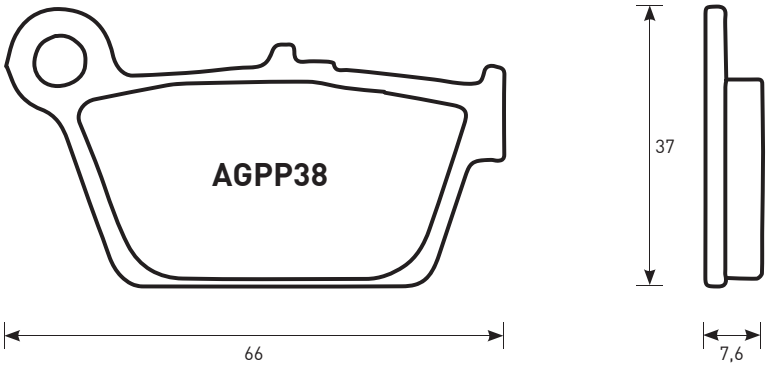

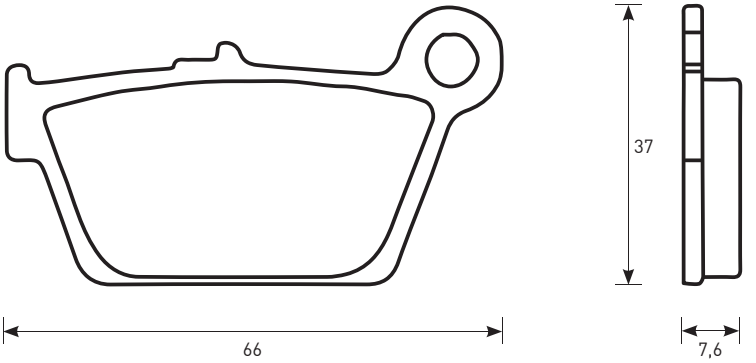

CROSS REFERENCE	
NEWFREN	**.FD.0349**
BREMBO	**07YA41**
FERODO	**FDB2162**
SBS	**861**

EQUIVALENT OE #	
OEM Beta	**/**

AGPP38						
MARCA Brand	**MODELLO** Model	**CC**	**DA** From	**A** To	**ANT.** Front	**POST.** Rear
BETA	**125 M4**	**125**	**2006**			**X**
BETA	**125 URBAN**	**125**	**2010**			**X**
BETA	**ALP 125 4-STROKE**	**125**	**2006**			**X**
BETA	**RR 125 ENDURO 4T**	**125**	**2010**			**X**
BETA	**RR 125 SUPERMOTARD**	**125**	**2008**			**X**
BETA	**200 URBAN**	**200**	**2010**			**X**
BETA	**ALP 200 4-STROKE**	**200**	**2006**			**X**
BETA	**350 M4**	**350**	**2006**			**X**
BETA	**ALP 350 4.0**	**350**	**2006**			**X**

ACCOSSATO

PASTIGLIE BRAKE PADS

APPLICAZIONI PER CODICE PASTIGLIA / applications for pads code

MESCOLA SINTERIZZATA sintered compounds
ST

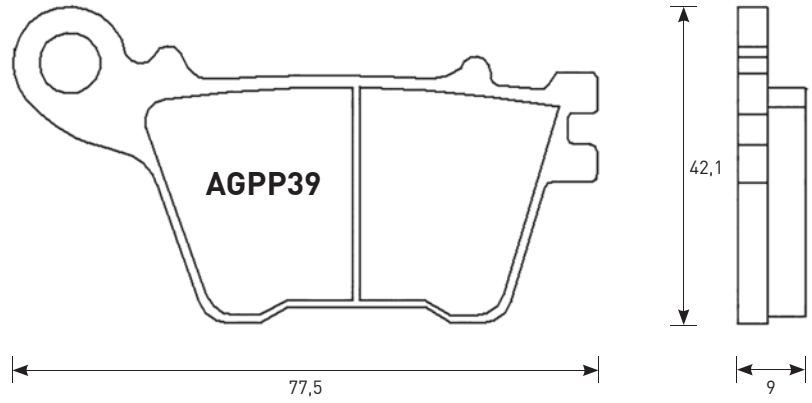

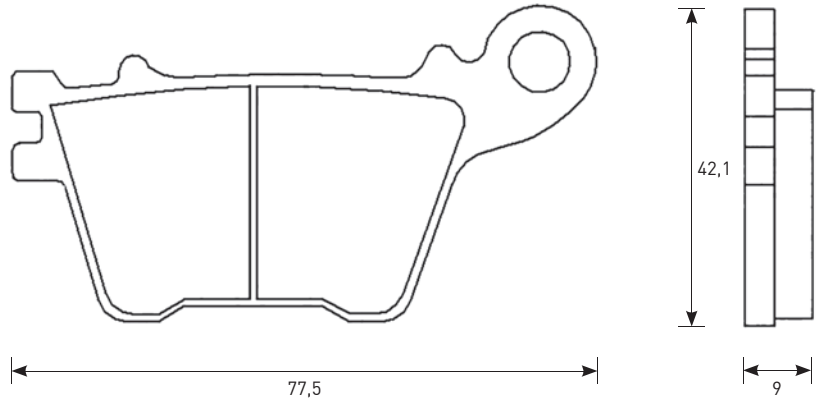

CROSS REFERENCE	
EBC	FA436
BRAKING	925
NEWFREN	.FD.0412
BREMBO	07HO59
FERODO	FDB2221
CL	1174
SBS	834

EQUIVALENT OE #	
OEM Honda	06435 MEL D21
OEM Honda	06435 MEL D22

AGPP39						
MARCA Brand	MODELLO Model	CC	DA From	A To	ANT. Front	POST. Rear
HONDA	CB 600 F7/F8/F9/FA/FB/FC	600	2007	2013		X
HONDA	CBR 600 FB/FC	600	2011	2013		X
HONDA	CBR 600 RR7/RR8/RR9/ RRA/RRB/RRC/RRD	600	2007	2013		X
HONDA	CBR 600 RA9/RAA/RAB/ RAC/RAD (C-ABS)	600	2009	2013		X
HONDA	CBR 600 RR HANNSPREE	600	2008			X
HONDA	CBR 1000 RR6/RR7/RR8/ RR9/RRA/RRB/RRC/RRD	1000	2006	2013		X
HONDA	CBR 1000 RA9/RAA/RAB/ RAC/RAD (C-ABS) FIREBLADE	1000	2009	2013		X
HONDA	RR-SPE FIREBLADE		2014	2015		X
KAWASAKI	ZX-6R EDF/EEF/EFF (NON ABS/636cc)	600	2013	2015		X

AGPP39						
MARCA Brand	MODELLO Model	CC	DA From	A To	ANT. Front	POST. Rear
KAWASAKI	ZX-6R FDF/FEF/FFF (ABS MODEL/636cc)	600	2013	2015		X
KAWASAKI	ZX-6R 30TH ANNIVERDASARY EDITION (ZX 636 EFFA/NON ABS/636cc)	600	2015			X
KAWASAKI	ZX-6R 30TH ANNIVERDASARY EDITION (ZX 636 FFFA/ABS/636cc)	600	2015			X
KAWASAKI	ZX 10 R ABS (ZX 1000 KBF/ KCF/KDF/KEF/KFF)	1000	2011	2015		X
KAWASAKI	ZX 10 R (ZX 1000 JBF/JCF/ JDF/JEF/JFF)	1000	2011	2015		X
KAWASAKI	ZX-10R 30Th ANNIVERSARY EDITION (ZX 1000 JFFA/NON ABS)	1000	2015			X
KAWASAKI	ZX-10R 30Th ANNIVERSARY EDITION (ZX 1000 KFFA/ABS)	1000	2015			X
SUZUKI	GSXR 600 L1/L2/L3/L4/L5	600	2011	2015		X
SUZUKI	GSXR 750 L1/L2/L3/L4/L5	750	2011	2015		X
SUZUKI	GSXR 1000 K9/L0/L1/L2/L3/ ZL3/L4/ZL4/L5/AL5	1000	2009	2015		X
SUZUKI	GSX-S 1000 AL5 (ABS)	1000	2015			X
SUZUKI	GSX-S 1000 FAL5 (ABS)	1000	2015			X
YAMAHA	YZF-R1	1000	2015			X
YAMAHA	YZF-R1M	1000	2015			X

PASTIGLIE BRAKE PADS

APPLICAZIONI PER CODICE PASTIGLIA / applications for pads code

MESCOLA ORGANICA E SINTERIZZATA organic and sintered compound
OR / ST

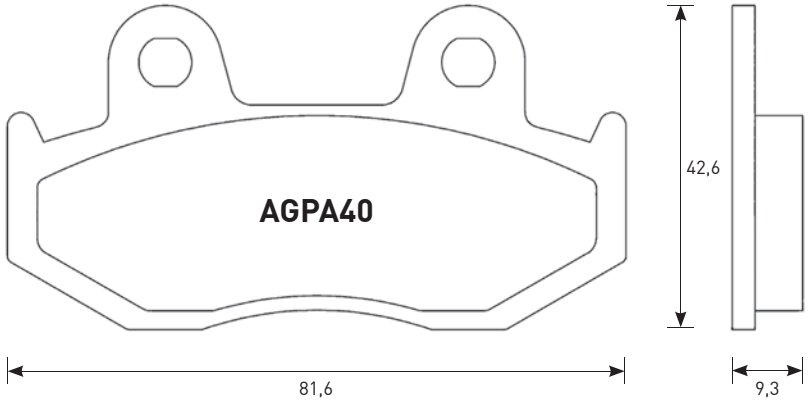

CROSS REFERENCE	
EBC	SFA323
OGNIBENE	159
BRAKING	887
NEWFREN	.FD.0304
BREMBO	7038
FERODO	FDB2119
CL	1164
SBS	125

EQUIVALENT OE #	
OEM Honda	06455 GCS 006
OEM Honda	06455 GCS 016

AGPA40						
MARCA Brand	MODELLO Model	CC	DA From	A To	ANT. Front	POST. Rear
HONDA	NHX 110	110	2008	2009	X	
HONDA	SCV 110 LEAD	1110	2008	2009	X	
HONDA	CH 125 SPACY	125	1994		X	
HONDA	PS 125 I	125	2007		X	
HONDA	SES 125 DYLAN	125	2002		X	
HONDA	SH 125	125	2002	2008	X	
HONDA	PS 150 I	150	2007		X	
HONDA	SES 150 DYLAN	150	2002		X	
HONDA	SH 150	150	2002	2008	X	
SUZUKI	250 SKY WAVE TYPE II	250	1998			X
SUZUKI	AN 250 BURGMAN	250	1998	2003		X
SUZUKI	AN 400 BURGMAN	400	1999	2000		X

MESCOLA ORGANICA E SINTERIZZATA organic and sintered compound
OR / ST

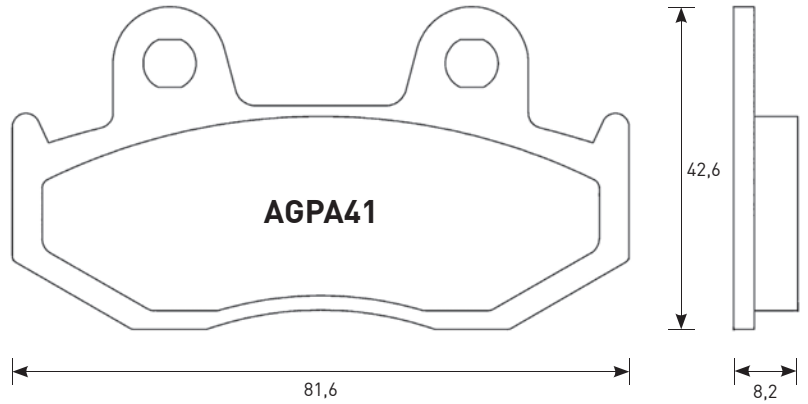

CROSS REFERENCE	
EBC	FA411
BRAKING	887
NEWFREN	.FD.0265
BREMBO	07HO15
FERODO	FDB2086
CL	3074
SBS	174

EQUIVALENT OE #	
OEM Suzuki	69600 14840
OEM Suzuki	69100 14840
OEM Suzuki	69100 14850

AGPA41						
MARCA Brand	MODELLO Model	CC	DA From	A To	ANT. Front	POST. Rear
KAWASAKI	SC 250 EPSILON	250	2002		X	
SUZUKI	AN 250 BURGMAN	250	2004		X	
SUZUKI	AN 400 BURGMAN	400	2001		X	

ACCOSSATO

PASTIGLIE BRAKE PADS

APPLICAZIONI PER CODICE PASTIGLIA / applications for pads code

MESCOLA ORGANICA E SINTERIZZATA organic and sintered compound
OR / ST

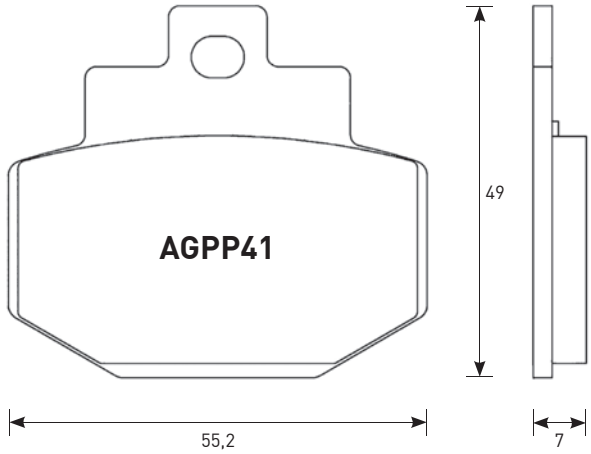

CROSS REFERENCE	
EBC	SFA321
BRAKING	871
NEWFREN	.FD.0298
BREMBO	7047
FERODO	FDB2115
CL	3054
SBS	772/166

EQUIVALENT OE #	
OEM Piaggio	497002
OEM Piaggio	647161

AGPP41						
MARCA Brand	MODELLO Model	CC	DA From	A To	ANT. Front	POST. Rear
BENELLI	ADIVA 125	125	2000			X
BENELLI	ADIVA 150	150	2000			X
GILERA	ST 125 RUNNER	125	2008	2011		X
GILERA	VX 125 RUNNER 4T (GRIMECA CAL.)	125	2001			X
GILERA	VX 125 RUNNER 4T (HENGTONG CAL.)	125	2001			X
GILERA	VXR 180 RUNNER 4T (GRIMECA CAL.)	180	2001			X
GILERA	VXR 180 RUNNER 4T (HENGTONG CAL.)	180	2001			X

AGPP41						
MARCA Brand	MODELLO Model	CC	DA From	A To	ANT. Front	POST. Rear
GILERA	ST 200 RUNNER	200	2008			X
GILERA	VXR 200 RUNNER 4T (GRIMECA CAL.)	200	2001			X
GILERA	VXR 200 RUNNER 4T (HENGTONG CAL.)	200	2001			X
PIAGGIO	125 946	125	2014			X
PIAGGIO	GT 125 L	125	2004			X
PIAGGIO	GTS 125	125	2007			X
PIAGGIO	GTS 125 SUPER	125	2010	2013		X
PIAGGIO	GTS 125 SUPER I.E.	125	2015			X
PIAGGIO	GTS 125 SUPERSPORT	125	2013			X
PIAGGIO	GTV 125	125	2008			X
PIAGGIO	GTX 125 SUPERHEXAGON (GRIMECA CAL.) (11''WHEELS)	125	2000			X
PIAGGIO	GTX 125 SUPERHEXAGON (HENGTONG CAL.) (11''WHEELS)	125	2000			X
PIAGGIO	GTX 125 SUPERHEXAGON (HENGTONG CAL.) (12''WHEELS)	125	2001			X
PIAGGIO	GTX 180 SUPERHEXAGON (GRIMECA CAL.) (11''WHEELS)	180	2000			X
PIAGGIO	GTX 180 SUPERHEXAGON (HENGTONG CAL.) (11''WHEELS)	180	2000			X
PIAGGIO	GTX 180 SUPERHEXAGON (HENGTONG CAL.) (12''WHEELS)	180	2001			X
PIAGGIO	GT 200 L	200	2004			X
PIAGGIO	250 GT 60	250	2006			X
PIAGGIO	GTS 250 ABS	250	2006			X
PIAGGIO	GTV 250	250	2008			X
PIAGGIO	GTX 250 SUPER HEXAGON	250	2001			X
PIAGGIO	GTS 300 I.E.	300	2012			X
PIAGGIO	GTS 300 SUPER	300	2009			X
PIAGGIO	GTS 300 SUPER SPORT I.E.	300	2011			X
PIAGGIO	GTS 300 TOURING I.E.	300	2011	2012		X
PIAGGIO	GTV 300 I.E.	300	2011			X

PASTIGLIE BRAKE PADS

APPLICAZIONI PER CODICE PASTIGLIA / applications for pads code

MESCOLA ORGANICA E SINTERIZZATA organic and sintered compound
OR / ST

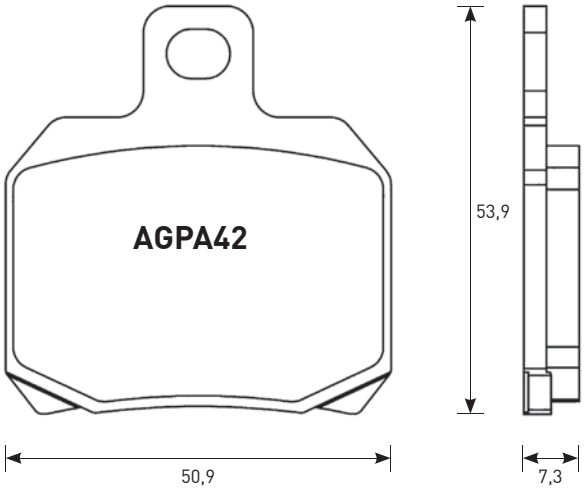

CROSS REFERENCE	
EBC	FA266
OGNIBENE	285
BRAKING	828
NEWFREN	.FD.0265
BREMBO	07BB20
FERODO	FDB2074
CL	2827/3057
SBS	157/730

EQUIVALENT OE #	
OEM Aprilia	8133920
OEM Aprilia	00H04704141
OEM Aprilia	8113898
OEM Aprilia	8113751
OEM Benelli	R44422001A
OEM Benelli	R310000127000
OEM Cagiva	8000 95280
OEM Ducati	61340731A
OEM Ducati	61340381A
OEM Ducati	61340211A
OEM KTM 690	13090000
OEM Moto Guzzi	31654681
OEM Moto Guzzi	316546810
OEM Moto Guzzi	31654681
OEM Piaggio	647077
OEM Piaggio	647076
OEM Piaggio	497394
OEM Yamaha	5NR F5811 00

AGPA42						
MARCA Brand	MODELLO Model	CC	DA From	A To	ANT. Front	POST. Rear
APRILIA	RS 50	50	2006		X	
APRILIA	BLUE MARLIN 1000	1000	2002			X
APRILIA	ETV 1000 CAPONORD RALLY RAID	1000	2001			X
APRILIA	ETV 1000 CAPONORD RALLY RAID	1000	2004			X
APRILIA	RSV 1000 FACTORY PISTA	1000	2004			X
APRILIA	RSV 1000 FALCO SL, R	1000	2000			X
APRILIA	RSV 1000 MILLE	1000	1997	2002		X
APRILIA	RSV 1000 MILLE NERA (RAD. CAL)	1000	2004			X
APRILIA	RSV 1000 MILLE R	1000	2000	2004		X
APRILIA	RSV 1000 MILLE R (RAD. CAL)	1000	2003			X
APRILIA	RSV 1000 MILLE R (RAD. CAL)	1000	2005			X
APRILIA	RSV 1000 MILLE R FACTORY (RAD. CAL)	1000	2004			X
APRILIA	RSV 1000 MILLE SP	1000	2000			X
APRILIA	RSV 1000 TUONO FIGHTER	1000	2003	2005		X

AGPA42						
MARCA Brand	MODELLO Model	CC	DA From	A To	ANT. Front	POST. Rear
APRILIA	RSV 1000 TUONO R	1000	2003			X
APRILIA	RSV 1000 TUONO R (RAD. CAL), ABS	1000	2004			X
APRILIA	RSV 1000 TUONO R FACTORY, ABS	1000	2006			X
APRILIA	RSV 1000 TUONO V4 R	1000	2011	2014		X
APRILIA	RSV4 1000, ABS	1000	2009			X
APRILIA	RSV4-R 1000, ABS	1000	2010			X
APRILIA	RSV-4RR 1000	1000	2015			X
APRILIA	RSV 1100 TUONO V4	1100	2015			X
BENELLI	BN 302	300	2014			X
BENELLI	BN 600	600	2013	2014		X
BENELLI	BN 600 GT	600	2014			X
BENELLI	756 CUE	756	2007	2010		X
BENELLI	899 TREK	899	2007			X
BENELLI	TNT 899	900	2007			X
BENELLI	TNT 899 CENTURY RACER	900	2011			X
BENELLI	900 TORNADO TRE	900	2003			X
BENELLI	900 TORNADO TRE RS (RAD. CAL)	900	2004			X
BENELLI	TNT 1130	1130	2005			X
BENELLI	TNT 1130 CAFE RACER	1130	2005			X
BENELLI	TNT 1130 CENTURY RACER	1130	2011			X
BENELLI	TNT 1130 OFFICINE	1130	2007			X
BENELLI	TNT 1130 SPORT	1130	2005			X
BENELLI	TNT 1130 TITANIUM	1130	2005			X
BENELLI	TNT 1130 TREK	1130	2006			X
BENELLI	TNT 1130 TREK AMAZONAS	1130	2007			X
BIMOTA	BB3 1000	1000	2014			X
BIMOTA	DB5 1000 MILLE (RAD. CAL)	1000	2005	2011		X
BIMOTA	DB5 1000 S (RAD. CAL)	1000	2007	2011		X
BIMOTA	DB6 1000 DELIRIO (RAD. CAL)	1000	2007			X
BIMOTA	DB10 1078 BIMOTARD	1078	2012			X
BIMOTA	DB5 1078 RE	1078	2012			X
BIMOTA	DB7 1098 (RAD. CAL)	1098	2008			X
BIMOTA	3D 1100 TESI (RAD. CAL)	1100	2007			X
BIMOTA	DB6R 1100 DELIRIO (RAD. CAL)	1100	2008			X
BIMOTA	DB8 1198 (RAD. CAL)	1198	2010			X
BIMOTA	DB11 1200 VLX (RAD. CAL)	1200	2013			X
BIMOTA	DB12 1200	1200	2012			X
BIMOTA	DB9 1200 BRIVIDO	1200	2012			X
BOMBARDIER	500 TRAXTER 4X4	500	1999	2000		X
BREMBO RACING CALIPERS	GOLDLINE 20.6951.50, ROAD					
BREMBO RACING CALIPERS	SUPERSPORT 120A44110, P2 34					
CAGIVA	650 RAPTOR	650	2001			X
CAGIVA	650 V-RAPTOR	650	2001			X
CAGIVA	1000 RAPTOR	1000	2000			X
CAGIVA	1000 V-RAPTOR	1000	2000			X
CAGIVA	1000 X3 RAPTOR	1000	2004			X
CAGIVA	1000 X-RAPTOR	1000	2003			X
CAGIVA	1000 XTRA RAPTOR	1000	2002			X
CPI	50 GTR	50	2003		X	
CPI	125 X-LARGE	125	2002		X	X
CPI	200 X-LARGE	200	2002		X	X
DERBI	GP1 50	50	2005		X	
DERBI	GPR 50 NUDE	50	2004		X	
DERBI	GPR 50 RACING	50	2004		X	
DERBI	50 SENDA DRD PRO SM	50	2005		X	

ACCOSSATO

PASTIGLIE BRAKE PADS

APPLICAZIONI PER CODICE PASTIGLIA / applications for pads code

AGPA42						
MARCA Brand	MODELLO Model	CC	DA From	A To	ANT. Front	POST. Rear
DERBI	GP1 125	125	2005		X	
DERBI	125 SENDA DRD SM	125	2010		X	
DERBI	GP1 250	250	2005		X	
DERBI	659 MULHACEN	659	2005	2007		X
DERBI	659 MULHACEN CAFE	659	2008			X
DUCATI	620 MULTISTRADA	620	2005			X
DUCATI	620 MULTISTRADA DARK	620	2005			X
DUCATI	620 SPORT	620	2003			X
DUCATI	696 MONSTER (RAD. CAL)	696	2008	2012		X
DUCATI	749 S	748	2003			X
DUCATI	749 R (RAD. CAL)	748	2004			X
DUCATI	750 SPORT	750	2000			X
DUCATI	750 SUPER SPORT	750	2000			X
DUCATI	795 MONSTER	795	2012			X
DUCATI	796 HYPERMOTARD	800	2010	2012		X
DUCATI	796 MONSTER (RAD. CAL)	96	2011	2014		X
DUCATI	800 HYPERMOTARD	800	2013			X
DUCATI	800 HYPERSTRADA	800	2013			X
DUCATI	800 SPORT	800	2003			X
DUCATI	800 SUPERSPORT	800	2003			X
DUCATI	821 MONSTER	821	2015			X
DUCATI	821 MONSTER DARK	821	2015			X
DUCATI	848 (RAD. CAL)	848	2008	2010		X
DUCATI	848 EVO (RAD. CAL)	848	2011			X
DUCATI	848 STREETFIGHTER	848	2012			X
DUCATI	848 STREETFIGHTER S	848	2012			X
DUCATI	899 PANIGALE	898	2014			X
DUCATI	900 SUPER SPORT	900	1998			X
DUCATI	916 SPORT TOURING 4	916	1999	2001		X
DUCATI	944 SPORT TOURING	944	1998			X
DUCATI	944 ST2	944	1997			X
DUCATI	D16RR 990 DESMOSEDICI RR	990	2007			X
DUCATI	992 ST3	992	2004			X
DUCATI	992 ST3S ABS	992	2006			X
DUCATI	996 ST4S	996	2002			X
DUCATI	996 ST4S ABS	996	2003			X
DUCATI	998 MONSTER S4RS	998	2006			X
DUCATI	999 S	999	2003			X
DUCATI	999 MONSTER S4R	999	2007			X
DUCATI	999 MONSTER S4RS	999	2007			X
DUCATI	999 R (RAD. CAL)	999	2003			X
DUCATI	1000 HYPERMOTARD	1000	2006			X
DUCATI	1000 MONSTER S2R	1000	2006			X
DUCATI	1000 MULTISTRADA	1000	2007			X
DUCATI	1000 MULTISTRADA DS	1000	2003	2006		X
DUCATI	1000 MULTISTRADA S DS	1000	2005			X
DUCATI	1000 SUPERSPORT DS	1000	2003			X
DUCATI	1098 (RAD. CAL)	1100	2007	2008		X
DUCATI	1098 R (RAD. CAL)	1100	2008			X
DUCATI	1098 R BAYLISS LE (RAD. CAL)	1100	2009			X
DUCATI	1098 S (RAD. CAL)	1100	2007	2008		X
DUCATI	1098 STREETFIGHTER (RAD. CAL)	1100	2009			X
DUCATI	1098 STREETFIGHTER S (RAD. CAL)	1100	2009			X
DUCATI	1100 HYPERMOTARD	1100	2007			X
DUCATI	1100 HYPERMOTARD EVO	1100	2010			X
DUCATI	1100 HYPERMOTARD EVO SP	1100	2010			X
DUCATI	1100 MONSTER (RAD. CAL)	1100	2009			X
DUCATI	1100 MONSTER EVO (RAD. CAL)	1100	2011			X

AGPA42						
MARCA Brand	MODELLO Model	CC	DA From	A To	ANT. Front	POST. Rear
DUCATI	1100 MONSTER S (RAD. CAL)	1100	2009			X
DUCATI	1100 MULTISTRADA	1100	2007	2009		X
DUCATI	1100 MULTISTRADA S	1100	2007	2009		X
DUCATI	1198 (RAD. CAL)	1200	2009			X
DUCATI	1198 S (RAD. CAL)	1200	2009			X
DUCATI	1198 SP (RAD. CAL)	1200	2011			X
DUCATI	1199 PANIGALE	1200	2012	2014		X
DUCATI	1199 PANIGALE R	1200	2013			X
DUCATI	1199 PANIGALE S	1200	2012	2014		X
DUCATI	1199 SUPERLEGGERA	1200	2014			X
DUCATI	1200 MONSTER	1200	2014			X
DUCATI	1200 MONSTER S	1200	2014			X
DUCATI	1200 MULTISTRADA	1200	2010	2014		X
DUCATI	1200 MULTISTRADA S GT	1200	2013	2014		X
DUCATI	1200 MULTISTRADA S PIKES PEAK	1200	2011	2014		X
DUCATI	1200 MULTISTRADA S SPORT	1200	2010	2014		X
DUCATI	1200 MULTISTRADA S TOURING	1200	2010	2014		X
DUCATI	1299 PANIGALE	1299	2015			X
DUCATI	1299 PANIGALE S	1299	2015			X
GILERA	500 NEXUS	500	2004			X
GILERA	600 SUPERSPORT	600	2002			X
KAWASAKI	1000 H2 NINJA	1000	2015			X
KAWASAKI	1000 H2R NINJA	1000	2015			X
KTM	RC8 1190	1195	2008			X
KTM	RC8 1190 R	1195	2009			X
KTM	RC8 1190 R TRACK	1195	2011			X
KTM	1290 SUPER DUKE R	1301	2014			X
LAVERDA	TTS 800	800	1999			X
LAVERDA	SFC 1000 (RAD. CAL)	1000	2004			X
MALAGUTI	125 MADISON 3	125	2008			X
MALAGUTI	250 MADISON 3 I.E.	250	2008			X
MALAGUTI	GT 500 SPIDERMAX	500	2004			X
MALAGUTI	RS 500 SPIDERMAX	500	2009			X
MBK	125 SKYCRUISER	125	2006			X
MBK	125 THUNDER	125	2001			X
MBK	YP 125 SKYLINER	125	2001			X
MBK	150 SKYLINER	150	2001			X
MBK	XQ 150 THUNDER	150	2002			X
MBK	180 SKYLINER	180	2004			X
MONDIAL	1000 EVO (RAD. CAL)	1000	2004			X
MONDIAL	1000 PIEGA	1000	2003			X
MONDIAL	1000 RZ NUDA	1000	2004			X
MONDIAL	1000 STARFIGHTER (RAD. CAL)	1000	2004			X
MOTO GUZZI	750 BREVA	750	2003			X
MOTO GUZZI	750 NEVADA CLASSIC I.E.	750	2006			X
MOTO GUZZI	750 NEVADA, NEVADA CLUB	750	2003			X
MOTO GUZZI	V7 750 CAFE CLASSIC	750	2010			X
MOTO GUZZI	V7 750 CLASSIC	750	2009	2012		X
MOTO GUZZI	V7 750 CLUBMAN RACER	750	2010			X
MOTO GUZZI	V7 750 RACER	750	2011			X
MOTO GUZZI	V 1100 BREVA	1100	2004			X
MOTO GUZZI	1200 MGS-01 CORSA (RAD. CAL)	1200	2005			X
MOTO GUZZI	1200 SPORT 4V	1200	2009	2011		X
MOTO MORINI	1200 9 1/2	1200	2006			X
MOTO MORINI	1200 CORSARO	1200	2006			X
MOTO MORINI	1200 SPORT	1200	2008			X
MV AGUSTA	675 BRUTALE	675	2012			X

PASTIGLIE BRAKE PADS

APPLICAZIONI PER CODICE PASTIGLIA / applications for pads code

AGPA42						
MARCA Brand	**MODELLO** Model	**CC**	**DA** From	**A** To	**ANT.** Front	**POST.** Rear
MV AGUSTA	675 F3	675	2013	2015		X
MV AGUSTA	800 BRUTALE	800	2013			X
MV AGUSTA	800 BRUTALE DRAGSTER	800	2015			X
MV AGUSTA	800 BRUTALE DRAGSTER RR	800	2015			X
MV AGUSTA	800 BRUTALE RR	800	2015			X
MV AGUSTA	800 RIVALE	800	2013			X
MV AGUSTA	800 STRADALE	800	2015			X
MV AGUSTA	800 TURISMO VELOCE	800	2014			X
MV AGUSTA	800 TURISMO VELOCE LUSSO	8000	2014			X
NORTON	961 COMMANDO CAFE RACER	961	2011			X
NORTON	961 COMMANDO SE	961	2010	2012		X
NORTON	961 COMMANDO SF	961	2013			X
NORTON	961 COMMANDO SF SPORT	961	2011			X
PEUGEOT	50 CITYSTAR	50	2014			X
PEUGEOT	50 SPEEDFIGHT 3 (LC)	50	2010			X
PEUGEOT	50 SPEEDFIGHT 3 RS (LC)	50	2010			X
PEUGEOT	125 ACTIVE	125	2013			X
PEUGEOT	125 CITYSTAR	125	2011			X
PEUGEOT	200 CITYSTAR	200	2013			X
PEUGEOT	500 SATELIS	500	2006		X	X
PIAGGIO	125 X8	125	2004			X
PIAGGIO	125 X9	125	2001	2003	X	X
PIAGGIO	125 X9 EVOLUTION LEFT/REAR	125	2006			X
PIAGGIO	125 X9 LEFT/REAR	125	2004			X
PIAGGIO	180 X9	180	2002		X	X
PIAGGIO	200 X8	200	2004			X
PIAGGIO	200 X9	200	2003		X	X
PIAGGIO	250 X9	250	2000	2004	X	X

AGPA42						
MARCA Brand	**MODELLO** Model	**CC**	**DA** From	**A** To	**ANT.** Front	**POST.** Rear
PIAGGIO	500 BEVERLY CRUISER	500	2008		X	X
PIAGGIO	500 X9	500	2001	2003	X	X
PIAGGIO	500 X9 EVOLUTION	500	2004			X
PIAGGIO	500 X9 EVOLUTION ABS	500	2004			X
PIAGGIO	BV 500	500	2006		X	X
RIEJU	50 TANGO	50	2008			X
RIEJU	50 TANGO	50	2010		X	
RIEJU	MRT 50 PRO	50	2009		X	X
RIEJU	MRT 50 PRO SUPERMOTARD	50	2009		X	X
RIEJU	SMX 50 PRO	50	2008		X	
RIEJU	125 MARATHON PRO	125	2009		X	
RIEJU	125 MARATHON PRO SUPERMOTARD	125	2009		X	
RIEJU	125 TANGO	125	2008		X	
RIEJU	125 TANGO PRO	125	2008		X	
RIEJU	250 TANGO	250	2008		X	
SUZUKI	UH 125 BURGMAN	125	2002	2006		X
SUZUKI	UH 150 BURGMAN	150	2004	2006		X
VOXAN	1000 CAFE RACER	1000	2001			X
VOXAN	1000 ROADSTER	1000	2001			X
VOXAN	VB1 1000 EVO	1000	2004			X
YAMAHA	125 MAXTER	125	2001			X
YAMAHA	VP 125 X-CITY	125	2008			X
YAMAHA	YP 125 MAJESTY	125	2001			X
YAMAHA	YP 125 X-MAX	125	2006	2010		X
YAMAHA	YP 125 X-MAX SPORT ED.	125	2011			X
YAMAHA	XQ 150 MAXTER	150	2001			X
YAMAHA	YP 150 MAJESTY	150	2001			X
YAMAHA	YP 180 R MAJESTY	180	2004			X

MESCOLA ORGANICA organic compound
OR

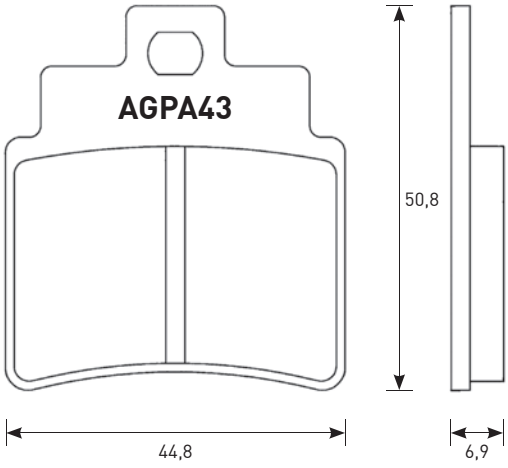

CROSS REFERENCE	
EBC	FA355
BRAKING	883
NEWFREN	.FD.0327
BREMBO	7050
FERODO	FDB2141
CL	1151/3070
SBS	171/775

EQUIVALENT OE #	
OEM Artic CAT	/
OEM Gilera	/
OEM Kymco	/
OEM Sym	/

AGPA43						
MARCA Brand	**MODELLO** Model	**CC**	**DA** From	**A** To	**ANT.** Front	**POST.** Rear
ARCTIC CAT	DVX 250	250	2006	2009		X
ARCTIC CAT	DVX 300	300	2009			X
GILERA	OREGON QUAD 250	250	2007			X
KYMCO	GRAN DINK 250	250	2001		X	
KYMCO	MXU 250	250	2006			X
KYMCO	250 URBAN QUAD	250	2006			X
KYMCO	KXR 250	250	2004			X
KYMCO	300 MAXXER	300	2006	2010		X
KYMCO	300 MAXXER SUPERMOTO	300	2015			X
SYM	VOYAGER 125	125	2005		X	
SYM	JOY MAX 250	250	2007		X	
SYM	VOYAGER 250	250	2005		X	

ACCOSSATO

PASTIGLIE BRAKE PADS

APPLICAZIONI PER CODICE PASTIGLIA / applications for pads code

MESCOLA ORGANICA organic compound
OR

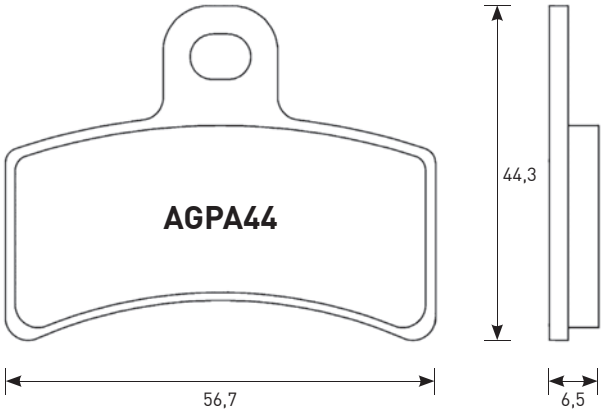

CROSS REFERENCE	
EBC	FA291
NEWFREN	.FD.0268
BREMBO	07GR51
FERODO	FDB2103
SBS	815

EQUIVALENT OE #	
	BT-27922065
	BT-280022065

AGPA44						
MARCA Brand	MODELLO Model	CC	DA From	A To	ANT. Front	POST. Rear
GASGAS	EC 50 BOY	50	2001		X	X
GASGAS	TXT 50 BOY	50	2001		X	X
GASGAS	TXT 50 ROOKIE	50	2002	2003	X	X
GASGAS	MC 65	65	2005		X	X
GASGAS	TXT 80 ROOKIE	80	2002	2003	X	X
GASGAS	PAMPERA 125	125	2004			X
GASGAS	PAMPERA 250	250	2002			X
GASGAS	PAMPERA 280	280	2004			X

MESCOLA ORGANICA organic compound
OR

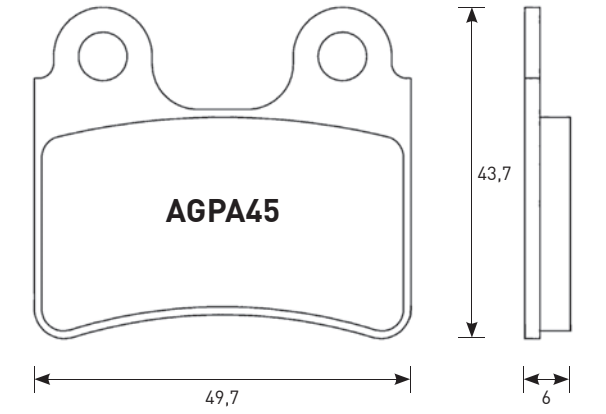

CROSS REFERENCE	
EBC	FA303
BRAKING	831
NEWFREN	.FD.0292
BREMBO	07GR58
FERODO	FDB2109
SBS	802

EQUIVALENT OE #	
45105NN3830	6211
2525352	C389
00TRS01A0027	2525352000

AGPA45						
MARCA Brand	MODELLO Model	CC	DA From	A To	ANT. Front	POST. Rear
AJP	PR3 125 ENDURO	125	2008			X
AJP	PR3 125 SUPERMOTARD	125	2008			X
AJP	PR4 125 ENDURO	125	2004			X
AJP	PR4 125 SUPERMOTARD	125	2004			X
AJP	PR3 200 ENDURO	200	2008			X
AJP	PR3 200 SUPERMOTARD	200	2008			X
AJP	PR4 200 ENDURO	200	2004			X

AGPA45						
MARCA Brand	MODELLO Model	CC	DA From	A To	ANT. Front	POST. Rear
AJP	PR4 200 SUPERMOTARD	200	2004			X
BETA	EVO 80	80	2009		X	
BETA	REV 80	80	2008		X	
BETA	EVO 125 2T	125	2009		X	
BETA	REV 3 125	125	2000	2005	X	X
BETA	REV 3 125	125	2006		X	
BETA	EVO 200 2T	200	2009		X	
BETA	REV 3 200	200	2006		X	
BETA	4T REV 3 250	250	2007		X	
BETA	EVO 250 2T/4T	250	2009		X	
BETA	REV 3 250	250	2000	2004	X	X
BETA	REV 3 250	250	2005		X	
BETA	REV 3 270	275	2000	2004	X	X
BETA	REV 3 270	275	2005		X	
BETA	EVO 290	290	2009		X	
BETA	EVO 300	300	2009		X	
GASGAS	TX 125 RANDONE	125	2012		X	
GASGAS	TXT 250	250	2004		X	
GASGAS	TXT 280	280	2004		X	
GASGAS	TXT 300	300	2004		X	
GASGAS	TXT 300 PRO	300	2007		X	
HONDA	COTA 250 4RT	250	2005		X	
HONDA	COTA 260 4RT	260	2014		X	
MONTESA	250 COTA 4RT	250	2005	2013	X	
MONTESA	260 COTA 4RT	260	2014		X	
MONTESA	360 315R	360	2001	2004	X	
OSSA	208 I	208	2010		X	
OSSA	TR 280 I EXPLORER	280	2012		X	
SCORPA	SY 115 F TRIAL	115	2006		X	
SCORPA	SY 125 F TRIAL	125	2006		X	
SCORPA	SY 250 F TRIAL	250	2006		X	
SCORPA	SY 250 TRIAL	250	2000		X	
SHERCO	ST 125 1.25	125	2006		X	
SHERCO	ST 250 2.5	250	2001		X	
SHERCO	ST 290 2.9	290	2001		X	
SHERCO	ST 320 3.2F	320	2005		X	

PASTIGLIE BRAKE PADS

APPLICAZIONI PER CODICE PASTIGLIA / applications for pads code

MESCOLA ORGANICA E SINTERIZZATA organic and sintered compound
OR / ST

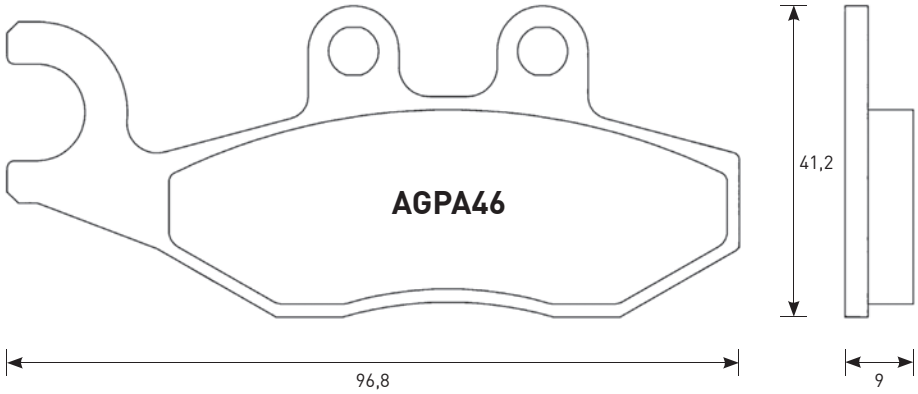

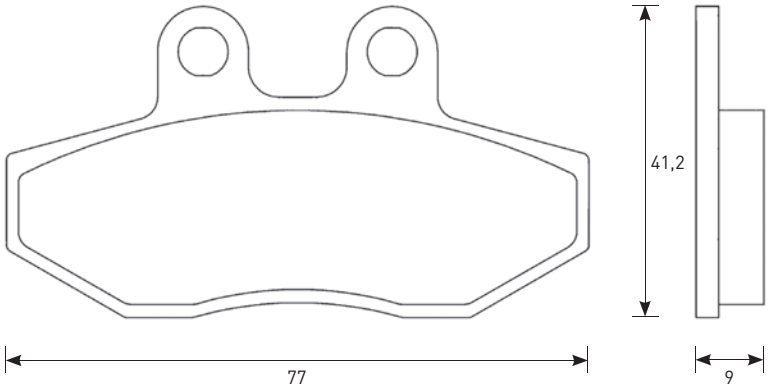

CROSS REFERENCE	
EBC	**SFA353**
OGNIBENE	**167**
BRAKING	**888**
NEWFREN	**.FD.0330**
BREMBO	**7056**
FERODO	**FDB2142**
CL	**3060**
SBS	**786**

EQUIVALENT OE #	
OEM Gilera	**647078**
OEM Piaggio	**647078**
OEM Piaggio	**497072**
OEM Piaggio	**CM068308**

AGPA46						
MARCA Brand	**MODELLO** Model	**CC**	**DA** From	**A** To	**ANT.** Front	**POST.** Rear
APRILIA	**SRV 850**	**850**	**2012**			**X**
BETA	**RR 50 ENDURO**	**50**	**1999**		**X**	
BETA	**RR 50 ENDURO**	**50**	**2010**		**X**	
BETA	**RR 50 ENDURO ALU**	**50**	**2004**	**2007**	**X**	
BETA	**RR 50 MOTARD ALU**	**50**	**2004**		**X**	
BETA	**RR 50 PRO RACE**	**50**	**1998**		**X**	
BETA	**RR 50 STANDARD**	**50**	**1999**		**X**	
BETA	**50 SUPERMOTARD**	**50**	**1999**	**2003**	**X**	
GILERA	**DNA 50 (HENGTONG CALIPER)**	**50**	**2000**		**X**	
GILERA	**DNA 125 (HENGTONG CALIPER)**	**125**	**2001**		**X**	
GILERA	**FX 125 NEXUS**	**125**	**2007**		**X**	**X**
GILERA	**ST 125 RUNNER**	**125**	**2008**		**X**	
GILERA	**VX 125 RUNNER 4T (HENGTONG CALIPER)**	**125**	**2001**		**X**	
GILERA	**FX 125 RUNNER/SP (HENGTONG CALIPER)**	**125**	**2000**		**X**	

AGPA46						
MARCA Brand	**MODELLO** Model	**CC**	**DA** From	**A** To	**ANT.** Front	**POST.** Rear
GILERA	**DNA 180 (HENGTONG CALIPER)**	**180**	**2001**		**X**	
GILERA	**VXR 180 RUNNER**	**180**	**2001**		**X**	
GILERA	**VXR 180 RUNNER 4T (HENGTONG CALIPER)**	**180**	**2001**		**X**	
GILERA	**FXR 180 RUNNER/SP (HENGTONG CALIPER)**	**180**	**2000**		**X**	
GILERA	**ST 200 RUNNER**	**200**	**2008**		**X**	
GILERA	**VXR 200 RUNNER 4T (HENGTONG CALIPER)**	**200**	**2001**		**X**	
GILERA	**250 NEXUS**	**250**	**2007**		**X**	**X**
GILERA	**GP 800**	**800**	**2008**			**X**
PEUGEOT	**125 CITYSTAR**	**125**	**2011**		**X**	
PEUGEOT	**250 SATELIS (NISSIN CALIPER)**	**250**	**2006**			**X**
PIAGGIO	**50 FLY**	**50**	**2005**		**X**	
PIAGGIO	**100 ZIP**	**100**	**2006**	**2010**	**X**	
PIAGGIO	**125 BEVERLY (HENGTONG CALIPER)**	**125**	**2002**	**2006**	**X**	**X**
PIAGGIO	**125 BEVERLY / S**	**125**	**2007**		**X**	**X**
PIAGGIO	**125 BEVERLY TOURER**	**125**	**2008**	**2009**	**X**	**X**
PIAGGIO	**125 CARNABY**	**125**	**2007**	**2009**	**X**	**X**
PIAGGIO	**125 FLY**	**125**	**2005**	**2009**	**X**	
PIAGGIO	**GT 125 L**	**125**	**2004**		**X**	
PIAGGIO	**GTX 125 SUPER HEXAGON (HENGTONG CALIPER) 11'**	**125**	**2000**		**X**	
PIAGGIO	**GTX 125 SUPER HEXAGON (HENGTONG CALIPER) 12'**	**125**	**2000**		**X**	

ACCOSSATO

PASTIGLIE BRAKE PADS

APPLICAZIONI PER CODICE PASTIGLIA / applications for pads code

AGPA46						
MARCA Brand	MODELLO Model	CC	DA From	A To	ANT. Front	POST. Rear
PIAGGIO	125 X7	125	2008		X	
PIAGGIO	125 X8	125	2004	2005	X	
PIAGGIO	125 X9	125	2004	2005	X	
PIAGGIO	125 X9 EVO (HENGTONG CALIPER)	125	2006		X	
PIAGGIO	125 XEVO	125	2008		X	
PIAGGIO	GTS 125	125	2007		X	
PIAGGIO	GTV 125	125	2008		X	
PIAGGIO	150 FLY	150	2005	2009	X	
PIAGGIO	150 X8 STREET	150	2006		X	
PIAGGIO	GTX 180 SUPER HEXAGON (HENGTONG CALIPER) 11'	180	2000		X	
PIAGGIO	GTX 180 SUPER HEXAGON (HENGTONG CALIPER) 12'	180	2001		X	
PIAGGIO	200 BEVERLY (HENGTONG CALIPER)	200	2002	2006	X	X
PIAGGIO	200 CARNABY	200	2008		X	X
PIAGGIO	GT 200 L	200	2004		X	
PIAGGIO	200 X8	200	2004	2005	X	
PIAGGIO	BV 200	200	2002	2004	X	X
PIAGGIO	BV 200	200	2005		X	
PIAGGIO	GTS 250 VESPA ABS	200	2506		X	
PIAGGIO	250 BEVERLY	250	2007		X	X
PIAGGIO	250 GT 60	250	2006		X	
PIAGGIO	250 X7	250	2008		X	
PIAGGIO	250 X8	250	2005		X	
PIAGGIO	250 X9	250	2005		X	
PIAGGIO	250 XEVO	250	2008		X	
PIAGGIO	BV 250	250	2006		X	X
PIAGGIO	GTV 250	250	2008		X	
PIAGGIO	300 BEVERLY TOURER	300	2007		X	X
PIAGGIO	300 CARNABY CRUISER	300	2010		X	X
PIAGGIO	X7 300 IE	300	2010		X	
PIAGGIO	GTS 300 VESPA SUPER	300	2009		X	
PIAGGIO	400 MP3 IE	400	2007			X
PIAGGIO	400 MP3 LT	400	2009			X
PIAGGIO	400 BEVERLY IE	400	2007			X
PIAGGIO	400 X8	400	2007		X	X
PIAGGIO	400 XEVO	400	2008		X	X

MESCOLA ORGANICA organic compound
OR

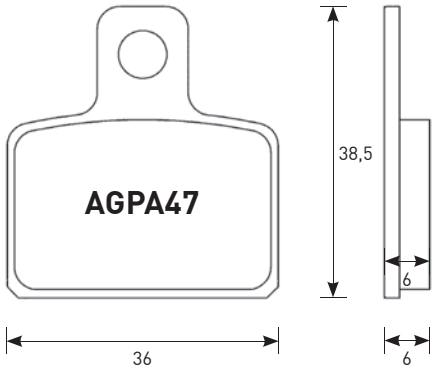

CROSS REFERENCE	
EBC	FA351
NEWFREN	.FD.0315
BREMBO	07GR48
FERODO	FDB2127
SBS	803

EQUIVALENT OE #	
43105NN3820	KM0961320
7040	810K0209
C390	S10B-40202-00-00
BT280222068	43105NN3830

AGPA47						
MARCA Brand	MODELLO Model	CC	DA From	A To	ANT. Front	POST. Rear
APRILIA	50 MINI RX	50	2004		X	
BETA	PRO RACE 12/10 50	50	2004		X	X
FACTORY	R12 50 PHANTOM AGUA	50	2006		X	
FACTORY	R14 50 PHANTOM AGUA	50	2004		X	
FACTORY	R2 65 PHANTOM		2004		X	
GASGAS	TXT 125	125	2004			X
GASGAS	TX 125 RANDONE	125	2012			X
GASGAS	TXT 200	200	2004			X
GASGAS	TXT 250	250	2004			X

AGPA47						
MARCA Brand	MODELLO Model	CC	DA From	A To	ANT. Front	POST. Rear
GASGAS	TXT 280	280	2004			X
GASGAS	TXT 300	300	2004			X
GASGAS	TXT 300 PRO	300	2007			X
HONDA	COTA 250 4RT	250	2005			X
HONDA	COTA 260 4RT	260	2014			X
HUSQVARNA	CR 50 JUNIOR	50	2006		X	
HUSQVARNA	CR 50 PRO SENJOR	50	2006		X	
HUSQVARNA	CR 50 SENIOR	50	2006		X	
HUSQVARNA	SM 50	50	2010		X	
MACBOR	XC 50 510 RACING	50	2004		X	
MACBOR	XC 50 512 PRO	50	2004		X	
MACBOR	XC 50 512 R 6V	50	2004		X	
MACBOR	XC 50 512 RACING	50	2004		X	
MACBOR	XC 50 512 T	50	2004		X	
MONTESA	COTA 250 4RT	250	2005	2013		X
MONTESA	COTA 260 4RT	260	2014			X
MONTESA	315R 360	315	2001	2004		X
OSSA	TR 280 I	280	2010			X
OSSA	TR 280 I EXPLORER	280	2012			X
SCORPA	SY 115 F TRIAL	115	2006			X
SCORPA	TY-S 115 F TRIAL	115	2006			X
SCORPA	SY 125 F TRIAL	125	2006			X
SCORPA	TY-S 125 F TRIAL	125	2006			X
SCORPA	SY 250 F TRIAL	250	2006			X
SCORPA	SY 250 TRIAL	250	2000			X
SHERCO	ST 125 1.25	125	2006			X
SHERCO	ST 250 2.5	250	2001			X
SHERCO	ST 290 2.9	290	2001			X
SHERCO	ST 320 3.2F	320	2005			X
SCORPA	SY 250 TRIAL	250	2000		X	
SHERCO	ST 125 1.25	125	2006		X	
SHERCO	ST 250 2.5	250	2001		X	
SHERCO	ST 290 2.9	290	2001		X	
SHERCO	ST 320 3.2F	320	2005		X	

PASTIGLIE BRAKE PADS

APPLICAZIONI PER CODICE PASTIGLIA / applications for pads code

MESCOLA ORGANICA organic compound
OR

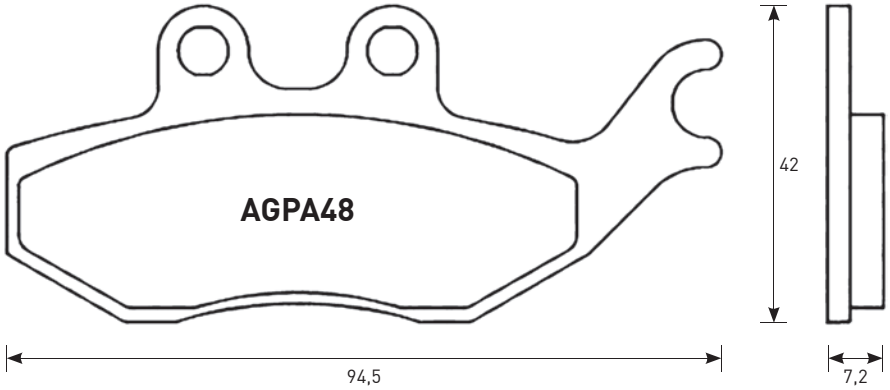

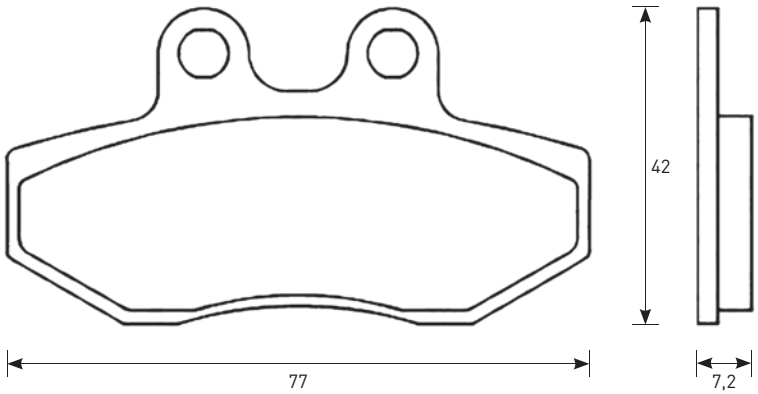

CROSS REFERENCE	
EBC	**FA374**
BRAKING	**885**
NEWFREN	**.FD.0334**
BREMBO	**7054**
FERODO	**FDB2147**
CL	**3081**
SBS	**173/780**

EQUIVALENT OE #	
4716610	**9307000**

AGPA48						
MARCA Brand	**MODELLO** Model	**CC**	**DA** From	**A** To	**ANT.** Front	**POST.** Rear
ITALJET	**250 JUPITER**	**250**	**2001**			**X**
KEEWAY	**TX 50 SM**	**50**	**2010**		**X**	
KEEWAY	**TX 125 SM**	**125**	**2010**		**X**	
RIEJU	**NKD 50**	**50**	**2004**	**2007**	**X**	
RIEJU	**RS2 50 MATRIX**	**50**	**2003**		**X**	
RIEJU	**RS2 50**	**50**	**2012**		**X**	

PASTIGLIE BRAKE PADS

APPLICAZIONI PER CODICE PASTIGLIA / applications for pads code

MESCOLA ORGANICA organic compound
OR

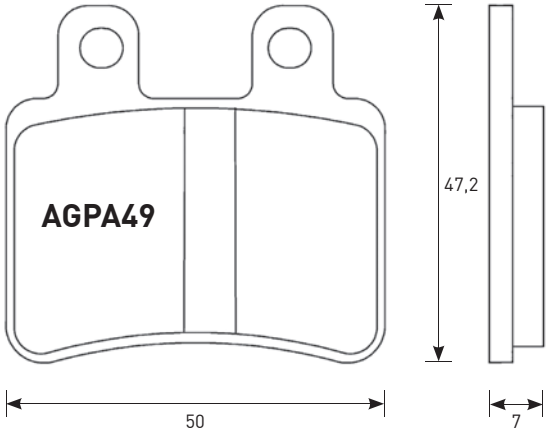

CROSS REFERENCE	
EBC	FA350
OGNIBENE	158
BRAKING	878
NEWFREN	.FD.0323
BREMBO	7048
FERODO	FDB2128
CL	1223/3063
SBS	167/773

EQUIVALENT OE #	
OEM Yamaha	3D6 F5811 00

AGPA49						
MARCA Brand	MODELLO Model	CC	DA From	A To	ANT. Front	POST. Rear
DERBI	SENDA DRD PRO SM 50	50	2005			X
DERBI	BOULEVARD 125	125	2003		X	
DERBI	SENDA BAJA 125	125	2006			X
DERBI	BOULEVARD 150	150	2003		X	
ITALJET	50 JET-SET	50	2002		X	
ITALJET	100 MILLENNIUM 2T	100	2001		X	
ITALJET	125 JET-SET	125	2002		X	
ITALJET	125 MILLENNIUM	125	2000		X	
ITALJET	150 JET-SET	150	2002		X	
ITALJET	150 MILLENNIUM	150	2000		X	
PEUGEOT	ELYSTAR 50	50	2003			X

AGPA49						
MARCA Brand	MODELLO Model	CC	DA From	A To	ANT. Front	POST. Rear
PEUGEOT	ELYSEO 125	125	2000			X
PEUGEOT	ELYSTAR 125	125	2003			X
PEUGEOT	GEOPOLIS 125	125	2006			X
PEUGEOT	JET-FORCE COMPRESSOR 125	125	2003			X
PEUGEOT	LOOXOR 125	125	2003			X
PEUGEOT	SATELIS 125	125	2004	2006		X
PEUGEOT	SATELIS ABS 125	125	2004			X
PEUGEOT	RS 125 GEOPOLIS	125	2010			X
PEUGEOT	150 ELYSEO	150	2000			X
PEUGEOT	150 ELYSTAR	150	2003			X
PEUGEOT	400 GEOPOLIS (AJP CAL.)	400	2007			X
PEUGEOT	600 SATELIS ABS	600	2004			X
RIEJU	RS2 50 MATRIX	50	2003			X
SCORPA	T-RIDE 250	250	2008		X	
SHERCO	SE 50 ENDURO	50	2007			X
SHERCO	SM 50 SUPERMOTARD	50	2007			X
SHERCO	SE 125 1.25F	125	2010		X	
YAMAHA	DT 50 R	50	2004			X
YAMAHA	DT 50 X SUPERMOTARD	50	2004			X
YAMAHA	XT 125 R	125	2005		X	

PASTIGLIE BRAKE PADS

APPLICAZIONI PER CODICE PASTIGLIA / applications for pads code

MESCOLA ORGANICA organic compound
OR

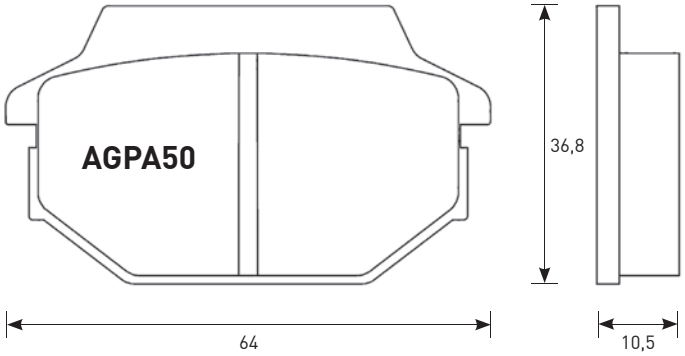

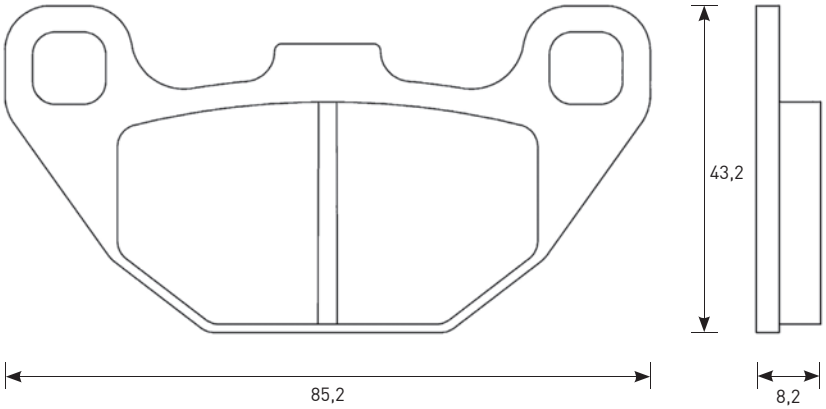

CROSS REFERENCE	
EBC	**FA305**
OGNIBENE	**168**
BRAKING	**869**
NEWFREN	**.FD.0269**
BREMBO	**7022**
FERODO	**FDB2096**
CL	**1123/3068**
SBS	**154/749**

EQUIVALENT OE #	
OEM Kymco	**45105 LEJ2 305**
OEM Kymco	**45105 H7C 000A**

AGPA50						
MARCA Brand	**MODELLO** Model	**CC**	**DA** From	**A** To	**ANT.** Front	**POST.** Rear
KYMCO	**AGILITY 50 4T R 16**	**50**	**2006**		**X**	
KYMCO	**50 MXER**	**50**	**2003**			**X**
KYMCO	**50 MXU**	**50**	**2005**			**X**
KYMCO	**PEOPLE 50**	**50**	**1999**	**2002**	**X**	
KYMCO	**SUPER 8 50**	**50**	**2008**		**X**	
KYMCO	**SUPER 9 50 L/C**	**50**	**2002**			**X**
KYMCO	**AGILITY 125 16+**	**125**	**2014**		**X**	
KYMCO	**125 MXER**	**125**	**2003**			**X**
KYMCO	**PEOPLE 125**	**125**	**2001**		**X**	
KYMCO	**PEOPLE 125 ONE I**	**125**	**2014**		**X**	

AGPA50						
MARCA Brand	**MODELLO** Model	**CC**	**DA** From	**A** To	**ANT.** Front	**POST.** Rear
KYMCO	**SUPER 8 125**	**125**	**2008**		**X**	
KYMCO	**SUPER 9 125**	**125**	**2000**			**X**
KYMCO	**S 125 PEOPLE**	**125**	**2005**		**X**	
KYMCO	**150 MXER**	**150**	**2003**			**X**
KYMCO	**150 MXU**	**150**	**2005**			**X**
KYMCO	**PEOPLE 150**	**150**	**2001**		**X**	
KYMCO	**AGILITY 200 16+**	**200**	**2014**		**X**	
KYMCO	**AGILITY 200 R 16**	**200**	**2011**		**X**	
KYMCO	**S PEOPLE 200**	**200**	**2005**		**X**	
KYMCO	**SUPER 9 200**	**200**	**2000**		**X**	
LAVERDA	**PHOENIX 125**	**125**	**2001**			**X**
LAVERDA	**PHOENIX 150**	**150**	**2001**			**X**
LAVERDA	**PHOENIX 200**	**200**	**2001**			**X**
SYM	**HD 125**	**125**	**2004**		**X**	
SYM	**JOY RIDE 125**	**125**	**2001**			**X**
SYM	**JOY RIDE 150**	**150**	**2001**			**X**
SYM	**HD 200**	**200**	**2004**		**X**	
SYM	**JOY RIDE 200**	**200**	**2001**			**X**
SYM	**GT 500**	**500**	**2007**			**X**

ACCOSSATO

PASTIGLIE BRAKE PADS

APPLICAZIONI PER CODICE PASTIGLIA / applications for pads code

MESCOLA ORGANICA, SINTERIZZATA, STMX E EV1 organic, sintered, stmx and ev1 compounds
OR / ST / STMX / EV1

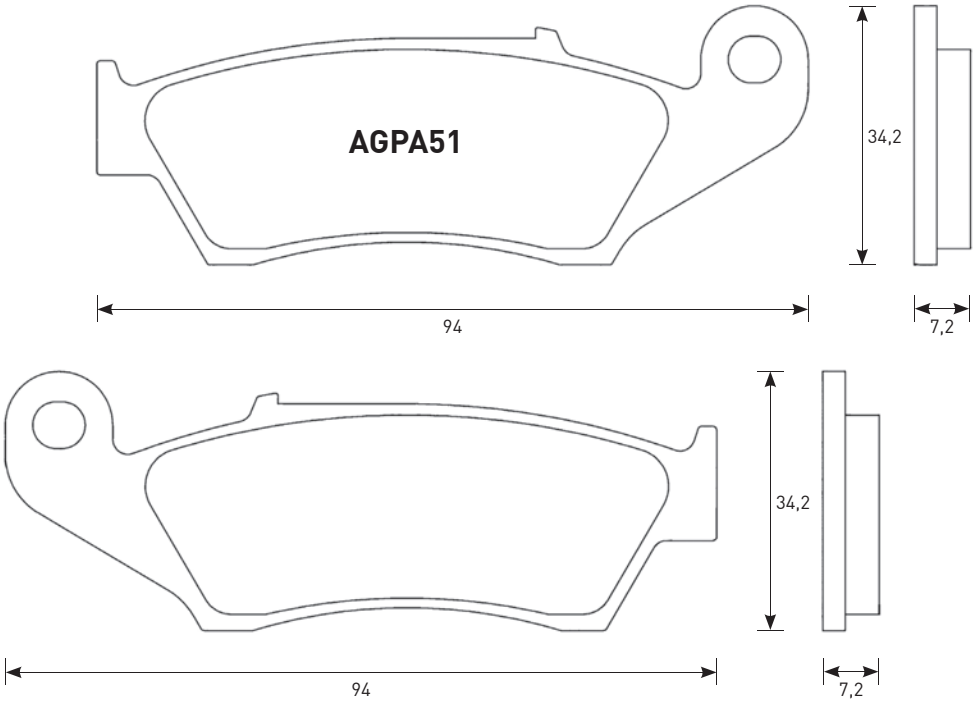

CROSS REFERENCE	
EBC	FA185
OGNIBENE	225
BRAKING	772
NEWFREN	.FD.0193
BREMBO	07KA17
FERODO	FDB892
CL	2300
SBS	694

EQUIVALENT OE #	
OEM Aprilia	9100788
OEM Honda	45105 KT0 405
OEM Honda	45105-KZ1-405
OEM Honda	45105 MY6 405
OEM Honda	45105 MY6 415
OEM Honda	06455 KCZ 000
OEM Honda	06455 MAY 000
OEM Honda	06455 MY1 405
OEM Kawasaki	43082 1286
OEM Kawasaki	43082 0049
OEM Kawasaki	43082 1149
OEM Kawasaki	43082 1247
OEM Kawasaki	43082 1266
OEM Kawasaki	43082 1172
OEM Kawasaki	43082 1218
OEM Kawasaki	43082 1152
OEM Kawasaki	43082 1193
OEM Suzuki	59300 36890
OEM Suzuki	59300 13860
OEM Suzuki	59300 36850
OEM Suzuki	59300 13830
OEM Suzuki	59300 36860
OEM Suzuki	59301 36810
OEM Suzuki	59300 36870
OEM Suzuki	59300 36880
OEM Yamaha	5DH W0045 10
OEM Yamaha	5MV W0045 00
OEM Yamaha	5MV W0045 01
OEM Yamaha	5DH W0045 00
OEM Yamaha	5D7 F5811 00
OEM Yamaha	32D W0045 00

AGPA51						
MARCA Brand	MODELLO Model	CC	DA From	A To	ANT. Front	POST. Rear
AJP	PR5 250 ENDURO	250	2009		X	
AJP	PR5 250 SUPERMOTARD	250	2009		X	
APRILIA	MVX 450	450	2009		X	
APRILIA	RXV 450	450	2006		X	
APRILIA	RXV 550	550	2006		X	
BETA	RR 250	250	2005		X	
BETA	CROSSTRAINER 300	300	2015		X	
BETA	RR 300	300	2013		X	
BETA	RR 350 EFI	350	2015		X	
BETA	RR 350 EFI RACING	350	2015		X	
BETA	RR 350 ENDURO	350	2012	2014	X	
BETA	RR 390	385	2015		X	
BETA	RR 400 ENDURO	400	2005		X	
BETA	RR 430	430	2015		X	
BETA	RR 430 RACING	430	2015		X	
BETA	RR 450 CROSS COUNTRY	450	2012		X	
BETA	RR 450 ENDURO	450	2005		X	
BETA	RR 480	480	2015		X	
BETA	RR 480 RACING	480	2015		X	
BETA	RR 498 ENDURO	498	2012		X	
BETA	RR 525 ENDURO	510	2005		X	
BIMOTA	BBX 300 ENDURO	300	2012		X	
BIMOTA	BBX 508 ENDURO	508	2012		X	
BRAKING	FRONT CROSS					
CANNONDALE	MX 400	400	2000		X	
CANNONDALE	C 440 R	432	2003		X	
CANNONDALE	E 440 A / R	432	2003		X	
CANNONDALE	X 440	432	2003		X	
CPI	125 SHAEL	125	2002		X	

PASTIGLIE BRAKE PADS

APPLICAZIONI PER CODICE PASTIGLIA / applications for pads code

ACCOSSATO

AGPA51						
MARCA Brand	**MODELLO** Model	**CC**	**DA** From	**A** To	**ANT.** Front	**POST.** Rear
FANTIC	REGOLARITÀ COMPETIZIONE 50	50	2008		X	
FANTIC	MX 50 REGOLARITÀ COMPETIZIONE	50	2008		X	
FANTIC	MX 65 REGOLARITÀ COMPETIZIONE	65	2008		X	
FANTIC	REGOLARITÀ COMPETIZIONE 80	80	2008		X	
FANTIC	MX 85 REGOLARITÀ COMPETIZIONE	85	2008		X	
FANTIC	CABALLERO ENDURO 125 2T	125	2012		X	
FANTIC	CABALLERO MOTARD 125 2T	125	2010		X	
FANTIC	REGOLARITÀ COMPETIZIONE 125	125	2008		X	
GASGAS	ENDUCROSS 125	125	1993		X	
GASGAS	EC 125 00	125	2000		X	
GASGAS	MC 125	125	2003		X	
GASGAS	EC 200	200	2000		X	
GASGAS	EC 200 HOBBY	200	2007		X	
GASGAS	EC 250	250	2000	2012	X	
GASGAS	EC 250 FSE	250	2002		X	
GASGAS	MC 250	250	2000		X	
GASGAS	EC 300	300	2000	2012	X	
GASGAS	EC 400 FSE	400	2002		X	
GASGAS	PAMPERA 400	400	2006		X	
GASGAS	EC 450 FSE	450	2003		X	
GASGAS	EC 450 FSR	450	2007		X	
GASGAS	EC 515 FSR	515	2008		X	
HM	125 SUPERMOTARD	125	2000	2002	X	
HM	CR 125 SUPERMOTARD	125	2004	2006	X	
HM	CRE 125 ENDURO	125	1995	2002	X	
HM	CRE 125 SUPERMOTARD	125	2003		X	
HM	250 SUPERMOTARD	250	2000	2002	X	
HM	CRE 250 ENDURO	250	1995	2002	X	
HM	CRE 250 F ENDURO	250	2004		X	
HM	CRE 250 SUPERMOTARD	250	2003	2007	X	
HM	CRE 250 X ENDURO	250	2004		X	
HM	CRF 250 SUPERMOTARD	250	2004	2006	X	
HM	CRE 450 F ENDURO	450	2002		X	
HM	CRE 450 X ENDURO	450	200		X	
HM	CRF 450 SUPERMOTARD	450	2002	2006	X	
HONDA	CR 125	125	2002	2007	X	
HONDA	CR 125 R	125	1995	2001	X	
HONDA	CRE 125	125	2002		X	
HONDA	XLR 125 R	125	1998		X	
HONDA	XR 125 L	125	2003		X	
HONDA	CRF 150 F	150	2003		X	
HONDA	CTX 200	200	2004		X	
HONDA	CRF 230	223	2004	2009	X	
HONDA	CRF 230 L	223	2008		X	
HONDA	CRF 230 M	223	2009		X	
HONDA	SL 230	223	1997		X	
HONDA	CR 250	250	2002	2007	X	
HONDA	CR 250 R	250	1995	2001	X	
HONDA	CRE 250	250	2002		X	
HONDA	CRE 250 F	250	2004		X	
HONDA	CRF 250 R	250	2004	2009	X	
HONDA	CRF 250 R EFI	250	2010	2014	X	
HONDA	CRF 250 X	250	2004		X	
HONDA	XLR 250 R SPL	250	1994		X	
HONDA	XR 250 L	250	1993	1997	X	

AGPA51						
MARCA Brand	**MODELLO** Model	**CC**	**DA** From	**A** To	**ANT.** Front	**POST.** Rear
HONDA	XR 250 S, R	250	1996		X	
HONDA	XR 300	300	2010		X	
HONDA	XR 400 R	400	1996		X	
HONDA	XR 400 SUPERMOTARD	400	2000		X	
HONDA	XR 440 R	435	2000		X	
HONDA	CRE 450 F	450	2002		X	
HONDA	CRF 450 EFI	450	2009	2012	X	
HONDA	CRF 450 R	450	2002	2008	X	
HONDA	CRF 450 R EFI	450	2013		X	
HONDA	CRF 450 X	450	2005		X	
HONDA	TRX 450 R	450	2004		X	
HONDA	CR 500 R	500	1995	2001	X	
HONDA	XL 600 V, TRANSALPINO	600	1997	1999	X	
HONDA	XR 600 R	600	1993	2000	X	
HONDA	XL 650 V TRANSALP	650	2000		X	
HONDA	XR 650 L	650	1993		X	
HONDA	XR 650 R	650	2000		X	
HONDA	TRX 700 XX	700	2008		X	
HONDA	XL 700 TRANSALP	700	2008		X	
HONDA	XRV 750 AFRICA TWIN	750	1993	2003	X	
KAWASAKI	KX 125 K1	125	1994		X	
KAWASAKI	KX 125 K2-M2	125	1995		X	
KAWASAKI	KDX 200 E6, H1-H9	200	1994	1999	X	
KAWASAKI	KDX 220 R A4	220	1997		X	
KAWASAKI	KLX 250	250	1998	2007	X	
KAWASAKI	KLX 250 D1-D4, ES	250	1993	1996	X	
KAWASAKI	KX 250 K1	250	1994		X	
KAWASAKI	KX 250 K2-M2	250	1995		X	
KAWASAKI	KX-F 250	250	2004	2010	X	
KAWASAKI	KX-F 250 DFI	250	2011		X	
KAWASAKI	KLX 300 R A2	300	1997		X	
KAWASAKI	KLX 400 R	400	2003		X	
KAWASAKI	KLX 400 SR	400	2003		X	
KAWASAKI	KLX 450 R	450	2007		X	
KAWASAKI	KX-F 450	450	2006	2008	X	
KAWASAKI	KX-F 450 DFI	450	2009		X	
KAWASAKI	KX 500 E6-E7	500	1994	1995	X	
KAWASAKI	KX 500 E8-	500	1996		X	
KAWASAKI	KLX 650 A1-3, C1-4	650	1993	1996	X	
KAWASAKI	KLX 650 R	650	1993	1995	X	
KAWASAKI	KLX 650 R D1	650	1996		X	
SUZUKI	DR 125 SM	125	2008		X	
SUZUKI	RM 125	125	2005		X	
SUZUKI	RM 125 T-K	125	1996	2004	X	
SUZUKI	DR-Z 250	250	2001		X	
SUZUKI	RM 250	250	2005		X	
SUZUKI	RM 250 T-K	250	1996	2004	X	
SUZUKI	RMX 250 T-W	250	1996	1998	X	
SUZUKI	RMX 250 X-K1	250	1999		X	
SUZUKI	RM-Z 250	250	2004	2009	X	
SUZUKI	RM-Z 250 EFI	250	2010		X	
SUZUKI	DR 350 V, W, X	350	1997		X	
YAMAHA	DR-Z 400 S /E	400	2000		X	
YAMAHA	DR-Z 400 SM	400	2005		X	
YAMAHA	RMX 450 Z EFI	450	2010		X	
YAMAHA	RM-Z 450	450	2005	2007	X	
YAMAHA	RM-Z 450 EFI	450	2008		X	
YAMAHA	DR 650 SE T-W	650	1996		X	
YAMAHA	WR 125	125	1998	2002	X	
YAMAHA	YZ 125	125	1998	2007	X	
YAMAHA	WR 250	250	1998	2002	X	

PASTIGLIE BRAKE PADS

APPLICAZIONI PER CODICE PASTIGLIA / applications for pads code

AGPA51						
MARCA Brand	MODELLO Model	CC	DA From	A To	ANT. Front	POST. Rear
YAMAHA	WR 250 F	250	2001	2013	X	
YAMAHA	WR 250 F EFI	250	2015		X	
YAMAHA	WR 250 R	250	2008		X	
YAMAHA	YZ 250	250	1998	2007	X	
YAMAHA	YZ 250 F	250	2001	2006	X	
YAMAHA	WR 400 F	400	1998	2000	X	
YAMAHA	YZ 400 F	400	1998	1999	X	
YAMAHA	WR 426 F	426	2001	2002	X	
YAMAHA	YZ 426 F	426	2000	2002	X	
YAMAHA	WR 450 F	450	2003		X	
YAMAHA	YZ 450 F	450	2003	2007	X	

AGPA51						
MARCA Brand	MODELLO Model	CC	DA From	A To	ANT. Front	POST. Rear
ZERO	DS ZF11.4		2013	2014	X	
ZERO	DS ZF8.5		2013	2014	X	
ZERO	FX ZF2.8		2013	2014	X	
ZERO	FX ZF5.7		2013	2014	X	
ZERO	MX ZF2.8		2013		X	
ZERO	MX ZF5.7		2013		X	
ZERO	S ZF11.4		2013	2014	X	
ZERO	S ZF8.5		2013	2014	X	
ZERO	SR ZF11.4		2014		X	
ZERO	XU ZF2.8		2013		X	
ZERO	XU ZF5.7		2013		X	

MESCOLA ORGANICA organic compound
OR

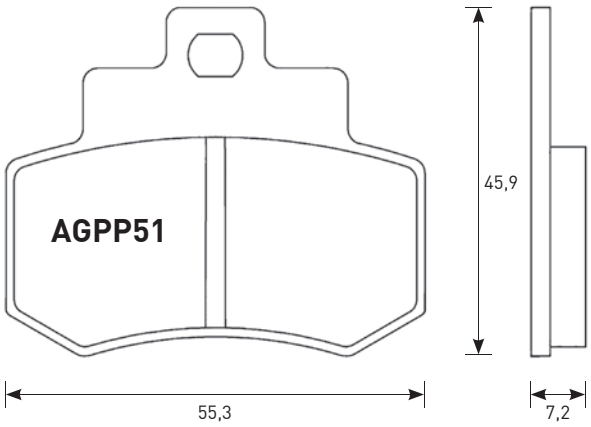

CROSS REFERENCE	
EBC	SFA356
BRAKING	884
NEWFREN	.FD.0328
BREMBO	7051
FERODO	FDB2140
CL	3071
SBS	172

EQUIVALENT OE #	
OEM Kymco	43105 HMA0 00A
OEM Kymco	43105 KKC49 000

AGPP51						
MARCA Brand	MODELLO Model	CC	DA From	A To	ANT. Front	POST. Rear
KYMCO	GRAN DINK 250	250	2001			X

PASTIGLIE BRAKE PADS

APPLICAZIONI PER CODICE PASTIGLIA / applications for pads code

MESCOLA ORGANICA organic compound
OR

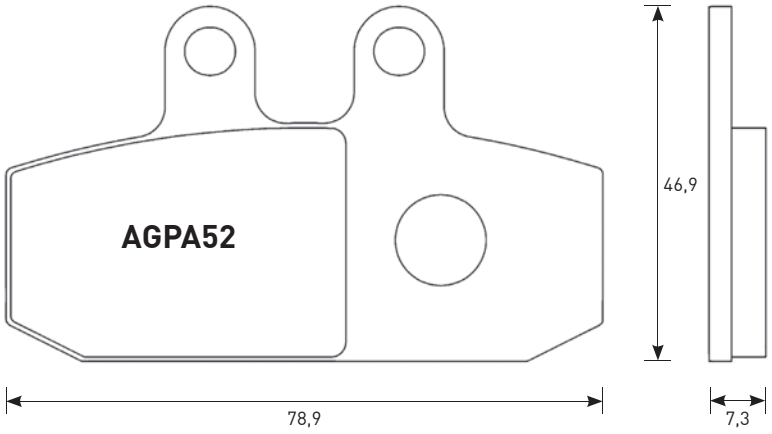

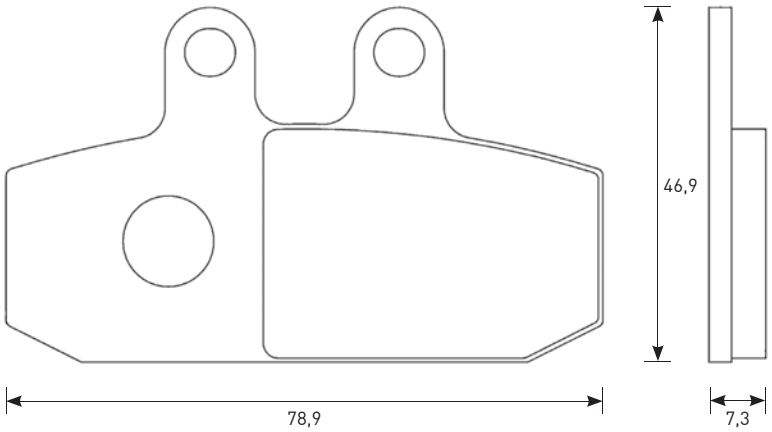

CROSS REFERENCE	
EBC	**FA256**
NEWFREN	**.FD.0335**
BREMBO	**7057**
FERODO	**FDB438/FDB214**
CL	**3020/3072**
SBS	**179**

EQUIVALENT OE #	
OEM Aprilia	**8113865**
OEM Aprilia	**8133761**

AGPA52						
MARCA Brand	**MODELLO** Model	**CC**	**DA** From	**A** To	**ANT.** Front	**POST.** Rear
APRILIA	**ATLANTIC 500 ATLANTIC RIGHT**	**500**	**2002**	**2005**	**X**	

MESCOLA ORGANICA E SINTERIZZATA organic and sintered compound
OR / ST

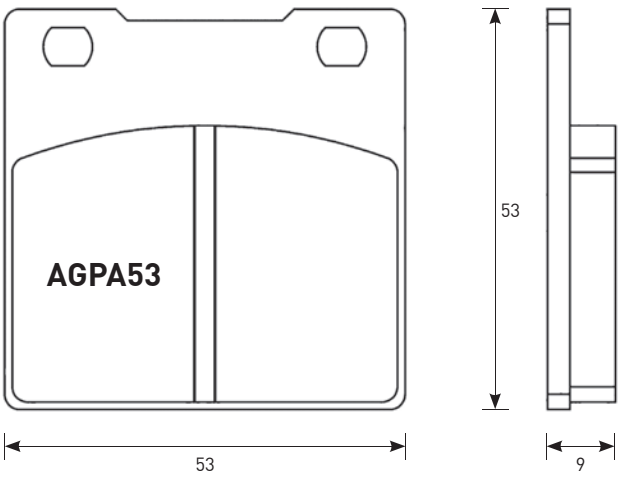

CROSS REFERENCE	
EBC	**FA063**
OGNIBENE	**213**
BRAKING	**719**
NEWFREN	**.FD.0060**
BREMBO	**07KS05**
FERODO	**FDB338**
CL	**2282**
SBS	**556**

EQUIVALENT OE #	
OEM Kawasaki	**43082 1182**
OEM Kawasaki	**43082 1180**
OEM Kawasaki	**43082 1098**
OEM Kawasaki	**43082 1103**
OEM Kawasaki	**43082 1257**
OEM Kawasaki	**43082 1200**
OEM Suzuki	**69130 45C00**
OEM Suzuki	**69130 48B00**
OEM Suzuki	**69101 05850**
OEM Suzuki	**69100 05890**
OEM Suzuki	**69100 05870**
OEM Suzuki	**69100 05860**
OEM Suzuki	**69100 05850**
OEM Suzuki	**69100 05830**
OEM Suzuki	**69100 21820**
OEM Suzuki	**69100 20810**
OEM Suzuki	**69130 34C00**
OEM Suzuki	**69130 21E00**
OEM Suzuki	**69101 05820**
OEM Suzuki	**69100 34860**

ACCOSSATO

PASTIGLIE BRAKE PADS

APPLICAZIONI PER CODICE PASTIGLIA / applications for pads code

AGPA53						
MARCA Brand	MODELLO Model	CC	DA From	A To	ANT. Front	POST. Rear
HYOSUNG	GT 250 COMET	250	2002			X
HYOSUNG	COMET 600	600	2002			X
KAWASAKI	Z 250	250	1978	1980		X
KAWASAKI	Z 250 J, A3	250	1981			X
KAWASAKI	ZX-4 400 90 LS	400	1990			X
KAWASAKI	ZXR 400	400	1989	1990		X
KAWASAKI	ZXR 400 L1-L9	400	1991	2002		X
KAWASAKI	600 R, NINJA	600	1989			X
KAWASAKI	ZX-7R 750 NINJA	750	1989	1995		X
KAWASAKI	ZX-7R 750 NINJA P1-P8	750	1996	2003		X
KAWASAKI	ZXR 750 R	750	1989	1995		X
KAWASAKI	ZRX 1100	1100	1996	2000		X
KAWASAKI	ZX 1100 D1-D5 ZX-11	1100	1993	1997		X
KAWASAKI	ZZR 1100	1100	1994	2001		X
KAWASAKI	ZRX 1200	1200	2001			X
KAWASAKI	ZRX 1200 R	1200	2001			X
KAWASAKI	ZRX 1200 S	1200	2001			X
KAWASAKI	ZX-12R 1200 NINJA	1200	2000	2003		X
KAWASAKI	ZX-12R 1200 NINJA (RAD.CAL)	1200	2004			X
KAWASAKI	ZZR 1200	1200	2002			X
SUZUKI	RG 125 WOLF	125	1992	1994		X
SUZUKI	250 ACROSS	250	1990			X
SUZUKI	250 BANDIT	250	1990	1996		X
SUZUKI	250 COBRA	250	1990			X
SUZUKI	250 WOLF	250	1990			X
SUZUKI	GF 250 S	250	1988			X
SUZUKI	GSX 250 S, KATANA	250	1991			X
SUZUKI	GSX-R 250	250	1988	1989		X
SUZUKI	GSX-R 250 R	250	1989			X
SUZUKI	RG 250	250	1983	1984	X	X
SUZUKI	RG 250 GAMMA	250	1984	1988		X
SUZUKI	RGV 250	250	1988			X
SUZUKI	RGV 250 K	250	1989	1990		X
SUZUKI	TV 250 J 88 HF	250	1988			X
SUZUKI	350 GOOSE	350	1992			X
SUZUKI	GSF 400 BANDIT	400	1991	1997		X
SUZUKI	GSX 400 F	400	1989			X
SUZUKI	GSX 400 FWS	400	1983		X	X
SUZUKI	GSX 400 IMPULSE	400	1994	1996		X
SUZUKI	GSX 400 S, KATANA	400	1992			X
SUZUKI	GSX 400 X	400	1986			X
SUZUKI	GSX-R 400	400	1987	1989		X
SUZUKI	GSX-R 400 F	400	1985	1986		X
SUZUKI	GSX-R 400 R	400	1990	1995		X

AGPA53						
MARCA Brand	MODELLO Model	CC	DA From	A To	ANT. Front	POST. Rear
SUZUKI	RF 400 RVC	400	1993	1997		X
SUZUKI	GS 500	500	2004			X
SUZUKI	GS 500 E	500	1989	2003		X
SUZUKI	GS 500 F	500	2004			X
SUZUKI	GSX 500 E	500	1983		X	X
SUZUKI	RG 500	500	1985	1987		X
SUZUKI	RG 500 GAMMA	500	1985			X
SUZUKI	GS 550 ED, ESD, LD	550	1983		X	X
SUZUKI	GSX 550 ED	550	1983	1984	X	X
SUZUKI	GSX 550 ES, EF	550	1984	1987	X	X
SUZUKI	GSF 600 BANDIT / S BANDIT LEFT/REAR	600	2000	2004		X
SUZUKI	GSF 600 N, S BANDIT	600	1995	1999		X
SUZUKI	GSX 600 FJ-FK KATANA	600	1988	1989		X
SUZUKI	GSX 600 FL-FV KATANA	600	1990	1997		X
SUZUKI	GSX 600 FW LEFT/REAR	600	1998			X
SUZUKI	GSX-R 600	600	1997	2003		X
SUZUKI	RF 600 R	600	1993	1996		X
SUZUKI	SV 650 ,S LEFT/REAR	650	1999	2002		X
SUZUKI	GS 750 KATANA	750	1996		X	X
SUZUKI	GS 750 RF	750	1985	1988		X
SUZUKI	GSX 750 ES	750	1984	1985	X	X
SUZUKI	GSX 750 FK-FT KATANA	750	1989	1996		X
SUZUKI	GSX 750 FW LEFT/REAR	750	1998	2002		X
SUZUKI	GSX 750 LEFT/REAR	750	1998	2008		X
SUZUKI	GSX-R 750	750	1985	1988		X
SUZUKI	GSX-R 750	750	1994	1999		X
SUZUKI	GSX-R 750 F	750	1989	1991		X
SUZUKI	GSX-R 750 W	750	1992	1993		X
SUZUKI	GSX-R 750 Y	750	2000	2003		X
SUZUKI	TL 1000 RW	1000	1998	2002		X
SUZUKI	TL 1000 S V-TWIN	1000	1997	2001		X
SUZUKI	GSX 1100 EF	1100	1986		X	X
SUZUKI	GSX 1100 F	1100	1993			X
SUZUKI	GSX 1100 G LEFT/REAR	1100	1996			X
SUZUKI	GSX 1100 KATANA	1100	1993			X
SUZUKI	GSX-R 1100 G, H, J	1100	1986	1988		X
SUZUKI	GSX-R 1100 K-N	1100	1989	1992		X
SUZUKI	GSX-R 1100 WP,WR,WS,WT,WV	1100	1993	1997		X
SUZUKI	GSF 1200 BANDIT	1200	1995	2005		X
SUZUKI	GSF 1200 S BANDIT	1200	2001	2005		X
SUZUKI	GSX 1200	1200	1999	2001		X
SUZUKI	GSX-R 1300 HAYABUSA	1300	1999	2007		X

PASTIGLIE BRAKE PADS

APPLICAZIONI PER CODICE PASTIGLIA / applications for pads code

ACCOSSATO

MESCOLA ORGANICA E SINTERIZZATA organic and sintered compound
OR / ST

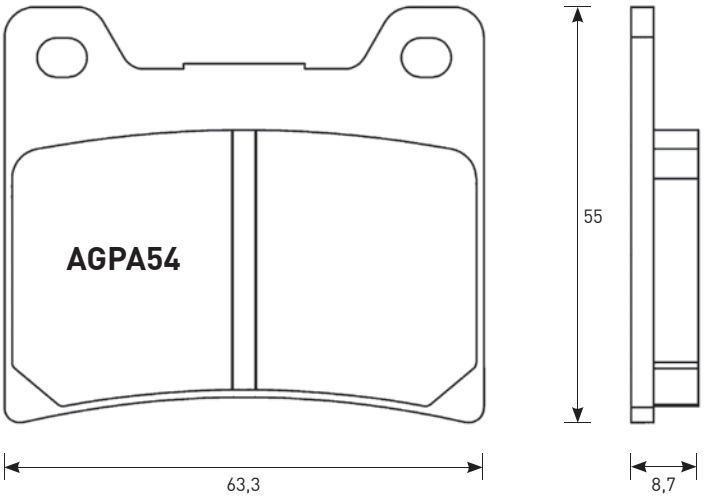

CROSS REFERENCE	
EBC	**FA088**
OGNIBENE	**207**
BRAKING	**661**
NEWFREN	**.FD.057**
BREMBO	**07YA1107**
FERODO	**FDB337**
CL	**2283**
SBS	**555**

EQUIVALENT OE #	
OEM Yamaha	**26H W0045 01**
OEM Yamaha	**4SV W0045 50**
OEM Yamaha	**31A W0046 00**
OEM Yamaha	**1FK W0046 02**
OEM Yamaha	**29L W0046 00**
OEM Yamaha	**29L W0046 01**
OEM Yamaha	**1FK W0046 01**
OEM Yamaha	**3XF W0045 50**
OEM Yamaha	**4FM W0046 00**
OEM Yamaha	**4XV W0046 00**

AGPA54						
MARCA Brand	**MODELLO** Model	**CC**	**DA** From	**A** To	**ANT.** Front	**POST.** Rear
YAMAHA	**FJ 100 L, LC**	**100**	**1984**		**X**	**X**
YAMAHA	**TZR 125**	**125**	**1989**	**1992**	**X**	
YAMAHA	**TZR 125**	**125**	**1993**	**1994**		**X**
YAMAHA	**FZ 250 PHAZER N, S**	**250**	**1985**	**1986**	**X**	
YAMAHA	**RD 250 LC**	**250**	**1983**			**X**
YAMAHA	**YD 250 S**	**250**	**1990**		**X**	
YAMAHA	**RD 350 LC YPVS**	**350**	**1983**	**1984**		**X**
YAMAHA	**RZ 350 L, N, NC**	**350**	**1984**	**1985**		**X**
YAMAHA	**FZ 400 N**	**400**	**1987**		**X**	
YAMAHA	**FZR 400**	**400**	**1987**		**X**	
YAMAHA	**XJR 400 R**	**400**	**1995**			**X**
YAMAHA	**XS 400 Z**	**400**	**1983**		**X**	**X**
YAMAHA	**FZR 500 (AUSTRIA)**	**500**	**1989**		**X**	**X**
YAMAHA	**FZR 500 R (AUSTRIA)**	**500**	**1990**	**1991**		**X**
YAMAHA	**RD 500**	**500**	**1983**		**X**	**X**
YAMAHA	**RD 500 LC**	**500**	**1984**	**1986**	**X**	
YAMAHA	**RZ 500**	**500**	**1984**	**1986**	**X**	
YAMAHA	**FJ 600**	**600**	**1984**		**X**	**X**
YAMAHA	**FZ 600**	**600**	**1986**	**1987**	**X**	**X**
YAMAHA	**FZ 600 S, SC**	**600**	**1986**		**X**	
YAMAHA	**FZR 600**	**600**	**1989**		**X**	**X**
YAMAHA	**FZR 600 R**	**600**	**1990**	**1995**		**X**
YAMAHA	**XJ 600**	**600**	**1983**	**1991**	**X**	**X**

AGPA54						
MARCA Brand	**MODELLO** Model	**CC**	**DA** From	**A** To	**ANT.** Front	**POST.** Rear
YAMAHA	**YX 600 RADIAN**	**600**	**1987**	**1990**	**X**	
YAMAHA	**YZF 600 R THUNDER CAT**	**600**	**1996**	**2003**		**X**
YAMAHA	**FZ 700**	**700**	**1987**		**X**	**X**
YAMAHA	**FZX 700 FAZER**	**700**	**1987**		**X**	**X**
YAMAHA	**XJ 700**	**700**	**1986**		**X**	
YAMAHA	**XJ 700 MAXIM**	**700**	**1985**		**X**	**X**
YAMAHA	**XV 700 L, LC**	**700**	**1984**		**X**	
YAMAHA	**XV 700 VIRAGO**	**700**	**1987**		**X**	
YAMAHA	**750 MAXIM**	**750**	**1981**			**X**
YAMAHA	**FZ 750**	**750**	**1985**	**1986**	**X**	**X**
YAMAHA	**FZ 750 GENESIS**	**750**	**1986**		**X**	
YAMAHA	**FZ 750 GENESIS**	**750**	**1987**	**1988**	**X**	**X**
YAMAHA	**FZ 750 GENESIS**	**750**	**1989**	**1992**		**X**
YAMAHA	**FZR 750 R**	**750**	**1989**	**1990**		**X**
YAMAHA	**FZR 750 R GENESIS**	**750**	**1987**	**1988**		**X**
YAMAHA	**FZX 750 FAZER**	**750**	**1986**		**X**	**X**
YAMAHA	**TX 750 A**	**750**	**1973**	**1976**		**X**
YAMAHA	**VF 750 VIRAGO**	**750**	**1988**		**X**	
YAMAHA	**XJ 750**	**750**	**1983**	**1984**	**X**	**X**
YAMAHA	**XV 750**	**750**	**1989**	**1992**	**X**	
YAMAHA	**YZF 750 R, SP**	**750**	**1993**	**1997**		**X**
YAMAHA	**TDM 850**	**850**	**1991**	**2001**		**X**
YAMAHA	**TRX 850**	**850**	**1995**			**X**
YAMAHA	**TRX 850 (ITALY)**	**850**	**1995**			**X**
YAMAHA	**XJ 900**	**900**	**1983**	**1985**	**X**	**X**
YAMAHA	**XJ 900 F**	**900**	**1985**	**1993**	**X**	**X**
YAMAHA	**XJ 900 S, DIVERSION**	**900**	**1994**	**2003**		**X**
YAMAHA	**XV 920 VIRAGO**	**920**	**1981**			**X**
YAMAHA	**FZR 1000**	**1000**	**1994**	**1995**		**X**
YAMAHA	**FZR 1000 EX UP**	**1000**	**1990**	**1993**		**X**
YAMAHA	**FZR 1000 GENESIS**	**1000**	**1987**	**1989**		**X**
YAMAHA	**GTS 1000**	**1000**	**1993**	**1999**		**X**
YAMAHA	**XV 1000 L, C**	**1000**	**1984**		**X**	**X**
YAMAHA	**XV 1000 VIRAGO**	**1000**	**1986**		**X**	
YAMAHA	**YZF 1000 R THUNDERACE**	**1000**	**1996**			**X**
YAMAHA	**BT 1100 BULLDOG**	**1100**	**2002**			**X**
YAMAHA	**FJ 1100**	**1100**	**1983**	**1985**	**X**	**X**
YAMAHA	**XV 1100 VIRAGO**	**1100**	**1986**	**1993**	**X**	
YAMAHA	**XV 1100 VIRAGO**	**1100**	**1999**			**X**
YAMAHA	**XVS 1100 DRAG STAR**	**1100**	**1999**			**X**
YAMAHA	**XVS 1100 DRAG STAR CLASSIC**	**1100**	**2000**			**X**
YAMAHA	**FJ 1200**	**1200**	**1986**	**1987**	**X**	**X**
YAMAHA	**FJ 1200**	**1200**	**1988**			**X**
YAMAHA	**FJ 1200 ABS**	**1200**	**1991**	**1993**		**X**
YAMAHA	**V-MAX 1200**	**1200**	**1985**	**1992**	**X**	**X**
YAMAHA	**V-MAX 1200 SPL,E,EC,F, FC,G,GC,H, HC,J,JC**	**1200**	**1993**	**2003**		**X**
YAMAHA	**XJR 1200**	**1200**	**1994**	**1998**		**X**
YAMAHA	**XJR 1200 (ITALY)**	**1200**	**1995**	**1998**		**X**
YAMAHA	**XJR 1200 SP**	**1200**	**1997**	**1998**		**X**
YAMAHA	**XV 1200 DL, DC2**	**1200**	**1984**		**X**	**X**
YAMAHA	**XV 1200 VENTURE ROYALE**	**1200**	**1985**		**X**	**X**
YAMAHA	**XV 1200 Z12T**	**1200**	**1984**		**X**	**X**
YAMAHA	**XVT 1200 T, VENT. ROYALE**	**1200**	**1984**		**X**	**X**
YAMAHA	**XJR 1300**	**1300**	**1999**	**2001**		**X**
YAMAHA	**XJR 1300 SP**	**1300**	**2001**			**X**

PASTIGLIE BRAKE PADS

APPLICAZIONI PER CODICE PASTIGLIA / applications for pads code

MESCOLA SINTERIZZATA, ZXC, EV1 E EV2 sintered, zxc, ev1 and ev2 compounds
ST / ZXC / EV1 / EV2

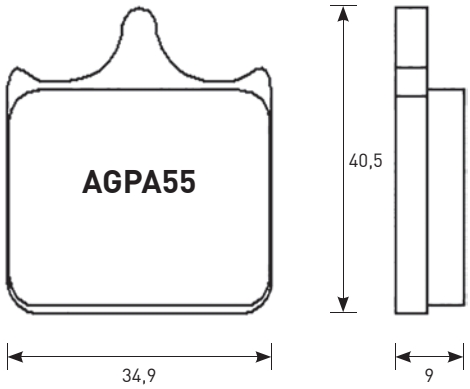

CROSS REFERENCE	
EBC	FA604
BRAKING	947
NEWFREN	.FD.0466
BREMBO	07BB33
FERODO	FDB2255
CL	1207
SBS	870

EQUIVALENT OE #	
	34117714800

AGPA55						
MARCA Brand	MODELLO Model	CC	DA From	A To	ANT. Front	POST. Rear
BMW	S 1000 R	1000	2014		X	
BMW	S 1000 RR	1000	2009	2015	X	

MESCOLA ORGANICA E SINTERIZZATA organic and sintered compound
OR / ST

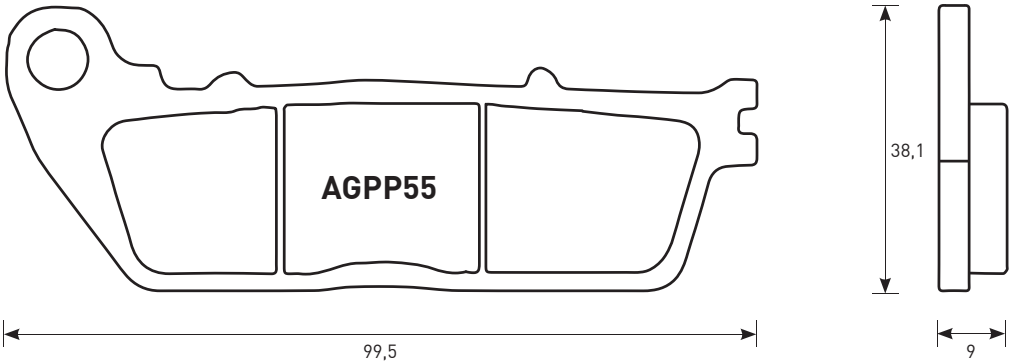

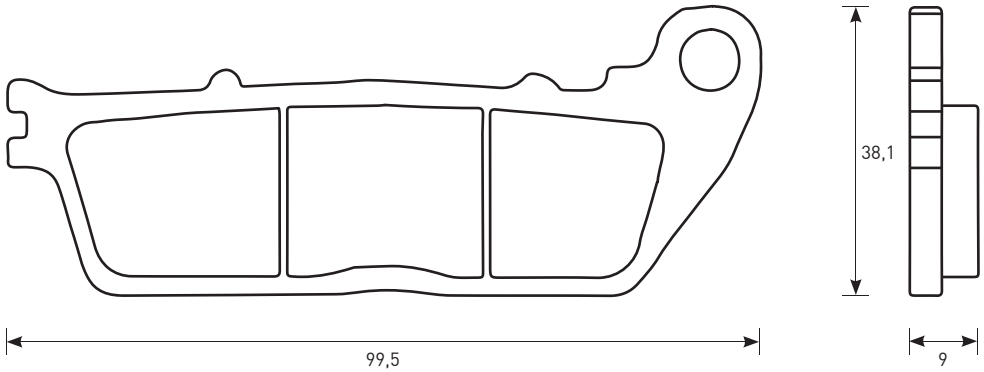

CROSS REFERENCE	
EBC	FA488
BRAKING	942
NEWFREN	.FD.0446
BREMBO	07HO13
FERODO	FDB2253
CL	1217
SBS	862

EQUIVALENT OE #	
OEM Honda	06435 MFN D01

AGPP55						
MARCA Brand	MODELLO Model	CC	DA From	A To	ANT. Front	POST. Rear
HONDA	800 CROSSRUNNER	800	2011			X
HONDA	VFR 800 F	800	2014			X
HONDA	VFR 800 X CROSSRUNNER	800	2015			X
HONDA	CB 1000 R (RAD.CAL)	1000	2008			X
HONDA	CB 1000 R ABS	1000	2008			X
HONDA	VFR 1200 F	1200	2010			X

PASTIGLIE BRAKE PADS

APPLICAZIONI PER CODICE PASTIGLIA / applications for pads code

MESCOLA SINTERIZZATA E EV1 sintered and ev1 compounds
ST / EV1

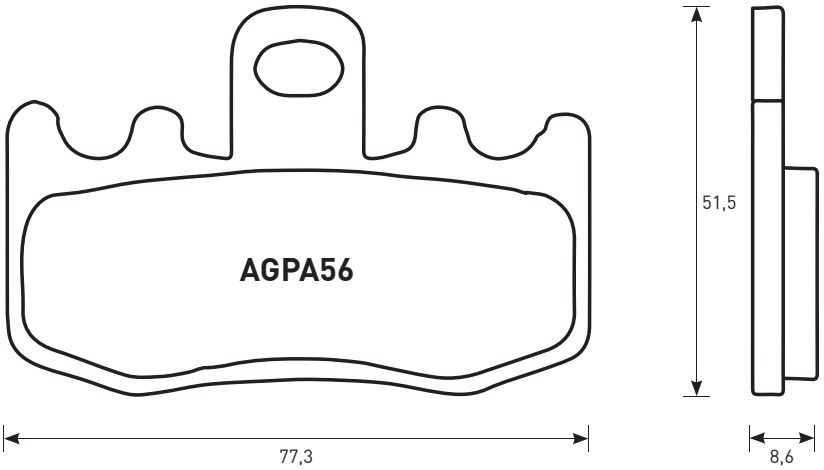

CROSS REFERENCE	
EBC	FA335
OGNIBENE	329
BRAKING	892
NEWFREN	.FD.0320
BREMBO	07BB26
FERODO	FDB2125
CL	1101
SBS	796

EQUIVALENT OE #	
OEM BMW	34 11 7 683 064
OEM BMW	34 11 7 671 780
OEM BMW	34 11 7 660 448
OEM BMW	34 11 7 690 259

AGPA56

MARCA Brand	MODELLO Model	CC	DA From	A To	ANT. Front	POST. Rear
BMW	R 850 RT WITH INTEGRAL ABS	850	2001		X	
BMW	R 1100 S WITHOUT INTEGRAL ABS	1100	2001		X	
BMW	R 1150 GS, GS ADVENTURER	1130	2002		X	

AGPA56

MARCA Brand	MODELLO Model	CC	DA From	A To	ANT. Front	POST. Rear
BMW	R 1150 RT WITH INTEGRAL ABS	1130	2001		X	
BMW	1200 HP2 MEGAMOTO	1200	2007		X	
BMW	K 1200 GT WITH INTEGRAL ABS	1200	2002	2008	X	
BMW	K 1200 RS	1200	2001	2003	X	
BMW	K 1200 S	1200	2005	2008	X	
BMW	R 1200 GS	1200	2004	2012	X	
BMW	R 1200 GS TRIPPLE BLACK 2011	1200	2011		X	
BMW	R 1200 RT	1200	2006	2013	X	
BMW	R 1200 S	1200	2006		X	
BMW	R 1200 ST	1200	2006		X	
BMW	K 1300 GT	1300	2009		X	
BMW	K 1300 S	1300	2009		X	

MESCOLA SINTERIZZATA sintered compound
ST

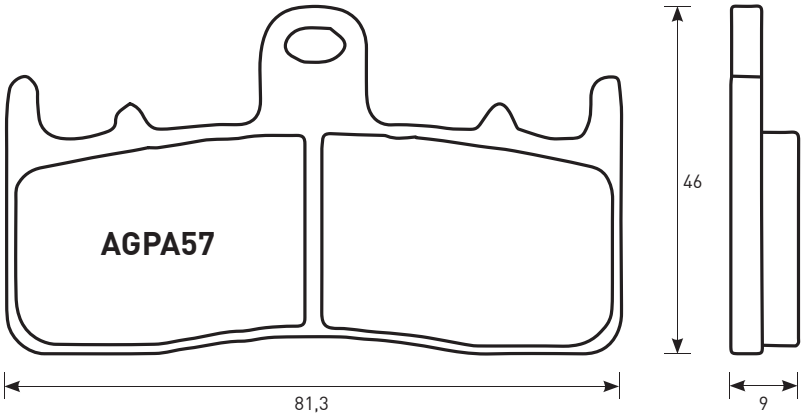

CROSS REFERENCE	
EBC	FA294
OGNIBENE	328
BRAKING	879
NEWFREN	.FD.0319
BREMBO	07GR62
FERODO	FDB2124
CL	2960
SBS	778

EQUIVALENT OE #	
OEM BMW	34 11 7 655 898
OEM BMW	34 11 7 658 386
OEM BMW	34 11 7 690 169
OEM BMW	34 11 7 690 170

AGPA57

MARCA Brand	MODELLO Model	CC	DA From	A To	ANT. Front	POST. Rear
BMW	R 850 R	850	2003		X	
BMW	R 1100 S WITH INTEGRAL ABS	1100	2001		X	
BMW	R 1150 R	1130	2001		X	
BMW	R 1150 R ROCKSTER	1130	2003		X	

AGPA57

MARCA Brand	MODELLO Model	CC	DA From	A To	ANT. Front	POST. Rear
BMW	R 1150 RS	1130	2001		X	
BMW	K 1200 LT WITH INTEGRAL ABS	1200	2001		X	
BMW	K 1200 R	1200	2005	2008	X	
BMW	K 1200 R SPORT	1200	2007		X	
BMW	R 1200 C CLASSIC	1200	2003	2004	X	
BMW	R 1200 C INDEPENDENT	1200	2003		X	
BMW	R 1200 C MONTAUK	1200	2004		X	
BMW	R 1200 CL	1200	2003		X	
BMW	R 1200 R	1200	2007	2014	X	
BMW	K 1300 R	1300	2009		X	
BMW	K 1300 R DYNAMIC	1300	2011		X	
BMW	K 1600 GT	1600	2011		X	
BMW	K 1600 GTL	1600	2011		X	

ACCOSSATO

PASTIGLIE BRAKE PADS

APPLICAZIONI PER CODICE PASTIGLIA / applications for pads code

MESCOLA ORGANICA organic compound
OR

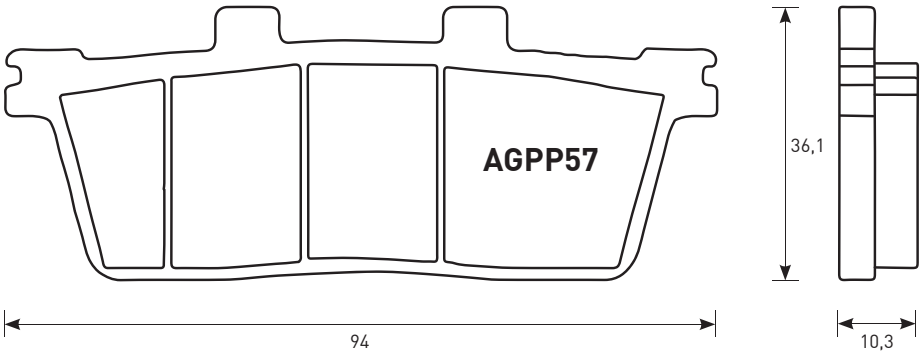

CROSS REFERENCE	
EBC	FA427
NEWFREN	.FD.0417
BREMBO	7069
FERODO	FDB2226
CL	1184
SBS	847

EQUIVALENT OE #	
OEM Sym	43105-HMA-000A
OEM Sym	43108-HMA-000A

AGPP57						
MARCA Brand	MODELLO Model	CC	DA From	A To	ANT. Front	POST. Rear
DAELIM	ST 250 SECTOR QUAD	250	2005	2006		X
E-TON	RXL 150 VIPER	150	2007			X
E-TON	VXL 250 VECTOR-ST VECTOR	250	2006			X
E-TON	VTX 300 VORTEX-ST VORTEX	300	2007			X
E-TON	VXL 300 VECTOR-ST VECTOR	300	2007			X
SYM	250 QUADLANDER	250	2006			X
SYM	300 CITY MAX	300	2006			X

MESCOLA ORGANICA, SINTERIZZATA, EV1 E EV2 organic, sintered, ev1 and ev2 compounds
OR / ST / EV1 / EV2

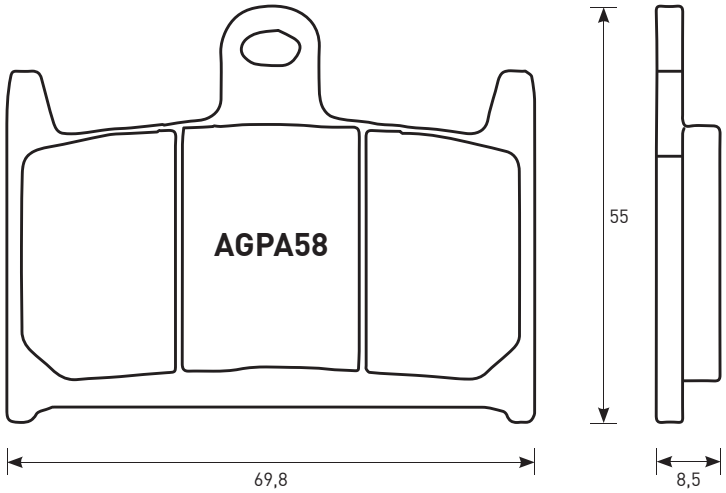

CROSS REFERENCE	
EBC	FA145
OGNIBENE	208
BRAKING	707
NEWFREN	.FD.0129
BREMBO	07SU14
FERODO	FDB557
CL	2961/2246
SBS	624

EQUIVALENT OE #	
OEM Suzuki	59300 17811
OEM Triumph	2020073T0301
OEM Triumph	T2020245

AGPA58						
MARCA Brand	MODELLO Model	CC	DA From	A To	ANT. Front	POST. Rear
MZ	S 1000 (MUZ)	1000	2003		X	
MZ	SF 1000 (MUZ)	1000	2005		X	
MZ	SFX 1000 (MUZ)	1000	2007		X	
MZ	SN 1000 (MUZ)	1000	2005		X	

AGPA58						
MARCA Brand	MODELLO Model	CC	DA From	A To	ANT. Front	POST. Rear
MZ	ST 1000 (MUZ)	1000	2007		X	
SUZUKI	RGV 250 R	250	1988		X	
SUZUKI	GSX-R 400R	400	1990	1995	X	
SUZUKI	GSX-R 750	750	1988		X	
SUZUKI	GSX-R 750 F	750	1989	1991	X	
SUZUKI	GSX-R 750 W	750	1992	1993	X	
SUZUKI	GSX 1100 F	1100	1993		X	
SUZUKI	GSX 1100 KATANA	1100	1993		X	
SUZUKI	GSX-R 1100 K-N	1100	1989	1992	X	
SUZUKI	GSF 1200 BANDIT	1200	1995	1996	X	
TRIUMPH	600 DAYTONA	600	2004		X	
TRIUMPH	600 SPEED FOUR	600	2003		X	
TRIUMPH	TT 600	600	2000	2003	X	

PASTIGLIE BRAKE PADS

APPLICAZIONI PER CODICE PASTIGLIA / applications for pads code

ACCOSSATO

AGPA58						
MARCA Brand	**MODELLO** Model	**CC**	**DA** From	**A** To	**ANT.** Front	**POST.** Rear
TRIUMPH	650 DAYTONA	650	2005		X	
TRIUMPH	750 DAYTONA	750	1991	1992	X	
TRIUMPH	900 DAYTONA	900	1991	1994	X	
TRIUMPH	900 DAYTONA, SPRINT	900	1994		X	
TRIUMPH	900 SPEED TRIPLE	900	1994		X	
TRIUMPH	900 TROPHY	900	1996		X	
TRIUMPH	T509 900 SPEED TRIPLE	900	1997	1998	X	
TRIUMPH	T595 950 DAYTONA	950	1996	1998	X	
TRIUMPH	955 DAYTONA	955	1999		X	
TRIUMPH	955 DAYTONA CENTENNIAL	955	2002		X	
TRIUMPH	955 SPEED TRIPLE	955	1999		X	
TRIUMPH	955 SPRINT RS	955	2000		X	
TRIUMPH	955 SPRINT ST	955	1999	2004	X	
TRIUMPH	1000 DAYTONA	1000	1991	1995	X	
TRIUMPH	1050 SPRINT GT ABS	1050	2011		X	
TRIUMPH	1050 SPRINT ST	1050	2005		X	
TRIUMPH	1200 DAYTONA	1200	1991		X	

AGPA58						
MARCA Brand	**MODELLO** Model	**CC**	**DA** From	**A** To	**ANT.** Front	**POST.** Rear
TRIUMPH	1200 TIGER EXPLORER	1200	2012		X	
TRIUMPH	1200 TROPHY	1200	1996	2003	X	
TRIUMPH	1600 THUNDERBIRD	1600	2009		X	
TRIUMPH	1700 THUNDERBIRD COMMANDER	1700	2014		X	
TRIUMPH	1700 THUNDERBIRD LT	1700	2014		X	
TRIUMPH	1700 THUNDERBIRD STORM	1700	2011		X	
TRIUMPH	2300 ROCKET III	2294	2004		X	
TRIUMPH	2300 ROCKET III CLASSIC	2294	2007		X	
TRIUMPH	2300 ROCKET III ROADSTER	2294	2010		X	
TRIUMPH	2300 ROCKET III TOURING	2294	2013		X	
TRIUMPH	2300 ROCKET X	2294	2015		X	
YAMAHA	TZ 125	125	1997		X	
YAMAHA	TZ 250	250	1990	2001	X	
YAMAHA	TZ 250 (RAD.CAL)	250	2002		X	
YAMAHA	FZR 750 R	750	1989	1990	X	

MESCOLA ORGANICA E SINTERIZZATA organic and sintered compound
OR / ST

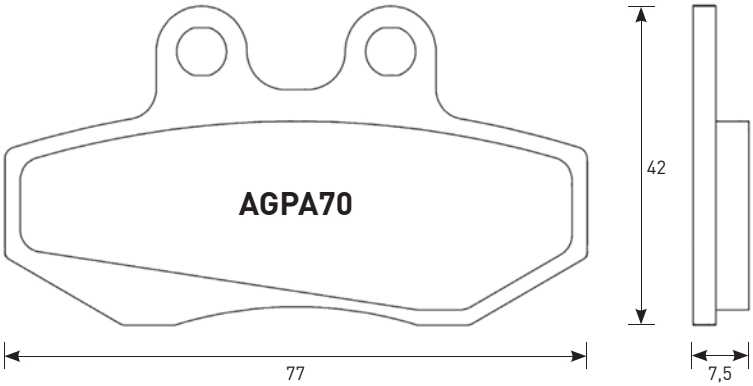

CROSS REFERENCE	
EBC	**FA167**
OGNIBENE	**171**
BRAKING	**741**
NEWFREN	**.FD.0162**
BREMBO	**07GR14**
FERODO	**FDB706**
CL	**1144/3069**
SBS	**652/148**

EQUIVALENT OE #	
OEM Aprilia	**8113478**

AGPA70						
MARCA Brand	**MODELLO** Model	**CC**	**DA** From	**A** To	**ANT.** Front	**POST.** Rear
APRILIA	CLASSIC 125	125	1996		X	
APRILIA	PEGASO 125	125	1990	1991	X	
APRILIA	RED ROSE 125	125	1990		X	
APRILIA	TUAREG 125 RALLY	125	1992		X	
APRILIA	TUAREG 125 WIND	125	1990		X	
BETA	RR 50 ENDURO	50	1999		X	
BETA	RR 50 PRO RACE	50	1998		X	
BETA	RR 50 STANDARD	50	1999		X	
BETA	RR 50 SUPERMOTARD	50	1999	2003	X	
BULTACO	50 ASTRO	50	2001		X	
BULTACO	50 LOBITO	50	1999		X	
DERBI	50 SENDA R DRD	50	2003		X	
DERBI	GPR 50 R	50	1998		X	
DERBI	125 ATMOSPHERE	125	1999		X	
DERBI	180 PREDATOR	180	1999		X	
GASGAS	EC 50 ROOKIE	50	2001	2004	X	

AGPA70						
MARCA Brand	**MODELLO** Model	**CC**	**DA** From	**A** To	**ANT.** Front	**POST.** Rear
GASGAS	SM 50 ROOKIE	50	2001		X	
GILERA	FX 125 RUNNER	125	1997	1999	X	
GILERA	FX 150 RUNNER	150	1997		X	
GILERA	FXR 180 RUNNER	180	1997		X	
GILERA	FX 200 RUNNER	200	1997	1998	X	
HRD	50 SONIC 2 SUPERMOTARD	50	2000	2002	X	
HRD	50 SONIC 2 TRAIL	50	2000	2002	X	
HRD	50 GS ENDURO	50	2000	2002	X	
HRD	125 SUPERMOTARD	125	2000	2002	X	
HRD	125 TRAIL	125	2000	2002	X	
HUSQVARNA	SM 50	50	2002		X	
HUSQVARNA	WR 50	50	2002		X	
ITALJET	SM 50	50	2002		X	
ITALJET	SM 125	125	2002		X	
MOTORHISPANIA	RX 50 RACING	50	2000		X	
PEUGEOT	XR 6 50 RACE SPEC	50	2002	2007	X	
RIEJU	50 RACING SPEC. EDITION	50	2001		X	
RIEJU	50 SPIKE RACING	50	2002		X	
RIEJU	MRX 50 PRO	50	2005		X	
RIEJU	SMX 50	50	2002		X	
RIEJU	MRX 125	125	2003		X	
RIEJU	SMX 125	125	2003		X	
SHERCO	50 SUPERMOTARD, ENDURO	50	2002	2006	X	
SIAMOTO	125 BD, KD	125	2002		X	
SIAMOTO	125 SM	125	2001		X	
TOMOS	SE 50	50	2005		X	

ACCOSSATO

PASTIGLIE BRAKE PADS

APPLICAZIONI PER CODICE PASTIGLIA / applications for pads code

MESCOLA ORGANICA E SINTERIZZATA organic and sintered compound
OR / ST

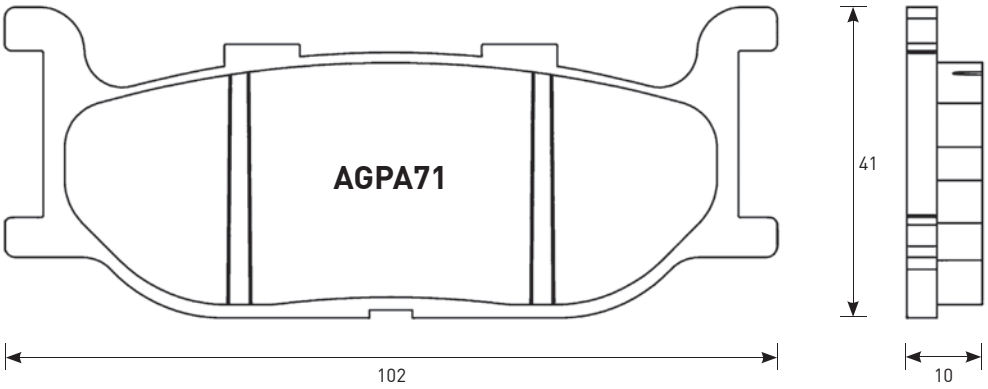

CROSS REFERENCE	
EBC	FA179
OGNIBENE	233
BRAKING	750
NEWFREN	.FD.0183
BREMBO	07YA27
FERODO	FDB781
CL	2391/3058
SBS	663/170

EQUIVALENT OE #	
OEM Yamaha	4WM W0045 00
OEM Yamaha	5BN W0045 00
OEM Yamaha	4KM W0045 00
OEM Yamaha	4BP W0045 00
OEM Yamaha	3LP W0045 00
OEM Yamaha	5S7 W0045 00

AGPA71						
MARCA Brand	MODELLO Model	CC	DA From	A To	ANT. Front	POST. Rear
YAMAHA	FZX 250 ZEAL	250	1991	1992	X	
YAMAHA	SRV 250	250	1992	1997	X	
YAMAHA	XJ 400 DIVERSION	400	1991		X	
YAMAHA	YP 400 MAJESTY	400	2004		X	
YAMAHA	XP 500 TMAX	500	2001	2003	X	
YAMAHA	XV 535 DX VIRAGO	534	1998	2003	X	
YAMAHA	XV 535 S VIRAGO	534	1996	2003	X	
YAMAHA	XJ 600 N	600	1991	1997	X	
YAMAHA	XJ 600 S DIVERSION	600	1991	1997	X	
YAMAHA	XVS 650 A DRAG STAR CLASSIC	650	1998		X	
YAMAHA	XVS 650 DRAG STAR	650	1997		X	
YAMAHA	XV 750 VIRAGO	750	1994		X	
YAMAHA	XJ 900 S, DIVERSION	900	1994	2003	X	
YAMAHA	XV 950 BOLT	950	2014		X	
YAMAHA	XV 950 BOLT C-SPEC	950	2015		X	
YAMAHA	XV 950 BOLT R-SPEC	950	2014		X	
YAMAHA	XVS 950 A MIDNIGHT STAR	950	2009		X	
YAMAHA	XV 1100 VIRAGO	1100	1994	1998	X	
YAMAHA	XVS 1300 STRYKER	1300	2011		X	
YAMAHA	XVZ 1300 TF ROYAL STAR VENTURE	1300	1999		X	
YAMAHA	XV 1600 A WILD STAR	1600	1999		X	

PASTIGLIE BRAKE PADS

APPLICAZIONI PER CODICE PASTIGLIA / applications for pads code

MESCOLA ORGANICA, SINTERIZZATA, EV1 E EV2 organic, sintered, ev1 and ev2 compounds
OR / ST / EV1 / EV2

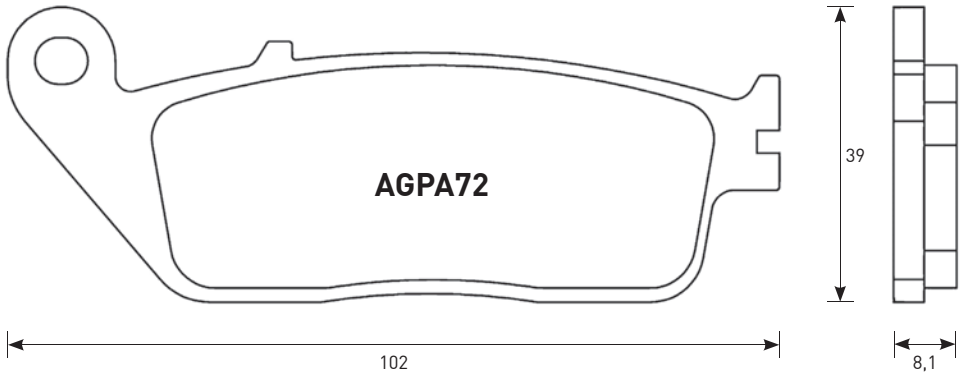

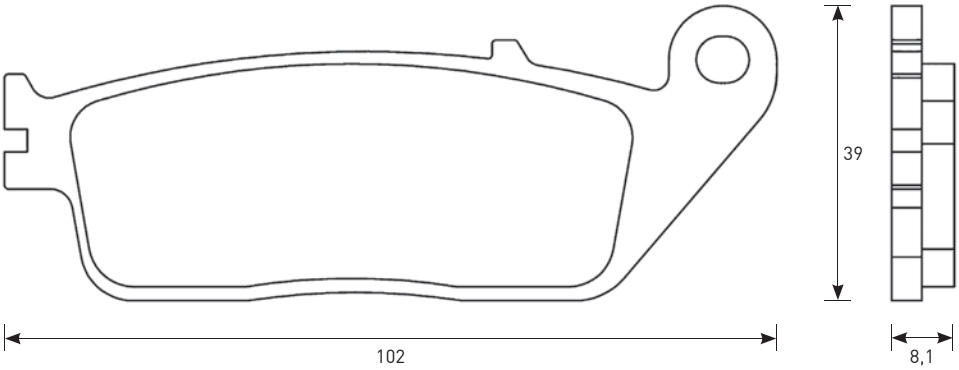

CROSS REFERENCE	
EBC	**FA142**
OGNIBENE	**202**
BRAKING	**716**
NEWFREN	**.FD.0132**
BREMBO	**07HO30**
FERODO	**FDB2225**
CL	**2256/3003**
SBS	**627/183**

EQUIVALENT OE #	
OEM Yamaha	**5NW W0045 00 (until 2010)**
OEM Yamaha	**4P9 W0045 00 (from 2011)**

AGPA72						
MARCA Brand	**MODELLO** Model	**CC**	**DA** From	**A** To	**ANT.** Front	**POST.** Rear
BUELL	**BLAST 500**	**500**	**2001**	**2009**	**X**	
BMW	**C EVOLUTION**		**2012**		**X**	**X**
BMW	**C 600 SPORT**	**600**	**2012**		**X**	**X**
BMW	**C 650 GT**	**650**	**2012**		**X**	**X**
CAGIVA	**900 CAT**	**900**	**1993**		**X**	
CAGIVA	**GRAN CANYON 900**	**900**	**1999**		**X**	
CAGIVA	**NAVIGATOR 1000**	**1000**	**2000**		**X**	
DAELIM	**125 S2**	**125**	**2006**		**X**	
DAELIM	**250 S2**	**250**	**2006**		**X**	
HONDA	**125 FORZA**	**125**	**2015**		**X**	
HONDA	**RS 125 R**	**125**	**1991**	**1994**	**X**	
HONDA	**SH 125**	**125**	**2013**		**X**	
HONDA	**SH 150**	**150**	**2013**		**X**	
HONDA	**250 STEED**	**250**	**1993**		**X**	
HONDA	**CB 250**	**250**	**1992**	**2005**	**X**	
HONDA	**CBR 250 NIGHTHAWK**	**250**	**1992**		**X**	
HONDA	**CBR 250 R (NISSIN CAL)**	**250**	**2011**	**2013**	**X**	
HONDA	**CBR 250 R, RR**	**250**	**1990**		**X**	

AGPA72						
MARCA Brand	**MODELLO** Model	**CC**	**DA** From	**A** To	**ANT.** Front	**POST.** Rear
HONDA	**CBR 250 RJ**	**250**	**1988**		**X**	
HONDA	**CN 250 HELIX (FUSION)**	**250**	**1993**		**X**	
HONDA	**VT 250 SPADA**	**250**	**1989**		**X**	
HONDA	**SH 300 I SH30**	**300**	**2015**		**X**	
HONDA	**CB-1 400 (CB 400 F)**	**400**	**1989**	**1990**	**X**	
HONDA	**CBR 400 RR**	**400**	**1987**	**1989**	**X**	
HONDA	**NV 400 STEED**	**400**	**1991**	**1993**	**X**	
HONDA	**CB 500**	**500**	**1994**	**1996**	**X**	
HONDA	**600 STEED**	**600**	**1992**		**X**	
HONDA	**CB 600 HORNET**	**600**	**1998**	**2007**	**X**	
HONDA	**CBF 600**	**600**	**2004**	**2007**	**X**	
HONDA	**CBR 600 F**	**600**	**2011**		**X**	
HONDA	**CBR 600 F3**	**600**	**1995**	**1998**	**X**	
HONDA	**VT 600 C, SHADOW**	**600**	**1994**	**2000**	**X**	
HONDA	**VT 600 CD SHADOW VLX**	**600**	**1994**	**2000**	**X**	
HONDA	**FMX 650**	**650**	**2005**	**2008**	**X**	
HONDA	**NT 650 HAWK GT**	**650**	**1988**	**1991**	**X**	
HONDA	**NTV 650 REVERE**	**650**	**1988**	**1993**	**X**	
HONDA	**NC 700 S**	**700**	**2012**	**2013**	**X**	
HONDA	**NC 700 X**	**700**	**2012**	**2013**	**X**	
HONDA	**VFR 700 F INTERCEPTOR**	**700**	**1988**	**1989**	**X**	
HONDA	**CB 750 N, F, SEVEN FIFTY**	**750**	**1992**		**X**	
HONDA	**VFR 750 F**	**750**	**1988**	**1990**	**X**	
HONDA	**PC 800 PACIFIC COAST**	**800**	**1989**	**1997**	**X**	
HONDA	**VFR 950 F, CARAT**	**950**	**1992**		**X**	
HONDA	**CBR 1000 F**	**1000**	**1989**	**1992**	**X**	
HONDA	**VFR 1000**	**1000**	**1989**		**X**	
HONDA	**ST 1100**	**1100**	**1990**	**2002**	**X**	

ACCOSSATO

PASTIGLIE BRAKE PADS

APPLICAZIONI PER CODICE PASTIGLIA / applications for pads code

AGPA72						
MARCA Brand	MODELLO Model	CC	DA From	A To	ANT. Front	POST. Rear
HONDA	ST 1100 ABS-TCS	1100	1992	1995	X	
HONDA	VT 1100 C SHADOW	1100	1994	1996		
HONDA	VT 1100 C2 SHADOW A. C . E.	1100	1995		X	
HONDA	VT 1100 C2 Y	1100	2000		X	
HONDA	VT 1100 C3 SHADOW AERO	1100	1998		X	
HONDA	VT 1100 T SHADOW	1100	1998		X	
HONDA	VT 1300 FURY	1300	2010		X	
HONDA	VTX 1300 C	1300	2004		X	
HONDA	VTX 1300 S	1300	2003		X	
HONDA	GL 1500 F6 C VALKYRIE	1500	1996	2002	X	
HYOSUNG	125 V2	125	1999		X	
HYOSUNG	250 AQUILA	250	2000		X	
KAWASAKI	J 300	300	2014		X	
KAWASAKI	Z 750 , ABS	750	2007		X	
KAWASAKI	Z 800	800	2015		X	
KAWASAKI	Z 800 E	800	2015		X	
KYMCO	125 DOWNTOWN I	125	2010		X	
KYMCO	125 G-DINK	125	2012		X	
KYMCO	125 SUPER DINK	125	2010		X	
KYMCO	200 DOWNTOWN I	200	2010		X	
KYMCO	250 XCITING	250	2004	2005	X	X
KYMCO	250 VENOX	250	2001		X	X
KYMCO	250 XCITING	250	2006		X	
KYMCO	300 DOWNTOWN I	300	2010		X	
KYMCO	300 G-DINK	300	2012		X	
KYMCO	300 PEOPLE GTI	300	2010		X	
KYMCO	300 XCITING RI	300	2008		X	
KYMCO	500 XCITING	500	2004		X	
KYMCO	500 XCITING I EVO ABS	500	2011		X	
KYMCO	500 XCITING R ABS	500	2009		X	
KYMCO	700 MYROAD, ABS	700	2009		X	
PEUGEOT	50 DJANGO HERITAGE	50	2014		X	
PEUGEOT	125 DJANGO HERITAGE	125	2014		X	
PEUGEOT	125 SATELIS ABS	125	2004		X	
PEUGEOT	150 DJANGO HERITAGE	150	2014		X	
PEUGEOT	400 GEOPOLIS RS	400	2008		X	
PEUGEOT	400 SATELIS I	400	2014		X	
PEUGEOT	500 SATELIS	500	2007		X	
PEUGEOT	600 SATELIS ABS	600	2004		X	
SUZUKI	250 IMPULSE	250	1995		X	
SUZUKI	GW 250 INAZUMA	250	2012		X	
SUZUKI	GW 250 INAZUMA F	250	2010		X	
SUZUKI	GSX 400 IMPULSE	400	1994	1996	X	
SUZUKI	RF 400 RVC	400	1993	1997	X	
SUZUKI	GSF 600 N, S BANDIT	600	1995	1999	X	
SUZUKI	RF 600 R	600	1993	1996	X	

AGPA72						
MARCA Brand	MODELLO Model	CC	DA From	A To	ANT. Front	POST. Rear
SUZUKI	AN 650 A BURGMAN EXECUTIVE	650	2004	2012	X	
SUZUKI	AN 650 BURGMAN	650	2002		X	
SUZUKI	AN 650 Z BURGMAN EXECUTIVE	650	2013		X	
SUZUKI	C 1500 T INTRUDER	1500	2013		X	
SWM	440 GRAN MILANO	440	2015		X	
SWM	440 GRAN TURISMO	440	2015		X	
SWM	440 SILVER VASE	440	2015		X	
TRIUMPH	675 STREET TRIPLE	675	2008	2013	X	
TRIUMPH	800 AMERICA	800	2003	2006	X	
TRIUMPH	800 BONNEVILLE	800	2001	2004	X	
TRIUMPH	800 BONNEVILLE AMERICA	800	2002		X	
TRIUMPH	800 BONNEVILLE T100 CENTENNIAL EDITION	800	2002	2004	X	
TRIUMPH	800 BONNEVILLE T100 PAUL SMITH	800	2006	2008	X	
TRIUMPH	800 SPEEDMASTER	800	2003	2004	X	
TRIUMPH	800 TIGER	800	2011	2014	X	
TRIUMPH	800 TIGER XC	800	2011	2015	X	
TRIUMPH	800 TIGER XC ABS	800	2012	2014	X	
TRIUMPH	800 TIGER XCR	800	2015		X	
TRIUMPH	800 TIGER XR	800	2015		X	
TRIUMPH	800 TIGER XRX	800	2015		X	
TRIUMPH	900 ADVENTURER	900	1996		X	
TRIUMPH	900 AMERICA	900	2007		X	
TRIUMPH	900 BONNEVILLE	900	2005	2009	X	
TRIUMPH	900 BONNEVILLE NEWCHURCH	900	2015		X	
TRIUMPH	900 BONNEVILLE SE	900	2009		X	
TRIUMPH	900 BONNEVILLE SPIRIT	900	2015		X	
TRIUMPH	900 BONNEVILLE T100	900	2005	2009	X	
TRIUMPH	900 BONNEVILLE T214	900	2015		X	
TRIUMPH	900 LEGEND TT	900	1999		X	
TRIUMPH	900 SCRAMBLER	900	2006		X	
TRIUMPH	900 SPEEDMASTER	900	2005		X	
TRIUMPH	900 THRUXTON	900	2004		X	
TRIUMPH	900 THRUXTON ACE	900	2015		X	
TRIUMPH	900 THUNDERBIRD	900	1996		X	
TRIUMPH	900 THUNDERBIRD SPORT	900	2003		X	
TRIUMPH	900 TIGER	900	1999	2000	X	
TRIUMPH	955 TIGER	955	2001	2004	X	X
TRIUMPH	955 TIGER	955	2004	2006	X	
VOXAN	1000 SCRAMBLER	1000	2001	2003	X	
YAMAHA	WR 125 R, XY	125	2009		X	
YAMAHA	WR 250 X	125	2008		X	

PASTIGLIE BRAKE PADS

APPLICAZIONI PER CODICE PASTIGLIA / applications for pads code

MESCOLA ORGANICA, SINTERIZZATA, E STMX organic, sintered and stmx compounds
OR / ST / STMX

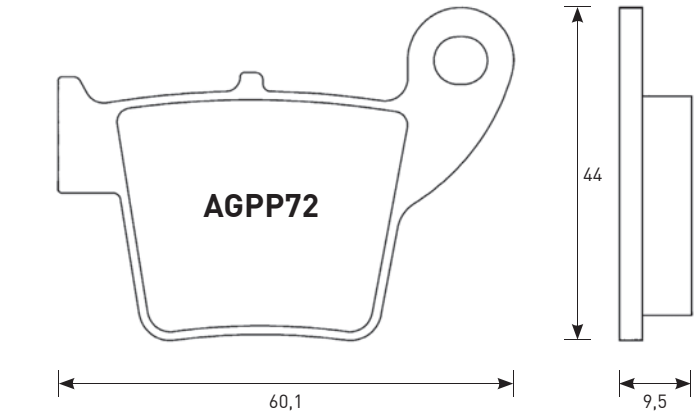

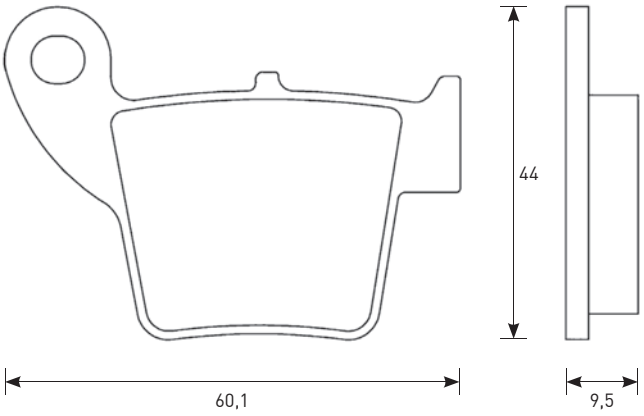

CROSS REFERENCE	
EBC	FA346
BRAKING	886
NEWFREN	.FD.0329
BREMBO	07HO48SD-SX
FERODO	FDB2139
CL	1076
SBS	777

EQUIVALENT OE #	
OEM Honda	06435 KRN 712
OEM Honda	06435 KZ4 J41

AGPP72						
MARCA Brand	MODELLO Model	CC	DA From	A To	ANT. Front	POST. Rear
BRAKING	REAR CROSS (1 PISTON)					X
FANTIC	50 CABALLERO MOTARD	50	2010			X

AGPP72						
MARCA Brand	MODELLO Model	CC	DA From	A To	ANT. Front	POST. Rear
FANTIC	50 CABALLERO REGOLARITA	50	2010			X
FANTIC	125 CABALLERO ENDURO 2T	125	2012			X
FANTIC	125 CABALLERO MOTARD 2T	125	2010			X
FANTIC	125 CABALLERO MOTARD 4T	125	2010			X
FANTIC	125 CABALLERO REGOLARITA 4T	125	2010			X
FANTIC	200 CABALLERO MOTARD 4T	200	2010			X
FANTIC	200 CABALLERO REGOLARITA 4T	200	2010			X
HM	CR 125 SUPERMOTARD	125	2004	2006		X
HM	CRE 125 ENDURO	125	2002			X
HM	CRM 125 X SUPERMOTARD	125	2007			X
HM	CRE 250 ENDURO	250	2002			X
HM	CRE 250 F ENDURO	250	2004			X
HM	CRE 250 SUPERMOTARD	250	2004	2007		X
HM	CRE 250 X ENDURO	250	2004			X
HM	CRF 250 SUPERMOTARD	250	2004	2006		X
HM	CRM 250 X SUPERMOTARD	250	2007			X
HM	CRE 450 F ENDURO	450	2002			X
HM	CRE 450 X ENDURO	450	2004			X
HM	CRF 450 SUPERMOTARD	450	2002	2006		X
HM	CRM 450 X SUPERMOTARD	450	2007			X
HM	CRM 500 X SUPERMOTARD	500	2007			X
HONDA	CR 125	125	2002	2007		X
HONDA	CRE 125	125	2002			X
HONDA	CRF 150 R	150	2007			X
HONDA	CR 250	250	2002	2007		X
HONDA	CRE 250	250	2002			X
HONDA	CRE 250 F	250	2004			X
HONDA	CRF 250 R	250	2004	2009		X
HONDA	CRF 250 R EFI	250	2010	2013		X
HONDA	CRF 250 R EFI	250	2014			X
HONDA	CRF 250 X	250	2004			X
HONDA	CRE 450 F	450	2002			X
HONDA	CRF 450 EFI	450	2009	2012		X
HONDA	CRF 450 R	450	2002	2008		X
HONDA	CRF 450 R EFI	450	2013			X
HONDA	CRF 450 X	450	2005			X
MEGELLI	125 M, R, S	125	2008			X
SUZUKI	RME 50	50	2010			X
TM	85		2013			X

ACCOSSATO

PASTIGLIE BRAKE PADS

APPLICAZIONI PER CODICE PASTIGLIA / applications for pads code

MESCOLA ORGANICA, SINTERIZZATA, EV1 E EV2 organic, sintered, ev1 and ev2 compounds
OR / ST / EV1 / EV2

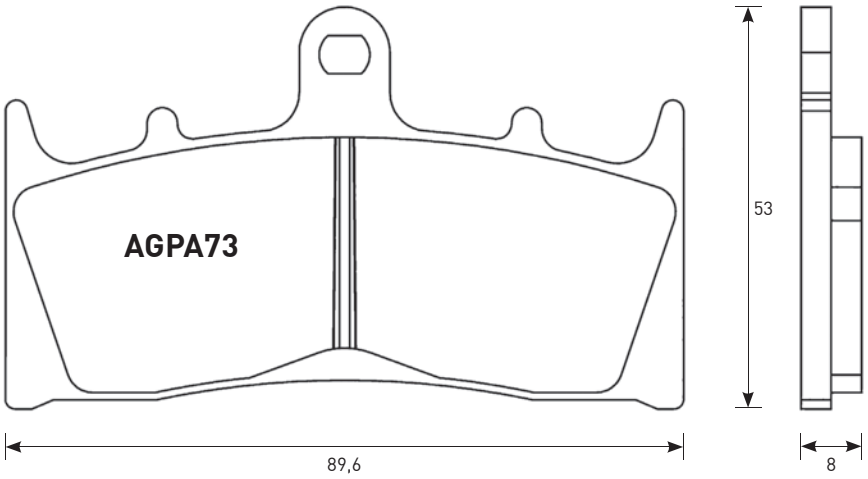

CROSS REFERENCE	
EBC	FA188
OGNIBENE	248
BRAKING	764
NEWFREN	.FD.0199
BREMBO	07SU19
FERODO	FDB873
CL	2255
SBS	686

EQUIVALENT OE #	
OEM Kawasaki	43082 1224
OEM Kawasaki	43082 1227
OEM Kawasaki	43082 1230
OEM Kawasaki	43082 1199
OEM Kawasaki	43082 1250
OEM Kawasaki	43082 1252
OEM Kawasaki	43082 1253
OEM Kawasaki	43082 1259
OEM Kawasaki	43082 1272
OEM Kawasaki	43082 1251
OEM Kawasaki	43082 1274
OEM Kawasaki	43082 1179
OEM Suzuki	59301 33890
OEM Suzuki	59130 46E00
OEM Suzuki	59300 33890
OEM Suzuki	59301 33870
OEM Suzuki	59300 46840

AGPA73						
MARCA Brand	MODELLO Model	CC	DA From	A To	ANT. Front	POST. Rear
JAY BRAKE	4 PISTON CALIPER A4					
KAWASAKI	6R 600 NINJA	600	1998	2001	X	
KAWASAKI	ZX-6R 636 NINJA	636	2002		X	

AGPA73						
MARCA Brand	MODELLO Model	CC	DA From	A To	ANT. Front	POST. Rear
KAWASAKI	ZX-7R 750 NINJA	750	1996	2003	X	
KAWASAKI	P1-P8				X	
KAWASAKI	ZX-9R 900 NINJA	900	1996		X	
KAWASAKI	ZX-9R 900 NINJA	900	1997	2001	X	
KAWASAKI	ZRX 1100	1100	1996	2000	X	
KAWASAKI	ZRX 1200	1200	2001		X	
KAWASAKI	ZRX 1200 R	1200	2001		X	
KAWASAKI	ZRX 1200 S	1200	2001		X	
KAWASAKI	ZX-12R 1200 NINJA	1200	2000	2003	X	
KAWASAKI	VN 1500 MEAN STREAK	1500	2002	2003	X	
KAWASAKI	VN 1600 MEAN STREAK	1600	2004		X	
SUZUKI	GSX-R 750	750	1994	1999	X	
SUZUKI	GSX-R 1000	1000	2001	2002	X	
SUZUKI	TL 1000 RW	1000	1998	2002	X	
SUZUKI	GSX-R 1100 WP,WR, WS,WT,WV	1100	1993	1997	X	
SUZUKI	GSF 1200 BANDIT	1200	2001	2005	X	
SUZUKI	GSF 1200 S BANDIT	1200	2001	2005	X	
SUZUKI	GSX-R 1300 HAYABUSA	1300	1999	2007	X	
SUZUKI	GSX 1400 TEST	1400	2002		X	
SUZUKI	VZ 1600 MARAUDER	1600	2004		X	

PASTIGLIE BRAKE PADS

APPLICAZIONI PER CODICE PASTIGLIA / applications for pads code

MESCOLA ORGANICA E SINTERIZZATA organic and sintered compound
OR / ST

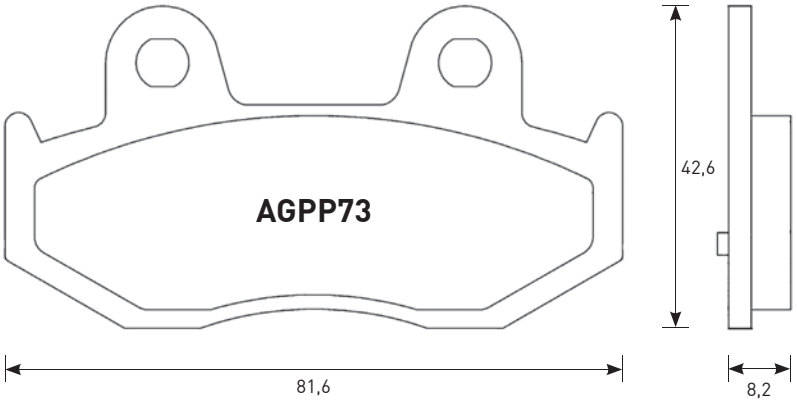

CROSS REFERENCE	
EBC	**FA411**
NEWFREN	**.FD.0326**
BREMBO	**7055**
FERODO	**FDB2132**
CL	**3074**
SBS	**781/174**

EQUIVALENT OE #	
6910004860	**6910014890**

AGPP73						
MARCA Brand	**MODELLO** Model	**CC**	**DA** From	**A** To	**ANT.** Front	**POST.** Rear
KAWASAKI	**SC 250 EPSILON**	**250**	**2002**			**X**
SUZUKI	**AN 250 BURGMAN BUSINESS**	**250**	**2004**	**2006**		**X**
SUZUKI	**AN 400 BURGMAN BUSINESS**	**400**	**2001**	**2006**		**X**

MESCOLA ORGANICA E SINTERIZZATA organic and sintered compound
OR / ST

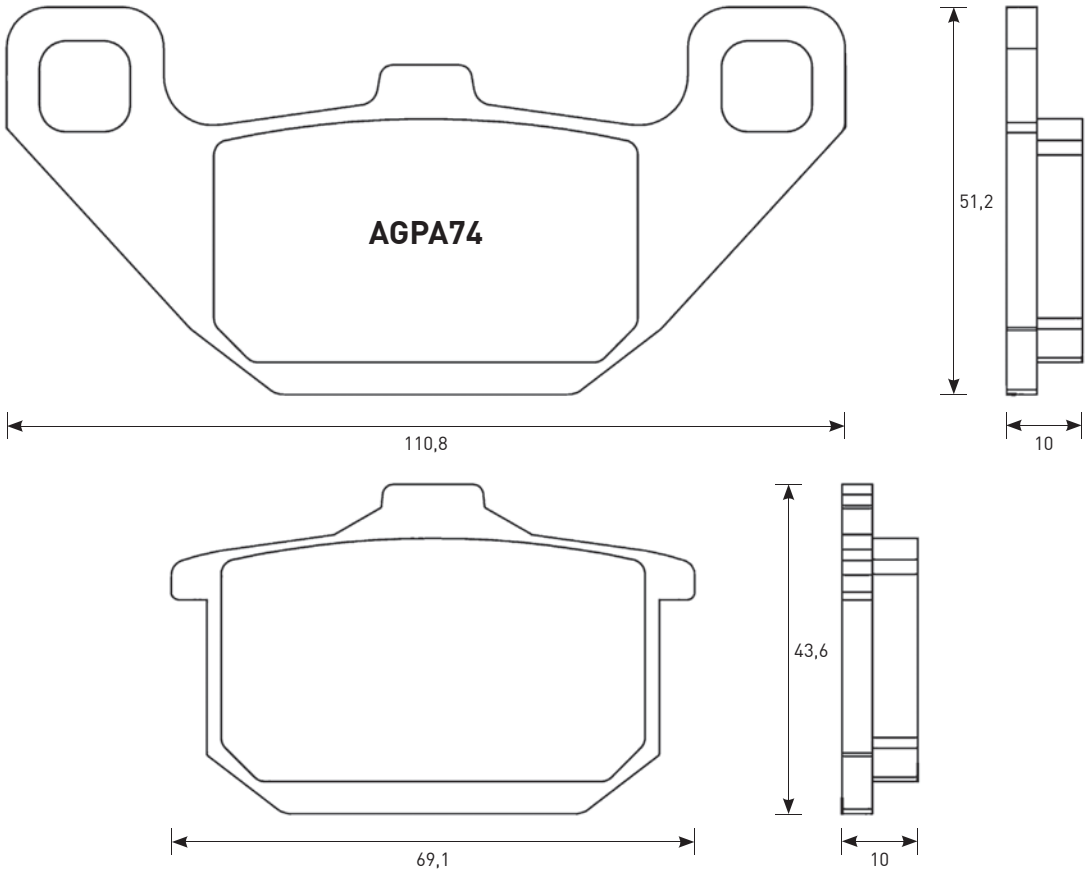

ACCOSSATO

PASTIGLIE BRAKE PADS

APPLICAZIONI PER CODICE PASTIGLIA / applications for pads code

CROSS REFERENCE	
EBC	FA085
OGNIBENE	241
BRAKING	662
NEWFREN	.FD.0072
BREMBO	07KA0808
FERODO	FDB339
CL	2328
SBS	557

EQUIVALENT OE #	
OEM Kawasaki	43082 1167
OEM Kawasaki	43082 1080
OEM Kawasaki	43082 1030
OEM Kawasaki	43082 1062
OEM Kawasaki	43082 1194

AGPA74						
MARCA Brand	MODELLO Model	CC	DA From	A To	ANT. Front	POST. Rear
HYOSUNG	GA-4 50	50	1999		X	
HYOSUNG	GA 300	300	1998		X	
KAWASAKI	EL 250 ALL MODELS	250	1987	1994	X	
KAWASAKI	ER 250 (Z 250 T SCORPION)	250	1983	1988	X	
KAWASAKI	EX 250 NINJA	250	1986	1987	X	X
KAWASAKI	GPZ 250	250	1985			X
KAWASAKI	LX 250 ELIMINATOR - SE	250	1990		X	
KAWASAKI	Z 250 GP BELT DRIVE	250	1983		X	
KAWASAKI	Z 250	250	1983		X	
KAWASAKI	EL 252	252	1997	2000	X	
KAWASAKI	GPX 400	400	1985			X
KAWASAKI	GPZ 400	400	1985			X
KAWASAKI	KLE 400 VULCAN	400	1990		X	
KAWASAKI	VN 400 VULCAN	400	1995		X	
KAWASAKI	Z 400 F2	400	1985			X
KAWASAKI	ZL 400	400	1986	1987	X	
KAWASAKI	ZL 400 ELIMINATOR	400	1988	1992	X	X
KAWASAKI	ZL 400 ELIMINATOR	400	1993			X
KAWASAKI	ZX 400 C2	400	1985			X
KAWASAKI	Z 454 LTD LIQUID COOLED	454	1986	1989	X	
KAWASAKI	EN 500 ALL MODELS	500	1990	2004	X	
KAWASAKI	GPZ 500 S	500	1987		X	
KAWASAKI	GPZ 500 S	500	1989	1992		X
KAWASAKI	Z 550 GP	550	1984		X	X
KAWASAKI	GPZ 600 R	600	1985		X	X
KAWASAKI	ZL 600 A1/A2	600	1985	1994	X	
KAWASAKI	VN 700 A2-A10	700	1986	1994	X	
KAWASAKI	VN 700 VULCAN	700	1985		X	
KAWASAKI	750 TURBO	750	1985		X	X
KAWASAKI	750 BELT DRIVE	750	1985		X	X
KAWASAKI	750 VULCAN	750	1989	1993	X	

AGPA74						
MARCA Brand	MODELLO Model	CC	DA From	A To	ANT. Front	POST. Rear
KAWASAKI	GPZ 750	750	1985	1986	X	X
KAWASAKI	GPZ 750 R1	750	1985	1987	X	X
KAWASAKI	GT 750	750	1985		X	X
KAWASAKI	VN 750 TWIN	750	1986		X	
KAWASAKI	VN 750	750	1988		X	X
KAWASAKI	VN 750 VULCAN	750	1990		X	
KAWASAKI	Z 750 GP	750	1983		X	X
KAWASAKI	Z 750 LTD TWIN K1	750	1983		X	
KAWASAKI	ZX 750 A1	750	1983		X	X
KAWASAKI	ZX 750 E1 TURBO	750	1983		X	X
KAWASAKI	VN 800	800	1995	1998	X	
KAWASAKI	VN 850	850	1995		X	
KAWASAKI	GPZ 900 R NINJA	900	1984	1989	X	X
KAWASAKI	GPZ 900	900	1985		X	X
KAWASAKI	Z 900 Z1A - Z1B	900	1974	1976	X	
KAWASAKI	GPZ 1000 RX - RY	1000	1986		X	X
KAWASAKI	GTR 1000	1000	1986	1993	X	X
KAWASAKI	VN 1000 VULCAN	1000	1987		X	X
KAWASAKI	Z 1000 GTR (ZG 1000)	1000	1986	1993	X	X
KAWASAKI	Z 1000 GTR	1000	1994			X
KAWASAKI	ZL 1000 ALL MODELS	1000	1987		X	X
KAWASAKI	GPX 1100 (ZX 1100 A1)	1100	1983		X	X
KAWASAKI	VN 1100	1100	1987		X	X
KAWASAKI	Z 1100 R1	1100	1984		X	X
KAWASAKI	ZX 1100 A1	1100	1983	1984	X	X
KAWASAKI	KZ 1200	1200	1987		X	X
KAWASAKI	ZG 1200 VOYAGER	1200	1986		X	X
KAWASAKI	ZG 1200	1200	1986	1990	X	X
KAWASAKI	VN 1500 ALL MODELS	1500	1987	1993	X	X
KAWASAKI	VN 1500 SUMO	1500	1988		X	X
KAWASAKI	VN 1500 D1/D2 CLASSIC	1500	1996	1998		X
KAWASAKI	VN 1500 CLASSIC TOURER (PINZA DX)	1500	1998			X
KAWASAKI	VN 1500 CLASSIC TOURER F1 (PINZA DX)	1500	2000	2002		X
KAWASAKI	VN 1600 CLASSIC (PINZA DX)	1600	2003	2008		X
KAWASAKI	VN 1700 CLASSIC (PINZA DX)	1700	2009			X
KAWASAKI	VN 1700 CLASSIC TOURER (PINZA DX)	1700	2009			X

PASTIGLIE BRAKE PADS

APPLICAZIONI PER CODICE PASTIGLIA / applications for pads code

MESCOLA ORGANICA, SINTERIZZATA, EV1 E EV2 organic, sintered, ev1 and ev2 compounds
OR / ST / EV1 / EV2

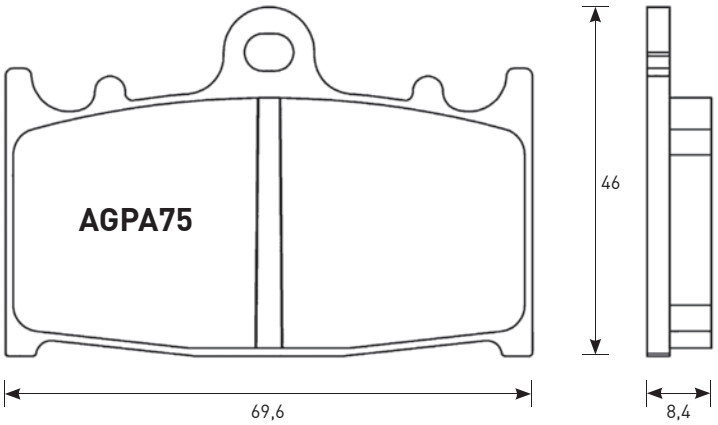

CROSS REFERENCE	
EBC	**FA158**
OGNIBENE	**214**
BRAKING	**715**
NEWFREN	**.FD.0143**
BREMBO	**07KA13**
FERODO	**FDB574**
CL	**2251**
SBS	**631**

EQUIVALENT OE #	
OEM Kawasaki	**43082 1162**
OEM Kawasaki	**43082 1142**
OEM Kawasaki	**43082 0019**
OEM Kawasaki	**43082 0030**
OEM Kawasaki	**43082 1169**
OEM Kawasaki	**43082 0016**
OEM Kawasaki	**43082 0014**
OEM Kawasaki	**43082 0025**
OEM Suzuki	**59300 34830**
OEM Suzuki	**59101 35810**
OEM Suzuki	**59100 35850**
OEM Suzuki	**59100 5880**
OEM Suzuki	**59100 35880**
OEM Suzuki	**59100 35830**
OEM Suzuki	**59130 32C20**

AGPA75						
MARCA Brand	**MODELLO** Model	**CC**	**DA** From	**A** To	**ANT.** Front	**POST.** Rear
HUSABERG	**FS 400 E - C**	**450**	**2001**	**2003**	**X**	
HUSABERG	**FS 450 E - C**	**450**	**2003**	**2005**	**X**	
HUSABERG	**FS 650 E - C**	**650**	**2001**		**X**	
KAWASAKI	**KR-1 250 S**	**250**	**1990**		**X**	
KAWASAKI	**ZX-4 400**	**400**	**1990**		**X**	
KAWASAKI	**ZXR 400**	**400**	**1989**	**1990**	**X**	
KAWASAKI	**ZZR 400**	**400**	**1990**	**1994**	**X**	
KAWASAKI	**GPZ 500**	**500**	**1993**	**1995**	**X**	
KAWASAKI	**ZZR 500 (AUSTRIA)**	**500**	**1990**	**1993**	**X**	
KAWASAKI	**600 R, NINJA**	**600**	**1989**		**X**	
KAWASAKI	**ZX-6R 600 D1-D4 (ZX6)**	**600**	**1990**	**1993**	**X**	
KAWASAKI	**ZX-6R 600 E1-E5 (NINJA ZX6)**	**600**	**1993**	**1997**	**X**	
KAWASAKI	**ZX-6R 600 F1-F3 (NINJA ZX6R)**	**600**	**1995**	**1997**	**X**	
KAWASAKI	**ZZR 600**	**600**	**1990**	**2005**	**X**	
KAWASAKI	**ZX-7R 750 NINJA**	**750**	**1989**	**1995**	**X**	
KAWASAKI	**ZXR 750 R**	**750**	**1989**	**1995**	**X**	
KAWASAKI	**GPZ 900 R**	**900**	**1990**	**1996**	**X**	
KAWASAKI	**ZX-9R 900 NINJA**	**900**	**1994**	**1995**	**X**	

AGPA75						
MARCA Brand	**MODELLO** Model	**CC**	**DA** From	**A** To	**ANT.** Front	**POST.** Rear
KAWASAKI	**1000 VERSYS**	**1000**	**2012**	**2015**	**X**	
KAWASAKI	**1000 VERSYS LT**	**1000**	**2015**		**X**	
KAWASAKI	**ZR 1100 ZEPHYR**	**1100**	**1992**	**1995**	**X**	
KAWASAKI	**ZX 1100 D1-D5 ZX-11**	**1100**	**1993**	**1997**	**X**	
KAWASAKI	**ZZR 1100**	**1100**	**1990**	**2001**	**X**	
KAWASAKI	**ZZR 1200**	**1200**	**2002**		**X**	
KAWASAKI	**VN 1700 VOYAGER**	**1700**	**2009**		**X**	
KAWASAKI	**VN 2000**	**2000**	**2004**		**X**	
SUZUKI	**RG 125 F, GAMMA**	**125**	**1992**	**1996**	**X**	
SUZUKI	**RG 200 GAMMA**	**200**	**1991**		**X**	
SUZUKI	**250 COBRA**	**250**	**1990**		**X**	
SUZUKI	**250 WOLF**	**250**	**1990**		**X**	
SUZUKI	**GSX-R 250 R**	**250**	**1989**		**X**	
SUZUKI	**RGV 250**	**250**	**1993**	**1995**	**X**	
SUZUKI	**RGV 250 GAMMA, M**	**250**	**1991**	**1992**	**X**	
SUZUKI	**RGV 250 K**	**250**	**1989**	**1990**	**X**	
SUZUKI	**TV 250 J**	**250**	**1988**		**X**	
SUZUKI	**350 GOOSE**	**350**	**1992**		**X**	
SUZUKI	**GSF 400 BANDIT**	**400**	**1993**	**1997**	**X**	
SUZUKI	**GSX 400 S, KATANA**	**400**	**1992**		**X**	
SUZUKI	**GSX-R 400**	**400**	**1988**	**1989**	**X**	
SUZUKI	**GSR 600**	**600**	**2006**		**X**	
SUZUKI	**GSX-R 600**	**600**	**1997**	**2003**	**X**	
SUZUKI	**GSF 650 BANDIT**	**650**	**2007**		**X**	
SUZUKI	**GSF 650 BANDIT ABS**	**650**	**2007**		**X**	
SUZUKI	**GSF 650 S BANDIT**	**650**	**2007**		**X**	
SUZUKI	**GSF 650 S BANDIT ABS**	**650**	**2007**		**X**	
SUZUKI	**GSX 650 F**	**650**	**2008**		**X**	
SUZUKI	**GSX-R 750 Y**	**750**	**2000**	**2003**	**X**	
SUZUKI	**SV 1000 , S**	**1000**	**2003**		**X**	
SUZUKI	**TL 1000 S V-TWIN**	**1000**	**1997**	**2001**	**X**	
SUZUKI	**GSF 1200 BANDIT**	**1200**	**2006**		**X**	
SUZUKI	**GSF 1200 S BANDIT**	**1200**	**2006**		**X**	
SUZUKI	**GSF 1250 BANDIT ABS**	**1250**	**2006**		**X**	
SUZUKI	**GSF 1250 S BANDIT ABS**	**1250**	**2006**		**X**	
SUZUKI	**GSF 1250 S BANDIT ABS**	**1250**	**2015**		**X**	
SUZUKI	**GSX 1250 FA**	**1250**	**2010**		**X**	

ACCOSSATO

PASTIGLIE BRAKE PADS

APPLICAZIONI PER CODICE PASTIGLIA / applications for pads code

MESCOLA ORGANICA E SINTERIZZATA organic and sintered compound
OR / ST

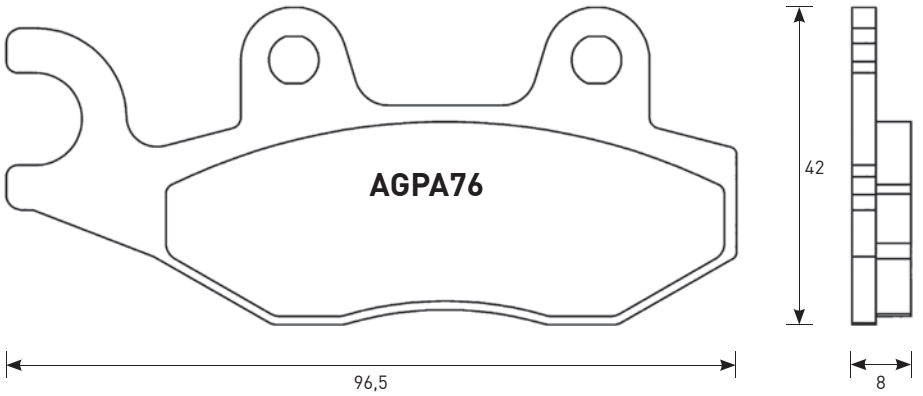

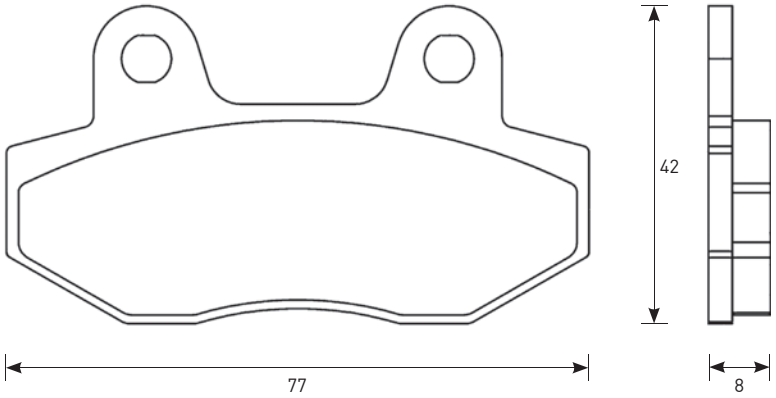

CROSS REFERENCE	
EBC	FA135
OGNIBENE	211
BRAKING	696
NEWFREN	.FD.0122
BREMBO	07SU122
FERODO	FDB497
CL	2288
SBS	611

EQUIVALENT OE #	
OEM Kawasaki	43082 0060
OEM Kawasaki	43082 1117
OEM Kawasaki	43082 1089
OEM Kawasaki	43082 1099
OEM Kymco	45106 KKD6 E00
OEM Suzuki	59300 27810
OEM Suzuki	59100 05830
OEM Suzuki	59300 27860
OEM Suzuki	59300 27830
OEM Suzuki	59300 27870
OEM Suzuki	59300 27850
OEM Suzuki	59300 26830
OEM Triumph	2020072T0301
OEM Yamaha	4EW W0045 00
OEM Yamaha	4EW W0045 01
OEM Yamaha	4SS W0045 00
OEM Yamaha	3JD W0045 00
OEM Yamaha	3SP W0045 00
OEM Yamaha	4MX W0045 00

AGPA76						
MARCA Brand	MODELLO Model	CC	DA From	A To	ANT. Front	POST. Rear
ATK	ALL MODELS 1994		1994		X	X
CAGIVA	110 PASSING	110	1994		X	
CAGIVA	600 CANYON	600	1995		X	
CAN-AM	800 COMMANDER LEFT/REAR	800	2011			X
CAN-AM	800 COMMANDER RIGHT	800	2011		X	

AGPA76						
MARCA Brand	MODELLO Model	CC	DA From	A To	ANT. Front	POST. Rear
CAN-AM	1000 COMMANDER LEFT/REAR	1000	2011			X
CAN-AM	1000 COMMANDER MAX RIGHT	1000	2014		X	
CAN-AM	1000 COMMANDER RIGHT	1000	2011		X	
CAN-AM	1000 MAVERICK RIGHT	1000	2013		X	
DERBI	DXR 200 QUAD (FRONT DRUM)	200	2004			X
DERBI	DXR 250 QUAD (FRONT DRUM)	250	2004			X
HONDA	NSR 150	150	2002			X
HOREX	VR6 1200	1200	2011			X
HUSQVARNA	ALL MODELS CR,TC,TE, WR		1992	1994		X
HYOSUNG	125 AQUILA	125	2000		X	
KAWASAKI	KLX 125	125	2010		X	
KAWASAKI	KLX 125 D-TRACKER	125	2010		X	
KAWASAKI	KX 125 G,H,J	125	1989	1993	X	
KAWASAKI	KLX 140 , L	140	2008		X	
KAWASAKI	KDX 200 E5	200	1991	1994	X	
KAWASAKI	KDX 250 SR, D1-D4	250	1991	1994	X	
KAWASAKI	KLX 250 S	250	2009		X	
KAWASAKI	KLX 250 SF	250	2009		X	
KAWASAKI	KX 250 G1,H1-2, J1-2	250	1989	1993	X	
KAWASAKI	EL 252	252	2001		X	
KAWASAKI	KLF 300 C1-C17 BAYOU LEFT/REAR	300	1989	2005	X	

PASTIGLIE BRAKE PADS

APPLICAZIONI PER CODICE PASTIGLIA / applications for pads code

ACCOSSATO

AGPA76						
MARCA Brand	**MODELLO** Model	**CC**	**DA** From	**A** To	**ANT.** Front	**POST.** Rear
KAWASAKI	KLF 400 B1-B7 BAYOU LEFT	400	1993	1999	X	
KAWASAKI	KX 500 E1-E5	500	1989	1993	X	
KAWASAKI	KLR 650 E8F	650	2008		X	
KAWASAKI	KVF 650 BRUTE FORCE 4X4I (F_, G_, H_) LEFT	650	2005		X	
KAWASAKI	KRF 750 TERYX 4X4 LEFT	750	2008		X	
KAWASAKI	KVF 750 BRUTE FORCE 4X4I (A_, B_, C_,D_, E_, F_) LEFT	750	2005		X	
KAWASAKI	KRF 800 TERYX BEF/ CEF/DEF LEFT	800	2014		X	
KAWASAKI	KRT 800 TERYX 4 BEF/ CEF/DEF LEFT	800	2014		X	
SUZUKI	EN 125	125	2005		X	
SUZUKI	RM 125 H	125	1987		X	
SUZUKI	RM 125 J	125	1988		X	
SUZUKI	RM 125 K,L	125	1989	1990	X	
SUZUKI	RM 125 M,N,P,R,S	125	1991	1995	X	
SUZUKI	TS 125 R	125	1989	1996	X	
SUZUKI	TS 200 R	200	1990	1994	X	
SUZUKI	DR 250 L,M,N,EP, ER,ES	250	1990	1995	X	
SUZUKI	DR 250 SL,SM,SN, SEP,SER, SES	250	1990	1995	X	
SUZUKI	RM 250 H, J	250	1987	1988	X	
SUZUKI	RM 250 K,L	250	1989	1990	X	
SUZUKI	RM 250 M,N,P,R,S	250	1991	1995	X	
SUZUKI	RMX 250 K,L,M,N,P, R,S	250	1989	1995	X	
SUZUKI	LT-F 300 KING QUAD LEFT/REAR	300	2002		X	
SUZUKI	DR 350 L,M,N,P,R,S	350	1990	1999	X	
SUZUKI	DR 350 S,SH,SL,SM, SN,SP,SR,SE	350	1990	1996	X	
SUZUKI	LT-R 450 LEFT/REAR	450	2006		X	
SUZUKI	LT-A 500 FY QUADMASTER LEFT	500	2000		X	
SUZUKI	LT-F 500 F RIGHT	500	1998		X	
SUZUKI	RM 500 H	500	1987		X	
TRIUMPH	750 TRIDENT LEFT/REAR	750	1991		X	X
TRIUMPH	800 AMERICA	800	2003	2006		X
TRIUMPH	800 BONNEVILLE	800	2001	2004		X
TRIUMPH	800 BONNEVILLE AMERICA	800	2002			X
TRIUMPH	800 BONNEVILLE T100 CENTENNIAL EDITION	800	2002	2004		X
TRIUMPH	800 BONNEVILLE T100 PAUL SMITH	800	2006	2008		X
TRIUMPH	800 SPEEDMASTER	800	2003	2004		X
TRIUMPH	900 AMERICA	900	2007			X
TRIUMPH	900 BONNEVILLE	900	2009			X
TRIUMPH	900 BONNEVILLE NEWCHURCH	900	2015			X
TRIUMPH	900 BONNEVILLE SE	900	2009			X
TRIUMPH	900 BONNEVILLE SPIRIT	900	2015			X
TRIUMPH	900 BONNEVILLE T100	900	2005	2009		X
TRIUMPH	900 BONNEVILLE T214	900	2015		X	X
TRIUMPH	900 DAYTONA, SPRINT LEFT/REAR	900	1993			X

AGPA76						
MARCA Brand	**MODELLO** Model	**CC**	**DA** From	**A** To	**ANT.** Front	**POST.** Rear
TRIUMPH	900 SCRAMBLER	900	2006			X
TRIUMPH	900 SPEEDMASTER	900	2005			X
TRIUMPH	900 THRUXTON	900	2004			X
TRIUMPH	900 THRUXTON ACE	900	2015			X
TRIUMPH	900 TIGER LEFT/REAR	900	1993	1998	X	X
TRIUMPH	900 TRIDENT LEFT/REAR	900	1991		X	X
TRIUMPH	900 TROPHY LEFT/REAR	900	1991	1995	X	X
TRIUMPH	T509 900 SPEED TRIPLE	900	1997	1998		X
TRIUMPH	T595 950 DAYTONA	950	1996	1998		X
TRIUMPH	955 DAYTONA	955	1999			X
TRIUMPH	955 DAYTONA CENTENNIAL	955	2002			X
TRIUMPH	955 SPEED TRIPLE	955	1999			X
TRIUMPH	955 SPRINT RS	955	2000			X
TRIUMPH	955 SPRINT ST	955	1999	2004		X
TRIUMPH	1000 TROPHY LEFT/REAR	1000	1991	1995	X	X
TRIUMPH	1050 SPEED TRIPLE (RAD.CAL)	1050	2005	2008		X
TRIUMPH	1050 SPRINT GT ABS	1050	2011			X
TRIUMPH	1050 SPRINT ST	1050	2005			X
TRIUMPH	1050 TIGER SPORT	1050	2015			X
TRIUMPH	1200 TIGER EXPLORER	1200	2012			X
TRIUMPH	1200 TROPHY LEFT/REAR	1200	1991	1995	X	X
TRIUMPH	1200 TROPHY SE	1200	2013			X
YAMAHA	FZR 50	50	1992		X	
YAMAHA	YD 80	80	1989		X	
YAMAHA	WR 125	125	1991	1997	X	
YAMAHA	XTZ 125	125	2005		X	
YAMAHA	YZ 125	125	1990	1997	X	
YAMAHA	YZ 125 V, W	125	1989		X	
YAMAHA	DT 200 WR	200	1991	1993	X	
YAMAHA	WR 200	200	1991	1992	X	
YAMAHA	TT-R 230	230	2005		X	
YAMAHA	TT 250 R	250	1993		X	
YAMAHA	WR 250	250	1990		X	
YAMAHA	WR 250	250	1992	1997	X	
YAMAHA	WR 250 ZB	250	1991		X	
YAMAHA	YZ 250 A	250	1990		X	
YAMAHA	YZ 250 B1-J1	250	1991	1997	X	
YAMAHA	YZ 250 V,W,WRW	250	1989		X	
YAMAHA	YZ 250 WRA,WRB	250	1990	1991	X	
YAMAHA	TT 350	350	1995		X	
YAMAHA	YZ 360	360	1989		X	
YAMAHA	YFZ 450 S RIGHT	450	2004	2006	X	
YAMAHA	YXR 450 RHINO LEFT/REAR	450	2006		X	
YAMAHA	WR 500 B	500	1991		X	
YAMAHA	WR 500 ZD,ZE	500	1992	1993	X	
YAMAHA	660 RHINO LEFT/REAR	660	2005		X	
YAMAHA	YFM 700 R RAPTOR LEFT/REAR	700	2006	2008	X	
YAMAHA	YFM 700 RY	700	2009		X	
YAMAHA	YXR 700 RHINO RIGHT	700	2008		X	X
YAMAHA	XTZ 750 SUPER TENERE LEFT/REAR	750	1989	1995	X	

ACCOSSATO

PASTIGLIE BRAKE PADS

APPLICAZIONI PER CODICE PASTIGLIA / applications for pads code

MESCOLA ORGANICA E SINTERIZZATA organic and sintered compound
OR / ST

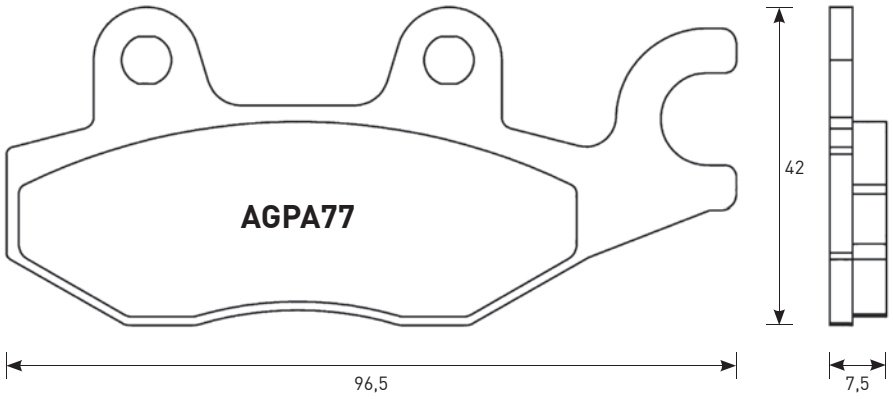

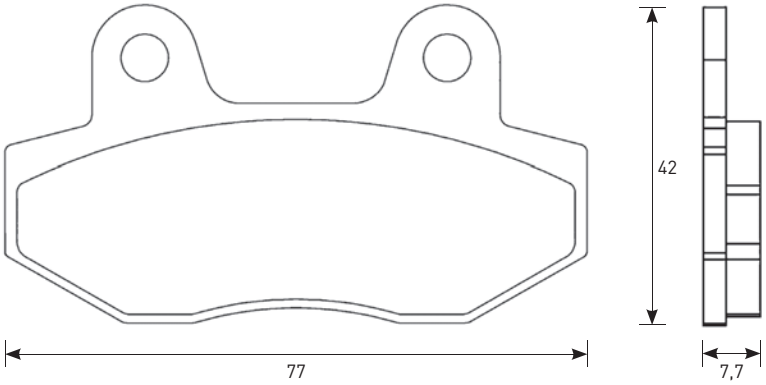

CROSS REFERENCE	
EBC	FA165
OGNIBENE	271
BRAKING	725
NEWFREN	.FD.0163
BREMBO	07YA20
FERODO	FDB631
CL	2326
SBS	638

EQUIVALENT OE #	
OEM Cagiva	8000 66785
OEM Honda	06455 KEB 900
OEM Honda	06455 KEB 901
OEM Kawasaki	43082 0081
OEM Suzuki	59100 05820
OEM Suzuki	69100 31820
OEM Triumph	2020071T0301
OEM Triumph	T2020560
OEM Triumph	T2020555
OEM Yamaha	3LD W0045 10
OEM Yamaha	3LD W0046 01

AGPA77						
MARCA Brand	MODELLO Model	CC	DA From	A To	ANT. Front	POST. Rear
AEON	OVERLAND 125	125	2002			X
AEON	OVERLAND 180	180	2002			X
AEON	ROADSTER 180	180	2002			X
ARCTIC CAT	50 DVX	50	2006			X
ARCTIC CAT	90 DVX	90	2006			X
CAGIVA	CANYON 500	500	1999			X
CAGIVA	CANYON 600	600	1995			X
CAGIVA	CANYON 900 I.E.	900	1997			X
CAGIVA	ELEFANT 900 I.E. - GT - AC	900	1991			X
CAGIVA	GRAND CANYON 900	900	1999			X
CAGIVA	NAVIGATOR 1000	1000	2000			X
CAN-AM	800 COMMANDER LEFT/REAR	800	2011		X	
CAN-AM	1000 COMMANDER LEFT/REAR	1000	2011		X	
CAN-AM	1000 COMMANDER MAX LEFT	1000	2014		X	
CAN-AM	1000 MAVERICK LEFT	1000	2013		X	

AGPA77						
MARCA Brand	MODELLO Model	CC	DA From	A To	ANT. Front	POST. Rear
HONDA	CA 250 REBEL	250	1990		X	
JINCHENG	JC 125 2A/3A	125	1997		X	
KAWASAKI	BN 125 ELIMINATOR A3	125	2000		X	
KAWASAKI	EX 250 R NINJA	250	2008	2012	X	X
KAWASAKI	EX 300 R NINJA, ABS	300	2013		X	X
KAWASAKI	KLF 300 C1-C17 BAYOU RIGHT	300	1989	2005	X	
KAWASAKI	Z 300	300	2015		X	X
KAWASAKI	KLF 400 B1-B7 BAYOU RIGHT	400	1993	1999	X	
KAWASAKI	KLR 650 E8F-	650	2008			X
KAWASAKI	KVF 650 BRUTE FORCE 4X4I (F_, G_, H_) RIGHT	650	2005		X	
KAWASAKI	KRF 750 TERYX 4X4 RIGHT	750	2008		X	
KAWASAKI	KVF 750 BRUTE FORCE 4X4I (A_, B_, C_,D_, E_, F_) RIGHT	750	2005		X	
KAWASAKI	KRF 800 TERYX BEF/ CEF/DEF RIGHT	800	2014		X	
KAWASAKI	KRT 800 TERYX 4 BEF/ CEF/DEF RIGHT	800	2014		X	
KREIDLER	125 FLORETT D	125	2007		X	
KREIDLER	125 FLORETT RMC-F	125	2007		X	
MOTOR UNION	HK 250 HAOKE	250	1997		X	
SUZUKI	LT-F 300 KING QUAD RIGHT	300	2002		X	
SUZUKI	LT-R 450 RIGHT	450	2006		X	
SUZUKI	LT-A 500 FY QUADMASTER RIGHT	500	2000		X	
SUZUKI	LT-F 500 F LEFT	500	1998		X	
SUZUKI	DR 800 S, BIG	800	1991	1995		X

PASTIGLIE BRAKE PADS

APPLICAZIONI PER CODICE PASTIGLIA / applications for pads code

AGPA77						
MARCA Brand	**MODELLO** Model	**CC**	**DA** From	**A** To	**ANT.** Front	**POST.** Rear
SUZUKI	DR 800 ST BIG	800	1996			X
TRIUMPH	750 TRIDENT RIGHT	750	1991		X	
TRIUMPH	900 BONNEVILLE	900	2005	2008		X
TRIUMPH	900 DAYTONA, SPRINT	900	1994			X
TRIUMPH	900 DAYTONA, SPRINT RIGHT	900	1993		X	
TRIUMPH	900 SPEED TRIPLE	900	1994			X
TRIUMPH	900 TIGER RIGHT	900	1993	1998	X	
TRIUMPH	900 TRIDENT RIGHT	900	1991		X	
TRIUMPH	900 TROPHY RIGHT	900	1991	1995	X	
TRIUMPH	955 TIGER	955	2004	2006		X
TRIUMPH	1000 TROPHY RIGHT	1000	1991	1995	X	
TRIUMPH	1050 TIGER	1050	2007			X

AGPA77						
MARCA Brand	**MODELLO** Model	**CC**	**DA** From	**A** To	**ANT.** Front	**POST.** Rear
TRIUMPH	1050 TIGER SE (RAD.CAL)	1050	2009			X
TRIUMPH	1200 TROPHY RIGHT	1200	1991	1995	X	
YAMAHA	FZR 50	50	1990		X	
YAMAHA	YBR 250	250	2007		X	
YAMAHA	YFZ 450 S LEFT/REAR	450	2004	2006	X	
YAMAHA	YXR 450 RHINO RIGHT	450	2006		X	
YAMAHA	660 RHINO RIGHT	660	2005		X	
YAMAHA	YFM 700 R RAPTOR RIGHT	700	2006	2008	X	
YAMAHA	YFM 700 RY	700	2009		X	
YAMAHA	YXR 700 RHINO LEFT	700	2008		X	X
YAMAHA	XTZ 750 SUPER TENERE RIGHT	750	1989	1995	X	

MESCOLA ORGANICA E SINTERIZZATA organic and sintered compound
OR / ST

CROSS REFERENCE	
EBC	FA193
NEWFREN	.FD.0263
BREMBO	07BB1810
FERODO	FDB2081
SBS	149

EQUIVALENT OE #	
OEM Aprilia	8113662

AGPA78						
MARCA Brand	**MODELLO** Model	**CC**	**DA** From	**A** To	**ANT.** Front	**POST.** Rear
APRILIA	SR 50 WWW, NETSCAPER	50	1997		X	
APRILIA	125 LEONARDO	125	1997	1998	X	
APRILIA	150 LEONARDO	150	1997	1998	X	

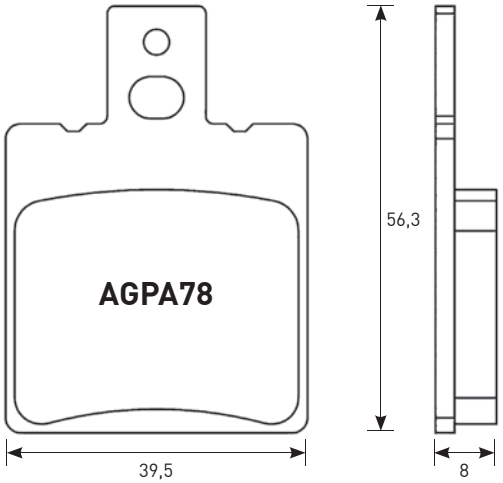

MESCOLA ORGANICA E SINTERIZZATA organic and sintered compound
OR / ST

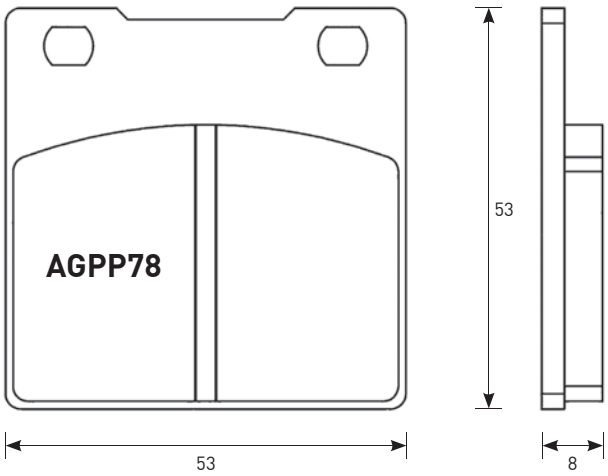

CROSS REFERENCE	
EBC	FA161
NEWFREN	.FD.0045
BREMBO	07YA1107
FERODO	FDB338
CL	2282
SBS	556

EQUIVALENT OE #	
OEM Kawasaki	43082 1182
OEM Kawasaki	43082 1180
OEM Kawasaki	43082 1098
OEM Kawasaki	43082 1103
OEM Kawasaki	43082 1257
OEM Kawasaki	43082 1200

AGPP78						
MARCA Brand	**MODELLO** Model	**CC**	**DA** From	**A** To	**ANT.** Front	**POST.** Rear
HYOSUNG	GT 250 COMET	250	2002			X
HYOSUNG	GT 600 COMET	600	2002			X
KAWASAKI	Z 250	250	1978	1980		X
KAWASAKI	Z 250 J/A3	250	1981			X
KAWASAKI	ZX-4 400	400	1990			X
KAWASAKI	ZXR 400	400	1989	1990		X
KAWASAKI	ZXR 400 L1 / L2 / L3 / L4 / L5	400	1991	2002		X
KAWASAKI	EN 600 R NINJA	600	1989			X
KAWASAKI	ZX7-R 750 NINJA	750	1989	2002		X
KAWASAKI	ZXR 750 R	750	1989	1995		X
KAWASAKI	ZRX 1100	1100	1996	2000		X
KAWASAKI	ZX 1100 D1-D4 ZX 11	1100	1993	1997		X
KAWASAKI	ZZR 1100	1100	1994	2001		X
KAWASAKI	ZRX 1200 / S / R	1200	2001	2008		X
KAWASAKI	ZX12-R 1200 NINJA	1200	2000	2003		X
KAWASAKI	ZX12-R 1200 NINJA (RAD.CAL)	1200	2004			X
KAWASAKI	ZZR 1200	1200	2002			X

ACCOSSATO

PASTIGLIE BRAKE PADS

APPLICAZIONI PER CODICE PASTIGLIA / applications for pads code

MESCOLA ORGANICA E SINTERIZZATA organic and sintered compound
OR / ST

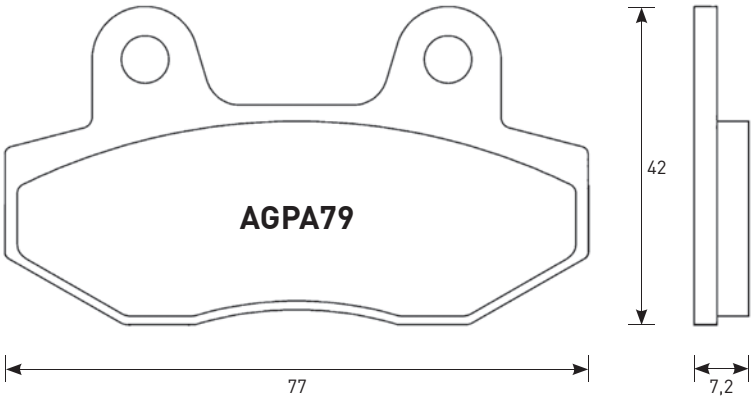

CROSS REFERENCE	
EBC	FA086
BRAKING	673
NEWFREN	.FD.0075
BREMBO	7027
FERODO	FDB312
CL	2621/3096
SBS	103/551

EQUIVALENT OE #	
OEM Honda	45105 KR3 014

AGPA79						
MARCA Brand	MODELLO Model	CC	DA From	A To	ANT. Front	POST. Rear
CAGIVA	50 MITO	50	1999		X	
CAGIVA	125 STELLA	125	1997		X	
DAELIM	110 CITY ACE	110	2003		X	
GARELLI	125 JOKER 2	125	2002		X	
GARELLI	150 JOKER 2	150	2002		X	
FACTORY	YR 125	125	2006		X	
HONDA	MBX 50 S	50	1983	1985	X	
HONDA	NS 50 F, AERO	50	1988		X	
HONDA	NS-1 50	50	1991		X	
HONDA	NSR 50	50	1989	1990	X	
HONDA	NSR 75 FII	75	1988	2000	X	
HONDA	NSR 80 R	80	1987	1992	X	
HONDA	MBX 80	80	1983	1986	X	
HONDA	MBX 80 DX	80	1982		X	
HONDA	MBX 80 SW, SWD	80	1983		X	
HONDA	CBX 125 Custom	125	1988		X	
HONDA	FS 125 Sonic	125	2003		X	
HONDA	MBX 125 RWB	125	1984		X	
HONDA	CB 250 Rebel	250	1986		X	
HONDA	CMX 250 Rebel	250	1985		X	
HONDA	VT 250 F	250	1983	1987	X	
HONDA	VTR 250	250	1988	1989	X	
HONDA	CBX 400 F, F2, F2C	400	1982		X	
HONDA	VF 400 F	400	1985		X	

AGPA79						
MARCA Brand	MODELLO Model	CC	DA From	A To	ANT. Front	POST. Rear
HONDA	VF 400 FD	400	1983	1985	X	
HONDA	VT 400 E	400	1983		X	
HONDA	VT 500 E	500	1983	1985	X	
HONDA	VT 500 ED	500	1982		X	
HONDA	CBX 550 F, F2	550	1982		X	
HONDA	CBX 650 E	650	1983		X	
HYOSUNG	125 BOOMER	125	2003			X
HYOSUNG	125 EXCEED	125	2002			X
HYOSUNG	125 Grand Prix Plus	125	2002		X	
HYOSUNG	GT 125 Comet	125	2002	2003	X	
HYOSUNG	GV 125 Aguila	125	2002	2004	X	
HYOSUNG	RT 125 Karion	125	2002	2006	X	
HYOSUNG	RX 125	125	2000		X	
HYOSUNG	XRX 125 Offroad	125	1999	2006	X	
HYOSUNG	150 EXCEED	150	2002			X
HYOSUNG	GV 250	250	2002			
HYOSUNG	XRX 400	400	2005			
HYOSUNG	600 Comet	600	2003			
HYOSUNG	GV 650 Aguila	650	2004	2005		
KYMCO	100 SPIKE	100	2002		X	
KYMCO	110 SPIKE	110	2003		X	
KYMCO	125 JETIX	125	2008		X	
KYMCO	125 SPIKE	125	2002		X	
KYMCO	CK 125	125	2004	2013	X	
KYMCO	DX 150 Custom	150	1993		X	
KYMCO	NSR 150	150	1993		X	
MZ	125 MANTIZZ S	125	2007		X	
SACHS	50 MADASS	50	2004		X	
SACHS	50 MADASS 4T	50	2005		X	
SYM	125 WOLF LEGEND	125	2002		X	
SYM	125 Wolf Classic	125	2005		X	
SYM	MF 180	180	2003		X	

PASTIGLIE BRAKE PADS

APPLICAZIONI PER CODICE PASTIGLIA / applications for pads code

MESCOLA ORGANICA E SINTERIZZATA organic and sintered compound
OR / ST

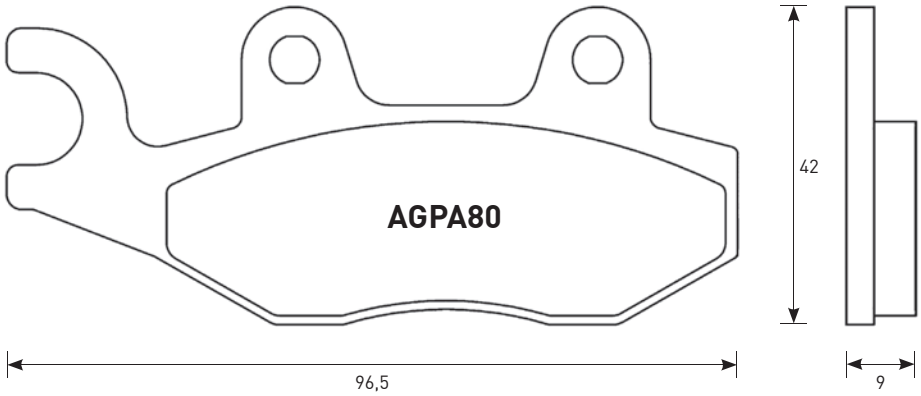

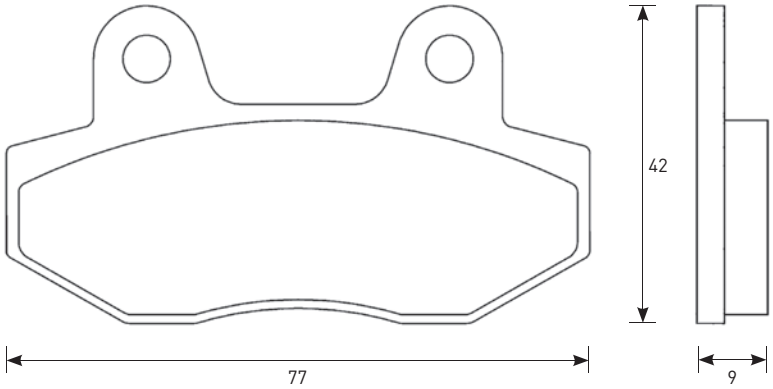

CROSS REFERENCE	
EBC	**FA228**
OGNIBENE	**169**
BRAKING	**228**
NEWFREN	**.FD.0230**
BREMBO	**07SU12**
FERODO	**FDB497**
CL	**3078**
SBS	**713**

EQUIVALENT OE #	
OEM Kawasaki	**43082 0060**
OEM Kawasaki	**43082 1117**
OEM Kawasaki	**43082 1089**
OEM Kawasaki	**43082 1099**
OEM Kymco	**45106 KKD6 E00**

AGPA80						
MARCA Brand	**MODELLO** Model	**CC**	**DA** From	**A** To	**ANT.** Front	**POST.** Rear
AEON	**125 URBAN**	**125**	**2011**	**2013**	**X**	
AEON	**250 ELITE**	**250**	**2011**		**X**	
AEON	**350 URBAN**	**350**	**2011**		**X**	
DAELIM	**50 A FOUR**	**50**	**2006**		**X**	
DAELIM	**125 DELFINO**	**125**	**2008**		**X**	
GENERIC	**125 ZION**	**125**	**2008**		**X**	
HONDA	**CA 125 REBEL**	**125**	**1995**	**1996**	**X**	
HONDA	**CMX 250 C REBEL**	**250**	**1996**	**1997**	**X**	
JINCHENG	**JC 250**	**250**	**2006**		**X**	
KEEWAY	**125 SUPERLIGHT**	**125**	**2006**		**X**	
KEEWAY	**150 SUPERLIGHT**	**150**	**2006**		**X**	
KEEWAY	**250 LAND CRUISER**	**250**	**2006**		**X**	
KYMCO	**50 AGILITY**	**50**	**2005**	**2008**	**X**	
KYMCO	**50 AGILITY (4T)**	**50**	**2006**		**X**	
KYMCO	**50 AGILITY (4T) R12**	**50**	**2006**		**X**	
KYMCO	**50 FILLY LX**	**50**	**2002**		**X**	
KYMCO	**50 NEW SENTO**	**50**	**2011**		**X**	
KYMCO	**50 SENTO**	**50**	**2008**	**2010**	**X**	

AGPA80						
MARCA Brand	**MODELLO** Model	**CC**	**DA** From	**A** To	**ANT.** Front	**POST.** Rear
KYMCO	**50 VITALITY**	**50**	**2004**		**X**	
KYMCO	**50 YUP SP/AL**	**50**	**2002**		**X**	
KYMCO	**RS 50 AGILITY NAKED**	**50**	**2010**		**X**	
KYMCO	**125 AGILITY**	**125**	**2006**		**X**	
KYMCO	**125 AGILITY CITY**	**125**	**2011**		**X**	
KYMCO	**125 LIKE**	**125**	**2011**		**X**	
KYMCO	**125 STRYKER ON/OFF**	**125**	**1099**		**X**	
KYMCO	**125 VIVIO**	**125**	**2001**		**X**	
KYMCO	**150 STRYKER OFF**	**150**	**2001**		**X**	
KYMCO	**150 VIVIO**	**150**	**2001**		**X**	
KYMCO	**300 PEOPLE SI LEFT/REAR**	**300**	**2008**		**X**	
KREIDLER	**125 ENDURO**	**125**	**2007**		**X**	
KREIDLER	**125 SUPERMOTO**	**125**	**2007**		**X**	
KREIDLER	**200 ENDURO**	**200**	**2007**		**X**	
MALAGUTI	**125 BLOG**	**125**	**2010**		**X**	
MALAGUTI	**125 CENTRO IE**	**125**	**2008**		**X**	
MALAGUTI	**160 BLOG**	**160**	**2010**		**X**	
MALAGUTI	**160 CENTRO IE**	**160**	**2008**		**X**	
MZ	**125 SM, SX**	**125**	**2002**		**X**	
QUINGOI	**QM 125 GY**	**125**	**2002**		**X**	
PGO	**125 I-CHARGE FUEL INJECTION**	**125**	**2003**		**X**	
TGB	**50 203**	**50**	**2005**		**X**	
TGB	**50 AKROS TEC 5**	**50**	**1999**		**X**	
TGB	**50 APOLLO**	**50**	**1999**		**X**	
TGB	**50 FIRE, SKY**	**50**	**2003**		**X**	
TGB	**90 APOLLO**	**90**	**1999**		**X**	
TGB	**250 DYNASTY**	**250**	**2006**		**X**	

ACCOSSATO

PASTIGLIE BRAKE PADS

APPLICAZIONI PER CODICE PASTIGLIA / applications for pads code

MESCOLA ORGANICA, SINTERIZZATA, E STMX organic, sintered and stmx compounds
OR / ST / STMX

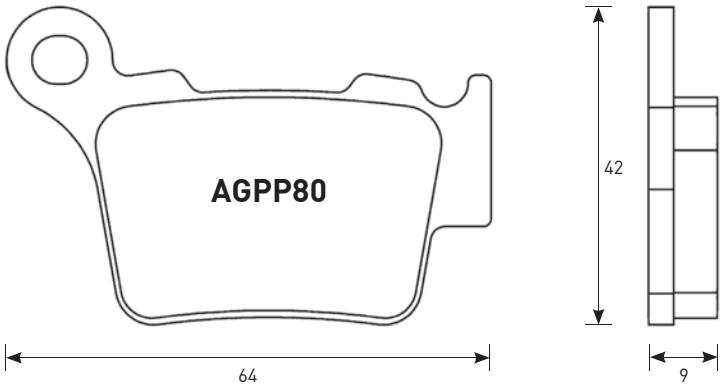

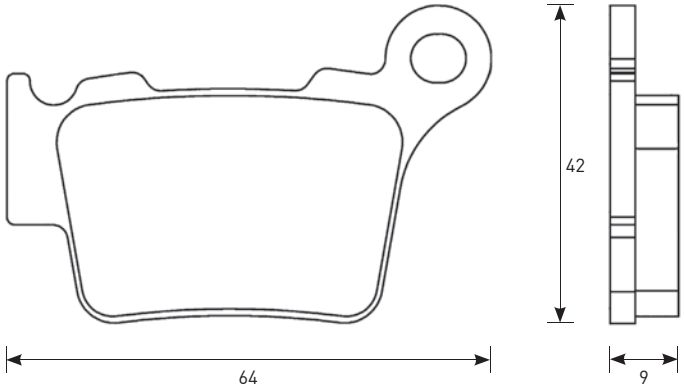

CROSS REFERENCE	
EBC	FA368
BRAKING	891
NEWFREN	.FD.0348
BREMBO	07BB2750
FERODO	FDB2165
CL	1108
SBS	791

EQUIVALENT OE #	
OEM BMW	34 21 7 717 324
OEM KTM	54813090000
OEM KTM	54813090100
OEM KTM	54813090300
OEM KTM	54813090200

AGPP80						
MARCA Brand	MODELLO Model	CC	DA From	A To	ANT. Front	POST. Rear
BMW	G 450 SMR	450	2009			X
BMW	G 450 ENDURO	450	2008			X
HUSABERG	TE 125	125	2013			X
HUSABERG	TE 250	250	2011			X
HUSABERG	TE 250	250	2013			X
HUSABERG	TE 300	300	2011			X
HUSABERG	FE 390	393	2010			X
HUSABERG	FE 450	450	2009			X
HUSABERG	FE 501	501	2013			X
HUSABERG	FE 570	565	2009			X
HUSQVARNA	CR 125	125	2005	2013		X
HUSQVARNA	TC 125	125	2014			X
HUSQVARNA	TE 125	125	2014			X
HUSQVARNA	CR 250	250	2005			X
HUSQVARNA	FC 250	250	2014			X
HUSQVARNA	FE 250	250	2014			X
HUSQVARNA	TC 250	250	2004	2014		X
HUSQVARNA	TE 250	250	2014			X
HUSQVARNA	TE 250 4T	250	2010	2013		X

AGPP80						
MARCA Brand	MODELLO Model	CC	DA From	A To	ANT. Front	POST. Rear
HUSQVARNA	TC 300	300	2014			X
HUSQVARNA	TE 300	300	2014			X
HUSQVARNA	WR 300	300	2009	2013		X
HUSQVARNA	TE 310 4T	302	2010	2013		X
HUSQVARNA	FC 350	350	2014			X
HUSQVARNA	FE 350	350	2014			X
HUSQVARNA	SMR 449	449	2011			X
HUSQVARNA	TC 449	449	2011	2013		X
HUSQVARNA	TE 449	449	2011	2013		X
HUSQVARNA	FC 450	450	2014			X
HUSQVARNA	FE 450	450	2014			X
HUSQVARNA	FS 450	450	2015			X
HUSQVARNA	SM 450 R	450	2006	2009		X
HUSQVARNA	SM 450 RR	450	2006			X
HUSQVARNA	TC 450	450	2004	2010		X
HUSQVARNA	TE 450	450	2014			X
HUSQVARNA	FE 501	501	2014			X
HUSQVARNA	SM 510 CENTENNIAL	510	2006			X
HUSQVARNA	SM 510 R	510	2006			X
HUSQVARNA	TC 510	510	2004	2010		X
HUSQVARNA	SMR 511	511	2011			X
HUSQVARNA	TE 511	511	2011	2014		X
HUSQVARNA	SM 610 IE	610	2007			X
HUSQVARNA	SM 630	630	2010			X
HUSQVARNA	TE 630	630	2010	2014		X
HUSQVARNA	STR 650 CRC	650	2007			X
KTM	EXC 125 ENDURO	125	2004			X
KTM	SX 125	125	2004			X

PASTIGLIE BRAKE PADS

APPLICAZIONI PER CODICE PASTIGLIA / applications for pads code

AGPP80						
MARCA Brand	**MODELLO** Model	**CC**	**DA** From	**A** To	**ANT.** Front	**POST.** Rear
KTM	SX 144	144	2007	2008		X
KTM	SX 150	150	2009			X
KTM	EXC 200 ENDURO	200	2004			X
KTM	SX 200	200	2003	2004		X
KTM	EXC 250 ENDURO	250	2004			X
KTM	EXC 250 ENDURO 4T	250	2004	2006		X
KTM	EXC-F 250 ENDURO	250	2007			X
KTM	SX 250	250	2003			X
KTM	SX-F 250	250	2006			X
KTM	EXC 300 ENDURO	300	2004			X
KTM	EXC-F 350	350	2011			X
KTM	SX-F 350	350	2011			X
KTM	EXC 450 RACING	450	2004			X
KTM	SX 450 SM FACTORY	450	2004			X
KTM	REPLICA					X
KTM	SX 450 SMR	450	2004	2012		X
KTM	SX 450 SMR 13- RSI	450	2013			X
KTM	SX-F 450	450	2003			X
KTM	XC-F 450 08- RSI	450	2008			X
KTM	SX 505 RACING	505	2007			X
KTM	XC-F 505	505	2009			X
KTM	EXC 525 RACING	525	2004			X

AGPP80						
MARCA Brand	**MODELLO** Model	**CC**	**DA** From	**A** To	**ANT.** Front	**POST.** Rear
KTM	SX 525 SMR	525	2004			X
KTM	SX-F 525 RACING	525	2004	2006		X
KTM	EXC 530 RACING	530	2008			X
KTM	SX 560 SMR	560	2006			X
RIEJU	MRX 250 MARATHON	250	2010			X
RIEJU	MRX 450 MARATHON	450	2008			X
SHERCO	SE 250 , R	250	2014			X
SHERCO	SE 250 F, F-R	250	2014			X
SHERCO	SE 250 I/IR	250	2013			X
SHERCO	SE 250 I-F	250	2013			X
SHERCO	SE 300 , R	300	2014			X
SHERCO	SE 300 F, F-R	300	2014			X
SHERCO	SE 300 I/IR	300	2012	2013		X
SHERCO	SE 300 I-F	300	2013			X
SHERCO	SE 450 F, F-R	450	2014			X
SHERCO	SE 450 IR	450	2012	2013		X
SHERCO	SE 510 IR	510	2012	2013		X
SWM	RS 300 R	300	2015			X
SWM	SM 450 R	450	2015			X
SWM	RS 500 R	500	2015			X
WRM	450 MX	450	2006			X

MESCOLA ORGANICA E SINTERIZZATA organic and sintered compound
OR / ST

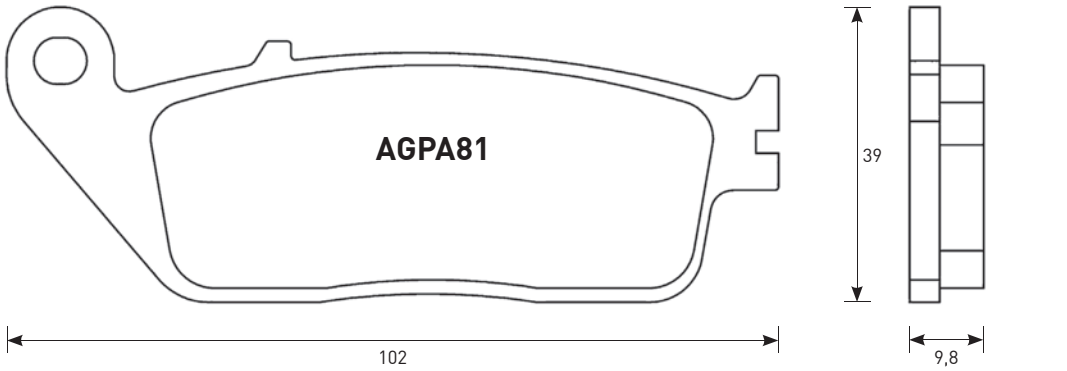

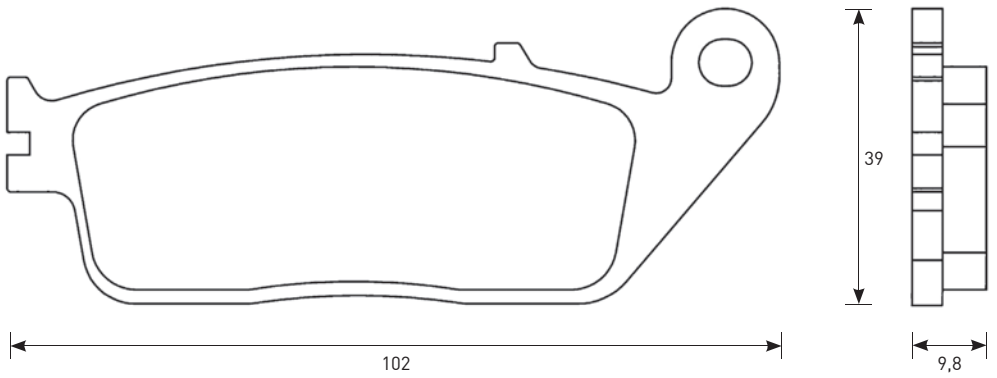

ACCOSSATO

PASTIGLIE BRAKE PADS

APPLICAZIONI PER CODICE PASTIGLIA / applications for pads code

CROSS REFERENCE	
EBC	FA196
OGNIBENE	281
BRAKING	720
NEWFREN	.FD.0130
BREMBO	07HO31/07HO3405
FERODO	FDB570/FDB664
CL	2313/3059
SBS	700

EQUIVALENT OE #	
OEM Honda	06455 MAA 405
OEM Honda	06455 MAA 415
OEM Honda	06455 MAB 405
OEM Honda	06455 MAH 405
OEM Honda	06455 MAL G01
OEM Honda	06455 MAL G02
OEM Honda	06455 MAW 621
OEM Honda	06455 MBK 751
OEM Honda	06455 MBK 752
OEM Honda	06455 MCK A01
OEM Honda	06455 MCK A02
OEM Honda	06455 MEA 671
OEM Honda	06455 MEA 672
OEM Honda	06455 MR4 405
OEM Honda	06455 MR4 415
OEM Honda	06455 MS9 405
OEM Honda	06455 MW3 405
OEM Honda	06455 MW3 415
OEM Honda	06455 MZ0 760
OEM Honda	06455-MV4-405
OEM Honda	45106 ML7 922
OEM Honda	06455 MV4 405
OEM Honda	45105 ML7 405
OEM Honda	45105 MW3 671
OEM Honda	45105 MR4 901
OEM Honda	45105 ML7 922
OEM Honda	43105 MY7 405
OEM Honda	43105 ML7 923
OEM Honda	43106 ML7 923
OEM Honda	06435 MZ0 760
OEM Honda	06435 MZ0 006

AGPA81						
MARCA Brand	MODELLO Model	CC	DA From	A To	ANT. Front	POST. Rear
HONDA	CBR 300 F	300	2014		X	
HONDA	CBR 300 R	300	2015		X	
HONDA	CB 500 F	500	2013		X	
HONDA	CB 500 X	500	2013		X	
HONDA	CBF 500	500	2004		X	
HONDA	CBR 500 R	500	2013		X	
HONDA	XL 600 V, TRANSALPINO	600	1994	1996	X	
HONDA	CB 650 F	650	2014		X	
HONDA	CBR 650 F	650	2014		X	
HONDA	CTX 700	700	2014		X	
HONDA	CTX 700 D ABS W/DCT	700	2014		X	
HONDA	CTX 700 N	700	2014		X	
HONDA	CTX 700 ND ABS W/DCT	700	2014		X	
HONDA	NM4 700 VULTUS ABS W/DCT	700	2015		X	
HONDA	NC 750 D INTEGRA	750	2014		X	
HONDA	NC 750 S W/DCT	750	2014		X	
HONDA	NC 750 X W/DCT	750	2014		X	
HONDA	VT 750 BLACK WIDOW	750	2001		X	
HONDA	VT 750 C2 SHADOW A.C.E.	750	1997	2003	X	
HONDA	VT 750 C2 SHADOW SPIRIT	750	2007		X	
HONDA	VT 750 C2B	750	2011		X	
HONDA	VT 750 C4 SHADOW	750	2004		X	
HONDA	VT 750 RS	750	2011		X	
HONDA	VT 750 S	750	2011		X	
HONDA	CBF 1000	1000	2006	2011	X	
HONDA	CBF 1000 LIMITED EDITION	1000	2009	2014	X	

MESCOLA ORGANICA E SINTERIZZATA organic and sintered compound
OR / ST



CROSS REFERENCE	
EBC	FA319
BRAKING	868
NEWFREN	.FD.0316
BREMBO	7052
FERODO	FDB2126
CL	3061
SBS	169

EQUIVALENT OE #	
OEM YAMAHA	5GJ W0046 00
OEM YAMAHA	59C 25806 00
OEM YAMAHA	5GJ 25806 00

AGPP81						
MARCA Brand	MODELLO Model	CC	DA From	A To	ANT. Front	POST. Rear
YAMAHA	XP 500 T MAX	500	2001	2003		X
YAMAHA	XP 530 TMAX	530	2012	2015		X
YAMAHA	XP 530 TMAX IRON MAX	530	2015			X

PASTIGLIE BRAKE PADS

APPLICAZIONI PER CODICE PASTIGLIA / applications for pads code

MESCOLA ORGANICA organic compound
OR

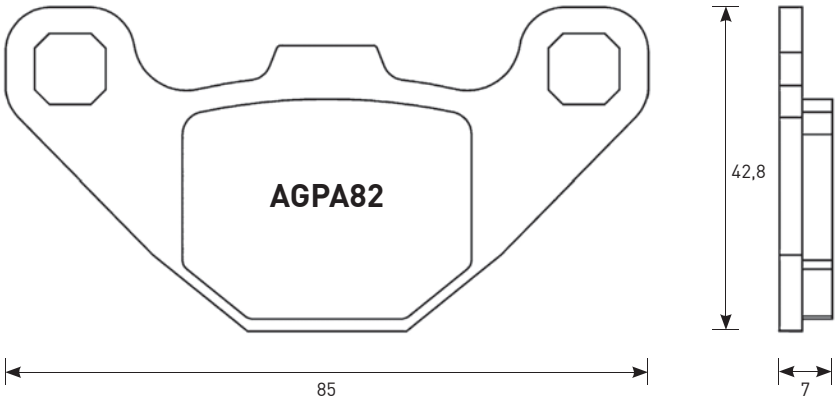

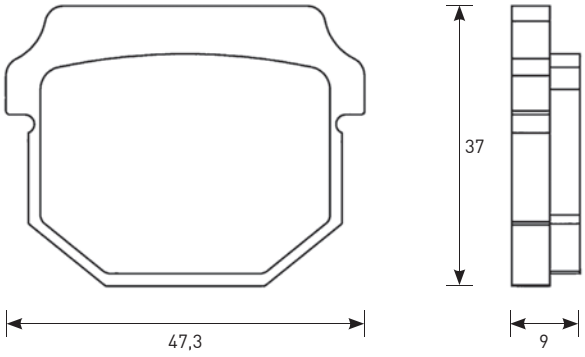

CROSS REFERENCE	
EBC	FA083
OGNIBENE	237
BRAKING	702
NEWFREN	.FD.0085
BREMBO	07KA07
FERODO	FDB313
CL	2469
SBS	544

EQUIVALENT OE #	
OEM Kawasaki	43082 1065
OEM Kawasaki	43082 1229
OEM Suzuki	59300 03860
OEM Suzuki	69100 02822
OEM Suzuki	69100 02821

AGPA82						
MARCA Brand	MODELLO Model	CC	DA From	A To	ANT. Front	POST. Rear
ADLY	150 ATV	150	2005		X	X
ADLY	150 INTERCEPTOR	150	2005		X	X
ADLY	300 ATV	300	2005		X	X
AEON	100 REVO 2	100	2004			X
AEON	125 PULSAR	125	2006		X	
APRILIA	RS-4 125	125	2012			X
APRILIA	RX 125 ENDURO	125	2008			X
APRILIA	RX 125 SUPERMOTARD	125	2008			X
BOMBARDIER	200 RALLY 2X4	200	2003	2006	X	
CAN-AM	DS 90 X	90	2008		X	X
CECTEK	500 EFI GLADIATOR	500	2009			X
CECTEK	500 EFI KING COBRA	500	2009			X
CECTEK	500 EFI QUADRIFT	500	2009			X
CECTEK	500 I ESTOC	500	2010			X
CPI	XS 250 QUAD	250	2006		X	
DAELIM	ST 250 SECTOR QUAD	250	2005	2006	X	
DERBI	DXR 200 QUAD (FRONT DISC)	200	2004		X	
DERBI	DXR 250 QUAD (FRONT DISC)	250	2004		X	
E-TON	VXL 250 VECTOR, ST VECTOR	250	2006		X	
E-TON	VTX 300 VORTEX, ST VORTEX	300	2007		X	
E-TON	VXL 300 VECTOR, ST VECTOR	300	2007		X	
FACTORY	50 HELIX	50	2004			X
FACTORY	50 REX	50	2004			X
FACTORY	100 HELIX	100	2004			X
FACTORY	100 REX	100	2004			X
FANTIC	125 REGOLARITÀ CASA	125	2008			X
FANTIC	125 SUPERSEI MOTARD	125	2008			X
HYOSUNG	GD 125 EXIV	125	2012			X
KAWASAKI	AR 50	50	1981	1982	X	
KAWASAKI	KMX 50	50	1988		X	
KAWASAKI	KSR 50 I (50)	50	1990	1991	X	X
KAWASAKI	AR 80	80	1981		X	

AGPA82						
MARCA Brand	MODELLO Model	CC	DA From	A To	ANT. Front	POST. Rear
KAWASAKI	KD 80 N1-N3	80	1988	1990	X	
KAWASAKI	KSR 80 II (80)	80	1990	1991	X	X
KAWASAKI	KX 80 E, G, H, J	80	1984	1987	X	
KAWASAKI	KX 80 L,N,R-R6	80	1988	1996	X	
KAWASAKI	KX 100	100	1988	1992	X	
KAWASAKI	KX 100 B5-B6	100	1995	1996	X	
KAWASAKI	KDX 125 A, B	125	1990	1994	X	
KAWASAKI	KMX 125	125	1986		X	
KAWASAKI	KX 125 B1	125	1982		X	
KAWASAKI	ZL 125 ELIMINATOR	125	1997		X	
KAWASAKI	KMX 200 A2, A3, A4	200	1988	1990	X	
KAWASAKI	KX 250 B1	250	1982		X	
KAWASAKI	KXT 250 A1 TECATE	250	1984			X
PGO	50 X-RIDER	50	2003			X
PGO	125 X-RIDER	125	2003			X
PGO	150 X-RIDER	150	2003			X
POLARIS	200 PHOENIX	200	2005	2009	X	
POLARIS	200 SAWTOOTH	200	2006		X	X
RIEJU	RS2 125 NKD	125	2006			X
RIEJU	RS2 125 PRO	125	2008			X
ROXON	150 QUAD SPORT SPIRIT	150	2006			X
SUZUKI	CC 50 TUNE	50	1992		X	
SUZUKI	LIDO 75 STYLE	75			X	
SUZUKI	RM 80	80	1996	2001		X
SUZUKI	RM 80 L,M,N,P,R,S	80	1990	1995		X
SUZUKI	ZZ 80 SEPIA	80	1990		X	
SUZUKI	RM 85 , L	85	2002	2004		X
TM	80 JUNIOR	80	1996	2000	X	
ZERO	DS ZF6.0		2010	2012		X
ZERO	DS ZF9.0		2010	2012		X
ZERO	MX		2010	2012		X
ZERO	S ZF6.0		2010	2012		X
ZERO	X		2010	2012		X
ZERO	XU		2011	2012		X

ACCOSSATO

PASTIGLIE BRAKE PADS

APPLICAZIONI PER CODICE PASTIGLIA / applications for pads code

MESCOLA ORGANICA organic compound
OR

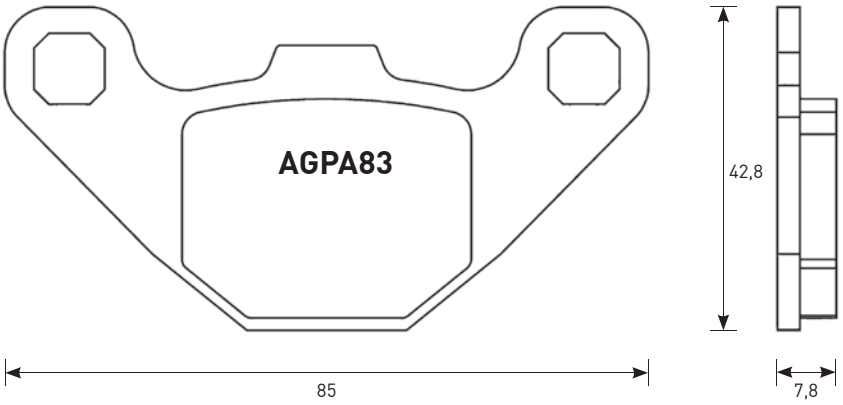

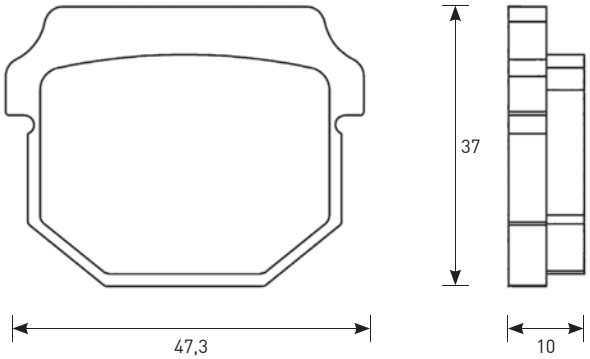

CROSS REFERENCE	
EBC	FA83/2
BREMBO	07HO1118
FERODO	FDB313
CL	3022
SBS	102

EQUIVALENT OE #	
OEM Suzuki	59300 3860
OEM Suzuki	69100 2822
OEM Suzuki	69100 2821

AGPA83						
MARCA Brand	MODELLO Model	CC	DA From	A To	ANT. Front	POST. Rear
ADLY	50 PANTHER	50	2001		X	
ADLY	50 SILVER FOX	50	2006		X	
ADLY	50 SUPER SONIC	50	2000		X	
ADLY	50 THUNDERBIKE	50	1997		X	
ADLY	RS 50 SUPER SONIC	50	2006		X	X
ADLY	100 PANTHER	100	2001		X	
ADLY	100 SILVER FOX	100	2006		X	
ADLY	100 SUPER SONIC	100	2001		X	
ADLY	100 THUNDERBIKE	100	2001		X	X
ADLY	125 SUPER SONIC	125	2001		X	
ADLY	125 THUNDERBIKE	125	2001		X	X
EASY RIDER	50 EASY RIDER	50	1999		X	
GILERA	50 EAGLET	50	1997			X
KREIDLER	25 FLORETT XL		1999		X	
KREIDLER	50 FLORETT	50	1999		X	

AGPA83						
MARCA Brand	MODELLO Model	CC	DA From	A To	ANT. Front	POST. Rear
MALAGUTI	125 BLOG	125	2010			X
MALAGUTI	160 BLOG	160	2010			X
PEUGEOT	50 BUXY (HENGTONG CAL.)	50	1994		X	
PEUGEOT	50 KISBEE	50	2010		X	
PEUGEOT	50 KISBEE RS	50	2011		X	
PEUGEOT	50 SPEEDAKE (HENGTONG CAL.)	50	1994		X	
PEUGEOT	50 SPEEDFIGHT LC, (HENGTONG CAL.)	50	1996		X	
PEUGEOT	50 SQUAB (HENGTONG CAL.)	50	1994		X	
PEUGEOT	50 TREKKER OFFROAD	50	1999		X	
PEUGEOT	50 VIVACITY (HENGTONG CAL.)	50	2005		X	
PEUGEOT	100 VIVACITY (HENGTONG CAL.)	100	2005		X	
SIAM	50 MAT	50	1997		X	
SIAM	100 MAT	100	1997		X	
SMC	50 EASY RIDER	50	1997		X	
SUZUKI	AJ 50 SEPIA	50	1992		X	
SUZUKI	AH 80 SCOOTER	80	1992		X	

PASTIGLIE BRAKE PADS

APPLICAZIONI PER CODICE PASTIGLIA / applications for pads code

MESCOLA ORGANICA organic compound
OR

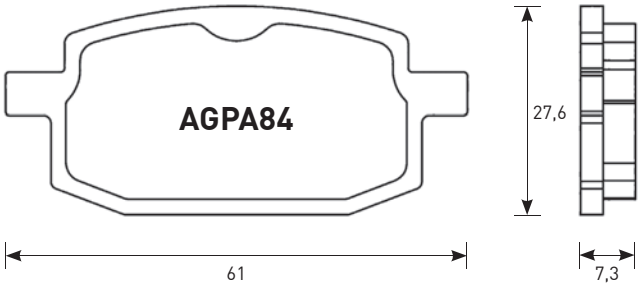

CROSS REFERENCE	
EBC	**SFA169**
OGNIBENE	**278**
BRAKING	**744**
NEWFREN	**.FD.0175**
BREMBO	**7041**
FERODO	**FDB636**
CL	**2696**
SBS	**111/619**

EQUIVALENT OE #	
OEM Yamaha	**5JU W0045 00**

AGPA84						
MARCA Brand	**MODELLO** Model	**CC**	**DA** From	**A** To	**ANT.** Front	**POST.** Rear
ADLY	**25 SILVER FOX**		**2000**	**2005**	**X**	
ADLY	**50 CAT**	**50**	**2001**		**X**	
ADLY	**50 COSY**	**50**	**2001**		**X**	
ADLY	**50 FOX**	**50**	**2000**		**X**	
ADLY	**50 FOX PLUS**	**50**	**2001**		**X**	
ADLY	**50 JET**	**50**	**1996**		**X**	
ADLY	**50 PISTA, PISTA TWIN LIGHT**	**50**	**1996**		**X**	
ADLY	**50 SILVER FOX**	**50**	**2000**	**2005**	**X**	
ADLY	**RT 50 ROAD TRACER**	**50**	**2002**		**X**	
ADLY	**70 FOX PLUS**	**70**	**2001**		**X**	
ADLY	**70 PISTA, PISTA TWIN LIGHT**	**70**	**2001**		**X**	
ADLY	**80 COSY**	**80**	**2001**		**X**	
ADLY	**RT 90 ROAD TRACER**	**90**	**2002**		**X**	
ADLY	**100 CAT**	**100**	**2001**		**X**	
ADLY	**100 JET**	**100**	**1996**		**X**	
ADLY	**100 SILVER FOX**	**100**	**2001**	**2005**	**X**	
ADLY	**RT 100 ROAD TRACER**	**100**	**2002**		**X**	
ADLY	**125 CAT**	**125**	**2001**		**X**	
BENELLI	**KB-X 50 RACE**	**50**			**X**	
BS VILLA	**AX 50**	**50**	**1993**		**X**	
BS VILLA	**GZ 50**	**50**	**1993**		**X**	
CAGIVA	**50 CITY**	**50**	**2008**		**X**	
FANTIC	**50 BIG WHEEL**	**50**	**1993**		**X**	
FANTIC	**50 GRINTA**	**50**	**1995**		**X**	
FANTIC	**50 LEADER**	**50**	**1995**		**X**	
FANTIC	**50 PONY SR**	**50**	**1993**		**X**	
FANTIC	**50 QUEENIE**	**50**	**1995**		**X**	
GARELLI	**50 STARTER**	**50**	**2002**		**X**	
GARELLI	**CPR 50**	**50**	**2002**		**X**	
GARELLI	**FX 50**	**50**	**2002**		**X**	
GARELLI	**PMX 50 RALLY**	**50**	**2000**		**X**	
GARELLI	**SR 50 PONY**	**50**	**1995**		**X**	
ITALJET	**YANKEE 8**		**1994**			**X**
ITALJET	**50 BAZOOKA**	**50**	**1993**		**X**	
ITALJET	**50 CRUISE**	**50**	**1995**		**X**	

AGPA84						
MARCA Brand	**MODELLO** Model	**CC**	**DA** From	**A** To	**ANT.** Front	**POST.** Rear
ITALJET	**50 PISTA 2**	**50**	**1992**		**X**	
ITALJET	**50 SCOOP**	**50**	**1993**		**X**	
LEM	**50 FLASH**	**50**	**1994**		**X**	
MBK	**50 TARGET**	**50**	**1992**		**X**	
MZ	**50 (MUZ) MOSKITO**	**50**	**1999**		**X**	
MZ	**125 (MUZ) MOSKITO**	**125**	**1999**		**X**	
PETERSON	**50 HURRICANE**	**50**	**1995**		**X**	
PETERSON	**SR 50 RACING**	**50**	**1995**		**X**	
PETERSON	**80 HURRICANE**	**80**	**1995**		**X**	
PETERSON	**SR 80 RACING**	**80**	**1995**		**X**	
PEUGEOT	**50 V-CLIC**	**50**	**2008**		**X**	
PGO	**50 BIG MAX**	**50**	**2002**		**X**	
PGO	**50 BIG MAX SPORT**	**50**	**1996**		**X**	
PGO	**50 COMET**	**50**	**1993**		**X**	
PGO	**50 EPS**	**50**	**1996**		**X**	
PGO	**50 HOT**	**50**	**1997**		**X**	
PGO	**50 MEGA**	**50**	**1996**		**X**	
PGO	**50 TORNADO**	**50**	**1996**		**X**	
PGO	**PMX 50**	**50**	**1997**		**X**	
PGO	**80 BIG MAX**	**80**	**1994**		**X**	
PGO	**90 BIG MAX**	**90**	**1997**		**X**	
PGO	**90 TORNADO**	**90**	**2000**		**X**	
PGO	**100 BIG MAX**	**100**	**1996**		**X**	
PGO	**PMX 110**	**110**	**2000**		**X**	
PGO	**125 KUNG FU CT**	**125**				**X**
PGO	**125 TORNADO**	**125**	**1996**		**X**	
SHE-LUNG	**50 FALCON**	**50**	**1997**		**X**	
SHE-LUNG	**125 MARS**	**125**	**1997**		**X**	
SIAMOTO	**50 BIRDIE**	**50**	**2002**		**X**	
SULA	**50 CITY BIRD**	**50**	**1999**		**X**	
TGB	**250 DYNASTY**	**250**	**2006**			**X**
YAMAHA	**50 AXIS PRO FOOT**	**50**	**1992**		**X**	
YAMAHA	**CR 50 TARGET**	**50**	**1991**		**X**	
YAMAHA	**CR 50 Z**	**50**	**1991**	**1992**	**X**	
YAMAHA	**JOG 50 (SPAIN)**	**50**	**1988**		**X**	
YAMAHA	**JOG 50 R**	**50**			**X**	
YAMAHA	**JOG-Z 50**	**50**	**1988**	**1989**	**X**	
YAMAHA	**RS 50 CHAMP**	**50**	**1988**		**X**	
YAMAHA	**YE 50 ZEST (JAPAN)**	**50**	**1992**	**1995**	**X**	
YAMAHA	**TZR 80**	**80**	**1992**		**X**	
YAMAHA	**YE 80 ZEST (JAPAN)**	**80**	**1993**		**X**	
YAMAHA	**90 AXIS PRO FOOT**	**90**	**1994**		**X**	
YAMAHA	**CR 90 TARGET**	**90**	**1991**		**X**	
YAMAHA	**JOG 90**	**90**	**1990**		**X**	
YAMAHA	**YA 90 AXIS**	**90**	**1990**		**X**	

ACCOSSATO

PASTIGLIE BRAKE PADS

APPLICAZIONI PER CODICE PASTIGLIA / applications for pads code

MESCOLA ORGANICA E SINTERIZZATA organic and sintered compound
OR / ST

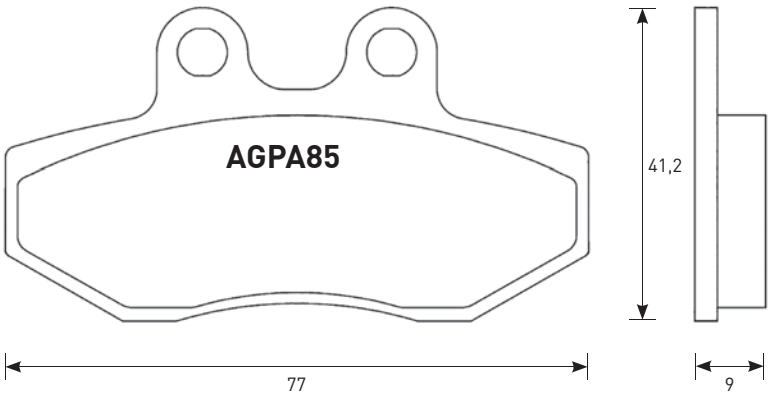

CROSS REFERENCE	
EBC	SFA393
OGNIBENE	3
BRAKING	3
NEWFREN	.FD.0414
BREMBO	7068
FERODO	FDB2225
CL	3069
SBS	190

EQUIVALENT OE #	
	5NWW004500

AGPA85						
MARCA Brand	MODELLO Model	CC	DA From	A To	ANT. Front	POST. Rear
MBK	YP 125 FLAME X	125	2005		X	
YAMAHA	NXC 125 CYGNUS X	125	2004	2010	X	

MESCOLA ORGANICA E SINTERIZZATA organic and sintered compound
OR / ST

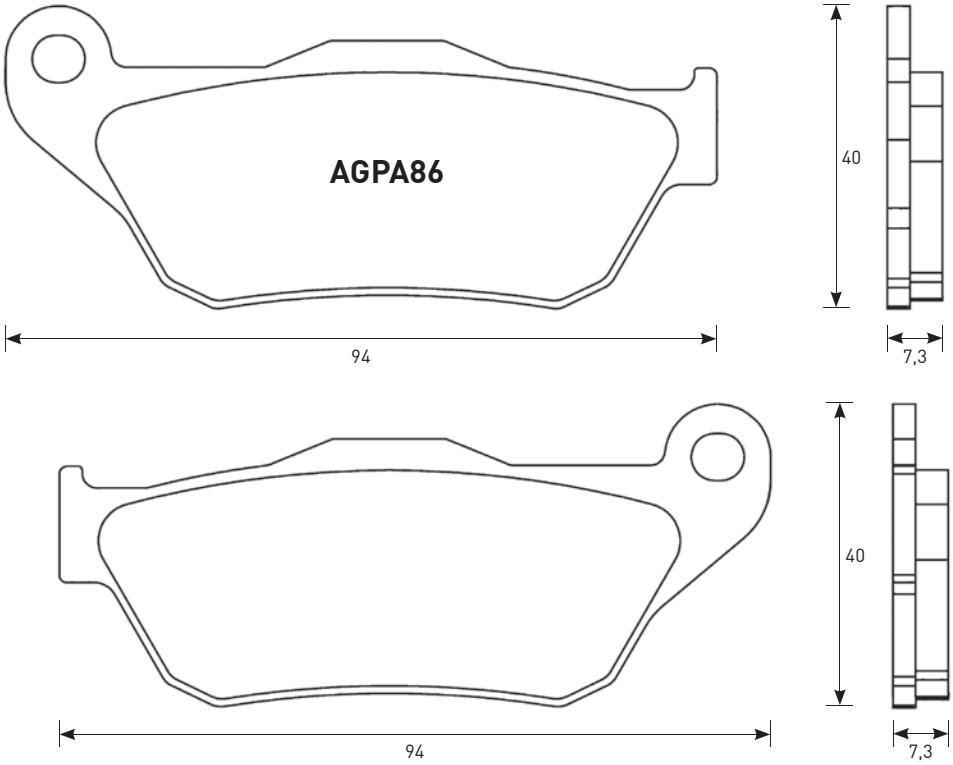

CROSS REFERENCE	
EBC	SFA430
OGNIBENE	335
BRAKING	926
NEWFREN	.FD.0396
BREMBO	7065
FERODO	FDB2208
CL	3085
SBS	194

EQUIVALENT OE #	
	1B9W004500

AGPA86						
MARCA Brand	MODELLO Model	CC	DA From	A To	ANT. Front	POST. Rear
MBK	125 SKYCRUISER	125	2006		X	
YAMAHA	YP R 125 X MAX	125	2006	2009	X	
YAMAHA	YP R 250 X MAX	125	2005	2009	X	

PASTIGLIE BRAKE PADS

APPLICAZIONI PER CODICE PASTIGLIA / applications for pads code

MESCOLA ORGANICA, SINTERIZZATA E EV1 organic, sintered and ev1 compounds
OR / ST / EV1

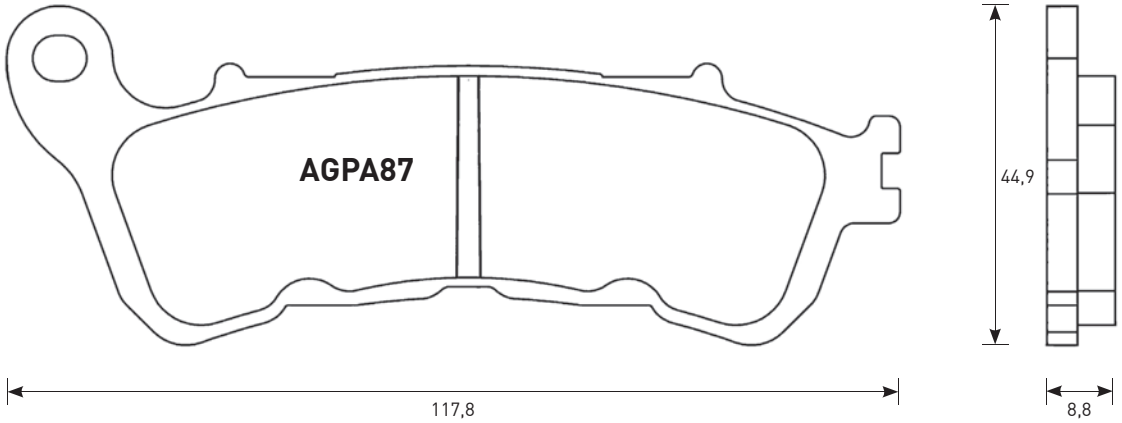

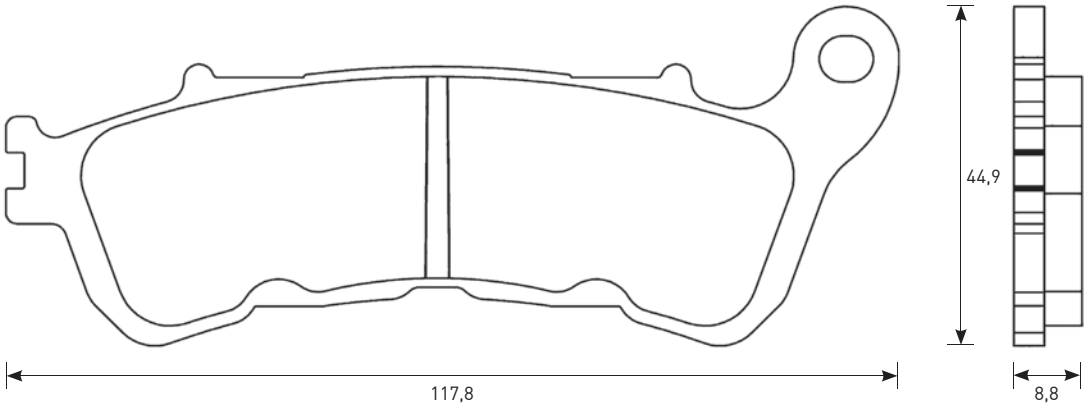

CROSS REFERENCE	
EBC	**FA388**
OGNIBENE	**307**
BRAKING	**910**
NEWFREN	**.FD.0385**
BREMBO	**7063**
FERODO	**FDB2211**
CL	**1159**
SBS	**828**

EQUIVALENT OE #	
OEM Honda	**06455 KSV J04**

AGPA87

MARCA Brand	MODELLO Model	CC	DA From	A To	ANT. Front	POST. Rear
HARLEY DAVIDSON	**XL 883 L SUPER LOW**	**883**	**2014**		**X**	
HARLEY DAVIDSON	**XL 883 N IRON**	**883**	**2014**		**X**	
HARLEY DAVIDSON	**XL 883 R ROADSTER**	**883**	**2014**		**X**	
HARLEY DAVIDSON	**XL 1200 C, CA, CB, CP CUSTOM**	**1200**	**2014**		**X**	
HARLEY DAVIDSON	**XL 1200 T SUPER LOW**	**1200**	**2015**		**X**	
HARLEY DAVIDSON	**XL 1200 V SEVENTY-TWO**	**1200**	**2014**		**X**	
HARLEY DAVIDSON	**XL 1200 X FORTY-EIGHT**	**1200**	**2014**		**X**	
HONDA	**CBR 250 R ABS (NISSIN CAL)**	**250**	**2011**	**2013**	**X**	
HONDA	**CBF 500 ABS**	**500**	**2004**		**X**	
HONDA	**CB 600 HORNET ABS**	**600**	**2007**		**X**	
HONDA	**CBF 600 N**	**600**	**2008**		**X**	
HONDA	**CBF 600 S**	**600**	**2008**		**X**	
HONDA	**CBR 600 F ABS**	**600**	**2011**		**X**	

AGPA87

MARCA Brand	MODELLO Model	CC	DA From	A To	ANT. Front	POST. Rear
HONDA	**DN-01 680**	**680**	**2008**		**X**	
HONDA	**NC 700 D INTEGRA**	**700**	**2012**	**2013**	**X**	
HONDA	**NC 700 SA ABS**	**700**	**2012**	**2013**	**X**	
HONDA	**NC 700 SD ABS**	**700**	**2012**	**2013**	**X**	
HONDA	**NC 700 XA ABS**	**700**	**2012**	**2013**	**X**	
HONDA	**NC 700 XD ABS**	**700**	**2012**	**2013**	**X**	
HONDA	**NT 700 DEAUVILLE ABS**	**700**	**2006**		**X**	
HONDA	**NT 700 V VARADERO, ABS**	**700**	**2010**		**X**	
HONDA	**XL 700 TRANSALP ABS**	**700**	**2008**		**X**	
HONDA	**800 CROSSRUNNER**	**800**	**2011**		**X**	
HONDA	**VFR 800**	**800**	**2006**	**2013**	**X**	
HONDA	**VFR 800 ABS**	**800**	**2006**	**2013**	**X**	
HONDA	**CB 1000 R ABS**	**1000**	**2008**		**X**	
HONDA	**CBF 1000 ABS**	**1000**	**2006**	**2011**	**X**	**X**
HONDA	**CBF 1000 F ABS**	**1000**	**2015**		**X**	
HONDA	**CBF 1000 LIMITED EDITION ABS**	**1000**	**2009**	**2014**	**X**	**X**
HONDA	**XL 1000 VARADERO**	**1000**	**2007**		**X**	
HONDA	**XL 1000 VARADERO ABS**	**1000**	**2004**		**X**	
HONDA	**CB 1100**	**1100**	**2013**		**X**	
HONDA	**VFR 1200 XC CROSSTOURER**	**1200**	**2012**		**X**	
HONDA	**VFR 1200 XDC CROSSTOURER W/DCT**	**1200**	**2012**		**X**	
HONDA	**CB 1300 S**	**1300**	**2011**		**X**	
HONDA	**CTX 1300**	**1300**	**2014**		**X**	
HONDA	**ST 1300 PAN EUROPEAN, ABS**	**1300**	**2008**		**X**	
HONDA	**VT 1300 FURY ABS**	**1300**	**2010**		**X**	
SUZUKI	**C 1800 R INTRUDER**	**1800**	**2008**		**X**	

ACCOSSATO

PASTIGLIE BRAKE PADS

APPLICAZIONI PER CODICE PASTIGLIA / applications for pads code

MESCOLA ORGANICA organic compound
OR

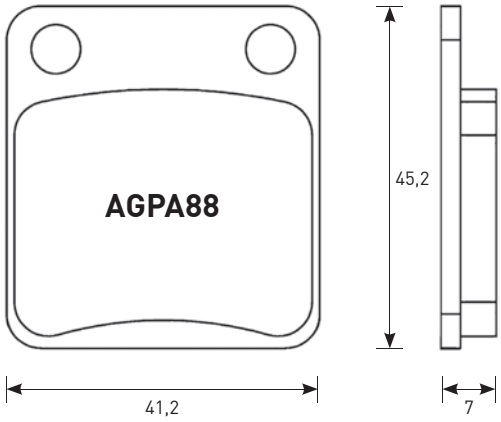

CROSS REFERENCE	
EBC	FA054
BRAKING	703
NEWFREN	.FD.0080
BREMBO	07HO09
FERODO	FDB250
CL	2408/3018
SBS	536

EQUIVALENT OE #	
OEM Honda	06455 GBF J01
OEM Honda	45105 GC4 603
OEM Honda	45112 GC4 601
OEM Honda	45105 GBF 405
OEM Kawasaki	43082 1212

AGPA88						
MARCA Brand	MODELLO Model	CC	DA From	A To	ANT. Front	POST. Rear
DAELIM	100 ALTINO	100	1999		X	
DAELIM	NF 125	125	2003		X	
DAELIM	VS 125 , EVOLUTION	125	1995		X	
HONDA	MBX 80 FWD	80	1983	1986	X	
HONDA	CB 125 RS	125	1983		X	
HONDA	CG 125	125	2004		X	
HONDA	CG 150	150	2004		X	
HONDA	ATC 250 R	250	1981		X	
HUSQVARNA	ALL MODELS CR,TC,TE, WR		1992	1994	X	
HYOSUNG	TE 400	400	2005	2006	X	
HYOSUNG	TE 450	450	2007		X	
KAWASAKI	BN 125 ELIMINATOR A1-A2	125	1998	1999	X	
KAWASAKI	KLX 125	125	2010			X
KAWASAKI	KLX 125 D-TRACKER	125	2010			X
KAWASAKI	KVF 300 BRUTE FORCE	300	2013		X	
KAWASAKI	KVF 360 PRAIRIE 2X4, 4X4	360	2003		X	
KAWASAKI	KVF 400 A1, A2, B1 PRAIRIE	400	1997	1998	X	
KAWASAKI	KVF 400 C1, C2 PRAIRIE 4X4	400	1999		X	
KAWASAKI	KVF 400 D1, D2 PRAIRIE 2X4	400	1999		X	

AGPA88						
MARCA Brand	MODELLO Model	CC	DA From	A To	ANT. Front	POST. Rear
PGO	50 BUGRIDER	50	2006			X
PGO	BR 150 BUGXTER	150	2005			X
SUZUKI	DR 125	125	1986	2002	X	
SUZUKI	GX 125 R	125	1988		X	
SUZUKI	RH 125 X	125	1987		X	
SUZUKI	SP 125 G,H,J	125	1986	1988	X	
SUZUKI	SX 125 R	125	1985		X	
SUZUKI	TS 125 X	125	1985	1989	X	
SUZUKI	DR 200 G,H,J	200	1986	1988	X	
SUZUKI	DR 200 S	200	2015		X	
SUZUKI	DR 200 SE	200	1996	2013	X	
SUZUKI	DR 200 T	200	1996		X	
SUZUKI	SP 200 G,H,J	200	1986	1988	X	
SUZUKI	SX 200 R	200	1985		X	
SUZUKI	RH 240 X	240	1987		X	
SUZUKI	TS 240 X	240	1985		X	
SUZUKI	DR 250 F	250	1985		X	
SUZUKI	DR 250 S	250	1986	1989	X	
SUZUKI	LT-F 250 OZARK	250	2003		X	
SUZUKI	LT-Z 250 QUAD SPORT	250	2004		X	
SUZUKI	RH 250	250	1985		X	
SUZUKI	SP 250 F	250	1985		X	
SUZUKI	TS 250 X	250	1985	1989	X	
SUZUKI	LT-A 400 EIGER 2WD/4WD	400	2002	2007	X	
SUZUKI	LT-F 400 EIGER 2WD/4WD	400	2002		X	
SUZUKI	LT-A 500 F VINSON	500	2002		X	
YAMAHA	SX 125 R	125	1988		X	
YAMAHA	SX 200 R	200	1988		X	
YAMAHA	YFS 200 R BLASTER	200	2003	2006	X	
YAMAHA	YFM 250 AN BRUIN 2X4	250	2005		X	
YAMAHA	YFM 250 BEAR TRACKER	250	2001		X	
YAMAHA	YFM 300 WARRIOR	300	1989		X	
YAMAHA	YFM 350 BRUIN 2X4, 4X4	350	2004		X	
YAMAHA	YFM 350 FWB L, LC BIG BEAR	350	1999		X	
YAMAHA	YFM 350 FXG-FXM WOLVERINE	350	1995		X	
YAMAHA	YFM 350 XG, XH WARRIOR	350	1995	1996	X	
YAMAHA	YFM 350 XW, XA-M WARRIOR	350	1989		X	X
YAMAHA	YFZ 350 A-M BANSHEE	350	1990	2006	X	
YAMAHA	YFM 400 FAM KODIAK	400	2000		X	
YAMAHA	YFM 400 FAR KODIAK AUTOMATIC	400	2003		X	
YAMAHA	YFM 400 FWN BIG BEAR 4WD	400	2000		X	
YAMAHA	YFM 400 FWNH BIG BEAR-BUCKMASTER 4WD	400	2000		X	
YAMAHA	YFM 400 N BIG BEAR 2WD	400	2000		X	
YAMAHA	YFM 450 FA_ KODIAK	450	2003		X	
YAMAHA	YFM 450 WOLVERINE	450	2006		X	

PASTIGLIE BRAKE PADS

APPLICAZIONI PER CODICE PASTIGLIA / applications for pads code

MESCOLA ORGANICA organic compound
OR

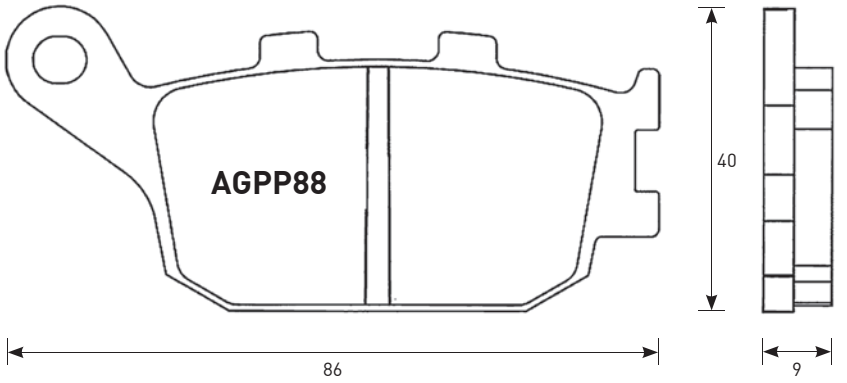

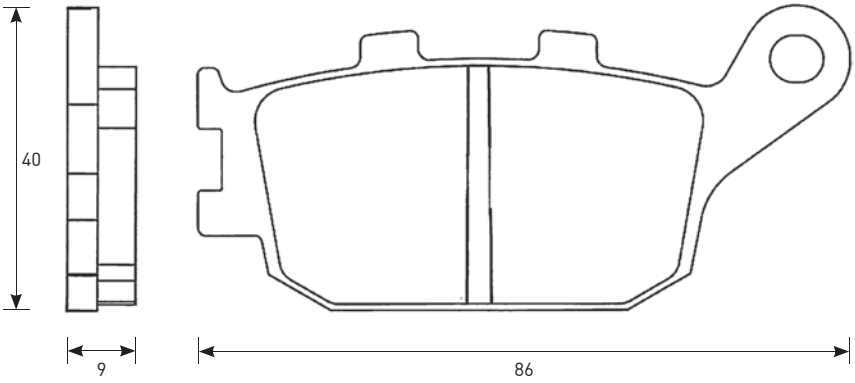

CROSS REFERENCE	
EBC	**FA174**
OGNIBENE	**244**
BRAKING	**742**
NEWFREN	**.FD.0172**
BREMBO	**07H036**
FERODO	**FDB754**
CL	**2296**
SBS	**657**

EQUIVALENT OE #	
OEM Honda	**06435 MFG D01**
OEM Honda	**06435 MFG D02**
OEM Honda	**43105 MW0 415**
OEM Honda	**06435 MFG D02**
OEM Honda	**06435 MEJ 016**
OEM Honda	**06435 KFK 006**
OEM Honda	**06435 KFK 016**
OEM Honda	**06435 MEE 016**
OEM Honda	**43106 MV9 008**
OEM Honda	**43105 MW0 405**
OEM Honda	**43105 MW0 415**
OEM Honda	**43105 MV9 008**
OEM Kawasaki	**43082 0073**
OEM Suzuki	**69100 06830**
OEM Suzuki	**69100 04820**
OEM Suzuki	**69100 16851**
OEM Suzuki	**69101 44850**

AGPP88						
MARCA Brand	**MODELLO** Model	**CC**	**DA** From	**A** To	**ANT.** Front	**POST.** Rear
HONDA	**CBR 400 F**	**400**	**1992**			**X**
HONDA	**CBF 500**	**500**	**2004**			**X**
HONDA	**CBF 500 ABS**	**500**	**2004**			**X**
HONDA	**CB 600 HORNET**	**600**	**1998**	**2006**		**X**
HONDA	**CB 600 HORNET (JAPAN)**	**600**	**1998**			**X**
HONDA	**CB 600 HORNET ABS**	**600**	**2007**			**X**
HONDA	**CB 600 HORNET S**	**600**	**2000**			**X**

AGPP88						
MARCA Brand	**MODELLO** Model	**CC**	**DA** From	**A** To	**ANT.** Front	**POST.** Rear
HONDA	**CBF 600**	**600**	**2004**	**2007**		**X**
HONDA	**CBF 600 N**	**600**	**2008**			**X**
HONDA	**CBF 600 S**	**600**	**2008**			**X**
HONDA	**CBR 600 F ABS**	**600**	**2011**			**X**
HONDA	**CBR 600 F, SUPER SPORT**	**600**	**1991**	**1994**		**X**
HONDA	**CBR 600 F3**	**600**	**1995**	**1998**		**X**
HONDA	**CBR 600 F4, F4 SPORT**	**600**	**1999**			**X**
HONDA	**CBR 600 RR**	**600**	**2003**	**2004**		**X**
HONDA	**CBR 600 RR (RAD.CAL)**	**600**	**2005**	**2006**		**X**
HONDA	**FMX 650**	**650**	**2005**	**2008**		**X**
HONDA	**NT 650 V DEAUVILLE**	**650**	**2001**			**X**
HONDA	**NC 700 D INTEGRA**	**700**	**2012**	**2013**		**X**
HONDA	**NC 700 SA ABS**	**700**	**2012**	**2013**		**X**
HONDA	**NC 700 SD ABS**	**700**	**2012**	**2013**		**X**
HONDA	**NC 700 XA ABS**	**700**	**2012**	**2013**		**X**
HONDA	**NC 700 XD ABS**	**700**	**2012**	**2013**		**X**
HONDA	**XL 700 TRANSALP ABS**	**700**	**2008**			**X**
HONDA	**CB 750 N, F, SEVEN FIFTY**	**750**	**1992**			**X**
HONDA	**NR 750**	**750**	**1992**			**X**
HONDA	**CB 900 HORNET**	**900**	**2002**			**X**
HONDA	**CBR 900 RR FIREBLADE**	**900**	**1998**	**2003**		**X**
HONDA	**CBR 900 RR, FIREBLADE**	**900**	**1992**	**1997**		**X**

ACCOSSATO

PASTIGLIE BRAKE PADS

APPLICAZIONI PER CODICE PASTIGLIA / applications for pads code

AGPP88						
MARCA Brand	MODELLO Model	CC	DA From	A To	ANT. Front	POST. Rear
HONDA	CB 1000 F (BIG ONE)	1000	1993	1997		X
HONDA	CBF 1000	1000	2006	2011		X
HONDA	CBF 1000 F ABS	1000	2015			X
HONDA	CBF 1000 LIMITED EDITION	1000	2009	2014		X
HONDA	CBR 1000 RR FIREBLADE (RAD.CAL)	1000	2004	2005		X
HONDA	VTR 1000 F FIRESTORM	1000	1997			X
HONDA	VTR 1000 SP-1, SP-2	1000	2000			X
HONDA	CB 1100	1100	2013			X
HONDA	CB 1100 , EX	1100	2014			X
HONDA	VT 1100 C2 SHADOW A.C.E.	1100	1995			X
HONDA	VT 1100 C2 Y	1100	2000			X
HONDA	VT 1100 C3 SHADOW AERO	1100	1998			X
HONDA	VT 1100 T SHADOW	1100	1998			X
HONDA	CB 1300	1300	2005			X
HONDA	CB 1300 S	1300	2011			X
HONDA	VT 1300 FURY	1300	2010			X
HONDA	VTX 1300 C	1300	2004			X
HONDA	VTX 1300 S	1300	2003			X
KAWASAKI	Z 750 , ABS	750	2007			X
KAWASAKI	1000 VERSYS	1000	2012	2015		X
KAWASAKI	1000 VERSYS LT	1000	2015			X
KAWASAKI	KLV 1000 LEFT/REAR	1000	2004			X
KAWASAKI	Z 1000	1000	2007	2009		X
KAWASAKI	Z 1000 (RAD.CAL)	1000	2010	2013		X
SUZUKI	GW 250 INAZUMA	250	2012			X
SUZUKI	GW 250 INAZUMA F	250	2015			X
SUZUKI	FZ6 600	600	2004			X
SUZUKI	FZ6 600 FAZER	600	2004			X
SUZUKI	FZ6 600 FAZER S2	600	2007			X
SUZUKI	FZ6 600 FAZER S2 ABS	600	2007			X
SUZUKI	FZ6 600 S2	600	2007			X
SUZUKI	FZ6 600 S2 ABS 07- LS	600	2007			X
SUZUKI	YZF 600 R6	600	2003	2004		X
SUZUKI	YZF 600 R6 (RAD.CAL)	600	2005	2006		X
SUZUKI	DL 650 V-STROM LEFT/REAR	650	2004			X
SUZUKI	DL 650 V-STROM XT LEFT/REAR	650	2015			X
SUZUKI	GSF 650 BANDIT	650	2007			X

AGPP88						
MARCA Brand	MODELLO Model	CC	DA From	A To	ANT. Front	POST. Rear
SUZUKI	GSF 650 BANDIT / S BANDIT LEFT/REAR ABS	650	2006			X
SUZUKI	GSF 650 BANDIT ABS	650	2007			X
SUZUKI	GSF 650 S BANDIT	650	2007			X
SUZUKI	GSF 650 S BANDIT ABS	650	2007			X
SUZUKI	GSX 650 F	650	2008			X
SUZUKI	SV 650 ,S LEFT/REAR	650	2003			X
SUZUKI	MT-07 700	700	2014			X
SUZUKI	MT-07 700 MOTO CAGE	700	2015			X
SUZUKI	GSR 750 LEFT/REAR	750	2011			X
SUZUKI	800 FAZER 8	800	2010			X
SUZUKI	FZ8 800	800	2010			X
SUZUKI	MT-09 850 (RAD.CAL)	850	2014			X
SUZUKI	MT-09 850 SPORT TRACKER (RAD.CAL)	850	2015			X
SUZUKI	MT-09 850 STREET RALLY (RAD.CAL)	850	2014			X
SUZUKI	MT-09 850 TRACER (RAD.CAL)	850	2015			X
SUZUKI	DL 1000 V-STROM LEFT/REAR	1000	2002	2013		X
SUZUKI	FZ1 1000 FAZER	1000	2006			X
SUZUKI	SV 1000 , S	1000	2003			X
SUZUKI	YZF 1000 R1 (RAD. CAL)	1000	2004	2006		X
SUZUKI	YZF 1000 R1 (RAD. CAL) (4-PAD)	1000	2007	2014		X
SUZUKI	YZF 1000 R1 (RAD. CAL) (4-PAD) ABS	1000	2012	2014		X
SUZUKI	YZF 1000 R1 SP (RAD. CAL)	1000	2006			X
SUZUKI	GSF 1200 BANDIT	1200	2006			X
SUZUKI	GSF 1200 S BANDIT	1200	2006			X
SUZUKI	GSF 1250 BANDIT ABS	1250	2006			X
SUZUKI	GSF 1250 S BANDIT ABS	1250	2006			X
SUZUKI	GSF 1250 S BANDIT ABS	1250	2015			X
SUZUKI	GSX 1250 FA	1250	2010			X
SUZUKI	1300 B-KING	1300	2007			X

PASTIGLIE BRAKE PADS

APPLICAZIONI PER CODICE PASTIGLIA / applications for pads code

MESCOLA ORGANICA E SINTERIZZATA organic and sintered compound
OR / ST

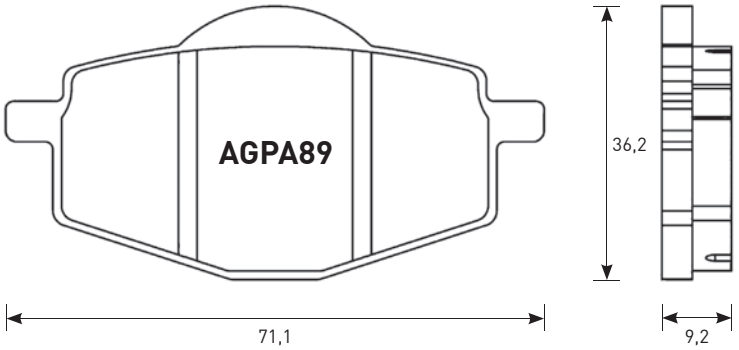

CROSS REFERENCE	
EBC	FA101
OGNIBENE	229
BRAKING	685
NEWFREN	.FD.0124
BREMBO	07YA1407
FERODO	FDB383
CL	2284/3008
SBS	107/575

EQUIVALENT OE #	
OEM Yamaha	3BN W0045 01
OEM Yamaha	4S5 W0045 00
OEM Yamaha	34X W0046 02
OEM Yamaha	34X W0046 01
OEM Yamaha	3XP W0046 00

AGPA89						
MARCA Brand	MODELLO Model	CC	DA From	A To	ANT. Front	POST. Rear
GARELLI	XO ELECTRIC		2012			X
GARELLI	125 XO	125	2012			X
GARELLI	150 XO	150	2012			X
GARELLI	200 XO	200	2012			X
GILERA	125 APACHE	125	1991			X
GILERA	RC 125 TOP RALLY	125	1990			X
GILERA	250 OREGON QUAD	250	2007		X	
GILERA	RC 600 TOP RALLY	600	1990			X
MALAGUTI	125 CENTRO IE	125	2008			X
MALAGUTI	160 CENTRO IE	160	2008			X
MBK	100 BOOSTER	100	2001		X	
MBK	125 FLAME R/F	125	1995	2003	X	
MBK	150 VERTEX	150	1997		X	
YAMAHA	50 CYGNUS	50	1996		X	
YAMAHA	DT 50 R	50	1989	1997	X	
YAMAHA	TDR 50	50	1990		X	X
YAMAHA	TZM 50 R	50	1994		X	
YAMAHA	TZR 50	50	1990	1992	X	
YAMAHA	YSR 50 A, B	50	1990	1991	X	
YAMAHA	YSR 50 D	50	1992		X	
YAMAHA	YSR 50 T,U,W	50	1987	1989	X	
YAMAHA	DT 80 LC-2	80	1985	1992	X	
YAMAHA	RD 80 LC	80	1983		X	
YAMAHA	TDR 8		1989		X	X
YAMAHA	TZR 80	80	1992			X
YAMAHA	YSR 80	80	1986		X	
YAMAHA	105 CRYPTON	114	1998		X	
YAMAHA	DT 125 LC	125	1985	1987	X	
YAMAHA	DT 125 R, ELECTRIC	125	1988	2003	X	X

AGPA89						
MARCA Brand	MODELLO Model	CC	DA From	A To	ANT. Front	POST. Rear
YAMAHA	DT 125 R	125	1996	1998	X	X
YAMAHA	SR 125 FLAME	125	1996		X	
YAMAHA	TDR 125 R	125	1993	2003		X
YAMAHA	XC 125 CYGNUS F	125	2000		X	
YAMAHA	XC 125 F	125	2000		X	
YAMAHA	XC 125 TR CYGNUS, R	125	1996		X	
YAMAHA	YBR 125	125	2006	2007	X	
YAMAHA	YZ 125 U	125	1988			X
YAMAHA	XC 150 FLY ONE	150	1992		X	
YAMAHA	XC 150 FLY ONE R	150	1998		X	
YAMAHA	RT 180 G,H	180	1995	1996	X	
YAMAHA	DT 200 R	200	1985	1987	X	
YAMAHA	DT 200 R	200	1989		X	X
YAMAHA	IT 200	200	1985		X	
YAMAHA	TT 200	200	1986		X	
YAMAHA	225 SEROW	225	1985		X	
YAMAHA	TT 225 S,T	225	1986	2000	X	
YAMAHA	TTR 225	225	2001		X	
YAMAHA	XT 225 E-H	225	1992	2000	X	
YAMAHA	XT 225 SEROW	225	1986		X	
YAMAHA	IT 250	250	1985		X	
YAMAHA	TY 250 Z (SCOTTISH)	250	1996		X	
YAMAHA	YTZ 250 N, S TRI MOTO	250	1985	1986	X	X
YAMAHA	YZ 250 U	250	1988			X
YAMAHA	XT 350	350	1985	1990	X	
YAMAHA	XT 350 B-H	350	1991	1996	X	
YAMAHA	YFM 350 XT, XU WARRIOR	350	1987	1988	X	
YAMAHA	YFZ 350 T-W BANSHEE	350	1987	1989	X	
YAMAHA	400 ARTESIA	400	1991			X
YAMAHA	XT 400	400	1986		X	
YAMAHA	WR 500 B	500	1991			X
YAMAHA	XT 500	500	1986		X	
YAMAHA	XT 500 E (AUSTRIA)	500	1990	1996		X
YAMAHA	DT 600 N	600	1985		X	
YAMAHA	TT 600	600	1985	1988	X	
YAMAHA	XT 600 E	600	1990			X
YAMAHA	XT 600 K	600	1991			X
YAMAHA	XT 600 Z, TENERE	600	1987	1990		X
YAMAHA	XTZ 660 TENERE	660	1991	1998		X

ACCOSSATO

PASTIGLIE BRAKE PADS

APPLICAZIONI PER CODICE PASTIGLIA / applications for pads code

MESCOLA ORGANICA E SINTERIZZATA organic and sintered compound
OR / ST

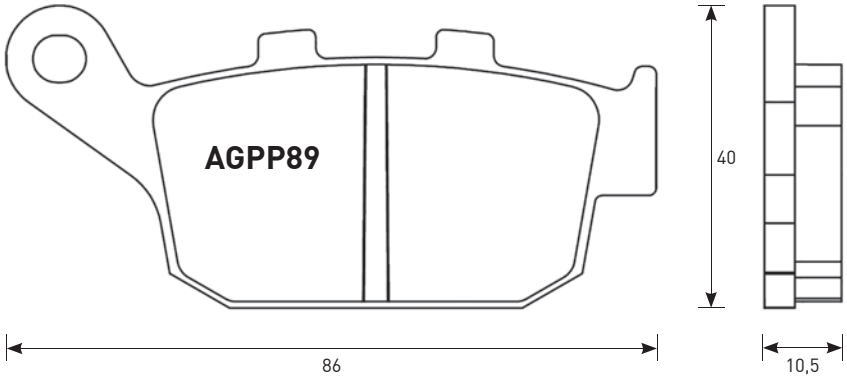

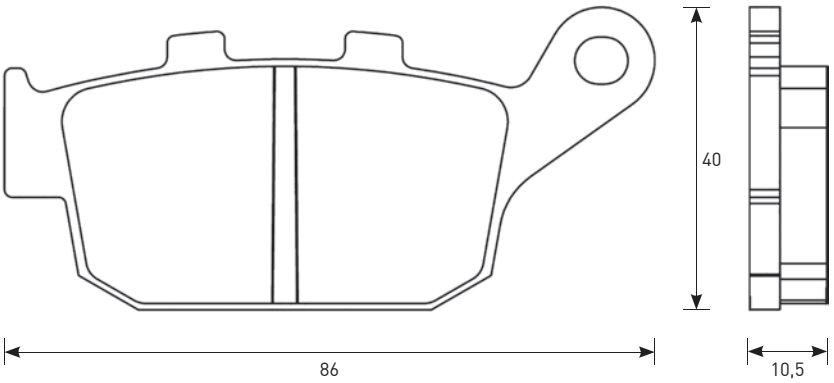

CROSS REFERENCE	
EBC	FA140
BRAKING	711
NEWFREN	.FD.0136
BREMBO	07HO2711
FERODO	FDB531
CL	2298
SBS	614

EQUIVALENT OE #	
OEM Honda	06435 KT7 405
OEM Honda	06435 KT7 415
OEM Honda	43105 MY1 405
OEM Moto Guzzi	30654630
OEM Triumph	T2020602
OEM Yamaha	20S-W0046-00

AGPP89						
MARCA Brand	MODELLO Model	CC	DA From	A To	ANT. Front	POST. Rear
BUELL	500 BLAST	500	2001	2009		X
BUELL	XB9R 984 FIREBOLT	984	2002	2010		X
BUELL	XB9S 984 LIGHTNING	984	2003	2010		X
BUELL	XB9SX 984 CITYX	984	2005	2010		X
BUELL	M2 1200 CYCLONE	1200	1998	2002		X
BUELL	S1 1200 LIGHTNING	1200	1998	2002		X
BUELL	S1 1200 WHITELIGHTNING	1200	1998	2002		X
BUELL	S3 1200 THUNDERBOLT	1200	1998	2002		X
BUELL	X1 1200 LIGHTNING	1200	2001	2002		X
BUELL	XB12R 1200 FIREBOLT	1200	2004	2010		X
BUELL	XB12S 1200 LIGHTNING	1200	2004	2008		X
BUELL	XB12SCG 1200 LIGHTNING	1200	2006	2010		X
BUELL	XB12SS 1200 LIGHTNING LONG	1200	2006	2010		X
BUELL	XB12STT 1200 SUPER TT	1200	2007	2010		X
BUELL	XB12X 1200 ULYSSES	1200	2006	2010		X
HONDA	CBR 250 HURRICANE	250	1987			X
HONDA	CBR 250 R, RR	250	1990			X

AGPP89						
MARCA Brand	MODELLO Model	CC	DA From	A To	ANT. Front	POST. Rear
HONDA	CBR 250 RJ	250	1988			X
HONDA	NSR 250 R, SP	250	1990			X
HONDA	NSR 250 RJ	250	1988			X
HONDA	RS 250 R	250	1991	1992		X
HONDA	VT 250 SPADA	250	1989			X
HONDA	VTR 250	250	1998			X
HONDA	CB 400 SUPER FOUR	400	1992	1995		X
HONDA	CB-1 400 (CB 400 F)	400	1989	1990		X
HONDA	CBR 400 RR	400	1987	1989		X
HONDA	NTV 400 BROS II	400	1988			X
HONDA	VFR 400 R	400	1991	1992		X
HONDA	VRX 400 T ROADSTAR	400	1995			X
HONDA	NX 500 DOMINATOR (AUSTRIA)	500	1988	1996		X
HONDA	NTV 600 BROS I	600	1988			X
HONDA	NTV 600 REVERE	600	1988	1992		X
HONDA	XL 600 V, TRANSALPINO	600	1991	1999		X
HONDA	NT 650 HAWK GT	650	1988	1991		X
HONDA	NT 650 V DEAUVILLE	650	1998	2000		X
HONDA	NTV 650	650	1994			X
HONDA	NTV 650 BROS	650	1988	1997		X
HONDA	NTV 650 REVERE	650	1988	1993		X
HONDA	NX 650 DOMINATOR	650	1993	1996		X
HONDA	NX 650 DOMINATOR J-K	650	1988	1992		X
HONDA	XL 650 V TRANSALP	650	2000			X
HONDA	XRV 650 AFRICA TWIN	650	1988	1989		X
HONDA	NC 700 S	700	2012	2013		X
HONDA	NC 700 X	700	2012	2013		X

PASTIGLIE BRAKE PADS

APPLICAZIONI PER CODICE PASTIGLIA / applications for pads code

AGPP89						
MARCA Brand	**MODELLO** Model	**CC**	**DA** From	**A** To	**ANT.** Front	**POST.** Rear
HONDA	VFR 700 F INTERCEPTOR	700	1988	1989		X
HONDA	XL 700 TRANSALP	700	2008			X
HONDA	XRV 750 AFRICA TWIN	750	1990	2003		X
MOTO GUZZI	1000 QUOTA	1000	1992			X
SUZUKI	XF 650 FREEWIND	650	1997	2002		X
TRIUMPH	600 DAYTONA	600	2004			X
TRIUMPH	600 SPEED FOUR	600	2003			X
TRIUMPH	TT 600	600	2000	2003		X
TRIUMPH	650 DAYTONA	650	2005			X
TRIUMPH	675 DAYTONA (RAD.CAL)	675	2006	2008		X
TRIUMPH	675 DAYTONA R TRIPLE (RAD.CAL)	675	2011	2012		X

AGPP89						
MARCA Brand	**MODELLO** Model	**CC**	**DA** From	**A** To	**ANT.** Front	**POST.** Rear
TRIUMPH	675 DAYTONA TRIPLE (RAD.CAL)	675	2009	2012		X
TRIUMPH	675 STREET TRIPLE	675	2008	2012		X
TRIUMPH	675 STREET TRIPLE R	675	2009	2012		X
TRIUMPH	800 TIGER	800	2011	2014		X
TRIUMPH	800 TIGER XC	800	2011	2015		X
TRIUMPH	800 TIGER XC ABS	800	2012	2014		X
TRIUMPH	800 TIGER XCR	800	2015			X
TRIUMPH	800 TIGER XR	800	2015			X
TRIUMPH	800 TIGER XRX	800	2015			X
YAMAHA	FZ6R 600	600	2009			X
YAMAHA	XJ6 600 DIVERSION	600	2009			X

MESCOLA ORGANICA, SINTERIZZATA, E STMX organic, sintered and stmx compounds
OR / ST / STMX

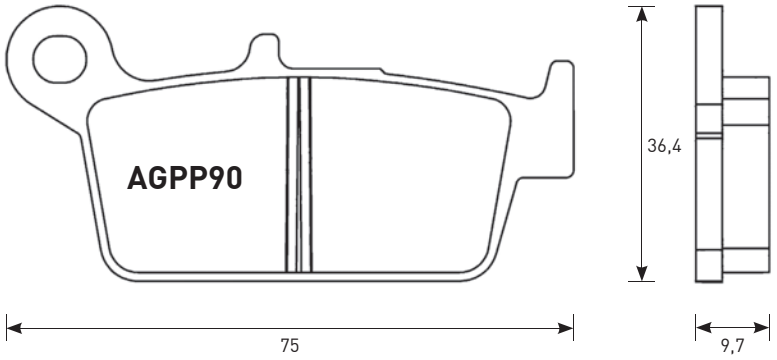

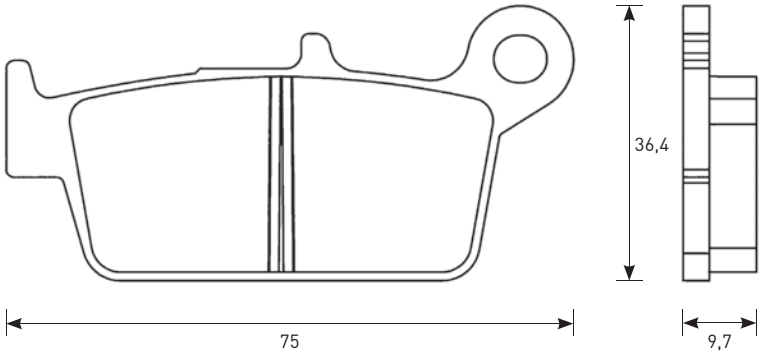

CROSS REFERENCE	
EBC	FA131
OGNIBENE	219
BRAKING	701
NEWFREN	.FD.0114
BREMBO	07HO2608
FERODO	FDB539
CL	2314/3014
SBS	604

EQUIVALENT OE #	
OEM Honda	
OEM Honda	
OEM Honda	
OEM Honda	
OEM Kawasaki	
OEM Kawasaki	
OEM Kawasaki	
OEM Kawasaki	
OEM Suzuki	
OEM Suzuki	
OEM Suzuki	
OEM Suzuki	
OEM Suzuki	
OEM Suzuki	

AGPP90						
MARCA Brand	**MODELLO** Model	**CC**	**DA** From	**A** To	**ANT.** Front	**POST.** Rear
AJP	PR5 250 ENDURO	250	2009			X
AJP	PR5 250 SUPERMOTARD	250	2009			X
BIMOTA	BBX 508 ENDURO		2012			X
CPI	125 SAHEL	125	2002			X
FANTIC	50 REGOLARITÀ COMPETIZIONE	50	2008			X
FANTIC	MX 50 REGOLARITÀ COMPETIZIONE	50	2008			X
FANTIC	MX 65 REGOLARITÀ COMPETIZIONE	65	2008			X
FANTIC	80 REGOLARITÀ COMPETIZIONE	80	2008			X

ACCOSSATO

PASTIGLIE BRAKE PADS

APPLICAZIONI PER CODICE PASTIGLIA / applications for pads code

AGPP90						
MARCA Brand	MODELLO Model	CC	DA From	A To	ANT. Front	POST. Rear
FANTIC	MX 85 REGOLARITÀ COMPETIZIONE	85	2008			X
FANTIC	125 REGOLARITÀ COMPETIZIONE	125	2008			X
GASGAS	EC 125	125	2000			X
GASGAS	MC 125	125	2003			X
GASGAS	SM 125	125	2002			X
GASGAS	EC 200	200	2000			X
GASGAS	EC 200 HOBBY	200	2007			X
GASGAS	EC 250	250	2000	2011		X
GASGAS	EC 250 FSE	250	2002			X
GASGAS	MC 250	250	2000			X
GASGAS	SM 250	250	2002			X
GASGAS	EC 300	300	2000	2011		X
GASGAS	400 PAMPERA	400	2006			X
GASGAS	EC 400 FSE	400	2002			X
GASGAS	SM 400 FSE	400	2002			X
GASGAS	EC 450 FSE	450	2003			X
GASGAS	EC 450 FSR	450	2007			X
GASGAS	SM 450 FSE	450	2003	2006		X
GASGAS	SM 450 FSR	450	2007			X
GASGAS	EC 515 FSR	515	2008			X
HM	CRE 50	50	2006			X
HM	125 SUPERMOTARD	125	2000	2002		X
HM	CRE 125 ENDURO	125	1995	2001		X
HM	CRE 125 SUPERMOTARD	125	2003			X
HM	250 SUPERMOTARD	250	2000	2002		X
HM	CRE 250 ENDURO	250	1995	2001		X
HM	CRE 250 SUPERMOTARD	250	2003			X
HONDA	CRM 75 R	75	1990	1994		X
HONDA	CR 80 R, RB	80	1992	2002		X
HONDA	CRM 80	80	1989			X
HONDA	CR 85 R, R EXPERT	85	2003			X
HONDA	NSF 100	100	2006			X
HONDA	CR 125 R	125	1995	2001		X
HONDA	CR 125 RH, RJ, RK	125	1987	1994		X
HONDA	CRF 230 L	230	2008			X

AGPP90						
MARCA Brand	MODELLO Model	CC	DA From	A To	ANT. Front	POST. Rear
HONDA	CRF 230 M	230	2009			X
HONDA	SL 230	230	1997			X
HONDA	CR 250 R	250	1987	2001		X
HONDA	XLR 250 R SPL	250	1994			X
HONDA	XR 250 L	250	1991	1997		X
HONDA	XR 250 R	250	1990	1995		X
HONDA	XR 250 S, R	250	1996			X
HONDA	XR 300	300	2010			X
HONDA	XR 400 R	400	1996			X
HONDA	XR 400 SUPERMOTARD	400	2000			X
HONDA	XR 440 R	440	2000			X
HONDA	CR 500 R	500	1987	2001		X
HONDA	XR 600 R	600	1991	2000		X
HONDA	XR 650 L	650	1993			X
HONDA	XR 650 R	650	2000			X
HYOSUNG	XRX 400	400	2005			X
KAWASAKI	KX 125 K2-M2	125	1995			X
KAWASAKI	KLX 250	250	1998	2007		X
KAWASAKI	KLX 250 S	250	2009			X
KAWASAKI	KLX 250 SF	250	2009			X
KAWASAKI	KX 250 K2-M2	250	1995			X
KAWASAKI	KLX 300 R A2	300	1997			X
KAWASAKI	KLX 400 R	400	2003			X
KAWASAKI	KLX 400 SR	400	2003			X
KAWASAKI	KX 500 E8-	500	1996			X
KAWASAKI	KLX 650 R D1	650	1996			X
SHERCO	SE 450 4.5I ENDURO	450	2004			X
SUZUKI	DR 125 SM	125	2008			X
SUZUKI	RM 125	125	2005			X
SUZUKI	RM 125 T-K	125	1996	2004		X
SUZUKI	RM 250	250	2005			X
SUZUKI	RM 250 T-K	250	1996	2004		X
SUZUKI	RMX 250 X-K1	250	1999			X
SUZUKI	DR-Z 400 S /E	400	2000			X
SUZUKI	DR-Z 400 SM	400	2005			X
TM	85	85	2001	2012		X
TM	125	125	2001	2004		X
TM	125 ENDURO	125	2001	2004		X

PASTIGLIE BRAKE PADS

APPLICAZIONI PER CODICE PASTIGLIA / applications for pads code

MESCOLA ORGANICA, SINTERIZZATA, E STMX organic, sintered and stmx compounds
OR / ST / STMX

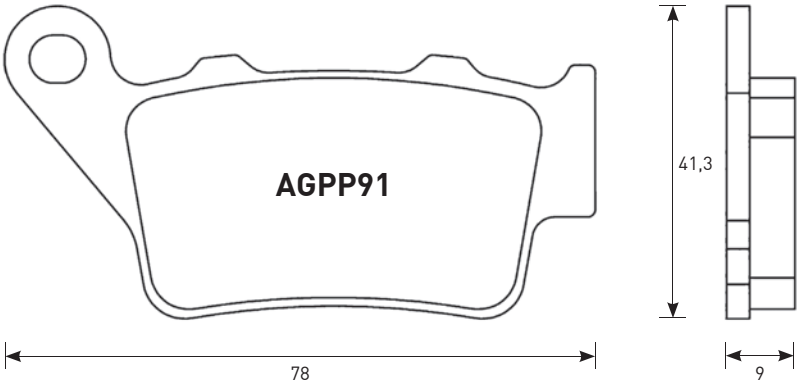

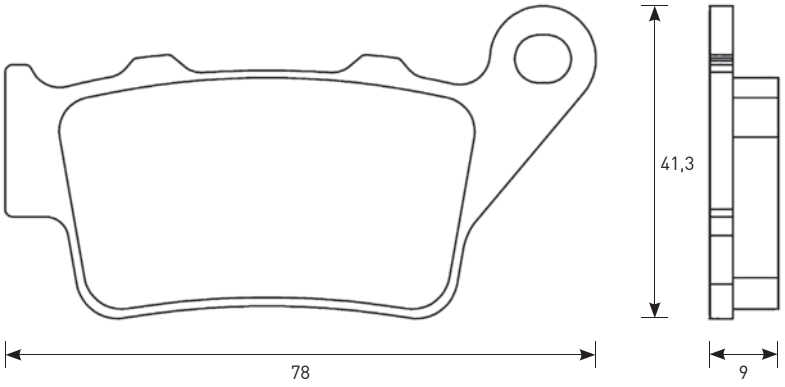

CROSS REFERENCE	
EBC	**FA208/FA213**
OGNIBENE	**275**
BRAKING	**773**
NEWFREN	**.FD.0206**
BREMBO	**07BB0210**
FERODO	**FDB2005**
CL	**2353**
SBS	**175/675**

EQUIVALENT OE #	
OEM Aprilia	**858200**
OEM Aprilia	**8113538**
OEM BMW	**34 21 7 664 983**
OEM BMW	**34 21 2 345 449**
OEM Ducati	**61340761A**
OEM Honda	**06435 MAK 003**
OEM KTM	**75013090000**
OEM KTM	**50313090000**
OEM KTM	**54613309300**
OEM KTM	**54613309200**
OEM KTM	**50313030100**

AGPP91						
MARCA Brand	**MODELLO** Model	**CC**	**DA** From	**A** To	**ANT.** Front	**POST.** Rear
ALFER	**VRE 125 4-STROKE**	**125**	**2000**			**X**
ALFER	**VR 250 CROSS**	**250**	**1999**			**X**
ALFER	**VR 250 ENDURO**	**250**	**1999**			**X**
ALFER	**VR 250 NO LIMIT**	**250**	**1999**			**X**
ALFER	**VR 250 SUPERMOTARD**	**250**	**1999**			**X**
APRILIA	**PEGASO 650 FACTORY**	**650**	**2007**			**X**
APRILIA	**PEGASO 650 I E**	**650**	**2001**			**X**
APRILIA	**PEGASO 650 TUSCANY TIBET RIDE**	**650**	**2004**			**X**
APRILIA	**PEGASO 650 STRADA**	**650**	**2005**			**X**
APRILIA	**650 PEGASO TRAIL**	**650**	**2006**			**X**
APRILIA	**750 DORSODURO FACTORY**	**750**	**2012**			**X**
APRILIA	**SL 750 SHIVER GT, ABS**	**750**	**2009**			**X**
APRILIA	**SL 750 SHIVER, ABS**	**750**	**2007**			**X**
APRILIA	**SMV 750 DORSODURO**	**750**	**2008**	**2009**		**X**
APRILIA	**NA 850 MANA**	**850**	**2007**			**X**
APRILIA	**1200 CAPONORD**	**1200**	**2013**			**X**

AGPP91						
MARCA Brand	**MODELLO** Model	**CC**	**DA** From	**A** To	**ANT.** Front	**POST.** Rear
APRILIA	**1200 CAPONORD RALLY**	**1200**	**2015**			**X**
APRILIA	**1200 DORSODURO, ABS**	**1200**	**2011**			**X**
BENELLI	**BX 449 CROSS**	**449**	**2007**			**X**
BENELLI	**BX 449 SUPERMOTARD**	**449**	**2008**			**X**
BENELLI	**BX 505 ENDURO**	**505**	**2008**			**X**
BETA	**JONATHAN 125**	**125**	**1999**			**X**
BETA	**EURO 350**	**350**	**1999**			**X**
BETA	**JONATHAN 350**	**350**	**2002**			**X**
BMW	**125 C1**	**125**	**2000**			**X**
BMW	**200 C1**	**200**	**2002**			**X**
BMW	**F 650 , ST**	**650**	**1994**	**2000**		**X**
BMW	**F 650 CS SCARVER**	**650**	**2002**	**2006**		**X**
BMW	**F 650 GS**	**650**	**2008**			**X**
BMW	**F 650 GS DAKAR**	**650**	**2001**	**2007**		**X**
BMW	**F 650 GS, RALLYE**	**650**	**2001**	**2007**		**X**
BMW	**G 650 GS**	**650**	**2009**			**X**
BMW	**G 650 GS SERTAO**	**650**	**2012**			**X**
BMW	**G 650 XCHALLENGE**	**650**	**2007**			**X**
BMW	**G 650 XCOUNTRY**	**650**	**2007**			**X**
BMW	**G 650 XMOTO**	**650**	**2007**			**X**
BMW	**F 700 GS**	**700**	**2013**			**X**
BMW	**F 800 GS**	**800**	**2008**			**X**
BMW	**F 800 GS**	**800**	**2013**			**X**
BMW	**F 800 GT**	**800**	**2013**			**X**
BMW	**F 800 R**	**800**	**2009**	**2015**		**X**
BMW	**F 800 S**	**800**	**2006**			**X**
BMW	**F 800 ST**	**800**	**2006**			**X**
BMW	**F 800 ST TOURING**	**800**	**2011**			**X**
BMW	**R 850 RT**	**850**	**1996**	**2001**		**X**
BMW	**S 1000 R**	**1000**	**2014**			**X**

ACCOSSATO

PASTIGLIE BRAKE PADS

APPLICAZIONI PER CODICE PASTIGLIA / applications for pads code

AGPP91						
MARCA Brand	MODELLO Model	CC	DA From	A To	ANT. Front	POST. Rear
BMW	S 1000 RR	1000	2009	2015		X
BMW	S 1000 RR HP4	1000	2013	2014		X
BORILE	B 500 CR, MT	500	2002			X
BREMBO RACING CALIPERS	MOTOCROSS CALIPER 22.2180.20					X
CCM	604 600 RS	600	2001			X
CCM	604E 600 SPORT	600	1999	2001		X
CCM	604E 600 SUPERMOTO	600	1999	2001		X
CCM	C25 600	600	1996	1998		X
CCM	644 DS	644	2002			X
CCM	644 R30	644	2002			X
CF MOTO	650 NK	650	2014			X
CF MOTO	650 TK	650	2014			X
DUCATI	800 SCRAMBLER CLASSIC	800	2015			X
DUCATI	800 SCRAMBLER ENDURO	800	2015			X
DUCATI	800 SCRAMBLER FULL THROTTLE	800	2015			X
DUCATI	800 SCRAMBLER ICON	800	2015			X
DUCATI	1000 BIPOSTO	1000	2007			X
DUCATI	1000 GT	1000	2005			X
DUCATI	1000 GT TOURING	1000	2009			X
DUCATI	1000 PAUL SMART	1000	2005			X
DUCATI	1000 SPORT	1000	2005			X
FACTORY	YR 250	250	1999			X
GASGAS	EC 125	125	1997	1999		X
GASGAS	EC 200	200	1999			X
GASGAS	EC 250	250	1997	1999		X
GASGAS	MC 250	250	1997	1999		X
GASGAS	EC 300	300	1999			X
HIGHLAND	450 MX	450	2006			X
HIGHLAND	950 V2 MOTARD	950	2000			X
HIGHLAND	950 V2 OUTBACK	950	1999			X
HONDA	CBR 250 R (BYBRE CAL)	250	2011			X
HONDA	CB 500	500	1997			X
HONDA	CB 500 S	500	1998			X
HONDA	NX 500 DOMINATOR	500	1997			X
HONDA	(AUSTRIA)					X
HONDA	NX 650 DOMINATOR	650	1997			X
HONDA	SLR 650	650	1997			X
HONDA	SX 650 VIGOR	650	1999	2002		X
HRD	50 GS ENDURO	50	2000	2002		X
HUSABERG	FC 400	400	1999	2002		X
HUSABERG	FE 400 ,S,E	400	1999	2003		X
HUSABERG	FS 400 E, C	400	2001	2003		X
HUSABERG	FC 450	450	2003			X
HUSABERG	FE 450 E	450	2004			X
HUSABERG	FS 450 C	450	2006			X
HUSABERG	FS 450 E, C	450	2003	2005		X
HUSABERG	FX 450 E	450	2003			X
HUSABERG	FC 470 , E	470	2001	2002		X
HUSABERG	FX 470 E	470	2001	2002		X
HUSABERG	FC 501	501	1999	2001		X
HUSABERG	FE 501 ,S,E	501	1999	2004		X
HUSABERG	FC 550	550	2001			X
HUSABERG	FE 550 E	550	2004			X
HUSABERG	FC 600	600	1999	2001		X
HUSABERG	FE 600 ,S,E	600	1999	2002		X
HUSABERG	FE 650 E	650	2001			X
HUSABERG	FS 650 E, C	650	2001			X
HUSABERG	FS 650 E, C	650	2006			X
HUSABERG	FX 650 E	650	2001			X

AGPP91						
MARCA Brand	MODELLO Model	CC	DA From	A To	ANT. Front	POST. Rear
HUSQVARNA	CR 125	125	1996	2004		X
HUSQVARNA	SM 125 S	125	2009	2013		X
HUSQVARNA	SM 125 S 4T	125	2011	2013		X
HUSQVARNA	SM 125 SUPERMOTARD, S	125	1999	2013		X
HUSQVARNA	TE 125 4T	125	2011	2013		X
HUSQVARNA	WR 125	125	1996	2013		X
HUSQVARNA	WRE 125	125	1996	2013		X
HUSQVARNA	CR 250	250	1996	2004		X
HUSQVARNA	TC 250	250	2002	2003		X
HUSQVARNA	TE 250	250	2002	2013		X
HUSQVARNA	WR 250	250	1996	2013		X
HUSQVARNA	TE 350	350	1996	2013		X
HUSQVARNA	WR 360	360	1998	2013		X
HUSQVARNA	SM 400 R	400	2002			X
HUSQVARNA	TE 400	400	2001	2013		X
HUSQVARNA	TE 410	410	1996	2013		X
HUSQVARNA	SM 450 R	450	2003	2005		X
HUSQVARNA	TC 450	450	2002	2003		X
HUSQVARNA	TE 450	450	2002	2010		X
HUSQVARNA	SM 510 R	510	2005			X
HUSQVARNA	TC 510	510	2002	2003		X
HUSQVARNA	TE 510	510	2002	2010		X
HUSQVARNA	TE 510 CENTENNIAL	510	2004	2005		X
HUSQVARNA	570 NOX	570	2001	2003		X
HUSQVARNA	SM 570 R	570	2001			X
HUSQVARNA	TC 570	570	2001	2013		X
HUSQVARNA	TE 570	570	2001	2013		X
HUSQVARNA	LT 610	610	2000			X
HUSQVARNA	SM 610 SUPER MOTARD, S	610	1998			X
HUSQVARNA	TC 610	610	1996	2013		X
HUSQVARNA	TE 610 RALLYE	610	1996	2013		X
HUSQVARNA	SMR 630	630	2004	2008		X
HUSQVARNA	TR 650 STRADA	650	2013			X
HUSQVARNA	TR 650 TERRA	650	2013			X
HUSQVARNA	SM 701	701	2015			X
HUSQVARNA	900 NUDA	900	2012			X
HUSQVARNA	900 NUDA R, ABS	900	2012			X
HYOSUNG	RX 450 SM	450	2008			X
KRAM-IT	250 SMR	250	2000			X
KRAM-IT	GS 250	250	1997			X
KRAM-IT	MX 250	250	1997			X
KRAM-IT	SM 250	250	1997			X
KTM	MOST MODELS		1994			X
KTM	125 DUKE	125	2011			X
KTM	125 STING	125	1999			X
KTM	125 SUPERMOTO	125	2000			X
KTM	EXC 125 ENDURO	125	1999	2003		X
KTM	EXE 125	125	2000			X
KTM	LC2 125	125	1999			X
KTM	RC 125	125	2014			X
KTM	SX 125	125	1996	1999		X
KTM	SX 125	125	2000	2003		X
KTM	200 Duke	200	2012			X
KTM	EXC 200 Enduro	200	1999	2003		X
KTM	RC 200	200	2014			X
KTM	EXC 250 Enduro	250	1999	2003		X
KTM	EXC 250 Enduro 4T	250	1999	2003		X
KTM	SX 250	250	1996	2002		X
KTM	EXC 300 Enduro	300	1999	2003		X
KTM	MX 360	360	1996	1997		X
KTM	SX 360	360	1996	1997		X

PASTIGLIE BRAKE PADS

APPLICAZIONI PER CODICE PASTIGLIA / applications for pads code

AGPP91						
MARCA Brand	**MODELLO** Model	**CC**	**DA** From	**A** To	**ANT.** Front	**POST.** Rear
KTM	XC 360	360	1996	1997		X
KTM	EXC 380 Enduro	380	1999			X
KTM	MX 380	380	1998			X
KTM	SX 380	380	1998	2002		X
KTM	XC 380	380	1998			X
KTM	390 Duke	390	2013			X
KTM	RC 390	390	2014			X
KTM	EXC 400 Racing	400	2000	2003		X
KTM	LC4-E 400 Enduro	4400	1999			X
KTM	SC 400	400	1999			X
KTM	SX 400 Racing	400	2000	2002		X
KTM	SXC 400 Tiainen Replica	400	1999	2000		X
KTM	450 Rally	450	2011			X
KTM	EXC 520 Racing	520	2000	2002		X
KTM	SX-F 520 Racing	520	2000	2002		X
KTM	EXC 525 Racing	525	2003			X
KTM	SX-F 525 Racing	525	2003			X
KTM	SXC 540 Tiainen Replica	540	1999	2000		X
KTM	LC4 620 Competition	620	1999			X
KTM	LC4 620 Competition SuperMoto	620	2000			X
KTM	LC4 620 RXC	620	1995			X
KTM	LC4 620 Supercompetition	620	2001			X
KTM	SC 620	620	1999			X
KTM	SX 620	620	1995	1999		X
KTM	LC4 625 SC Supermoto	625	2002	2004		X
KTM	SMC 625	625	2005			X
KTM	SXC 625	625	2003	2004		X
KTM	640 Duke	640	2003	2006		X

AGPP91						
MARCA Brand	**MODELLO** Model	**CC**	**DA** From	**A** To	**ANT.** Front	**POST.** Rear
KTM	LC4 640 Adventure	640	1999	2004		X
KTM	LC4 640 Adventure	640	2005			X
KTM	LC4 640 Supermoto	640	2003			X
KTM	LC4 640 Supermoto	640	2004			X
KTM	LC4-E 640 Enduro	640	1999			X
KTM	LC4-E 640 Supermoto	640	1999	2002		X
KTM	LC4 660 Rallye	660	2001	2003		X
KTM	LC4 660 SM Factory Replica	660	2002			X
KTM	SMC 660 Supermoto	660	2003			X
KTM	SMC 660 Supermoto	660	2004	2007		X
KTM	690 Duke	690	2008	2011		X
KTM	690 Duke ABS	690	2012			X
KTM	690 Duke R	690	2010	2011		X
KTM	690 Duke R	690	2014			X
KTM	690 Enduro	690	2008			X
KTM	690 Enduro R	690	2009			X
KTM	690 SM	690	2007			X
KTM	690 SMC	690	2008			X
KTM	690 Supermoto R	690	2008			X
KTM	LC8 950 Adventure	950	2002			X
KTM	990 Super Duke	990	2004	2013		X
KTM	990 Super Duke R	990	2009	2013		X
MAICO	250 Motocross/Enduro	250	1999			X
MAICO	500 Motocross/Enduro	500	1999			X
MAICO	500 Supermotard	500	1999			X
PRAGA	ED 250	250	1999			X
PRAGA	CD 610	610	1999			X
ROYAL ENFIELD	535 Continental GT	535	2014			X

MESCOLA ORGANICA, SINTERIZZATA, ZXC, EV1 E EV2 organic, sintered, zxc, ev1 and ev2 compounds
OR / ST / ZXC / EV1 / EV2

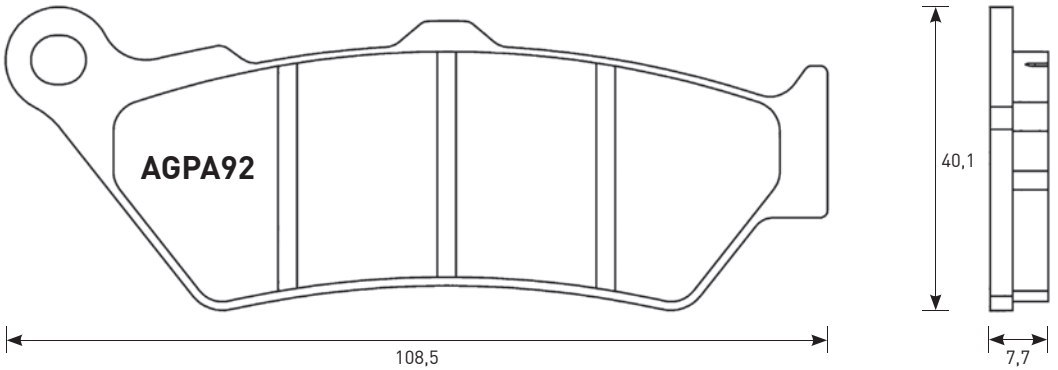

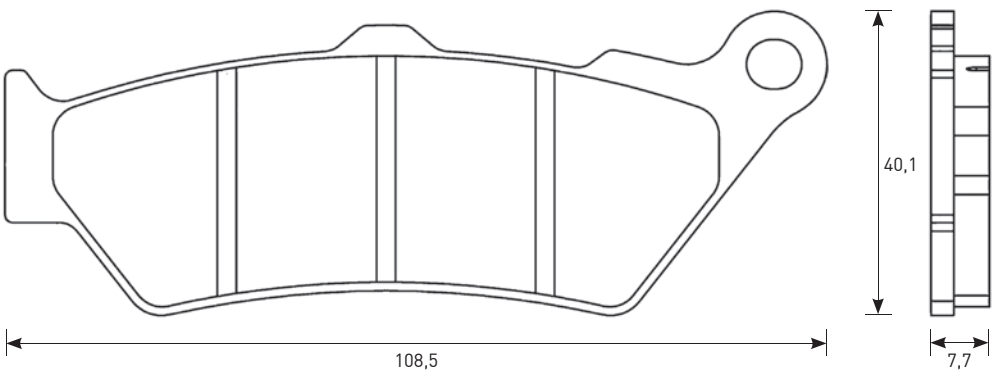

ACCOSSATO

PASTIGLIE BRAKE PADS

APPLICAZIONI PER CODICE PASTIGLIA / applications for pads code

CROSS REFERENCE	
EBC	FA209
OGNIBENE	256
BRAKING	780
NEWFREN	.FD.0216
BREMBO	07BB0311
FERODO	FDB2006
CL	2396
SBS	674/176

EQUIVALENT OE #	
OEM Aprilia	8113627
OEM Aprilia	811 3533
OEM Aprilia	8113489
OEM Aprilia	8113988
OEM Aprilia	8113627
OEM BMW	34 11 7 697 086
OEM BMW	341 12345 445
OEM BMW	34 11 7 651 958
OEM BMW	34 11 7 696 593
OEM BMW	34 11 7 705 216
OEM BMW	34 21 7 724 609
OEM BMW	34 21 8 534 821
OEM Ducati	61340751A
OEM Ducati	61370721A
OEM Honda	06455 MAK 000
OEM Honda	06455 MAK 003
OEM Honda	06455 MY5 731
OEM KTM	60013030000
OEM Moto Guzzi	30654626
OEM Moto Guzzi	3654600
OEM Triumph	T2020691

AGPA92						
MARCA Brand	MODELLO Model	CC	DA From	A To	ANT. Front	POST. Rear
APRILIA	650 MOTO	650	1995		X	
APRILIA	650 PEGASO	650	1995		X	
APRILIA	650 PEGASO I.E.	650	2001		X	
APRILIA	650 PEGASO I.E. TUSCANY TIBET RAID	650	2004		X	
APRILIA	650 PEGASO TRAIL	650	2006		X	
APRILIA	650 STARCK	650	1996		X	
APRILIA	ETV 1000 CAPONORD	1000	2001		X	
APRILIA	ETV 1000 CAPONORD RALLY RAID	1000	2004		X	
BIMOTA	DBX 1100	1100	2013		X	
BMW	125 C1	125	2000		X	
BMW	200 C1	200	2002		X	
BMW	F 650 , ST	650	1994	2000	X	
BMW	F 650 CS SCARVER	650	2002	2006	X	
BMW	F 650 GS	650	2008		X	
BMW	F 650 GS DAKAR	650	2001	2007	X	
BMW	F 650 GS, RALLYE	650	2001	2007	X	
BMW	G 650 GS	650	2009		X	
BMW	G 650 GS SERTAO	650	2012		X	
BMW	G 650 XCHALLENGE	650	2007		X	
BMW	G 650 XCOUNTRY	650	2007		X	
BMW	F 700 GS	700	2013		X	
BMW	F 800 GS	800	2008		X	
BMW	F 800 GS	800	2013		X	
BMW	1200 HP2 ENDURO	1200	2006		X	
BMW	R 1200 GS	1200	2013	2014		X
BMW	R 1200 GS ADVENTURE	1200	2014			X
BMW	R 1200 R	1200	2015			X
BMW	R 1200 RS	1200	2015			X
BMW	R 1200 RT	1200	2014			X
BMW	K 1600 GT	1600	2011			X
BMW	K 1600 GTL	1600	2011			X
CF MOTO	650 NK	650	2014		X	
CF MOTO	650 TK	650	2014		X	
DUCATI	1000 BIPOSTO	1000	2007		X	
DUCATI	1000 GT	1000	2005		X	
DUCATI	1000 GT TOURING	1000	2009		X	

AGPA92						
MARCA Brand	MODELLO Model	CC	DA From	A To	ANT. Front	POST. Rear
DUCATI	1000 PAUL SMART	1000	2005		X	
DUCATI	1000 SPORT	1000	2005		X	
DUCATI	1200 DIAVEL	1200	2011			X
DUCATI	1200 DIAVEL STRADA	1200	2011			X
HONDA	CBR 250 R (BYBRE CAL)	250	2011		X	
HONDA	CB 500	500	1997		X	
HONDA	CB 500 S	500	1998		X	
HONDA	NT 650 V DEAUVILLE	650	1998	2001	X	
HONDA	SLR 650	650	1997		X	
HONDA	SX 650 VIGOR	650	1999	2002	X	
HUSQVARNA	TR 650 STRADA	650	2013		X	
HUSQVARNA	TR 650 TERRA	650	2013		X	
KTM	450 RALLY	450	2011		X	
KTM	LC4 640 ADVENTURE	640	2005		X	
KTM	690 ENDURO	690	2008		X	
KTM	690 ENDURO R	690	2009		X	
KTM	950 R SUPERENDURO	950	2006		X	
KTM	LC8 950 ADVENTURE	950	2002		X	
KTM	990 ADVENTURE R	990	2010		X	
KTM	990 ADVENTURE, ADVENTURE S, ABS	990	2006		X	
MOTO GUZZI	940 CUSTOM	940	2007			X
MOTO GUZZI	1100 CALIFORNIA EV	1100	2006			X
MOTO GUZZI	1100 CALIFORNIA EV TOURING	1100	2006			X
MOTO GUZZI	1100 CALIFORNIA JACKAL	1100	2000	2001		X
MOTO GUZZI	1100 CALIFORNIA JACKAL BASIC	1100	2000	2001		X
MOTO GUZZI	1100 CALIFORNIA SPECIAL	1100	1999	2001		X
MOTO GUZZI	1100 CALIFORNIA SPECIAL SPORT ALLOY	1100	2002			X
MOTO GUZZI	1100 CALIFORNIA STONE METAL	1100	2002			X
MOTO GUZZI	1100 CALIFORNIA STONE, STONE TOURING	1100	2002			X
MOTO GUZZI	1100 CALIFORNIA TITANIUM	1100	2003			X
MOTO GUZZI	1100 CALIFORNIA VINTAGE	1100	2006			X
MOTO GUZZI	1100 GRISO	1100	2005			X
MOTO GUZZI	ES 1100 QUOTA	1100	1999		X	
MOTO GUZZI	1400 CALIFORNIA CUSTOM	1400	2013			X
MOTO GUZZI	1400 CALIFORNIA TOURING	1400	2013			X
MOTO MORINI	1200 GRANPASSO	1200	2008		X	
MOTO MORINI	1200 GT	1200	2010		X	
MOTO MORINI	1200 SCRAMBLER	1200	2009		X	
ROYAL ENFIELD	535 CONTINENTAL GT	535	2014		X	
TRIUMPH	1600 THUNDERBIRD	1600	2009			X
TRIUMPH	1700 THUNDERBIRD COMMANDER	1700	2014			X
TRIUMPH	1700 THUNDERBIRD LT	1700	2014			X
TRIUMPH	1700 THUNDERBIRD STORM	1700	2011			X
TRIUMPH	2300 ROCKET III	2300	2004			X
TRIUMPH	2300 ROCKET III CLASSIC	2300	2007			X
TRIUMPH	2300 ROCKET III ROADSTER	2300	2010			X
TRIUMPH	2300 ROCKET III TOURING	2300	2013			X
TRIUMPH	2300 ROCKET X	2300	2015			X
VICTORY	1500 KINGPIN	1500	2004	2005		X
VICTORY	1500 TOURING CRUISER	1500	2003	2006		X
VICTORY	1500 V92C CRUISER	1500	1998	2002		X
VICTORY	1500 V92C DELUXE	1500	2001	2002		X
VICTORY	1500 V92SC SPORT CRUISER	1500	2000	2002		X

PASTIGLIE BRAKE PADS

APPLICAZIONI PER CODICE PASTIGLIA / applications for pads code

AGPA92						
MARCA Brand	**MODELLO** Model	**CC**	**DA** From	**A** To	**ANT.** Front	**POST.** Rear
VICTORY	1500 VEGAS	1500	2003	2005		X
VICTORY	1500 VEGAS 8-BALL	1500	2005			X
VICTORY	1634 HAMMER	1634	2005	2007		X
VICTORY	1634 HAMMER S	1634	2006	2008		X
VICTORY	1634 KINGPIN	1634	2006	2007		X
VICTORY	1634 KINGPIN TOUR	1634	2006	2007		X
VICTORY	1634 VEGAS	1634	2006	2007		X
VICTORY	1634 VEGAS 8-BALL	1634	2006	2007		X

AGPA92						
MARCA Brand	**MODELLO** Model	**CC**	**DA** From	**A** To	**ANT.** Front	**POST.** Rear
VICTORY	1634 VEGAS JACKPOT	1634	2006	2007		X
YAMAHA	DT 125 X SUPERMOTARD	125	2005		X	
YAMAHA	XT 660 R	660	2004		X	
ZERO	DS ZF12.5		2015		X	
ZERO	DS ZF9.4		2015		X	
ZERO	S ZF12.5		2015		X	
ZERO	S ZF9.4		2015		X	
ZERO	SR ZF12.5		2015		X	

MESCOLA ORGANICA E SINTERIZZATA organic and sintered compound
OR / ST

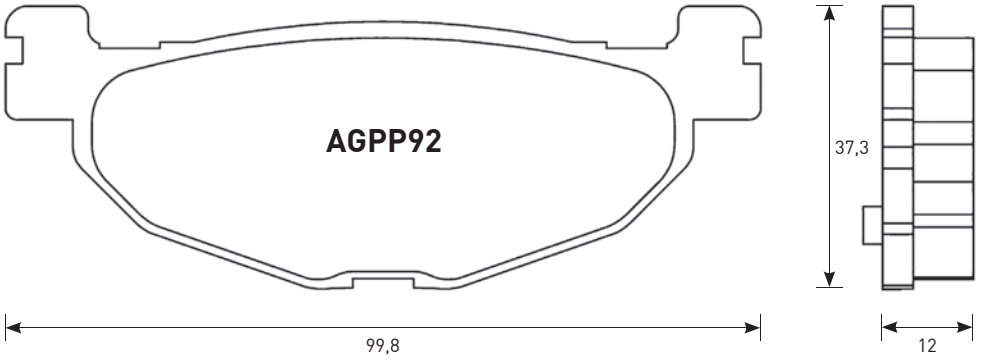

CROSS REFERENCE	
EBC	FA408
OGNIBENE	338
BRAKING	904
NEWFREN	.FD.0378
BREMBO	7059
FERODO	FDB2200
CL	3075
SBS	185

EQUIVALENT OE #	
OEM Yamaha	5RU W0046 00
OEM Yamaha	5GM W0046 00
OEM Yamaha	5VU W0046 00
OEM Yamaha	5NR F5811 10
OEM Yamaha	5VU W0046 01
OEM Yamaha	5RU 25806 00

AGPP92						
MARCA Brand	**MODELLO** Model	**CC**	**DA** From	**A** To	**ANT.** Front	**POST.** Rear
YAMAHA	YP 400 MAJESTY	400	2004	2005		X
YAMAHA	XP 500 TMAX	500	2004	2005		X
YAMAHA	XP 500 TMAX	500	2008	2011		X
YAMAHA	XP 500 TMAX TECH MAX	500	2011			X

ACCOSSATO

PASTIGLIE BRAKE PADS

APPLICAZIONI PER CODICE PASTIGLIA / applications for pads code

MESCOLA ORGANICA, SINTERIZZATA, ZXC, EV1 E EV2 organic, sintered, zxc, ev1 and ev2 compounds
OR / ST / ZXC / EV1 / EV2

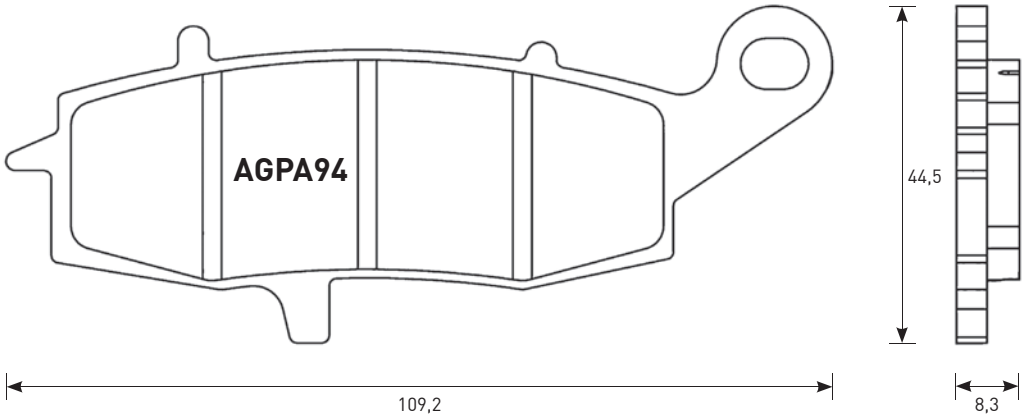

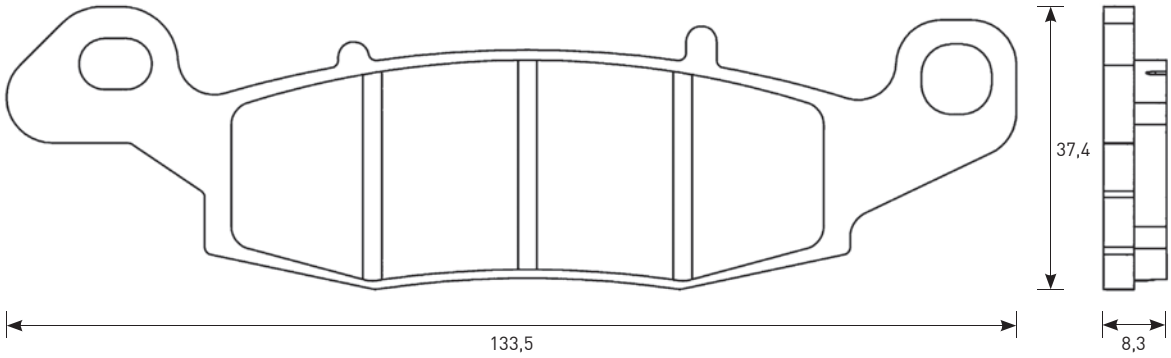

CROSS REFERENCE	
EBC	FA231/FA259
OGNIBENE	257
BRAKING	787
NEWFREN	.FD.0227
BREMBO	07KA1807
FERODO	FDB2049
CL	2384
SBS	704

EQUIVALENT OE #	
OEM Kawasaki	43082 1264
OEM Kawasaki	43082 10
OEM Kawasaki	43082 105
OEM Kawasaki	43082 1260
OEM Kawasaki	43082 1232
OEM Kawasaki	43082 1235
OEM Kawasaki	43082 1248
OEM Kawasaki	43082 1237
OEM Kawasaki	43082 1178
OEM Kawasaki	43082 1226
OEM Kawasaki	43082 62
OEM Kawasaki	43082 52
OEM Suzuki	59100 33870
OEM Suzuki	59100 33850
OEM Suzuki	59101 33880
OEM Suzuki	59101 33830
OEM Suzuki	59100 33880
OEM Suzuki	59102 33810
OEM Suzuki	59102 33860
OEM Suzuki	59101 33820
OEM Suzuki	69100 1870

AGPA94						
MARCA Brand	MODELLO Model	CC	DA From	A To	ANT. Front	POST. Rear
KAWASAKI	400 NINJA R RIGHT	400	2011		X	
KAWASAKI	ER-6F 650 RIGHT	650	2006	2012	X	
KAWASAKI	ER-6N 650 RIGHT	650	2006	2012	X	
KAWASAKI	KLE 650 VERSYS RIGHT	650	2007	2014	X	
KAWASAKI	W 650	650	1999		X	
KAWASAKI	Z 750 RIGHT	750	2004	2006	X	

AGPA94						
MARCA Brand	MODELLO Model	CC	DA From	A To	ANT. Front	POST. Rear
KAWASAKI	Z 750 S RIGHT	750	2005	2006	X	
KAWASAKI	ZR 750 ZEPHYR RIGHT	750	1996		X	
KAWASAKI	ZR-7 750 LEFT/REAR	750	1999			X
KAWASAKI	ZR-7 750 RIGHT	750	1999		X	
KAWASAKI	ZR-7S 750 LEFT/REAR	750	2001			X
KAWASAKI	ZR-7S 750 RIGHT	750	2001		X	
KAWASAKI	VN 800 DRIFTER	800	1999	2002		X
KAWASAKI	W 800	800	2011		X	
KAWASAKI	KLV 1000 RIGHT	1000	2004		X	
KAWASAKI	1100 ZEPHYR RIGHT	1100	1997		X	
KAWASAKI	GPZ 1100 (ZX 1100 E1-E2) RIGHT	1100	1995	1996	X	
KAWASAKI	GPZ 1100 ABS, HORIZONT RIGHT	1100	1997		X	
KAWASAKI	VN 1500 CLASSIC TOURER FI RIGHT	1500	2000		X	
KAWASAKI	VN 1500 CLASSIC TOURER RIGHT	1500	1998		X	
KAWASAKI	VN 1500 DRIFTER	1500	1999	2002		X
KAWASAKI	VN 1600 CLASSIC RIGHT	1600	2003		X	
KAWASAKI	VN 1700 CLASSIC RIGHT	1700	2009		X	
KAWASAKI	VN 1700 CLASSIC	1700	2009		X	
KAWASAKI	TOURER RIGHT		2009		X	
SUZUKI	RV 125 VANVAN	125	2003		X	
SUZUKI	GS 500	500	2004		X	
SUZUKI	GS 500 E	500	1996	2003	X	
SUZUKI	GS 500 F	500	2004		X	
SUZUKI	GSF 600 BANDIT / S BANDIT RIGHT	600	2000	2004	X	

PASTIGLIE BRAKE PADS

APPLICAZIONI PER CODICE PASTIGLIA / applications for pads code

AGPA94						
MARCA Brand	**MODELLO** Model	**CC**	**DA** From	**A** To	**ANT.** Front	**POST.** Rear
SUZUKI	GSX 600 FW RIGHT	600	1998		X	
SUZUKI	DL 650 V-STROM RIGHT	650	2004		X	
SUZUKI	DL 650 V-STROM XT RIGHT	650	2015		X	
SUZUKI	GSF 650 BANDIT / S BANDIT RIGHT	650	2005		X	
SUZUKI	GSF 650 BANDIT / S	650	2009		X	
SUZUKI	BANDIT RIGHT ABS		2006		X	
SUZUKI	SFV 650 GLADIUS RIGHT	650	2009		X	
SUZUKI	SV 650 ,S RIGHT	650	1999	2003	X	
SUZUKI	XF 650 FREEWIND	650	1997	2002	X	
SUZUKI	GSR 750 RIGHT	750	2011		X	
SUZUKI	GSX 750 FW RIGHT	750	1998	2002	X	

AGPA94						
MARCA Brand	**MODELLO** Model	**CC**	**DA** From	**A** To	**ANT.** Front	**POST.** Rear
SUZUKI	GSX 750 RIGHT	750	1998	2008	X	
SUZUKI	C 800 INTRUDER	800	2005		X	
SUZUKI	M 800 INTRUDER	800	2005		X	
SUZUKI	VL 800 INTRUDER LC VOLUSIA	800	2001	2004	X	
SUZUKI	VZ 800 MARAUDER	800	1997	2004	X	
SUZUKI	DL 1000 V-STROM RIGHT	1000	2002	2013	X	
SUZUKI	GSX 1100 G RIGHT	1100	1996		X	
SUZUKI	C 1500 INTRUDER RIGHT	1500	2005		X	
SUZUKI	M 1500 INTRUDER RIGHT	1500	2009		X	
SUZUKI	VL 1500 INTRUDER LC RIGHT	1500	2002		X	

MESCOLA ORGANICA, SINTERIZZATA, ZXC, EV1 E EV2 organic, sintered, zxc, ev1 and ev2 compounds
OR / ST / ZXC / EV1 / EV2

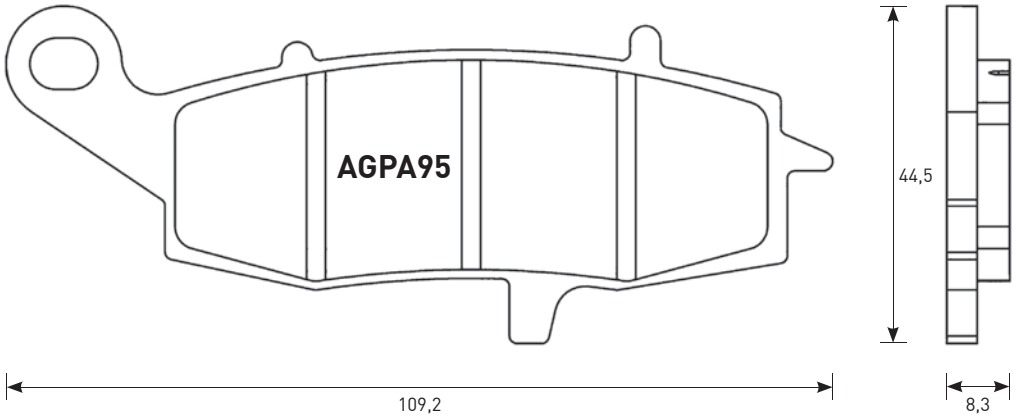

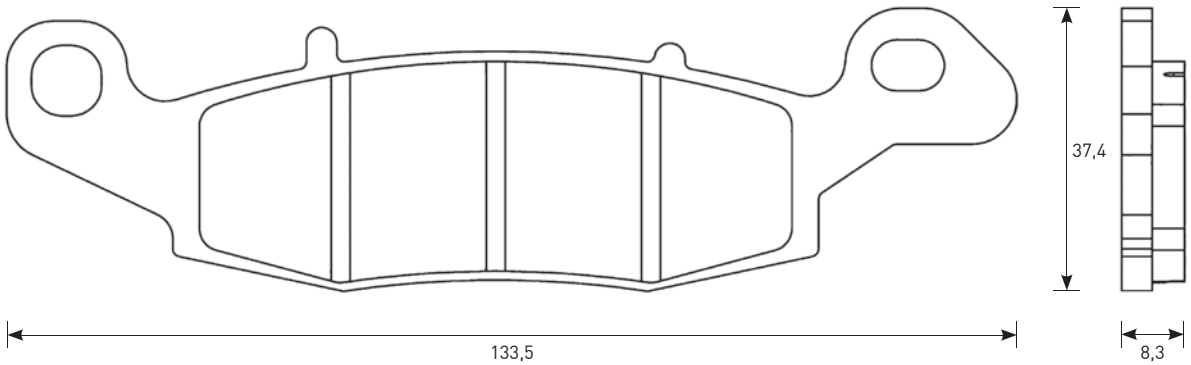

CROSS REFERENCE	
EBC	FA229/FA237
OGNIBENE	260
BRAKING	782
NEWFREN	.FD.0228
BREMBO	07KA1907
FERODO	FDB2048
CL	2383
SBS	705

EQUIVALENT OE #	
OEM Kawasaki	43082 0050
OEM Kawasaki	43082 0051
OEM Kawasaki	43082 1234
OEM Kawasaki	43082 0009
OEM Kawasaki	43082 1223
OEM Kawasaki	43082 0061
OEM Kawasaki	43082 1187
OEM Kawasaki	43082 1177
OEM Suzuki	59302 33810
OEM Suzuki	59301 33820
OEM Suzuki	59301 33830
OEM Suzuki	59302 33830
OEM Suzuki	59302 33880
OEM Suzuki	59302 33890

AGPA95						
MARCA Brand	**MODELLO** Model	**CC**	**DA** From	**A** To	**ANT.** Front	**POST.** Rear
KAWASAKI	400 NINJA R LEFT/REAR	400	2011		X	
KAWASAKI	ER-5 500	500	2001		X	
KAWASAKI	ER-6F 650 LEFT/REAR	650	2006	2012	X	
KAWASAKI	ER-6N 650 LEFT/REAR	650	2006	2012	X	
KAWASAKI	KLE 650 VERSYS LEFT/REAR	650	2007	2014	X	
KAWASAKI	KLR 650 C1-C4	650	1995	1998	X	
KAWASAKI	KLR 650 C5-C10	650	1999	2004	X	
KAWASAKI	Z 750 LEFT/REAR	750	2004	2006	X	
KAWASAKI	Z 750 S LEFT/REAR	750	2005	2006	X	
KAWASAKI	ZR 750 ZEPHYR LEFT/REAR	750	1996		X	
KAWASAKI	ZR-7 750 LEFT/REAR	750	1999		X	
KAWASAKI	ZR-7S 750 LEFT/REAR	750	2001		X	

ACCOSSATO

PASTIGLIE BRAKE PADS

APPLICAZIONI PER CODICE PASTIGLIA / applications for pads code

AGPA95						
MARCA Brand	MODELLO Model	CC	DA From	A To	ANT. Front	POST. Rear
KAWASAKI	VN 800 CLASSIC	800	1998		X	
KAWASAKI	VN 800 DRIFTER	800	1999	2002	X	
KAWASAKI	VN 900 CLASSIC	900	2006		X	
KAWASAKI	VN 900 CUSTOM	900	2007		X	
KAWASAKI	KLV 1000 LEFT/REAR	1000	2004		X	
KAWASAKI	1100 ZEPHYR LEFT/REAR	1100	1997		X	
KAWASAKI	GPZ 1100 (ZX 1100 E1-E2) LEFT/REAR	1100	1995	1996	X	
KAWASAKI	GPZ 1100 ABS, LEFT/REAR HORIZONT	1100	1997		X	
KAWASAKI	VN 1500 CLASSIC	1500	1997		X	
KAWASAKI	VN 1500 CLASSIC FI	1500	2000		X	
KAWASAKI	VN 1500 CLASSIC TOURER FI LEFT/REAR	1500	2000		X	
KAWASAKI	VN 1500 CLASSIC TOURER LEFT/REAR	1500	1998		X	
KAWASAKI	VN 1500 DRIFTER	1500	1999	2002	X	
KAWASAKI	VN 1600 CLASSIC LEFT/REAR	1600	2003		X	
KAWASAKI	VN 1700 CLASSIC LEFT/REAR	1700	2009		X	
KAWASAKI	VN 1700 CLASSIC TOURER LEFT/REAR	1700	2009		X	
SUZUKI	GSF 250 VS, S BANDIT	250	1995		X	

AGPA95						
MARCA Brand	MODELLO Model	CC	DA From	A To	ANT. Front	POST. Rear
SUZUKI	GSF 400 BANDIT	400	1994	1997	X	
SUZUKI	GSF 600 BANDIT / S BANDIT LEFT/REAR	600	2000	2004	X	
SUZUKI	GSX 600 FW LEFT/REAR	600	1998		X	
SUZUKI	DL 650 V-STROM LEFT/REAR	650	2004		X	
SUZUKI	DL 650 V-STROM XT LEFT/REAR	650	2015		X	
SUZUKI	GSF 650 BANDIT / S BANDIT LEFT/REAR	650	2005	2006	X	
SUZUKI	SFV 650 GLADIUS LEFT/REAR	650	2009		X	
SUZUKI	SV 650 ,S LEFT/REAR	650	1999	2003	X	
SUZUKI	GSR 750 LEFT/REAR	750	2011		X	
SUZUKI	GSX 750 FW LEFT/REAR	750	1998	2002	X	
SUZUKI	GSX 750 LEFT/REAR 9	750	1998	2008	X	
SUZUKI	DR 800 ST BIG	800	1996		X	
SUZUKI	DL 1000 V-STROM LEFT/REAR	1000	2002	2013	X	
SUZUKI	GSX 1100 G LEFT/REAR	1100	1996		X	
SUZUKI	C 1500 INTRUDER LEFT/REAR	1500	2005		X	
SUZUKI	M 1500 INTRUDER LEFT/REAR	1500	2009		X	
SUZUKI	VL 1500 INTRUDER LC LEFT/REAR	1500	2002		X	

MESCOLA ORGANICA E SINTERIZZATA organic and sintered compound
OR / ST

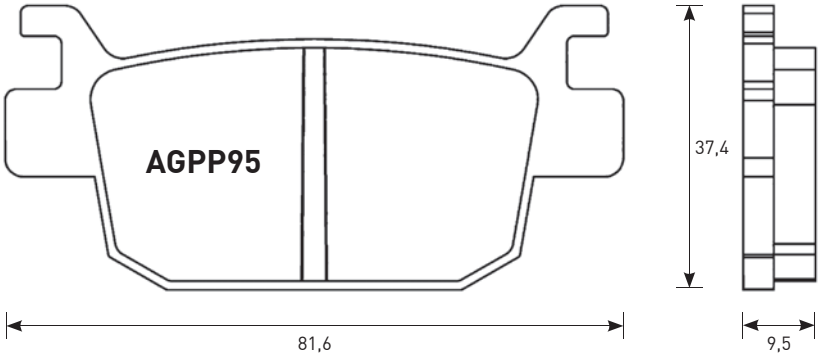

CROSS REFERENCE	
EBC	FA415
OGNIBENE	334
BRAKING	908
NEWFREN	.FD.0401
BREMBO	7064
FERODO	FDB2149
SBS	832

EQUIVALENT OE #	
OEM Kawasaki	43082 0078
OEM Suzuki	59100 09860
OEM Suzuki	59100 31850

AGPP95						
MARCA Brand	MODELLO Model	CC	DA From	A To	ANT. Front	POST. Rear
HONDA	FES 125 A7/A9/AA S-WING	125	2007	2015		X
HONDA	FES 125 7/9/A S-WING	125	2007	2013		X
HONDA	SH 125i 9/A/B FUEL INJECTION	125	2009	2012		X
HONDA	SH 125i RA FUEL INJECTION (REAR DISC MODEL)	125	2010	2014		X
HONDA	SH 125i (2 PISTON CALIPER)	125	2014	2015		X
HONDA	FES 150 A7/A9/AA S-WING	150	2007	2013		X
HONDA	FES 7/9/A S-WING		2007	2013		X
HONDA	SH 150i 9/A/B FUEL INJECTION	150	2009	2012		X

AGPP95						
MARCA Brand	MODELLO Model	CC	DA From	A To	ANT. Front	POST. Rear
HONDA	SH 150i RA FUEL INJECTION (REAR DISC MODEL)	150	2010	2014		X
HONDA	SH 150i (2 PISTON CALIPER)	150	2014	2015		X
HONDA	NSS 250 EX5/EX7/EX8 FORZA EX	250	2005	2008		X
HONDA	NSS 250 AX5/AX6 (ABS) FORZA Z	250	2005	2006		X
HONDA	NSS 250 X5/X7/X8 FORZA	250	2005	2008		X
HONDA	NSS 300 AD FORZA	300	2013	2015		X
HONDA	NSS 300 D FORZA (NON ABS)	300	2015			X
HONDA	SH 300 I 7/8/9/A/B (NON ABS)	300	2007	2012		X
HONDA	SH 300 I A7/A8/A9/AA/AB/AC (ABS)	300	2007	2013		X
HONDA	SH 300 I R8/R9/RA (NON ABS)	300	2008	2010		X
HONDA	SH 300 I AR8/AR9/ARA (ABS)	300	2008	2010		X
HONDA	SH 300 I ABS	300	2014			X

PASTIGLIE BRAKE PADS

APPLICAZIONI PER CODICE PASTIGLIA / applications for pads code

MESCOLA ORGANICA, SINTERIZZATA, ZXC, EV1 E EV2 organic, sintered, zxc, ev1 and ev2 compounds
OR / ST / ZXC / EV1 / EV2

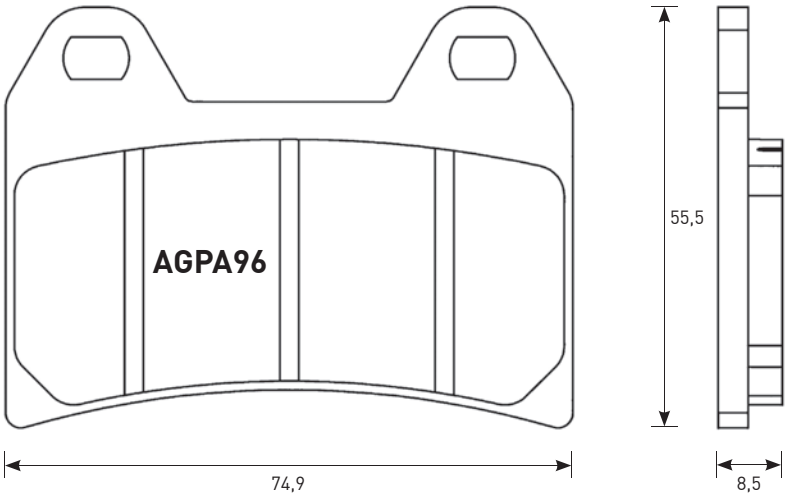

CROSS REFERENCE	
EBC	FA244
OGNIBENE	270
BRAKING	784
NEWFREN	.FD.0221
BREMBO	07BB1910
FERODO	FDB2042
CL	2539
SBS	706

EQUIVALENT OE #	
OEM Aprilia	8113720
OEM Aprilia	8113754
OEM Aprilia	8133614
OEM Benelli	R300000126000
OEM Cagiva	8000 B1593
OEM Cagiva	8000 95542
OEM Ducati	61340611A
OEM Ducati	61340201A
OEM Ducati	61340411A
OEM Ducati	613400201A
OEM Ducati	61340211B
OEM KTM	58713030000
OEM KTM	58413130000
OEM Moto Guzzi	1654630
OEM Moto Guzzi	16546300
OEM Moto Guzzi	326546100
OEM Moto Guzzi	1654630
OEM Suzuki	59100 03860
OEM Yamaha	1D2 W0045 00

AGPA96

MARCA Brand	MODELLO Model	CC	DA From	A To	ANT. Front	POST. Rear
APRILIA	RS 250	250	1997	2002	X	
APRILIA	RS 250 PISTA	250	2004		X	
APRILIA	650 PEGASO STRADA	650	2005		X	
APRILIA	750 DORSODURO FACTORY	750	2012		X	
APRILIA	SMV 750 DORSODURO	750	2008		X	
APRILIA	1000 BLUE MARLIN	1000	2002		X	
APRILIA	RST 1000 FUTURA	1000	2001		X	
APRILIA	RSV 1000 FALCO SL, R	1000	2000		X	
APRILIA	RSV 1000 MILLE	1000	1997	2001	X	
APRILIA	RSV 1000 MILLE R	1000	2000		X	
APRILIA	RSV 1000 MILLE SP	1000	2000		X	
APRILIA	RSV 1000 TUONO FIGHTER	1000	2003	2005	X	
APRILIA	RSV 1000 TUONO R (RAD.CAL), ABS	1000	2004		X	
APRILIA	RSV 1000 TUONO V4 R	1000	2011	2013	X	
APRILIA	1200 DORSODURO, ABS	1200	2011		X	
BENELLI	666 125 BORN IN HELL	125	1998		X	
BENELLI	BN 302	302	2014		X	
BENELLI	BN 600	600	2013		X	
BENELLI	756 CUE	756	2010		X	
BENELLI	899 TREK	899	2007		X	

AGPA96

MARCA Brand	MODELLO Model	CC	DA From	A To	ANT. Front	POST. Rear
BENELLI	TNT 899	899	2007		X	
BENELLI	900 TORNADO 3	900	2000	2002	X	
BENELLI	TNT 1100	1100	2004		X	
BENELLI	TNT 1130	1130	2005		X	
BENELLI	TNT 1130 TREK	1130	2006		X	
BRAKING	STREET, SUPERMOTARD					
BREMBO RACING CALIPERS	100 MM MOTARD RADIAL XA78910, P4 30/34					
BREMBO RACING CALIPERS	100 MM RADIAL 220A16810, P4 30/34					
BREMBO RACING CALIPERS	100 MM RADIAL 220A80310, P4 30/34					
BREMBO RACING CALIPERS	108 MM MOTARD RADIAL XA69510, P4 30/34					
BREMBO RACING CALIPERS	108 MM RADIAL 220A01610, P4 30/34					
BREMBO RACING CALIPERS	108 MM RADIAL 220A80210, P4 30/34					
BREMBO RACING CALIPERS	GOLDLINE TWO PIN 20.6800, ROAD					
BREMBO RACING CALIPERS	RADIAL 220A16820, P4 30/34					
CAGIVA	650 RAPTOR	650	2001		X	
CAGIVA	650 V-RAPTOR	650	2001		X	
CAGIVA	1000 RAPTOR	1000	2000		X	
CAGIVA	1000 V-RAPTOR	1000	2000		X	
CAGIVA	1000 XTRA RAPTOR	1000	2002		X	
DUCATI	400 MONSTER (JAPAN)	400	2001		X	
DUCATI	600 MONSTER	600	2000	2001	X	
DUCATI	620 MONSTER DARK I.E.	620	2002	2006	X	
DUCATI	620 MONSTER I.E., S I.E.	620	2002	2006	X	
DUCATI	620 MULTISTRADA DARK	620	2005		X	
DUCATI	620 SPORT	620	2003		X	
DUCATI	696 MONSTER (RAD.CAL)	696	2008	2012	X	
DUCATI	748 , S	748	1999	2002	X	
DUCATI	748 R	748	2000		X	
DUCATI	748 SPS	748	1998	1999	X	
DUCATI	750 MONSTER	750	2000	2001	X	
DUCATI	750 MONSTER I.E.	750	2002		X	
DUCATI	750 SPORT 00- HS	750	2000		X	
DUCATI	750 SUPER SPORT	750	2000		X	

ACCOSSATO

PASTIGLIE BRAKE PADS

APPLICAZIONI PER CODICE PASTIGLIA / applications for pads code

AGPA96						
MARCA Brand	MODELLO Model	CC	DA From	A To	ANT. Front	POST. Rear
DUCATI	795 MONSTER	795	2012		X	
DUCATI	796 HYPERMOTARD	796	2010	2012	X	
DUCATI	796 MONSTER (RAD.CAL)	796	2011	2014	X	
DUCATI	800 MONSTER DARK I.E., S I.E.	800	2003	2007	X	
DUCATI	800 MONSTER I.E., S I.E.	800	2003	2007	X	
DUCATI	800 SPORT	800	2003		X	
DUCATI	800 SUPERSPORT	800	2003		X	
DUCATI	848 (RAD.CAL)	848	2008	2010	X	
DUCATI	848 STREETFIGHTER	848	2012		X	
DUCATI	900 MONSTER	900	2000	2001	X	
DUCATI	900 MONSTER I.E. 02 HS	900	2002		X	
DUCATI	900 SUPER SPORT	900	1998		X	
DUCATI	MH 900	900	2000		X	
DUCATI	916 MONSTER S4	916	2001	2003	X	
DUCATI	916 SPORT TOURING 4	916	1999	2001	X	
DUCATI	916 SPS	916	1997	1998	X	
DUCATI	944 SPORT TOURING	944	1998		X	
DUCATI	944 ST2	944	1997		X	
DUCATI	992 ST3	992	2004		X	
DUCATI	992 ST3S ABS	992	2006		X	
DUCATI	996 , SPS	996	1999	2001	X	
DUCATI	996 MONSTER S4R	996	2004		X	
DUCATI	996 ST4S	996	2002		X	
DUCATI	996 ST4S ABS	996	2003		X	
DUCATI	998 , S	998	2002		X	
DUCATI	1000 MONSTER DARK I.E., S I.E.	1000	2003		X	
DUCATI	1000 MONSTER I.E., S I.E.	1000	2003		X	
DUCATI	1000 MONSTER S2R	1000	2006		X	
DUCATI	1000 MULTISTRADA	1000	2007		X	
DUCATI	1000 MULTISTRADA DS	1000	2003	2006	X	
DUCATI	1000 MULTISTRADA S DS	1000	2005		X	
DUCATI	1000 SUPERSPORT DS	1000	2003		X	
DUCATI	1100 HYPERMOTARD EVO	1100	2010		X	
DUCATI	1100 MONSTER (RAD.CAL)	1100	2009		X	
DUCATI	1100 MONSTER EVO (RAD.CAL)	1100	2011		X	
DUCATI	1100 MONSTER S (RAD.CAL)	1100	2009		X	
DUCATI	1100 MULTISTRADA	1100	2007	2009	X	
DUCATI	1100 MULTISTRADA S	1100	2007	2009	X	
DUCATI	1200 MULTISTRADA	1200	2010	2014	X	
DUCATI	1200 MULTISTRADA S GT	1200	2013	2014	X	
DUCATI	1200 MULTISTRADA S PIKES PEAK	1200	2011	2014	X	
DUCATI	1200 MULTISTRADA S SPORT	1200	2010	2014	X	
DUCATI	1200 MULTISTRADA S TOURING	1200	2010	2014	X	
HOREX	VR6 1200	1200	2011		X	
HUSQVARNA	570 NOX	570	2001	2003	X	
HUSQVARNA	LT 610	610	2000		X	
HUSQVARNA	SM 610 SUPER MOTARD, S	610	1998		X	
HUSQVARNA	SMR 630	630	2004	2008	X	
HUSQVARNA	900 NUDA	900	2012		X	
KTM	SMC 625	625	2005		X	
KTM	640 DUKE	640	2003		X	
KTM	LC4 640 SUPERMOTO	640	2004		X	
KTM	SMC 660 SUPERMOTO	660	2004		X	
KTM	690 DUKE ABS	690	2012		X	
KTM	1050 ADVENTURE	1050	2015		X	
KTM	1190 ADVENTURE	1050	2013		X	
KTM	1290 SUPER ADVENTURE	1290	2015		X	
MOTO GUZZI	750 BREVA	750	2003		X	

AGPA96						
MARCA Brand	MODELLO Model	CC	DA From	A To	ANT. Front	POST. Rear
MOTO GUZZI	750 NEVADA CLASSIC IE	750	2006		X	
MOTO GUZZI	750 NEVADA, NEVADA CLUB	750	2003		X	
MOTO GUZZI	V7 750 CAFE CLASSIC	750	2010		X	
MOTO GUZZI	V7 750 CLASSIC	750	2009	2012	X	
MOTO GUZZI	V7 750 CLUBMAN RACER	750	2010		X	
MOTO GUZZI	V7 750 RACER	750	2011		X	
MOTO GUZZI	V7 750 RACER	750	2012	2014	X	
MOTO GUZZI	V7 750 STONE	750	2012	2014	X	
MOTO GUZZI	V7 II 750 RACER	750	2015		X	
MOTO GUZZI	V7 II 750 SPECIAL	750	2015		X	
MOTO GUZZI	V7 II 750 STONE	750	2015		X	
MOTO GUZZI	940 CUSTOM	940	2007		X	
MOTO GUZZI	1100 CALIFORNIA EV	1100	2006		X	
MOTO GUZZI	1100 CALIFORNIA EV TOURING	1100	2006		X	
MOTO GUZZI	1100 CALIFORNIA JACKAL	1100	2001		X	
MOTO GUZZI	1100 CALIFORNIA JACKAL BASIC	1100	2001		X	
MOTO GUZZI	1100 CALIFORNIA SPECIAL	1100	2001		X	
MOTO GUZZI	1100 CALIFORNIA SPECIAL SPORT ALLOY	1100	2002		X	
MOTO GUZZI	1100 CALIFORNIA STONE METAL	1100	2002		X	
MOTO GUZZI	1100 CALIFORNIA STONE, STONE TOURING	1100	2002		X	
MOTO GUZZI	1100 CALIFORNIA TITANIUM	1100	2003		X	
MOTO GUZZI	1100 CALIFORNIA VINTAGE	1100	2006		X	
MOTO GUZZI	1100 GRISO	1100	2005		X	
MOTO GUZZI	EV 1100 CALIFORNIA, 80, TOURING	1100	2001		X	
MOTO GUZZI	V 1100 BREVA	1100	2004		X	
MOTO GUZZI	V 1100 BREVA, ABS	1100	2005	2007	X	
MOTO GUZZI	V11 1100 , SCURA, SPORT SCURA	1100	2002		X	
MOTO GUZZI	V11 1100 LEMANS, LEMANS TENNI, LEMANS ROSSO CORSA	1100	2001		X	
MOTO GUZZI	V11 1100 SPORT ROSSO MANDELL	1100	2001		X	
MOTO GUZZI	V11 1100 SPORT, SPORT NAKED	1100	2001		X	
MOTO GUZZI	1200 GRISO 8V	1100	2007		X	
MOTO GUZZI	1200 NORGE	1200	2006		X	
MOTO GUZZI	1200 NORGE GT 8V	1200	2010		X	
MOTO GUZZI	1200 SPORT	1200	2007	2008	X	
MOTO GUZZI	1200 SPORT 4V	1200	2009	2011	X	
MOTO GUZZI	1200 SPORT 8V	1200	2012		X	
MOTO GUZZI	1200 SPORT 8V SE	1200	2012		X	
MOTO GUZZI	1200 STELVIO	1200	2008	2011	X	
MOTO GUZZI	1200 STELVIO 8V SE	1200	2012		X	
MOTO GUZZI	1200 STELVIO NTX	1200	2009	2011	X	
MOTO GUZZI	V 1200 BREVA	1200	2008		X	
MOTO GUZZI	1400 CALIFORNIA CUSTOM	1400	2013		X	
MOTO GUZZI	1400 CALIFORNIA TOURING	1400	2013		X	
MOTO MORINI	1200 9 1/2	1200	2006		X	
MOTO MORINI	1200 CORSARO	1200	2006		X	
MOTO MORINI	1200 SPORT	1200	2008		X	
MV AGUSTA	675 BRUTALE	675	2012		X	
MV AGUSTA	675 F3	675	2011	2014	X	
MV AGUSTA	800 BRUTALE	800	2013		X	
MV AGUSTA	800 BRUTALE DRAGSTER	800	2015		X	
MV AGUSTA	800 BRUTALE DRAGSTER RR	800	2015		X	

PASTIGLIE BRAKE PADS

APPLICAZIONI PER CODICE PASTIGLIA / applications for pads code

AGPA96						
MARCA Brand	**MODELLO** Model	**CC**	**DA** From	**A** To	**ANT.** Front	**POST.** Rear
MV AGUSTA	800 BRUTALE RR	800	2015		X	
MV AGUSTA	920 BRUTALE	920	2012	2014	X	
MV AGUSTA	989 BRUTALE R	989	2009		X	
MV AGUSTA	990 BRUTALE R	990	2010	2011	X	
MV AGUSTA	1090 BRUTALE R	1090	2012		X	
MZ	1000 (MUZ) S	1000	2001	2002	X	
NORTON	961 COMMANDO SE	961	2010	2011	X	
NORTON	961 COMMANDO SF SPORT	961	2011		X	
SUZUKI	GSX 1200	1200	1999	2001	X	
VICTORY	1500 KINGPIN	1500	2004	2005	X	
VICTORY	1500 TOURING CRUISER	1500	2003	2006	X	
VICTORY	1500 V92C CRUISER	1500	1998	2002	X	
VICTORY	1500 V92C DELUXE	1500	2001	2002	X	
VICTORY	1500 V92SC SPORT CRUISER	1500	2000	2002	X	

AGPA96						
MARCA Brand	**MODELLO** Model	**CC**	**DA** From	**A** To	**ANT.** Front	**POST.** Rear
VICTORY	1500 VEGAS	1500	2003	2005	X	
VICTORY	1500 VEGAS 8-BALL	1500	2005		X	
VICTORY	1634 HAMMER	1634	2005	2007	X	
VICTORY	1634 HAMMER S	1634	2006	2008	X	
VICTORY	1634 KINGPIN	1634	2006	2007	X	
VICTORY	1634 KINGPIN TOUR	1634	2006	2007	X	
VICTORY	1634 VEGAS	1634	2006	2007	X	
VICTORY	1634 VEGAS 8-BALL	1634	2006	2007	X	
VICTORY	1634 VEGAS JACKPOT	1634	2006	2007	X	
VOXAN	VB1 1000 EVO	1000	2004		X	
YAMAHA	XJR 400 R	400	1995		X	
YAMAHA	XT 660 X	660	2004		X	
YAMAHA	TRX 850 (ITALY)	850	1995		X	
YAMAHA	XJR 1200 (ITALY)	1200	1995	1998	X	

MESCOLA ORGANICA, SINTERIZZATA, ZXC, EV1 E EV2 organic, sintered, zxc, ev1 and ev2 compounds
OR / ST / ZXC / EV1 / EV2

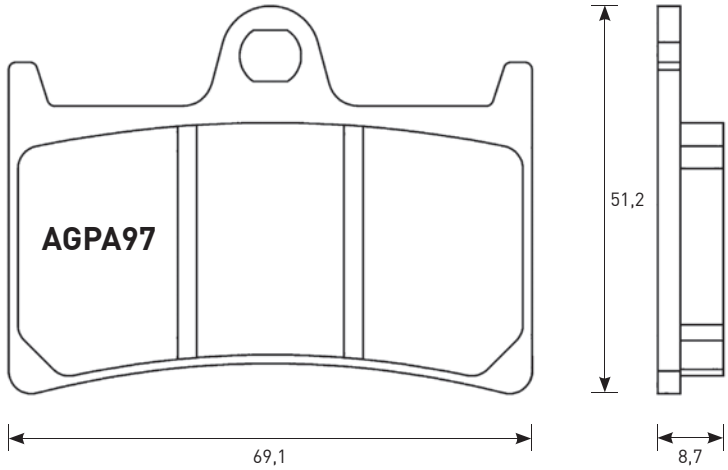

CROSS REFERENCE	
EBC	FA252/FA380
OGNIBENE	210
BRAKING	786
NEWFREN	.FD.0190
BREMBO	07YA2307
FERODO	FDB605
CL	2361/3091
SBS	198/634/639

EQUIVALENT OE #	
OEM Yamaha	4XVW004500
OEM Yamaha	5VNW004500
OEM Yamaha	4SV W0045 00
OEM Yamaha	4B5W004500
OEM Yamaha	5JJ W004 500
OEM Yamaha	5FL W0045 00
OEM Yamaha	5SL W0045 00
OEM Yamaha	1D7W004500
OEM Yamaha	2C0 W0045 00
OEM Yamaha	3TJ W0045 00
OEM Yamaha	5PW W0045 00

AGPA97						
MARCA Brand	**MODELLO** Model	**CC**	**DA** From	**A** To	**ANT.** Front	**POST.** Rear
YAMAHA	TZR 125	125	1994		X	
YAMAHA	TZR 125 R	125	1994		X	
YAMAHA	FZR 250 R	250	1989		X	
YAMAHA	TZR 250	250	1989	1992	X	
YAMAHA	FZR 400 R	400	1991		X	
YAMAHA	XP 500 TMAX	500	2008	2011	X	
YAMAHA	XP 500 TMAX TECH MAX	500	2011		X	
YAMAHA	XP 530 TMAX	530	2012	2015	X	
YAMAHA	XP 530 TMAX IRON MAX	530	2015		X	
YAMAHA	FZ6 600 FAZER S2	600	2007		X	
YAMAHA	FZ6 600 FAZER S2 ABS	600	2007		X	
YAMAHA	FZ6 600 S2	600	2007		X	
YAMAHA	FZ6 600 S2 ABS	600	2007		X	
YAMAHA	FZS 600 FAZER	600	1998	2003	X	

AGPA97						
MARCA Brand	**MODELLO** Model	**CC**	**DA** From	**A** To	**ANT.** Front	**POST.** Rear
YAMAHA	FZS 600 S FAZER	600	2001	2003	X	
YAMAHA	YZF 600 R THUNDER CAT	600	1996	2003	X	
YAMAHA	YZF 600 R6	600	1999	2002	X	
YAMAHA	YZF 600 R6	600	2003	2004	X	
YAMAHA	YZF 600 R6 (RAD.CAL)	600	2005	2006	X	
YAMAHA	MT-07 700	700	2014		X	
YAMAHA	MT-07 700 MOTO CAGE	700	2015		X	
YAMAHA	YZF 750 R7 OW02	750	1999		X	
YAMAHA	800 FAZER 8	800	2010		X	
YAMAHA	FZ8 800	800	2010		X	
YAMAHA	MT-09 850 (RAD.CAL)	850	2014		X	
YAMAHA	MT-09 850 SPORT TRACKER (RAD.CAL)	850	2015		X	
YAMAHA	MT-09 850 STREET RALLY (RAD.CAL)	850	2014		X	
YAMAHA	MT-09 850 TRACER (RAD.CAL)	750	2015		X	
YAMAHA	TDM 900	900	2002		X	
YAMAHA	FZ1 1000 FAZER	1000	2006		X	
YAMAHA	FZS 1000 FAZER	1000	2001	2005	X	
YAMAHA	YZF 1000 R THUNDER ACE	1000	1996		X	
YAMAHA	YZF 1000 R1	1000	1998	2003	X	
YAMAHA	YZF 1000 R1 (RAD.CAL)	1000	2004	2006	X	
YAMAHA	YZF 1000 R1 (RAD.CAL)	1000	2015		X	
YAMAHA	YZF 1000 R1 SP (RAD.CAL)	1000	2006		X	
YAMAHA	YZF 1000 R1M (RAD.CAL)	1000	2015		X	
YAMAHA	BT 1100 BULLDOG	1100	2002		X	

ACCOSSATO

PASTIGLIE BRAKE PADS

APPLICAZIONI PER CODICE PASTIGLIA / applications for pads code

AGPA97						
MARCA Brand	MODELLO Model	CC	DA From	A To	ANT. Front	POST. Rear
YAMAHA	XTZ 1200 SUPER TENERE	1200	2010		X	
YAMAHA	XTZ 1200 ZE	1200	2014		X	
YAMAHA	FJR 1300	1300	2001		X	
YAMAHA	FJR 1300 ABS	1300	2003	2005	X	
YAMAHA	XJR 1300	1300	1999	2002	X	
YAMAHA	XJR 1300 RACER	1300	2015		X	

AGPA97						
MARCA Brand	MODELLO Model	CC	DA From	A To	ANT. Front	POST. Rear
YAMAHA	XJR 1300 SP	1300	2001		X	
YAMAHA	MT-01 1700 (RAD.CAL)	1700	2005	2006	X	
YAMAHA	XV 1700 PC ROAD STAR WARRIOR	1700	2003		X	
YAMAHA	XV 1700 ROAD STAR WARRIOR	1700	2002		X	
YAMAHA	XV 1900 MIDNIGHT STAR	1900	2006		X	

MESCOLA ORGANICA E SINTERIZZATA organic and sintered compound
OR / ST

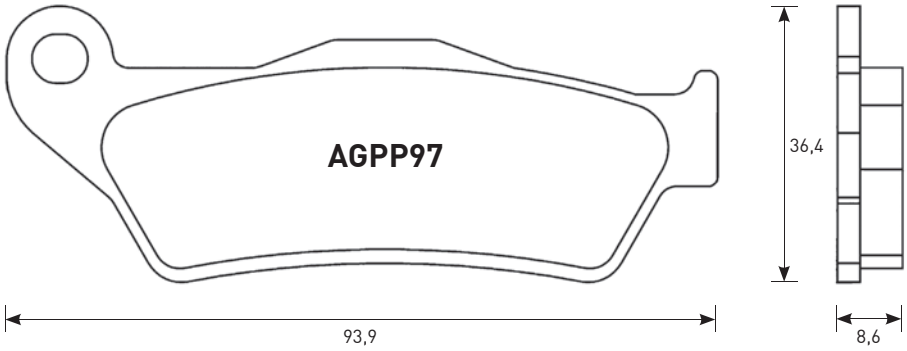

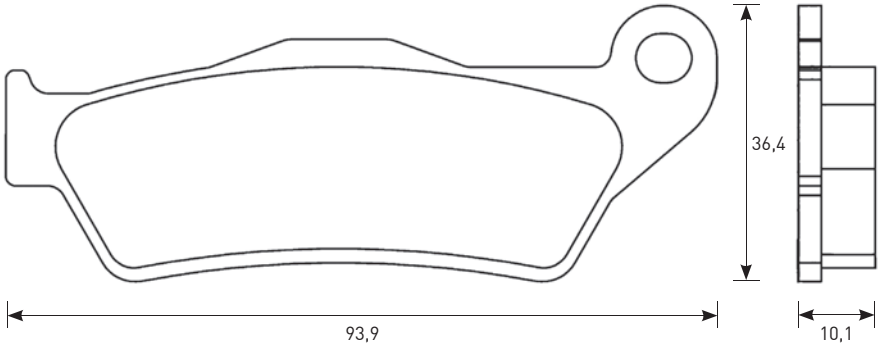

CROSS REFERENCE	
EBC	FA363
OGNIBENE	277
BRAKING	794
NEWFREN	.FD.0229
BREMBO	07BB28
FERODO	FDB2039
CL	2900
SBS	742

EQUIVALENT OE #	
OEM Aprilia	8133516
OEM BMW	34 21 2 335 465
OEM BMW	34 21 7 671 881
OEM BMW	34 21 7 660 281
OEM BMW	34 21 2 330 633
OEM BMW	34 21 2 332 988
OEM BMW	34 21 2 314 997AE

AGPP97						
MARCA Brand	MODELLO Model	CC	DA From	A To	ANT. Front	POST. Rear
BMW	R 850 C	850	1999			X
BMW	R 850 GS	850	1999			X
BMW	R 850 R	850	1996			X
BMW	R 850 R	850	2003			X
BMW	R 850 RT WITH INTEGRAL ABS	850	2001			X
BMW	R 1100 GS	1100	1999			X
BMW	R 1100 R	1100	1999			X
BMW	R 1100 RT	1100	1995			X
BMW	R 1100 S	1100	1999	2000		X
BMW	R 1100 S WITH INTEGRAL ABS	1100	2001			X
BMW	R 1100 S WITHOUT INTEGRAL ABS	1100	2001			X
BMW	R1100 1100 GS	1100	1994			X
BMW	R 1150 GS	1150	2000	2001		X

AGPP97						
MARCA Brand	MODELLO Model	CC	DA From	A To	ANT. Front	POST. Rear
BMW	R 1150 GS, GS ADVENTURER	1150	2002			X
BMW	R 1150 R	1150	2001			X
BMW	R 1150 R ROCKSTER	1150	2003			X
BMW	R 1150 RS	1150	2001			X
BMW	R 1150 RT WITH INTEGRAL ABS	1150	2001			X
BMW	1200 HP2 MEGAMOTO	1200	2007			X
BMW	K 1200 R	1200	2005	2008		X
BMW	K 1200 R SPORT	1200	2007			X
BMW	K 1200 S	1200	2005	2008		X
BMW	R 1200 C	1200	1998	2002		X
BMW	R 1200 C CLASSIC	1200	2003	2004		X
BMW	R 1200 C INDEPENDENT	1200	2003			X
BMW	R 1200 C MONTAUK	1200	2004			X
BMW	R 1200 GS	1200	2004	2012		X
BMW	R 1200 GS TRIPLE BLACK	1200	2011			X
BMW	R 1200 R	1200	2007	2014		X
BMW	R 1200 RT	1200	2006	2013		X
BMW	R 1200 S	1200	2006			X
BMW	R 1200 ST	1200	2006			X
BMW	K 1300 R	1300	2009			X
BMW	K 1300 R DYNAMIC	1300	2011			X
BMW	K 1300 S	1300	2009			X

PASTIGLIE BRAKE PADS

APPLICAZIONI PER CODICE PASTIGLIA / applications for pads code

MESCOLA ORGANICA organic compound
OR

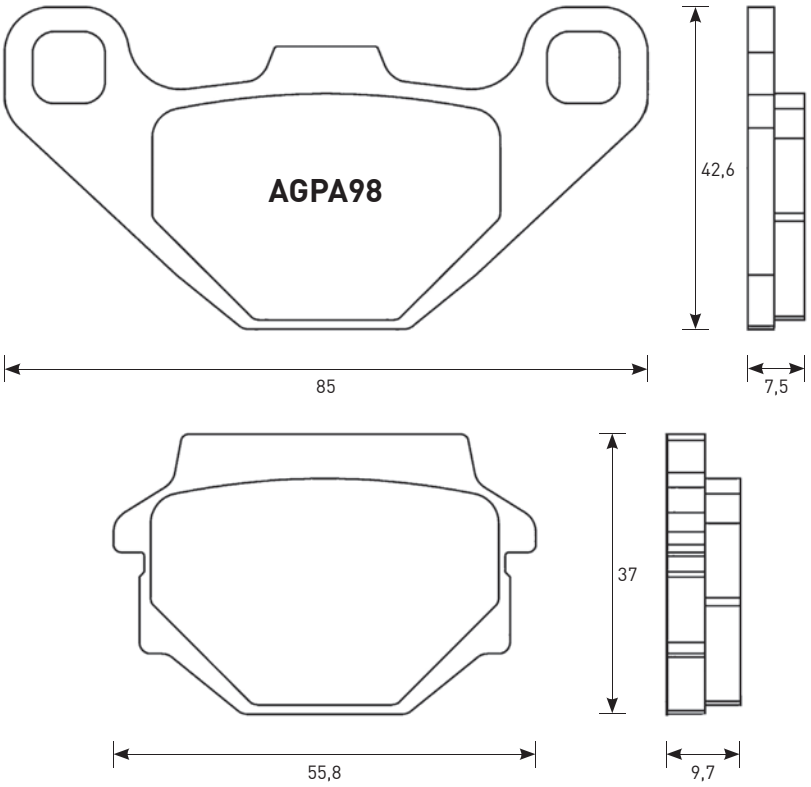

CROSS REFERENCE	
EBC	**FA067/FA251**
OGNIBENE	**236**
BRAKING	**669**
NEWFREN	**.FD.0073**
BREMBO	**07KS0432**
FERODO	**FDB314**
CL	**2306**
SBS	**546/586/692**

EQUIVALENT OE #	
OEM Kawasaki	**43082 1163**
OEM Kawasaki	**43050 1064**
OEM Kawasaki	**43082 1116**
OEM Kawasaki	**43082 1096**
OEM Kawasaki	**43082 1209**

AGPA98						
MARCA Brand	**MODELLO** Model	**CC**	**DA** From	**A** To	**ANT.** Front	**POST.** Rear
APRILIA	**RX 125**	**125**	**1990**	**1991**		**X**
APRILIA	**RX 125**	**125**	**1997**			**X**
APRILIA	**125 PEGASO**	**125**	**1990**	**1991**		**X**
APRILIA	**125 TUAREG WIND**	**125**	**1990**			**X**
APRILIA	**350 TUAREG WIND**	**350**	**1990**			**X**
APRILIA	**600 TUAREG**	**600**	**1988**			**X**
APRILIA	**600 TUAREG WIND**	**600**	**1990**			**X**
APRILIA	**650 MOTO**	**650**	**1995**			**X**
APRILIA	**650 PEGASO**	**650**	**1995**			**X**
APRILIA	**650 STARCK**	**650**	**1996**			**X**
BATAVUS	**GRAND PRIX**		**1980**		**X**	
BOMBARDIER	**200 RALLY 2X4**	**200**	**2005**	**2006**		**X**
BUELL	**ALL MODELS**		**1994**	**1997**		**X**
BUELL	**RS 1200 HF**	**1200**				**X**
CAGIVA	**125 CROSS**	**125**	**1986**			**X**
CAGIVA	**125 W 8**	**125**	**1996**			**X**
CAGIVA	**WMX 125**	**125**	**1989**	**1990**		**X**
CAGIVA	**WMX 250**	**250**	**1989**	**1990**		**X**
CAGIVA	**600 W 16**	**600**	**1995**			**X**

AGPA98						
MARCA Brand	**MODELLO** Model	**CC**	**DA** From	**A** To	**ANT.** Front	**POST.** Rear
FANTIC	**50 .1 RAIDER**	**50**	**1987**		**X**	
FANTIC	**50 STRADA**	**50**	**1983**		**X**	
DERBI	**DXR 200 QUAD (FRONT DISC)**	**200**	**2004**			**X**
DERBI	**DXR 200 QUAD (FRONT DRUM)**	**200**	**2004**			**X**
DERBI	**DXR 250 QUAD (FRONT DISC)**	**250**	**2004**			**X**
DERBI	**DXR 250 QUAD (FRONT DRUM)**	**250**	**2004**			**X**
HUSABERG	**ALL MODELS**		**1989**	**1993**		**X**
HUSABERG	**350**	**350**	**1991**			**X**
HUSABERG	**500**	**500**	**1991**			**X**
HUSABERG	**501 ENDURO SI**	**501**				**X**
HUSABERG	**600 ENDURO SI**	**600**				**X**
HUSQVARNA	**CR/WR 125**	**125**	**1991**			**X**
HUSQVARNA	**WRK 125**	**125**	**1990**			**X**
HUSQVARNA	**WRK 240**	**240**	**1990**			**X**
HUSQVARNA	**WR 240**	**240**	**1991**			**X**
HUSQVARNA	**CR 250**	**250**	**1991**			**X**
HUSQVARNA	**WR 260**	**260**	**1990**			**X**
HUSQVARNA	**TE 350 ENDURO**	**350**	**1990**			**X**
HUSQVARNA	**510**	**510**	**1990**			**X**
HUSQVARNA	**TC 610 CROSS**	**610**	**1991**			**X**
HUSQVARNA	**TE 610**	**610**	**1991**	**1995**		**X**
KAWASAKI	**KH 100 EX**	**100**	**1988**		**X**	
KAWASAKI	**KH 100 GH**	**100**	**1983**		**X**	
KAWASAKI	**AR 125 A1, A1A, A7, LC**	**125**	**1982**	**1994**	**X**	
KAWASAKI	**KE 125**	**125**	**1986**		**X**	

ACCOSSATO

PASTIGLIE BRAKE PADS

APPLICAZIONI PER CODICE PASTIGLIA / applications for pads code

AGPA98						
MARCA Brand	MODELLO Model	CC	DA From	A To	ANT. Front	POST. Rear
KAWASAKI	KH 125	125	1982	1998	X	
KAWASAKI	KMX 125	125	1986	2002		X
KAWASAKI	KX 125 B2, C1, D1	125	1983	1985	X	
KAWASAKI	KX 125 E1	125	1986		X	X
KAWASAKI	KX 125 E2, F1	125	1987	1988		X
KAWASAKI	KDX 200 C	200	1986	1988	X	
KAWASAKI	KDX 200 SR, E1-E4	200	1989	1992	X	
KAWASAKI	KMX 200 A2, A3, A4	200	1988	1990		X
KAWASAKI	Z 200 A6	200	1983		X	
KAWASAKI	250 ESTRELLA	250	1992		X	X
KAWASAKI	GPZ 250 BELT DRIVE	250	1983	1984	X	
KAWASAKI	KL 250 D2-D14 (KLR 250)	250	1985	1997	X	
KAWASAKI	KL 250 SUPER SHERPA	250	2000			X
KAWASAKI	KR 250	250	1985		X	
KAWASAKI	KX 250 C1,C2,D1	250	1983	1985	X	
KAWASAKI	KX 250 D2	250	1986			X
KAWASAKI	KX 250 E1, F1	250	1987	1988		X
KAWASAKI	KXT 250 A2, B1 TECATE	250	1985	1986		X
KAWASAKI	Z 250 T, SCORPION	250	1989		X	
KAWASAKI	ZR 250 BALIUS	250	1991	1995		X
KAWASAKI	ZZR 250	250	1990	2001		X
KAWASAKI	KLF 300 B1-B13 BAYOU	300	1988		X	
KAWASAKI	GPZ 305	305	1981	1996	X	
KAWASAKI	KLR 350	350	1985		X	
KAWASAKI	EX-4 400	400	1995			X
KAWASAKI	FX 400 R	400	1986	1988	X	
KAWASAKI	GPZ 400	400	1985	1987	X	
KAWASAKI	KLE 400	400	1991			X
KAWASAKI	LX 400 ELIMINATOR, SE	400	1990		X	
KAWASAKI	Z 400 F	400	1984		X	
KAWASAKI	ZR 400 F, A1	400	1983	1984	X	
KAWASAKI	ZR 400 XANTHUS (ZR 400D1)	400	1992			X
KAWASAKI	ZX 400	400	1985		X	
KAWASAKI	EX 500 D1-D3 NINJA	500	1994	1997		X
KAWASAKI	EX 500 E1-E3	500	1994	1996		X
KAWASAKI	GPZ 500 S	500	1988		X	
KAWASAKI	GPZ 500	500	1995	1996	X	X
KAWASAKI	GPZ 500	500	1997			X
KAWASAKI	GPZ 500 S	500	1988	1992	X	
KAWASAKI	GPZ 500 S (AUSTRIA)	500	1994	1997		X
KAWASAKI	KX 500 A1,2,B1	500	1983	1985	X	
KAWASAKI	KX 500 B2	500	1986		X	
KAWASAKI	KL 500 TENGAI (AUSTRIA)	500	1989	1991		X
KAWASAKI	KLE 500 A1-	500	1991			X
KAWASAKI	KLR 500 (AUSTRIA)	500	1987	1988		X
KAWASAKI	KX 500 B2	500	1986			X
KAWASAKI	KX 500 C1, D1	500	1987	1988		X
KAWASAKI	KX 550 A	550	1983		X	
KAWASAKI	Z 550 F	550	1983		X	

AGPA98						
MARCA Brand	MODELLO Model	CC	DA From	A To	ANT. Front	POST. Rear
KAWASAKI	Z 550 GT	550	1983		X	
KAWASAKI	ZR 550 A1, GP	550	1983	1984	X	
KAWASAKI	KL 600 A1,B1,B2	600	1984	1986	X	
KAWASAKI	KLR 600	600	1984	1986	X	
KAWASAKI	KLR 600 E	600	1985	1994	X	
KAWASAKI	KLR 650 A1-A19, A6F-A7F	650	1987	2007		X
KAWASAKI	KLR 650 B1-B3 TENGAI	650	1989	1991		X
KAWASAKI	KLR 650 C1-C4	650	1995	1998		X
KAWASAKI	KLR 650 C5-C10	650	1999	2004		X
KRAM-IT	50 SCRAMBLER HF	50	1950			X
KRAM-IT	ER 125	125	1989	1993		X
KRAM-IT	MC 250	250	1989			X
KRAM-IT	ER 300	300	1989			X
KTM	GS, EXC, ENDURO MODELS		1991			X
KTM	MX 125	125	1989	1990		X
KTM	MX 125 - 600 CCM	125	1991		X	
KTM	MX 125	125	1992	1993		X
KTM	GS 125	125	1989	1990	X	
KTM	GS 125	125	1992			X
KTM	GS 250	250	1989	1990		X
KTM	MX 250	250	1989	1990		X
KTM	MX 250	250	1992	1993		X
KTM	EXC 300	300	1993	1996		X
KTM	MX 300	300	1990			X
KTM	MX 300	300	1992			X
KTM	LC4 350	350	1992			X
KTM	LC4 600 SIX DAYS	600	1992			X
KTM	MX 500	500	1989	1993		X
LAVERDA	700 EL CID	700	1990		X	X
MAICO	ALL MODELS		1991			X
POLARIS	200 PHOENIX	200	2005	2010		X
SUZUKI	50 WOLF	50	1989		X	
SUZUKI	RB 50 H	50	1987		X	
SUZUKI	GT 80 L /C	80	1981		X	
SUZUKI	RG 80 GAMMA	80		1987	X	
SUZUKI	TRS 118	118	1982	1983	X	
SUZUKI	GN 125 E M-T	125	1991	2004	X	
SUZUKI	GS 125 ESZ	125	1982		X	
SUZUKI	GT 125 T, ET	125	1980		X	
SUZUKI	TR 125	125	1983		X	
SUZUKI	TU 125 XT	125	1999		X	
SUZUKI	ET 240	240	1986		X	
SUZUKI	NZ 250 S	250	1986		X	
SUZUKI	GSX 400 EFX	400	1982		X	
SUZUKI	GSX 400 FD	400	1983		X	
SUZUKI	GSX 400 FX, FZ	400	1981	1982	X	
SUZUKI	GSX 400 S, KATANA	400	1983		X	
SUZUKI	GS 450 S	450	1986		X	
YAMAHA	YFM 90 RY RAPTOR	90	2009			X
YAMAHA	TDR 125 (ITALY)	125	1990	1993		X

PASTIGLIE BRAKE PADS

APPLICAZIONI PER CODICE PASTIGLIA / applications for pads code

MESCOLA ORGANICA E SINTERIZZATA organic and sintered compound
OR / ST

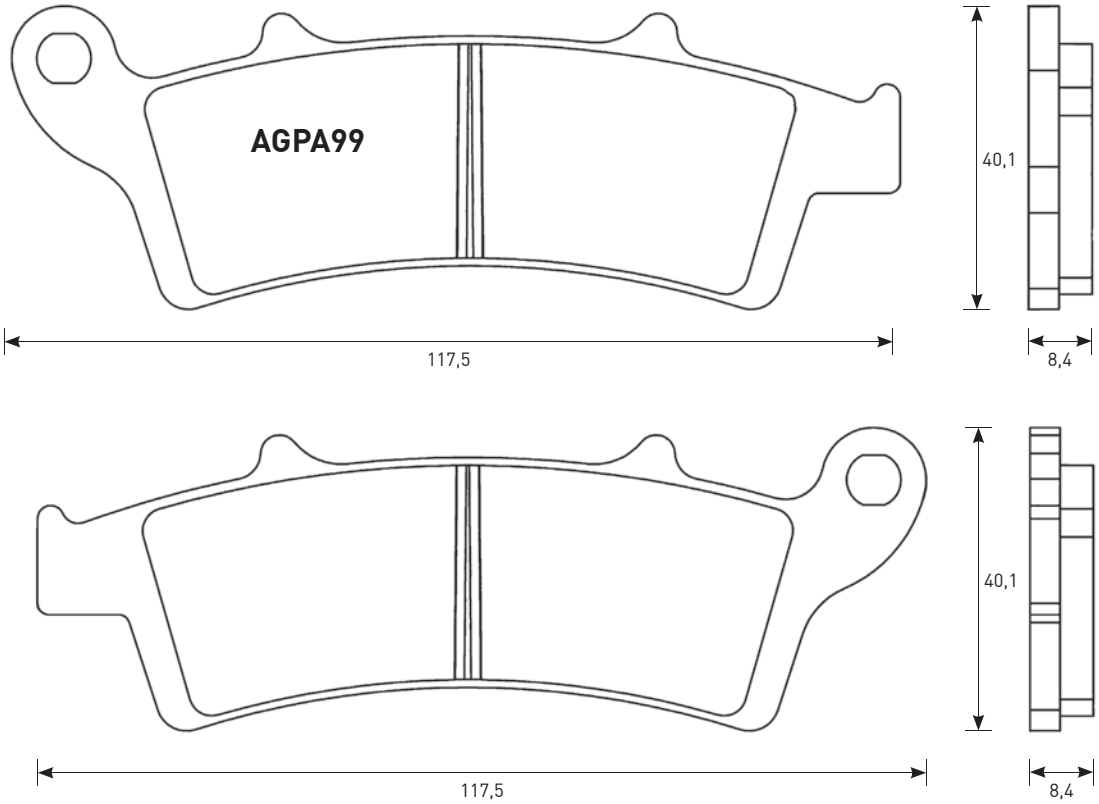

CROSS REFERENCE	
EBC	**FA324**
OGNIBENE	**162**
BRAKING	**853**
NEWFREN	**.FD.0282**
BREMBO	**7045**
FERODO	**FDB2105**
CL	**3056**
SBS	**159**

EQUIVALENT OE #	
OEM Aprilia	**8133815**
OEM Aprilia	**8133761**
OEM Aprilia	**8133603**

AGPA99						
MARCA Brand	**MODELLO** Model	**CC**	**DA** From	**A** To	**ANT.** Front	**POST.** Rear
APRILIA	**125 ATLANTIC**	**125**	**2003**		**X**	
APRILIA	**125 SCARABEO, SCARABEO GT**	**125**	**2004**		**X**	
APRILIA	**150 SCARABEO, SCARABEO GT**	**150**	**2004**		**X**	
APRILIA	**200 ATLANTIC**	**200**	**2003**		**X**	
APRILIA	**200 SCARABEO**	**200**	**2007**		**X**	

AGPA99						
MARCA Brand	**MODELLO** Model	**CC**	**DA** From	**A** To	**ANT.** Front	**POST.** Rear
APRILIA	**200 SCARABEO CLASS**	**200**	**2010**		**X**	
APRILIA	**200 SCARABEO IE**	**200**	**2012**		**X**	
APRILIA	**250 ATLANTIC IE**	**250**	**2007**		**X**	
APRILIA	**250 SCARABEO, SCARABEO IE**	**250**	**2006**		**X**	
APRILIA	**300 SCARABEO SPECIAL**	**300**	**2010**		**X**	
APRILIA	**500 ATLANTIC SPRINT**	**500**	**2006**		**X**	
KYMCO	**125 K-XCTI**	**125**	**2014**		**X**	
KYMCO	**125 PEOPLE GTI**	**125**	**2012**		**X**	
KYMCO	**200 PEOPLE GTI**	**200**	**2012**		**X**	
KYMCO	**300 K-XCTI**	**300**	**2012**		**X**	
KYMCO	**300 PEOPLE GTI**	**300**	**2012**		**X**	
MALAGUTI	**250 MADISON**	**250**	**1999**		**X**	
MALAGUTI	**K 400 MADISON**	**400**	**2002**		**X**	
PIAGGIO	**350 BEVERLY SPORT TOURING IE ABS**	**350**	**2012**		**X**	

ACCOSSATO

PASTIGLIE BRAKE PADS

APPLICAZIONI PER CODICE PASTIGLIA / applications for pads code

MESCOLA ORGANICA E SINTERIZZATA organic and sintered compound
OR / ST

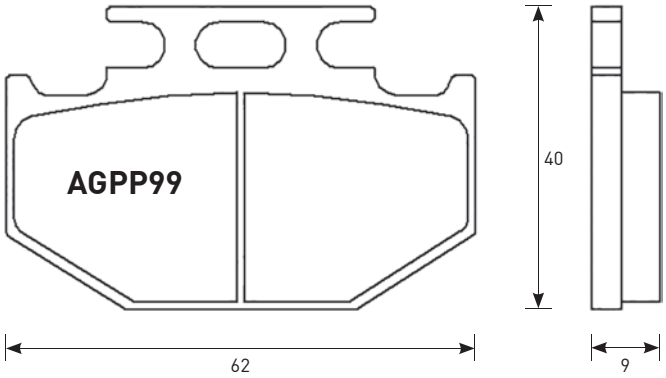

CROSS REFERENCE	
EBC	FA152
OGNIBENE	227
NEWFREN	.FD.0144
BREMBO	07KA1207
FERODO	FDB659
CL	2299
SBS	632/648

EQUIVALENT OE #	
OEM Kawasaki	43082 1137
OEM Kawasaki	43082 1090
OEM Kawasaki	43082 1151
OEM Kawasaki	43082 1131
OEM Kawasaki	43082 1118
OEM Suzuki	69100 43820
OEM Suzuki	69100 43841
OEM Suzuki	69100 43860
OEM Suzuki	69100 43851
OEM Suzuki	69100 32830
OEM Suzuki	69140 27C10
OEM Suzuki	69140 27C00
OEM Suzuki	69140 28C00
OEM Yamaha	1D4 F5742 00
OEM Yamaha	4DA W0046 00
OEM Yamaha	4GY W0046 00
OEM Yamaha	3XJ W0046 00
OEM Yamaha	4EW W0046 00
OEM Yamaha	3XP W0046 00
OEM Yamaha	3SP W0046 00

AGPP99						
MARCA Brand	MODELLO Model	CC	DA From	A To	ANT. Front	POST. Rear
CANNONDALE	MX 400	400	2000			X
CANNONDALE	C 440 R	440	2003			X
CANNONDALE	E 440R/A	440	2003			X
CANNONDALE	S 440	440	2003			X
CANNONDALE	X 440	440	2003			X
KAWASAKI	KDX 125 A, B	125	1990	1994		X
KAWASAKI	KX 125 G,H,J	125	1989	1993		X
KAWASAKI	KX 125 K1	125	1994			X
KAWASAKI	KDX 200 E5	200	1993			X
KAWASAKI	KDX 200 E6, H1-H9	200	1994	1999		X
KAWASAKI	KDX 200 SR, E1-E4	200	1989	1992		X
KAWASAKI	KDX 220 R A4	220	1997			X
KAWASAKI	KDX 250 SR, D1-D4	250	1991	1994		X
KAWASAKI	KLX 250 D1-D4, ES	250	1993	1996		X
KAWASAKI	KX 250 G1, H1-2,J1-2	250	1989	1993		X
KAWASAKI	KX 250 K1	250	1994			X
KAWASAKI	KX 500 E1-E5	500	1989	1993		X
KAWASAKI	KX 500 E6-E7	500	1994	1995		X
KAWASAKI	KLX 650 A1-3, C1-4	650	1993	1996		X

AGPP99						
MARCA Brand	MODELLO Model	CC	DA From	A To	ANT. Front	POST. Rear
KAWASAKI	KLX 650 R	650	1993	1995		X
SUZUKI	RM 125 K,L	125	1989	1990		X
SUZUKI	RM 125 M,N,P,R,S	125	1991	1995		X
SUZUKI	TS 125 R	125	1989	1996		X
SUZUKI	TS 200 R	200	1990	1994		X
SUZUKI	250 DJEBEL	250	1993			X
SUZUKI	DR 250 L,M,N,EP, ER,ES	250	1990	1995		X
SUZUKI	DR 250 SL,SM,SN,SEP,SER, SES	250	1990	1995		X
SUZUKI	DR-Z 250	250	2001			X
SUZUKI	RM 250 K,L	250	1989	1990		X
SUZUKI	RM 250 M,N,P,R,S	250	1991	1995		X
SUZUKI	RMX 250 K,L,M,N,P, R,S	250	1989	1995		X
SUZUKI	RMX 250 T-W	250	1996	1998		X
SUZUKI	DR 350 L,M,N,P,R,S	350	1990	1999		X
SUZUKI	DR 350 S,SH,SL,SM,SN,SP,SR,SE	350	1990	1996		X
SUZUKI	DR 350 V, W, X	350	1997			X
SUZUKI	DR 650 SE T-W	650	1996			X
YAMAHA	FZR 50	50	1992			X
YAMAHA	YD 80	80	1989			X
YAMAHA	WR 125	125	1991	1997		X
YAMAHA	YZ 125	125	1990	1995		X
YAMAHA	DT 200 WR	200	1991	1993		X
YAMAHA	WR 200	200	1991	1992		X
YAMAHA	TT 250 R	250	1993			X
YAMAHA	TY 250 Z (SCOTTISH)	250	1996			X
YAMAHA	WR 250	250	1990			X
YAMAHA	WR 250	250	1992	1997		X
YAMAHA	WR 250 ZB	250	1991			X
YAMAHA	XG 250 TRICKER	250	2005			X
YAMAHA	XT 250	250	2008			X
YAMAHA	YZ 250 A	250	1990			X
YAMAHA	YZ 250 B1-J1	250	1991	1997		X
YAMAHA	YZ 250 WRA,WRB	250	1990	1991		X
YAMAHA	TT 350	350	1995			X
YAMAHA	WR 400 F	400	1998			X
YAMAHA	YZ 400 F	400	1998			X
YAMAHA	WR 500 ZD,ZE	500	1992	1993		X
YAMAHA	TT 600 R	600	1993	1995		X

PASTIGLIE BRAKE PADS

APPLICAZIONI PER CODICE PASTIGLIA / applications for pads code

MESCOLA ORGANICA organic compound
OR

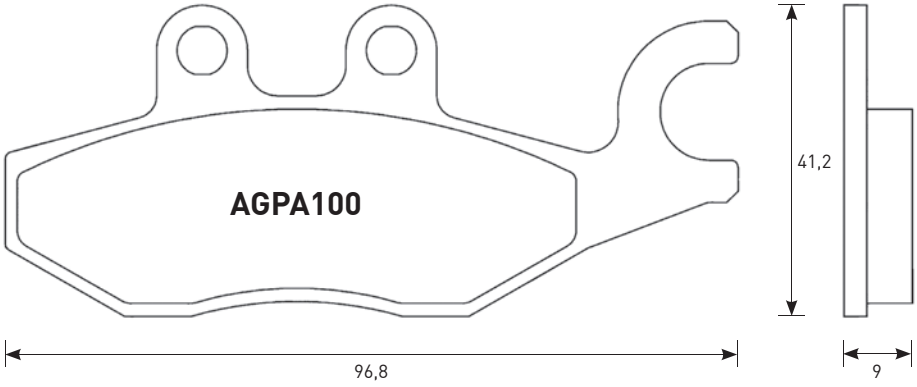

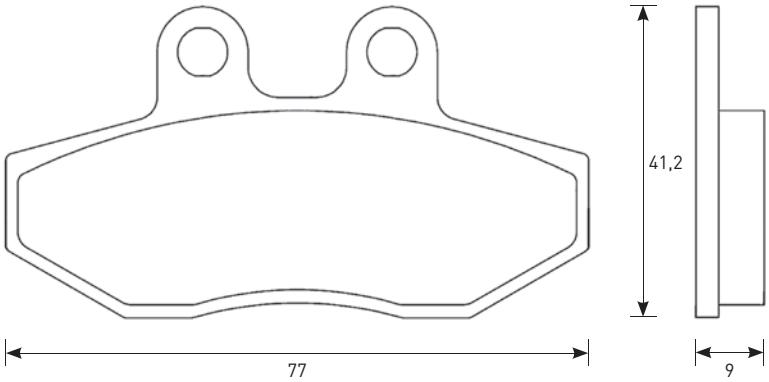

CROSS REFERENCE	
EBC	**FA418**
OGNIBENE	**170**
BRAKING	**953**
NEWFREN	**.FD.0365**
BREMBO	**7060**
FERODO	**FDB2186**
CL	**3077**
SBS	**187/818**

EQUIVALENT OE #	
497395	**665842**
647079	**668021**

AGPA100						
MARCA Brand	**MODELLO** Model	**CC**	**DA** From	**A** To	**ANT.** Front	**POST.** Rear
PIAGGIO	**MP3 125**	**125**	**2008**			**X**
PIAGGIO	**X10 EXECUTIVE RIGHT 125**	**125**	**2013**		**X**	
PIAGGIO	**X7 125**	**125**	**2008**			**X**
PIAGGIO	**X9 EVOLUTION RIGHT 125**	**125**	**2006**		**X**	
PIAGGIO	**X9 RIGHT 125**	**125**	**2004**		**X**	
PIAGGIO	**XEVO 125**	**125**	**2008**			**X**
PIAGGIO	**MP3 250**	**250**	**2008**			**X**

AGPA100						
MARCA Brand	**MODELLO** Model	**CC**	**DA** From	**A** To	**ANT.** Front	**POST.** Rear
PIAGGIO	**X7 250**	**250**	**2008**			**X**
PIAGGIO	**X9 RIGHT 250**	**250**	**2005**		**X**	
PIAGGIO	**XEVO 250**	**250**	**2008**			**X**
PIAGGIO	**BEVERLY I.E. 300**	**300**	**2011**			**X**
PIAGGIO	**MP3 300**	**300**	**2010**			**X**
PIAGGIO	**MP3 YOURBAN IE 300**	**300**	**2015**			**X**
PIAGGIO	**X7 EVO I.E. 300**	**300**	**2011**			**X**
PIAGGIO	**BEVERLY S 350**	**350**	**2014**			**X**
PIAGGIO	**BEVERLY SPORT TOURING IE 350**	**350**	**2012**			**X**
PIAGGIO	**BEVERLY SPORT TOURING IE ABS 350**	**350**	**2012**			**X**
PIAGGIO	**BV 350**	**350**	**2012**			**X**
PIAGGIO	**X10 EXECUTIVE RIGHT 350**	**350**	**2013**		**X**	
PIAGGIO	**X8 RIGHT 400**	**400**	**2007**		**X**	
PIAGGIO	**XEVO RIGHT 400**	**400**	**2008**		**X**	
PIAGGIO	**X10 EXECUTIVE RIGHT 500**	**500**	**2013**		**X**	

ACCOSSATO

PASTIGLIE BRAKE PADS

APPLICAZIONI PER CODICE PASTIGLIA / applications for pads code

MESCOLA ORGANICA, SINTERIZZATA, EV1 E EV2 organic, sintered, ev1 and ev2 compounds
OR / ST / EV1 / EV2

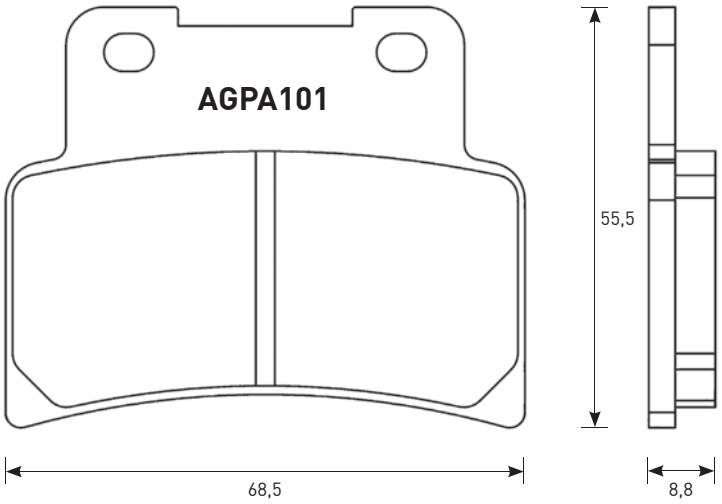

CROSS REFERENCE	
EBC	FA432
OGNIBENE	176
BRAKING	933
NEWFREN	.FD.0404
BREMBO	07GR7707
FERODO	FDB2216
CL	1187
SBS	844/214

EQUIVALENT OE #	
OEM Aprilia	8133943

AGPA101						
MARCA Brand	MODELLO Model	CC	DA From	A To	ANT. Front	POST. Rear
APRILIA	RS 125	125	2006		X	
APRILIA	SL 750 SHIVER GT, ABS	750	2009		X	
APRILIA	SL 750 SHIVER, ABS	750	2007		X	
APRILIA	SMV 750 DORSODURO	750	2009		X	
APRILIA	NA 850 MANA	850	2007		X	
APRILIA	NA 850 MANA GT, ABS	850	2009		X	
KYMCO	400 XCITING I	400	2012		X	
SYM	400 I MAXSYM	400	2011		X	
YAMAHA	MT 125	125	2014		X	
YAMAHA	YZF 125 R	125	2014		X	

MESCOLA ORGANICA E SINTERIZZATA organic and sintered compound
OR / ST

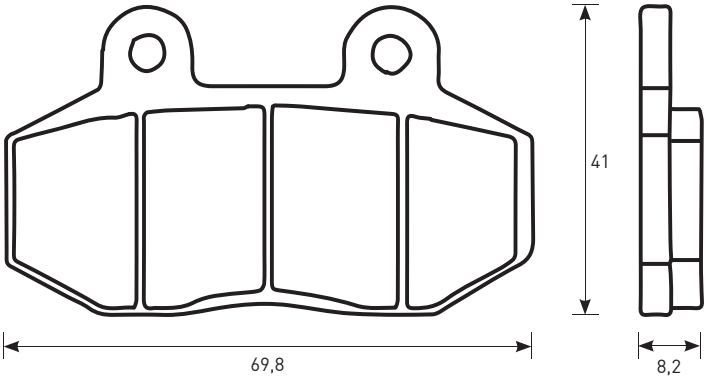

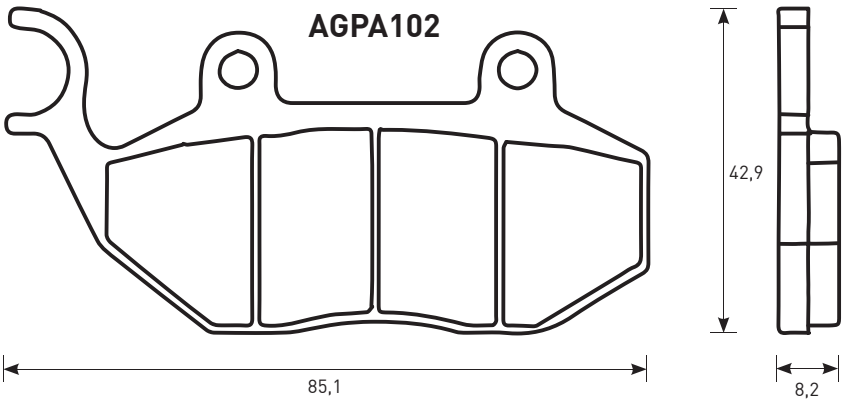

PASTIGLIE BRAKE PADS

APPLICAZIONI PER CODICE PASTIGLIA / applications for pads code

CROSS REFERENCE	
EBC	FA264
OGNIBENE	175
BRAKING	796
NEWFREN	.FD.0219
BREMBO	7005
FERODO	FDB2190
CL	3039
SBS	140/708

EQUIVALENT OE #	
OEM Sym	45105 T6R 000A
OEM Sym	45105 HKF 000A
OEM Sym	45105 G229 00A
OEM Sym	45105 G22 000AC

AGPA102						
MARCA Brand	MODELLO Model	CC	DA From	A To	ANT. Front	POST. Rear
CAGIVA	50 CITY	50	1995		X	
GARELLI	KRS 50	50	2002		X	
GARELLI	PMX 50 SPORT	50	2000		X	
GARELLI	125 FREELAND	125	2002		X	
GARELLI	125 T-REX	125	2000		X	
GARELLI	150 FREELAND	150	2002		X	
PEUGEOT	50 Tweet	50	2010	2013	X	
PEUGEOT	50 Tweet Evo	50	2014		X	
PEUGEOT	50 Tweet Evo RS	50	2014		X	
PEUGEOT	50 Tweet RS	50	2010	2013	X	
PEUGEOT	125 Tweet	125	2010	2013	X	
PEUGEOT	125 Tweet Evo	125	2014		X	
PEUGEOT	125 Tweet Evo RS	125	2014		X	
PEUGEOT	125 Tweet RS	125	2010	2013	X	
PEUGEOT	LXR 125	125	2010		X	
PEUGEOT	150 Tweet	150	2010	2013	X	
PEUGEOT	150 Tweet RS	150	2010	2013	X	
PEUGEOT	LXR 200	200	2010		X	
PGO	I-DEP		2009		X	
PGO	50 DR. BIG	50	2001		X	
PGO	50 G-MAX	50	2006		X	
PGO	50 LIBRA	50	2010		X	
PGO	50 LIGERO	50	2006		X	
PGO	50 T-REX	50	1999		X	
PGO	PMS 50	50	1999		X	
PGO	PMX 50 NAKED	50	2006		X	
PGO	PMX 50 SPORT	50	2001		X	
PGO	100 MY BUBU	100	2002		X	
PGO	110 T-REX	110	1999		X	
PGO	125 CHARGE A, B	125	2002		X	
PGO	125 LIGERO	125	2006		X	
PGO	125 MY BUBU, YOUNG BUBU	125	2002		X	
PGO	125 T-REX (2 STROKE)	125	1999		X	
PGO	125 T-REX (4 STROKE)	125	1999		X	
PGO	150 TR3	150	2002		X	
PGO	150 T-REX	150	2001		X	
SYM	50 ALLO	50	2011		X	
SYM	50 CROX	50	2014		X	

AGPA102						
MARCA Brand	MODELLO Model	CC	DA From	A To	ANT. Front	POST. Rear
SYM	50 FIDDLE	50	2009		X	
SYM	50 JET 4 NAKED	50	2011		X	
SYM	50 JET 4 R	50	2011		X	
SYM	50 JET BASIX	50	2007		X	
SYM	50 JET EURO X	50	2005		X	
SYM	50 JET SPORT X	50	2006		X	
SYM	50 JET SPORT X SR	50	2006		X	
SYM	50 JET, ALPHA	50	1995		X	
SYM	50 JUNGLE	50	1996		X	
SYM	50 MASK	50	2000		X	
SYM	50 MASK LC	50	2000		X	
SYM	50 ORBIT II	50	2012		X	
SYM	50 RED DEVIL	50	1997		X	
SYM	50 SUPER FANCY	50	1995	1997	X	
SYM	50 SYMPHONY	50	2009		X	
SYM	50 SYMPHONY SR	50	2011		X	
SYM	50 SYMPLY	50	2008		X	
SYM	50 X'PRO	50	2014		X	
SYM	100 JET	100	2000		X	
SYM	100 JET EURO X	100	2005		X	
SYM	100 JET SPORT X	100	2005		X	
SYM	100 PARTY	100	1997		X	
SYM	100 SUPER FANCY	100	1995		X	
SYM	110 STAR	110	2003		X	
SYM	125 ATTILA	125	1995		X	
SYM	125 ALLO	125	2011		X	
SYM	125 CITYCOM	125	2009		X	
SYM	125 CROX	125	2014		X	
SYM	125 FIDDLE	125	2009		X	
SYM	125 MEGALO	125	2002		X	
SYM	125 NEW DUKE	125	2002	2007	X	
SYM	125 SUPER DUKE	125	1995	2001	X	
SYM	125 SYMPHONY	125	2009		X	
SYM	125 SYMPHONY SR	125	2011		X	
SYM	125 SYMPLY	125	2008		X	
SYM	125 X'PRO	125	2014		X	
SYM	HD 125 EVO DT	125	2010		X	
SYM	HD2 125 EVO	125	2014		X	
SYM	150 ATTILA	150	2000		X	
SYM	H01 150	150	1995		X	
SYM	150 SUPER DUKE	150	1996	2001	X	
SYM	200 FIDDLE II	200	2011		X	
SYM	200 JOYRIDE EVO	200	2009		X	
SYM	HD 200 EVO	200	2007		X	
SYM	HD 200 EVO	200	2010		X	
SYM	HD2 200 EVO	200	2014		X	
SYM	300 CITYCOM	300	2009		X	X
SYM	300 CITYCOM S	300	2015		X	X

PASTIGLIE BRAKE PADS

APPLICAZIONI PER CODICE PASTIGLIA / applications for pads code

MESCOLA ORGANICA E SINTERIZZATA organic and sintered compounds
OR / ST

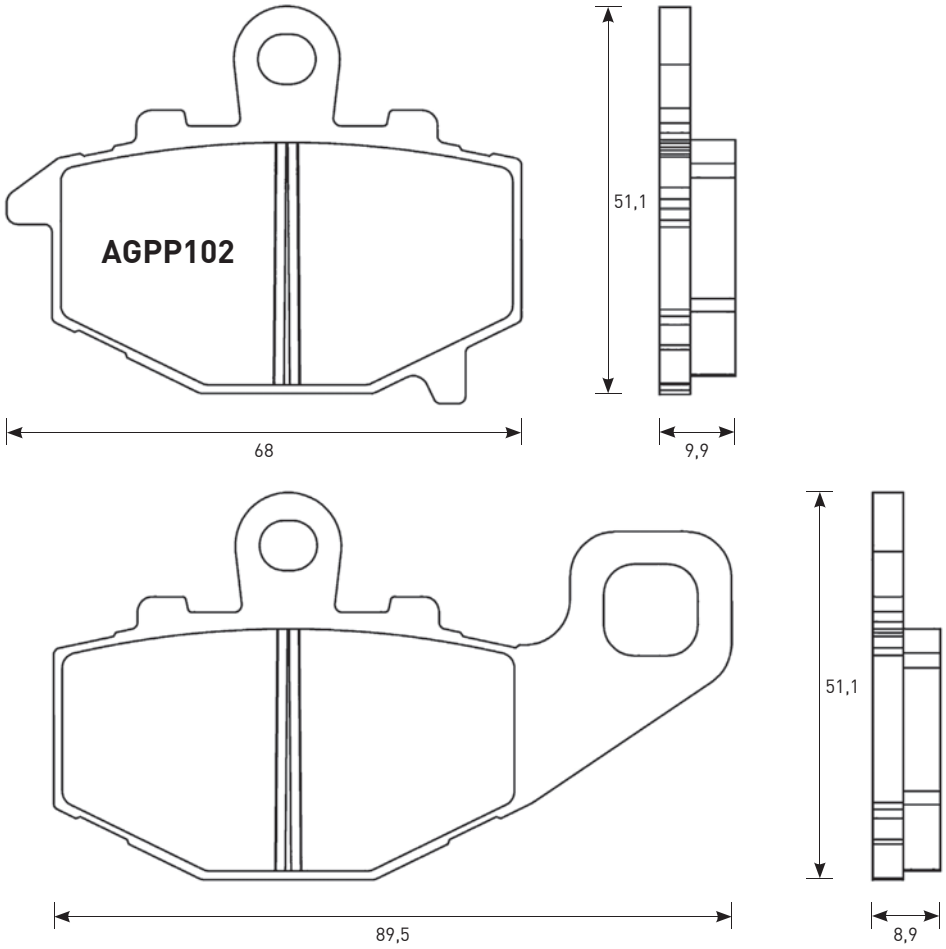

CROSS REFERENCE	
EBC	FA192
OGNIBENE	269
BRAKING	775
NEWFREN	.FD.0207
BREMBO	07KA16
FERODO	FDB2012
CL	2381
SBS	687

EQUIVALENT OE #	
OEM Kawasaki	43082 1190
OEM Kawasaki	43082 0068
OEM Kawasaki	43082 0004
OEM Kawasaki	43082 1213
OEM Kawasaki	43082 1157
OEM Kawasaki	43082 1171
OEM Kawasaki	43082 1160

AGPP102						
MARCA Brand	MODELLO Model	CC	DA From	A To	ANT. Front	POST. Rear
KAWASAKI	400 NINJA R LEFT/REAR	400	2011			X
KAWASAKI	ZZR 500 (AUSTRIA)	500	1993			X
KAWASAKI	ZR 550 B4-B6 ZEPHYR	550	1993	1999		X
KAWASAKI	ZR 550 ZEPHYR (GERMANY) FR.NO. B024010- 93- LS	550	1993			X
KAWASAKI	ZX-6R 600 E1-E5 (NINJA ZX6)	600	1993	1997		X
KAWASAKI	ZX-6R 600 F1-F3 (NINJA ZX6R)	600	1995	1997		X
KAWASAKI	ZX-6R 600 NINJA	600	1998	2001		X
KAWASAKI	ZX-6R 600 NINJA (RAD.CAL)	600	2007	2012		X

AGPP102						
MARCA Brand	MODELLO Model	CC	DA From	A To	ANT. Front	POST. Rear
KAWASAKI	ZX-6RR 600 NINJA (RAD.CAL)	600	2003	2006		X
KAWASAKI	ZZR 600	600	1993	2005		X
KAWASAKI	ZX-6R 636 NINJA	636	2002			X
KAWASAKI	ZX-6R 636 NINJA (RAD.CAL)	636	2003	2006		X
KAWASAKI	ER-6F 650 LEFT/REAR	650	2006	2012		X
KAWASAKI	ER-6N 650 LEFT/REAR	650	2006	2012		X
KAWASAKI	KLE 650 VERSYS LEFT/REAR	650	2007	2014		X
KAWASAKI	Z 750 LEFT/REAR	750	2004	2006		X
KAWASAKI	Z 750 S LEFT/REAR	750	2005	2006		X
KAWASAKI	ZX-9R 900 NINJA	900	1994	2002		X
KAWASAKI	Z 1000	1000	2003	2006		X
KAWASAKI	Z 1000 (RAD.CAL)	1000	2014			X
KAWASAKI	Z 1000 SE (RAD.CAL)	1000	2014			X
KAWASAKI	Z 1000 SX (RAD.CAL)	1000	2011	2014		X
KAWASAKI	ZX-10R 1000 NINJA (RAD.CAL)	1000	2004	2010		X
KAWASAKI	GPZ 1100 (ZX 1100 E1-E2) LEFT/REAR	1100	1995	1996		X
KAWASAKI	GPZ 1100 ABS, HORIZONT LEFT/REAR	1100	1997			X

PASTIGLIE BRAKE PADS

APPLICAZIONI PER CODICE PASTIGLIA / applications for pads code

MESCOLA ORGANICA E SINTERIZZATA organic and sintered compounds
OR / ST

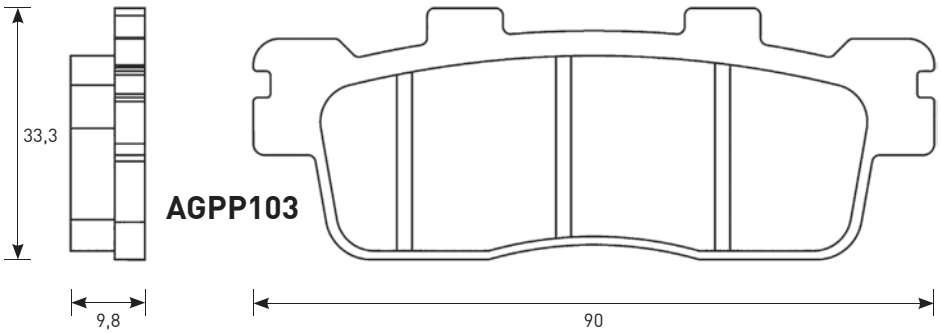

CROSS REFERENCE	
EBC	**FA498**
OGNIBENE	**177**
BRAKING	**945**
NEWFREN	**.FD.0460**
BREMBO	**7085**
FERODO	**FDB2248**
CL	**3094**
SBS	**204**

EQUIVALENT OE #	
OEM Kymco	**143071**

AGPP103						
MARCA Brand	**MODELLO** Model	**CC**	**DA** From	**A** To	**ANT.** Front	**POST.** Rear
KYMCO	**125 DOWNTOWN I**	**125**	**2010**			**X**
KYMCO	**125 PEOPLE GTI**	**125**	**2012**			**X**
KYMCO	**125 SUPER DINK**	**125**	**2010**			**X**
KYMCO	**200 DOWNTOWN I**	**200**	**2010**			**X**
KYMCO	**200 PEOPLE GTI**	**200**	**2012**			**X**
KYMCO	**300 DOWNTOWN I**	**300**	**2010**			**X**
KYMCO	**300 PEOPLE GTI**	**300**	**2012**			**X**

MESCOLA SINTERIZZATA E ZXC sintered and zxc compounds
ST / ZXC

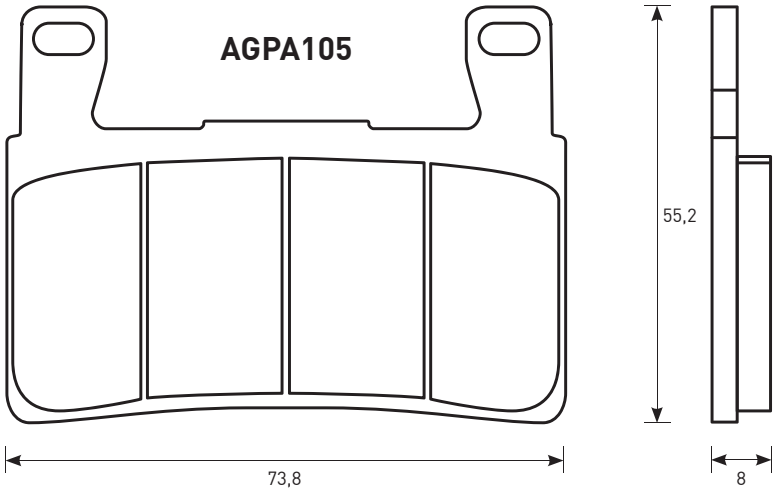

CROSS REFERENCE	
EBC	**FA265**
OGNIBENE	**245**
BRAKING	**827**
NEWFREN	**.FD.0300**
BREMBO	**07HO4507**
FERODO	**FDB2079**
CL	**2711**
SBS	**734**

EQUIVALENT OE #	
OEM Honda	**6455 MCF006**
OEM Honda	**6455 MCF016**
OEM Honda	**6435 MEJ006**
OEM Honda	**6435 MEJ016**
OEM Honda	**6455 MBW006**
OEM Honda	**6455 MBW E11**
OEM Honda	**6455 MBW E12**
OEM Honda	**6455 MAS E01**

AGPA105						
MARCA Brand	**MODELLO** Model	**CC**	**DA** From	**A** To	**ANT.** Front	**POST.** Rear
HONDA	**CB 600 HORNET (JAPAN)**	**600**	**1998**		**X**	
HONDA	**CBR 600 F4, F4 SPORT**	**600**	**1999**		**X**	
HONDA	**CBR 600 RR**	**600**	**2003**	**2004**	**X**	
HONDA	**CBR 900 RR FIREBLADE**	**900**	**1998**	**2003**	**X**	

AGPA105						
MARCA Brand	**MODELLO** Model	**CC**	**DA** From	**A** To	**ANT.** Front	**POST.** Rear
HONDA	**VTR 1000 SP-1, SP-2**	**1000**	**2000**		**X**	
HONDA	**CB 1100 , EX**	**1100**	**2014**		**X**	
HONDA	**CB 1300**	**1300**	**2005**		**X**	
HONDA	**CB 1300 R**	**1300**	**2002**	**2004**	**X**	
HYOSUNG	**GD 125 EXIV**	**125**	**2012**		**X**	
HYOSUNG	**GD 250 EXIV-R**	**250**	**2015**		**X**	
HYOSUNG	**GT 250 IR**	**250**	**2015**		**X**	
HYOSUNG	**GT 300 R**	**300**	**2016**		**X**	
HYOSUNG	**GV 300**	**300**	**2016**		**X**	
HYOSUNG	**GT 650 I**	**650**	**2013**		**X**	
HYOSUNG	**GT 650 I NAKED**	**650**	**2015**		**X**	
HYOSUNG	**GT 650 IR**	**650**	**2013**	**2015**	**X**	
HYOSUNG	**ST 700**	**700**	**2011**		**X**	
HYOSUNG	**ST 700 I DELUXE**	**700**	**2013**		**X**	

ACCOSSATO

PASTIGLIE BRAKE PADS

APPLICAZIONI PER CODICE PASTIGLIA / applications for pads code

MESCOLA ORGANICA, SINTERIZZATA, ZXC, EV1 E EV2 organic, sintered, zxc, ev1 and ev2 compounds
OR / ST / ZXC / EV1 / EV2

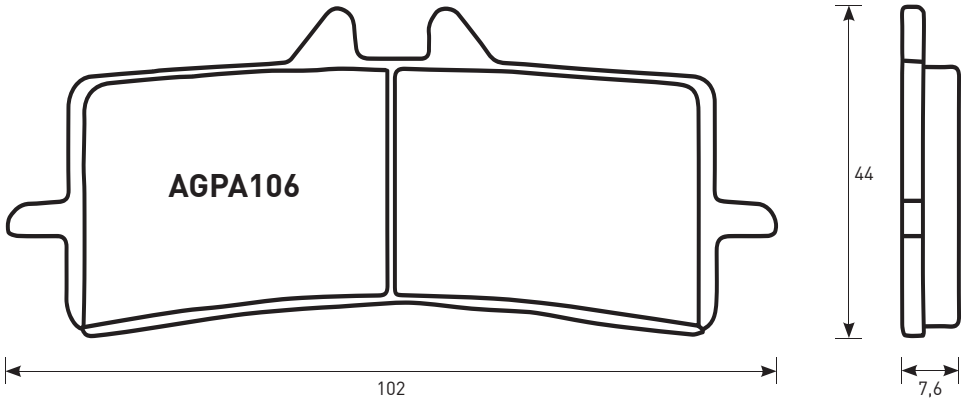

CROSS REFERENCE	
EBC	FA447
OGNIBENE	322
BRAKING	930
NEWFREN	.FD.0415
BREMBO	07BB3050
FERODO	FDB2218/FDB2260
CL	1185
SBS	841

EQUIVALENT OE #	
OEM Ducati	61340791A
OEM KTM	69013030000
OEM MV Agusta	8000 B1601

AGPA106						
MARCA Brand	MODELLO Model	CC	DA From	A To	ANT. Front	POST. Rear
APRILIA	RSV4 1000 , ABS	1000	2009		X	
APRILIA	RSV4-R 1000 , ABS	1000	2010		X	
BREMBO RACING CALIPERS	100 MM RADIAL CALIPER .484, 220B47310, P4 32					
BREMBO RACING CALIPERS	100 MM RADIAL MONOBLOCK 220988530, P4 34					
BREMBO RACING CALIPERS	108 MM RADIAL CALIPER .484, 220B47310, P4 32					
BREMBO RACING CALIPERS	108 MM RADIAL MONOBLOCK 220A39710, P4 34					
BREMBO RACING CALIPERS	RADIAL GP4 RX 220B01010					
DUCATI	848 EVO (RAD.CAL)	848	2011		X	
DUCATI	848 STREETFIGHTER S	848	2012		X	
DUCATI	D16RR 990 DESMOSEDICI RR	990	2007		X	
DUCATI	1098 (RAD. CAL)	1098	2007	2008	X	
DUCATI	1098 R (RAD.CAL)	1098	2008		X	
DUCATI	1098 R BAYLISS LE (RAD.CAL)	1098	2009		X	
DUCATI	1098 S (RAD. CAL)	1098	2007	2008	X	
DUCATI	1098 STREETFIGHTER (RAD.CAL)	1098	2009		X	
DUCATI	1098 STREETFIGHTER S (RAD.CAL)	1098	2009		X	
DUCATI	1100 HYPERMOTARD	1100	2007		X	
DUCATI	1100 HYPERMOTARD EVO SP	1100	2010		X	
DUCATI	1198 (RAD.CAL)	1198	2009		X	
DUCATI	1198 S (RAD.CAL)	1198	2009		X	

AGPA106						
MARCA Brand	MODELLO Model	CC	DA From	A To	ANT. Front	POST. Rear
DUCATI	1198 SP (RAD.CAL)	1198	2011		X	
DUCATI	1199 PANIGALE	1199	2012	2014	X	
DUCATI	1199 PANIGALE R	1199	2013		X	
DUCATI	1199 PANIGALE S	1199	2012	2014	X	
DUCATI	1199 SUPERLEGGERA	1199	2014		X	
DUCATI	1200 DIAVEL	1200	2011		X	
DUCATI	1200 DIAVEL STRADA	1200	2011		X	
DUCATI	1200 MONSTER S	1200	2014		X	
DUCATI	1200 MULTISTRADA S	1200	2015		X	
DUCATI	1200 MULTISTRADA S D-AIR	1200	2015		X	
DUCATI	1299 PANIGALE	1299	2015		X	
DUCATI	1299 PANIGALE S	1299	2015		X	
HUSQVARNA	FS 450	450	2015		X	
HUSQVARNA	900 NUDA R, ABS	900	2012		X	
KAWASAKI	1000 H2 NINJA	1000	2015		X	
KAWASAKI	1000 H2R NINJA	1000	2015		X	
KTM	SX 450 SMR	450	2013		X	
KTM	690 DUKE R	690	2014		X	
KTM	990 SUPERMOTO R	990	2010		X	
KTM	RC8 1190	1190	2008		X	
KTM	RC8 1190 R	1190	2009		X	
KTM	RC8 1190 R TRACK	1190	2011		X	
KTM	1290 SUPER DUKE R	1290	2014		X	
MV AGUSTA	675 F3	675	2015		X	
MV AGUSTA	800 F3	800	2014		X	
MV AGUSTA	1000 F4 R CORSA CORTA	1000	2012		X	
MV AGUSTA	1000 F4 RR CORSA CORTA	1000	2012		X	
MV AGUSTA	1078 BRUTALE RR	1078	2009		X	
MV AGUSTA	1078 F4 CC	1078	2008	2011	X	
MV AGUSTA	1078 F4 RR	1078	2008	2011	X	
MV AGUSTA	1090 BRUTALE CORSE	1090	2014		X	
MV AGUSTA	1090 BRUTALE RR	1090	2010		X	
SUZUKI	GSX-R 600 (RAD.CAL)	600	2011		X	
SUZUKI	GSX-R 750 (RAD.CAL)	750	2011		X	
SUZUKI	GSX-R 1000 (RAD.CAL)	1000	2012		X	
SUZUKI	GSX-S 1000	1000	2015		X	
SUZUKI	GSX-S 1000 F	1000	2015		X	
SUZUKI	GSX-R 1300 HAYABUSA (RAD.CAL)	1300	2013		X	

PASTIGLIE BRAKE PADS

APPLICAZIONI PER CODICE PASTIGLIA / applications for pads code

MESCOLA ORGANICA, SINTERIZZATA, E STMX organic, sintered and stmx compounds
OR / ST / STMX

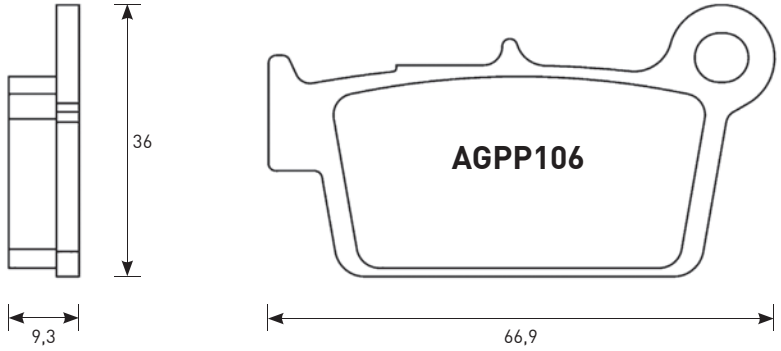

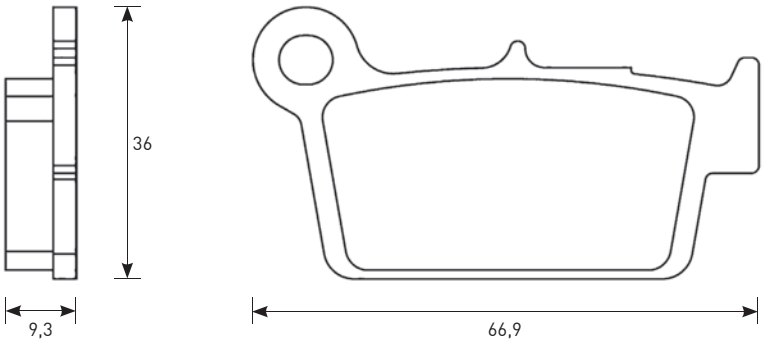

CROSS REFERENCE	
EBC	**FA367**
OGNIBENE	**296**
BRAKING	**890**
NEWFREN	**.FD.0349**
BREMBO	**07YA41**
FERODO	**FDB2162**
CL	**1103**
SBS	**790**

EQUIVALENT OE #	
OEM Aprilia	**9100797**
OEM Kawasaki	**43082 0090**
OEM Kawasaki	**43082 0006**
OEM Kawasaki	**43082 0048**
OEM Suzuki	**69100 36850**
OEM Suzuki	**69100 35810**
OEM Suzuki	**69101 44840**
OEM Yamaha	**5UN W0046 50**
OEM Yamaha	**5UN W0046 60**
OEM Yamaha	**1C3 W0046 50**
OEM Yamaha	**5UN W0046 00**
OEM Yamaha	**1C3 W0046 10**
OEM Yamaha	**1C3 W0046 B0**
OEM Yamaha	**1C3 W0046 80**
OEM Yamaha	**5UN W0046 51**

AGPP106						
MARCA Brand	**MODELLO** Model	**CC**	**DA** From	**A** To	**ANT.** Front	**POST.** Rear
APRILIA	**MXV 450**	**450**	**2009**			**X**
APRILIA	**RXV 450**	**450**	**2006**			**X**
APRILIA	**SXV 450**	**450**	**2006**			**X**
APRILIA	**SXV 450 Van den Bosh Rep.**	**450**	**2008**			**X**
APRILIA	**RXV 550**	**550**	**2006**			**X**
APRILIA	**SXV 550**	**550**	**2006**			**X**
APRILIA	**SXV 550 Van den Bosh Rep.**	**550**	**2008**			**X**
BETA	**RR 250**	**250**	**2005**			**X**
BETA	**300 Crosstrainer**	**300**	**2015**			**X**
BETA	**RR 300**	**300**	**2013**			**X**
BETA	**RR 350 Efi**	**350**	**2015**			**X**
BETA	**RR 350 Efi Racing**	**350**	**2015**			**X**

AGPP106						
MARCA Brand	**MODELLO** Model	**CC**	**DA** From	**A** To	**ANT.** Front	**POST.** Rear
BETA	**RR 350 Enduro**	**350**	**2012**	**2014**		**X**
BETA	**RR 390**	**390**	**2015**			**X**
BETA	**RR 400 Enduro**	**400**	**2005**			**X**
BETA	**RR 430**	**430**	**2015**			**X**
BETA	**RR 430 Racing**	**430**	**2015**			**X**
BETA	**RR 450 Cross Country**	**450**	**2012**			**X**
BETA	**RR 450 Enduro**	**450**	**2005**			**X**
BETA	**RR 480**	**480**	**2015**			**X**
BETA	**RR 480 Racing**	**480**	**2015**			**X**
BETA	**RR 498 Enduro**	**498**	**2012**			**X**
BETA	**RR 525 Enduro**	**525**	**2005**			**X**
BIMOTA	**BBX 300 Enduro**	**300**	**2012**			**X**
CCM	**450 MX**	**450**	**2008**			**X**
GAS GAS	**EC 250**	**250**	**2012**			**X**
GAS GAS	**EC 300**	**300**	**2012**			**X**
HM	**CRE 50 Six Comp. 07-**	**50**	**2012**			**X**
HM	**CRM 50 Derapage Comp.**	**50**	**2007**	**2012**		**X**
HM	**CRE 125 Six Comp. 10-**	**125**	**2011**			**X**
HM	**CRM 125 Derapage Comp. 2T**	**125**	**2011**	**1012**		**X**
HM	**CRM 125 Derapage Comp. 4T**	**125**	**2011**	**2012**		**X**
KAWASAKI	**KX-F 250**	**250**	**2004**	**2010**		**X**
KAWASAKI	**KX-F 250 DFI**	**250**	**2011**			**X**
KAWASAKI	**KLX 450 R**	**450**	**2007**			**X**
KAWASAKI	**KX-F 450**	**450**	**2006**	**2008**		**X**
KAWASAKI	**KX-F 450 DFI**	**450**	**2009**			**X**
SHERCO	**SE 250 2.5i Enduro**	**250**	**2006**	**2011**		**X**
SHERCO	**SX 250 2.5i-F**	**250**	**2009**	**2011**		**X**
SHERCO	**SE 300 3.0i-F**	**300**	**2010**	**2011**		**X**
SHERCO	**SE 450 4.5i Enduro**	**450**	**2005**	**2011**		**X**

PASTIGLIE BRAKE PADS

APPLICAZIONI PER CODICE PASTIGLIA / applications for pads code

AGPP106						
MARCA Brand	MODELLO Model	CC	DA From	A To	ANT. Front	POST. Rear
SHERCO	SM 450 4.5i Supermotard	450	2006			X
SHERCO	SE 510 5.1i Enduro	510	2006	2011		X
SUZUKI	RM-Z 250	250	2004	2006		X
SUZUKI	RM-Z 250	250	2007	2009		X
SUZUKI	RM-Z 250 Efi	250	2010			X
SUZUKI	RMX 450 Z Efi	450	2010			X
SUZUKI	RM-Z 450	450	2005	2007		X
SUZUKI	RM-Z 450 Efi	450	2008			X
TM	125	125	2005			X
TM	125 Enduro	125	2005			X
TM	250	250	2005			X
TM	250 Enduro	250	2005			X
TM	250 F	250	2005			X
TM	250 F Enduro	250	2005			X
TM	300	300	2005			X
TM	300 Enduro	300	2005			X
TM	450 F	450	2005			X
TM	450 F Enduro	450	2005			X
TM	530 F	530	2005			X
TM	530 F Enduro	530	2005			X
YAMAHA	YZ 125	125	2003	2007		X
YAMAHA	YZ 125	125	2008			X
YAMAHA	WR 250 F	250	2003	2013		X
YAMAHA	WR 250 F Efi	250	2015			X
YAMAHA	WR 250 R	250	2008			X

AGPP106						
MARCA Brand	MODELLO Model	CC	DA From	A To	ANT. Front	POST. Rear
YAMAHA	WR 250 X	250	2008			X
YAMAHA	YZ 250	250	2003	2007		X
YAMAHA	YZ 250 0	250	2008			X
YAMAHA	YZ 250 F	250	2003	2006		X
YAMAHA	YZ 250 F	250	2007	2009		X
YAMAHA	YZ 250 F	250	2013			X
YAMAHA	YZ 250 F	250	2014			X
YAMAHA	YZ 250 FX Efi	250	2015			X
YAMAHA	WR 450 F	450	2003	2015		X
YAMAHA	WR 450 F Efi	450	2016			X
YAMAHA	YZ 450 F	450	2003	2007		X
YAMAHA	YZ 450 F	450	2008	2009		X
YAMAHA	YZ 450 F Efi	450	2010			X
YAMAHA	YZ 450 F Efi	450	2014			X
YAMAHA	YZ 450 FX Efi	450	2016			X
ZERO	DS ZF11.4		2013			X
ZERO	DS ZF8.5		2013			X
ZERO	FX ZF2.8		2013			X
ZERO	FX ZF5.7		2013			X
ZERO	MX ZF2.8		2013			X
ZERO	MX ZF5.7		2013			X
ZERO	S ZF11.4		2013			X
ZERO	S ZF8.5 1		2013			X
ZERO	XU ZF2.8		2013			X
ZERO	XU ZF5.7		2013			X

MESCOLA SINTERIZZATA, ZXC, EV1 E EV2 sintered, zxc, ev1 and ev2 compounds
ST / ZXC / EV1 / EV2

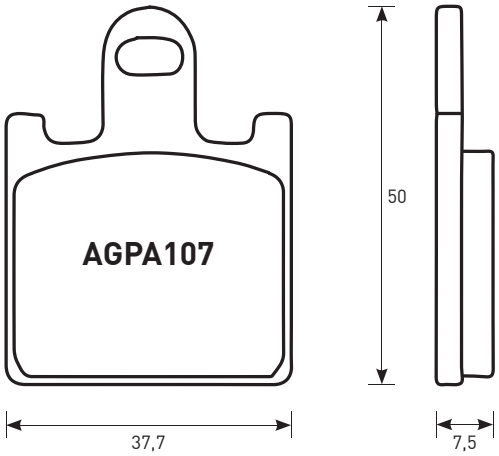

CROSS REFERENCE	
EBC	FA417/4
OGNIBENE	311
BRAKING	927
NEWFREN	.FD.0419
BREMBO	07KA28
FERODO	FDB2220
CL	1177
SBS	838

EQUIVALENT OE #	
OEM Kawasaki	43082 0071
OEM Kawasaki	43082 0053
OEM Kawasaki	43082 0104
OEM Kawasaki	43082 0072

AGPA107						
MARCA Brand	MODELLO Model	CC	DA From	A To	ANT. Front	POST. Rear
KAWASAKI	ZX-6R 600 NINJA (RAD.CAL)	600	2007	2012	X	
KAWASAKI	Z 750 R	750	2011		X	
KAWASAKI	Z 1000	1000	2007	2009	X	
KAWASAKI	GTR 1400 (RAD.CAL)	1400	2007		X	
KAWASAKI	ZZR 1400 (RAD.CAL)	1400	2006		X	
SUZUKI	GSX 1300 B KING	1300	2007		X	

PASTIGLIE BRAKE PADS

APPLICAZIONI PER CODICE PASTIGLIA / applications for pads code

MESCOLA ORGANICA E SINTERIZZATA organic and sintered compound
OR / ST

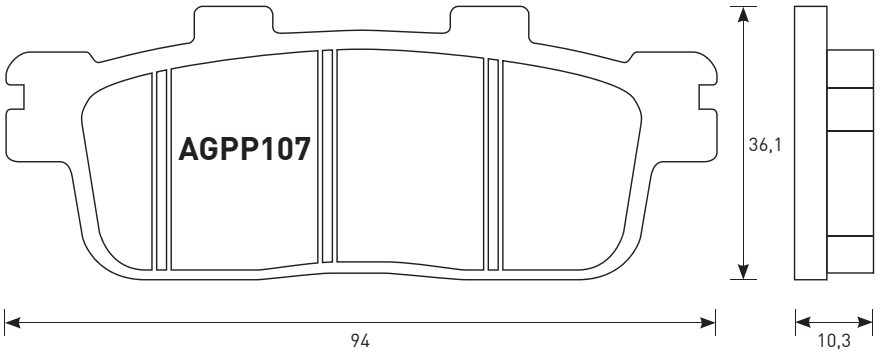

CROSS REFERENCE	
EBC	FA607
OGNIBENE	165
BRAKING	948/958
NEWFREN	.FD.0445
BREMBO	7069
FERODO	FDB2254
CL	3092
SBS	195/863

EQUIVALENT OE #	
OEM Kymco	43105-LDH-E00

AGPP107						
MARCA Brand	MODELLO Model	CC	DA From	A To	ANT. Front	POST. Rear
KYMCO	125 G-DINK	125	2012			X
KYMCO	125 K-XCTI	125	2014			X
KYMCO	S 125 PEOPLE	125	2005			X
KYMCO	S 200 PEOPLE	200	2005			X
KYMCO	250 XCITING	250	2006			X
KYMCO	S 250 PEOPLE LEFT/REAR	250	2006			X
KYMCO	300 G-DINK	300	2012			X
KYMCO	300 K-XCTI	300	2012			X
KYMCO	300 PEOPLE SI LEFT/REAR	300	2008			X
KYMCO	300 XCITING RI	300	2008			X

MESCOLA SINTERIZZATA, ZXC, EV1 E EV2 sintered, zxc, ev1 and ev2 compounds
ST / ZXC / EV1 / EV2

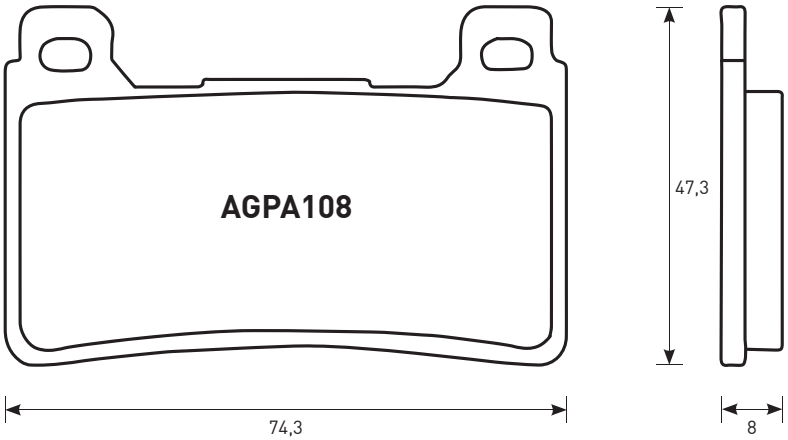

CROSS REFERENCE	
EBC	FA390
OGNIBENE	301
BRAKING	899
NEWFREN	.FD.0410
BREMBO	07HO50
FERODO	FDB2181/FDB2205
CL	1134
SBS	809

EQUIVALENT OE #	
OEM Honda	06455 MEL D22

AGPA108						
MARCA Brand	MODELLO Model	CC	DA From	A To	ANT. Front	POST. Rear
HONDA	CBR 600 RR (RAD.CAL)	600	2005	2007	X	
HONDA	CBR 600 RR (RAD.CAL) ABS	600	2009		X	
HONDA	VFR 800 F	800	2014		X	
HONDA	VFR 800 X CROSSRUNNER	800	2015		X	
HONDA	CB 1000 R (RAD.CAL)	1000	2008		X	
HONDA	CBR 1000 RR FIREBLADE (RAD.CAL)	1000	2004	2008	X	
HONDA	CBR 1000 RR FIREBLADE (RAD.CAL) ABS	1000	2009		X	

ACCOSSATO

PASTIGLIE BRAKE PADS

APPLICAZIONI PER CODICE PASTIGLIA / applications for pads code

MESCOLA SINTERIZZATA, ZXC, EV1 E EV2 sintered, zxc, ev1 and ev2 compounds
ST / ZXC / EV1 / EV2

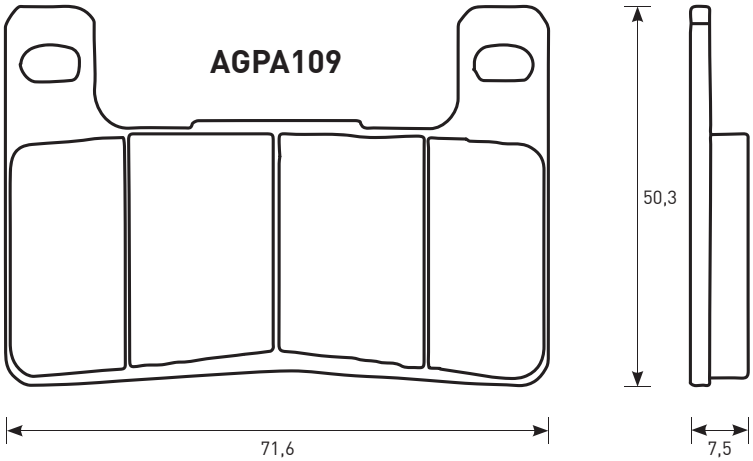

CROSS REFERENCE	
EBC	FA379
OGNIBENE	289
BRAKING	898
NEWFREN	.FD.0409
BREMBO	07SU27
FERODO	FDB2204
CL	1133
SBS	806

EQUIVALENT OE #	
OEM Kawasaki	43082 0091
OEM Suzuki	59100 47890
OEM Suzuki	59100 29820
OEM Suzuki	59100 29850

AGPA109						
MARCA Brand	MODELLO Model	CC	DA From	A To	ANT. Front	POST. Rear
KAWASAKI	Z 1000 (RAD.CAL)	1000	2010	2014	X	
KAWASAKI	Z 1000 SE (RAD.CAL)	1000	2014		X	
KAWASAKI	Z 1000 SX (RAD.CAL)	1000	2011	2014	X	
KAWASAKI	ZX-10R 1000 NINJA (RAD.CAL)	1000	2008	2011	X	
SUZUKI	GSX-R 600 (RAD.CAL)	600	2004	2010	X	
SUZUKI	GSX-R 750 (RAD.CAL)	750	2004	2010	X	
SUZUKI	DL 1000 V-STROM	1000	2014		X	
SUZUKI	GSX-R 1000 (RAD.CAL)	1000	2004	2011	X	
SUZUKI	GSX-R 1300 HAYABUSA	1300	2008	2012	X	
SUZUKI	M 1800 R INTRUDER	1800	2006		X	
SUZUKI	M 1800 R2 INTRUDER	1800	2008		X	

MESCOLA ORGANICA E SINTERIZZATA organic and sintered compounds
OR / ST

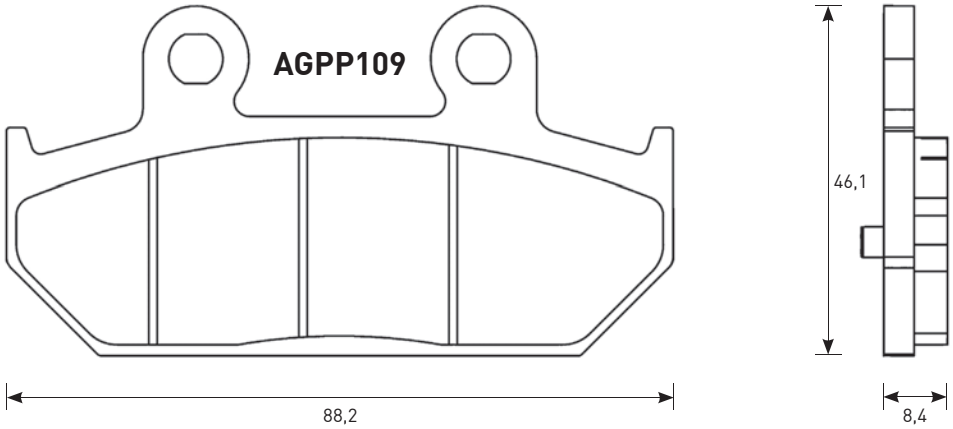

CROSS REFERENCE	
EBC	FA412
OGNIBENE	294
BRAKING	896
NEWFREN	.FD.0356
BREMBO	7058
FERODO	FDB2132
CL	3074
SBS	182

EQUIVALENT OE #	
6910010840	6910010860

AGPP109						
MARCA Brand	MODELLO Model	CC	DA From	A To	ANT. Front	POST. Rear
SUZUKI	AN 400 BURGMAN LEFT/REAR	400	2007	2009		X
SUZUKI	AN 650 A BURGMAN EXECUTIVE	650	2004	2012		X
SUZUKI	AN 650 BURGMAN	650	2002			X
SUZUKI	AN 650 Z BURGMAN EXECUTIVE	650	2013			X

PASTIGLIE BRAKE PADS

APPLICAZIONI PER CODICE PASTIGLIA / applications for pads code

MESCOLA ORGANICA, SINTERIZZATA E STMX organic, sintered and stmx compounds
OR / ST / STMX

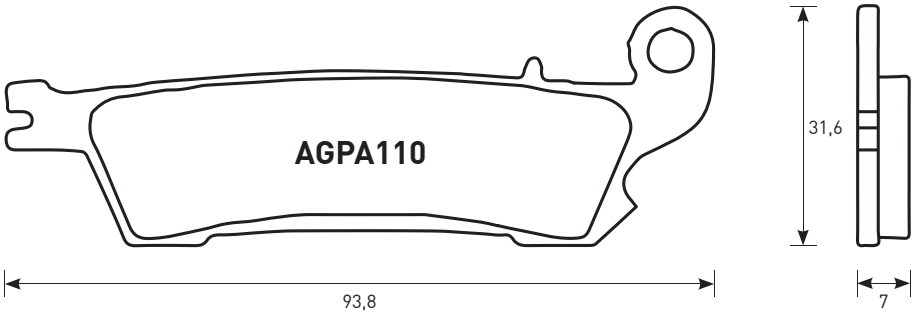

CROSS REFERENCE	
EBC	FA450
OGNIBENE	318
BRAKING	929
NEWFREN	.FD.0411
BREMBO	07YA47
FERODO	FDB2219
CL	1183
SBS	840

EQUIVALENT OE #	
OEM Yamaha	5XC W0045 00

AGPA110						
MARCA Brand	MODELLO Model	CC	DA From	A To	ANT. Front	POST. Rear
YAMAHA	YZ 125	125	2008		X	
YAMAHA	YZ 250	250	2008		X	
YAMAHA	YZ 250 F	250	2007	2013	X	
YAMAHA	YZ 250 F EFI	250	2014		X	
YAMAHA	YZ 250 FX EFI	250	2015		X	
YAMAHA	YZ 450 F	450	2008	2009	X	
YAMAHA	YZ 450 F EFI	450	2010	2014	X	

MESCOLA ORGANICA E SINTERIZZATA organic and sintered compound
OR / ST

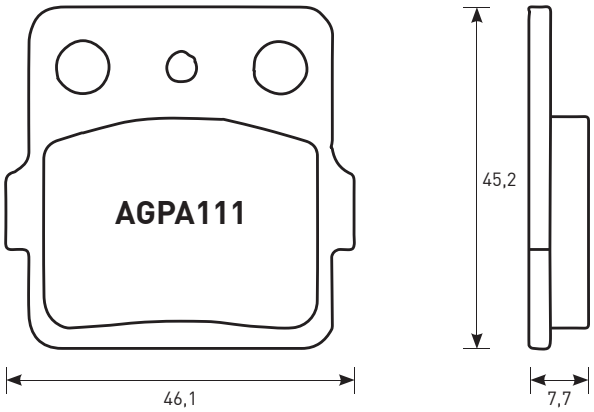

CROSS REFERENCE	
EBC	FA084
BRAKING	686
NEWFREN	.FD.0078
BREMBO	07HO2002
FERODO	FDB381
CL	2328
SBS	592

EQUIVALENT OE #	
OEM Kawasaki	K43082 1241
OEM Kawasaki	43082 1066
OEM Kawasaki	43082 1241
OEM Kawasaki	43082 0043
OEM Kawasaki	43082 1205
OEM Kawasaki	43082 1082

AGPA111						
MARCA Brand	MODELLO Model	CC	DA From	A To	ANT. Front	POST. Rear
ARCTIC CAT	400 DVX	400	2004		X	
HONDA	CR 85 R, R EXPERT	85	2003		X	
HONDA	CRF 150 R	150	2007		X	
HONDA	ATC 200 X	200	1983	1985	X	
HONDA	TRX 250 EX SPORTRAX	250	2001	2008	X	
HONDA	TRX 250 X	250	2008		X	

AGPA111						
MARCA Brand	MODELLO Model	CC	DA From	A To	ANT. Front	POST. Rear
HONDA	TRX 300 EX SPORTRAX	300	2001	2008	X	X
HONDA	TRX 300 X	300	2009		X	X
HONDA	TRX 400 EX SPORTRAX	400	2001	2008	X	X
HONDA	TRX 400 FOURTRAX EX	400	1999		X	X
HONDA	TRX 400 X	400	2009		X	X
HONDA	TRX 420 FA / FPA	420	2009		X	
HONDA	TRX 420 FPE / FPM 4X4	420	2009		X	
HONDA	TRX 450 EX SPORTRAX	450	2001		X	X
KAWASAKI	KX 65	65	2000			X
KAWASAKI	KX 80 L,N,R-R6	80	1988	1996		X
KAWASAKI	KX 80 R7, T7, W1, Y1, W2, Y2	80	1997	2000		X
KAWASAKI	KX 85	85	2001	2014		X
KAWASAKI	KX 85 II	85	2001	2013		X
KAWASAKI	KX 100	100	1988	1992		X
KAWASAKI	KX 100	100	1997	2014		X
KAWASAKI	KX 100 B5-B6	100	1995	1996		X
KAWASAKI	KLX 140 , L	140	2008			X
KAWASAKI	KSF 250 A1-A17 MOJAVE	250	1987			X
KAWASAKI	KXF 250 A1, A2 TECATE	250	1987	1988		X
KAWASAKI	KXT 250 B2 TECATE	250	1987			X
KAWASAKI	KEF 300 LAKOTA	300	1995			X
KAWASAKI	KFX 400	400	2002		X	
KAWASAKI	KFX 450 LEFT/REAR	450	2007			X
SUZUKI	RM 65	65	2003			X
SUZUKI	RM 100	100	2003			X
SUZUKI	LT 230 EH-EP	230	1986	1993		X
SUZUKI	LT 250 SK, SL	250	1989	1990		X
SUZUKI	LT-Z 400 QUAD SPORT	400	2002		X	
SUZUKI	RM 500 H	500	1987			X
SUZUKI	DR-Z 800	800	1988	1990		X
TM	80 JUNIOR	80	1996	2000		X
YAMAHA	YZ 80 E,F,G,H1,J1	80	1993	2001		X
YAMAHA	YZ 85 , LW	85	2002			X

ACCOSSATO

PASTIGLIE BRAKE PADS

APPLICAZIONI PER CODICE PASTIGLIA / applications for pads code

AGPA111						
MARCA Brand	MODELLO Model	CC	DA From	A To	ANT. Front	POST. Rear
YAMAHA	YFS 200 R BLASTER	200	2003	2006		X
YAMAHA	YFM 250 RAPTOR LEFT/REAR	250	2009			X
YAMAHA	YFM 350 FXG-FXM WOLVERINE	350	1995			X
YAMAHA	YFM 350 R RAPTOR	350	2004		X	
YAMAHA	YFM 350 XG,XH WARRIOR	350	1995	1996		X
YAMAHA	YFM 350 XT, XU WARRIOR	350	1987	1988		X

AGPA111						
MARCA Brand	MODELLO Model	CC	DA From	A To	ANT. Front	POST. Rear
YAMAHA	YFZ 350 A-M BANSHEE	350	1990	2006		X
YAMAHA	YFZ 350 T-W BANSHEE	350	1987	1989		X
YAMAHA	YFZ 450 S LEFT/REAR	450	2004	2005		X
YAMAHA	YFM 600 FWAK-FWAN 4X4 GRIZZLY	600	1998	2001	X	
YAMAHA	YFM 660 FWAP 4X4 GRIZZLY	660	2002		X	
YAMAHA	YFM 660 RN RAPTOR	660	2001		X	X

MESCOLA ORGANICA, SINTERIZZATA, ZXC, EV1 E EV2
organic, sintered, zxc, ev1 and ev2 compounds

OR / ST / ZXC / EV1 / EV2

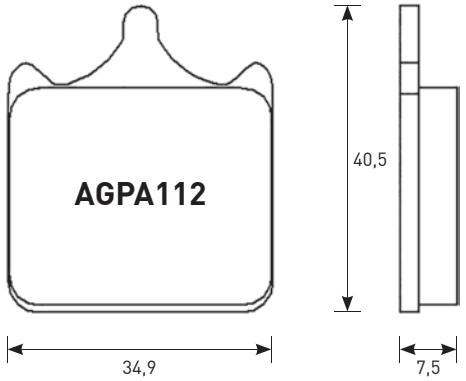

CROSS REFERENCE	
EBC	FA322
OGNIBENE	290
BRAKING	870
NEWFREN	.FD.0413
BREMBO	07BB0510
FERODO	FDB2120
CL	1033
SBS	762

EQUIVALENT OE #	
OEM Aprilia	8133886
OEM Aprilia	8113972
OEM Aprilia	8133592
OEM Benelli	R180263110000
OEM Benelli	R180400126000
OEM Cagiva	8000 A6416
OEM Cagiva	8000 A7417
OEM Ducati	61340301A
OEM KTM	61013030100
OEM KTM	61013030000
OEM KTM	61013019000

AGPA112						
MARCA Brand	MODELLO Model	CC	DA From	A To	ANT. Front	POST. Rear
APRILIA	RSV 1000 FACTORY PISTA (RAD.CAL)	1000	2004		X	
APRILIA	RSV 1000 MILLE	1000	2002		X	
APRILIA	RSV 1000 MILLE NERA (RAD.CAL)	1000	2004		X	
APRILIA	RSV 1000 MILLE R	1000	2001	2002	X	
APRILIA	RSV 1000 MILLE R	1000	2004		X	
APRILIA	RSV 1000 MILLE R (RAD.CAL)	1000	2003		X	
APRILIA	RSV 1000 MILLE R (RAD.CAL)	1000	2005		X	
APRILIA	RSV 1000 MILLE R FACTORY (RAD.CAL)	1000	2004		X	
APRILIA	RSV 1000 TUONO R	1000	2003		X	
APRILIA	RSV 1000 TUONO R FACTORY, ABS	1000	2006		X	

AGPA112						
MARCA Brand	MODELLO Model	CC	DA From	A To	ANT. Front	POST. Rear
BENELLI	BX 449 SUPERMOTARD	449	2008		X	
BENELLI	BN 600	600	2014		X	
BENELLI	BN 600 GT	600	2014		X	
BENELLI	756 CUE	756	2007	2009	X	
BENELLI	TNT 899 CENTURY RACER	899	2011		X	
BENELLI	900 TORNADO TRE	900	2003		X	
BENELLI	900 TORNADO TRE RS (RAD.CAL)	900	2004		X	
BENELLI	TNT 1130 CAFE RACER	1130	2005		X	
BENELLI	TNT 1130 CENTURY RACER	1130	2011		X	
BENELLI	TNT 1130 OFFICINE	1130	2007		X	
BENELLI	TNT 1130 SPORT	1130	2005		X	
BENELLI	TNT 1130 TITANIUM	1130	2005		X	
BIMOTA	DB5 1000 MILLE (RAD.CAL)	1000	2005	2011	X	
BIMOTA	DB5 1000 S (RAD.CAL)	1000	2007	2011	X	
BIMOTA	DB6 1000 DELIRIO (RAD.CAL)	1000	2007		X	
BIMOTA	SB8K 1000 SANTAMONICA	1000	2007		X	
BIMOTA	DB10 1078 BIMOTARD	1078	2012		X	
BIMOTA	DB5 1078 RE	1078	2012		X	
BIMOTA	DB7 1098 (RAD.CAL)	1098	2008		X	
BIMOTA	3D 1100 TESI (RAD.CAL)	1100	2007		X	
BIMOTA	DB6R 1100 DELIRIO (RAD.CAL)	1100	2008		X	
BIMOTA	DB12 1200	1200	2012		X	
BIMOTA	DB9 1200 BRIVIDO	1200	2012		X	
BMW	G 450 SMR	450	2009		X	
BREMBO RACING CALIPERS	GOLDLINE 4 PAD 20.7850.11/21, ROAD					
BREMBO RACING CALIPERS	MOTARD AXIAL XA32950, P4 34				X	
CAGIVA	1000 X3 RAPTOR	1000	2004		X	
CAGIVA	1000 X-RAPTOR	1000	2003		X	
DERBI	659 MULHACEN	659	2006	2007	X	
DERBI	659 MULHACEN CAFE	659	2008		X	
DUCATI	748 R	748	2001	2002	X	
DUCATI	749 , S	749	2003		X	
DUCATI	749 R (RAD.CAL)	749	2004		X	
DUCATI	996 R	996	2001		X	
DUCATI	998 MONSTER S4RS	998	2006		X	
DUCATI	998 R	998	2002		X	
DUCATI	999 , S	999	2003		X	
DUCATI	999 MONSTER S4R	999	2007		X	
DUCATI	999 MONSTER S4RS	999	2007		X	
DUCATI	999 R (RAD.CAL)	999	2003		X	
DUCATI	1000 HYPERMOTARD	1000	2006		X	
GILERA	600 SUPERSPORT	600	2002		X	

PASTIGLIE BRAKE PADS

APPLICAZIONI PER CODICE PASTIGLIA / applications for pads code

AGPA112						
MARCA Brand	**MODELLO** Model	**CC**	**DA** From	**A** To	**ANT.** Front	**POST.** Rear
HUSQVARNA	SMR 449	449	2011		X	
HUSQVARNA	SM 450 R	450	2005	2009	X	
HUSQVARNA	SM 450 RR	450	2006		X	
HUSQVARNA	SM 510 CENTENNIAL	510	2006		X	
HUSQVARNA	SM 510 R	510	2005	2006	X	
HUSQVARNA	SMR 511	511	2011		X	
HUSQVARNA	SM 610 IE	610	2007		X	
HUSQVARNA	SM 630	630	2010		X	
HUSQVARNA	STR 650 CRC	650	2007		X	
HUSQVARNA	SM 701	701	2015		X	
HYOSUNG	RX 450 SM	450	2008		X	
KTM	690 DUKE	690	2008	2011	X	
KTM	690 DUKE R	690	2010	2011	X	
KTM	690 SM	690	2007		X	
KTM	690 SMC	690	2008		X	
KTM	690 SUPERMOTO R	690	2008		X	
KTM	950 SM	950	2005		X	
KTM	950 SM R	950	2007		X	
KTM	990 SUPER DUKE	990	2004		X	
KTM	990 SUPER DUKE R	990	2009		X	
KTM	990 SUPERMOTO	990	2007		X	
KTM	990 SUPERMOTO T	990	2009		X	

AGPA112						
MARCA Brand	**MODELLO** Model	**CC**	**DA** From	**A** To	**ANT.** Front	**POST.** Rear
LAVERDA	SFC 1000 (RAD.CAL)	1000	2004		X	
MONDIAL	1000 EVO (RAD.CAL)	1000	2004		X	
MONDIAL	1000 PIEGA	1000	2003		X	
MONDIAL	1000 RZ NUDA	1000	2004		X	
MONDIAL	1000 STARFIGHTER (RAD.CAL)	1000	2004		X	
MOTO GUZZI	1200 MGS-01 CORSA (RAD.CAL) 05- HS	1200	2005		X	
MOTO MORINI	1200 GRANFERRO	1200	2010		X	
MV AGUSTA	1000 F4 R	1000	2006	2007	X	
NORTON	961 COMMANDO CAFE RACER	961	2011		X	
NORTON	961 COMMANDO SE	961	2012		X	
NORTON	961 COMMANDO SF	961	2013		X	
SHERCO	SM 450 4.5I SUPERMOTARD	450	2006		X	
SWM	SM 450 R	450	2015		X	
SWM	650 SUPERDUAL	650	2015		X	
TM	SMX 450 F	450	2004		X	
TM	SMX 660 F	660	2004		X	
TRIUMPH	1050 SPEED TRIPLE (RAD.CAL)	1050	2008		X	

MESCOLA ORGANICA E SINTERIZZATA organic and sintered compound
OR / ST

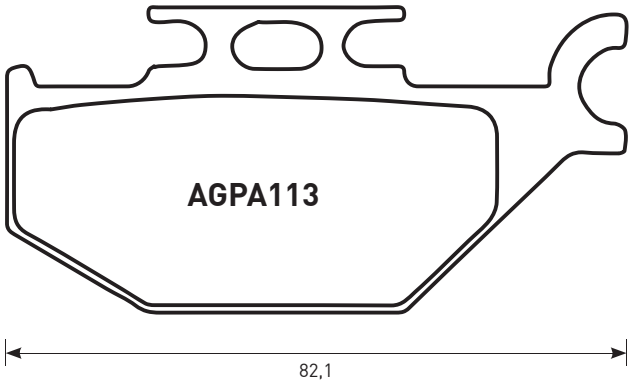

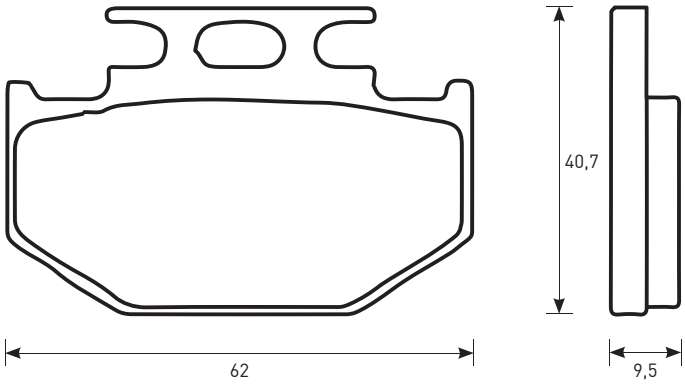

CROSS REFERENCE	
EBC	**FA307**
OGNIBENE	**291**
BRAKING	**862**
NEWFREN	**.FD.0301**
BREMBO	**07GR49**
FERODO	**FDB2148**
CL	**2923**
SBS	**754**

EQUIVALENT OE #	
/	**/**

AGPA113						
MARCA Brand	**MODELLO** Model	**CC**	**DA** From	**A** To	**ANT.** Front	**POST.** Rear
BOMBARDIER	DS 250 LEFT/REAR	250	2006		X	X
BOMBARDIER	330 OUTLANDER LEFT/REAR	330	2003	2006	X	X
BOMBARDIER	400 OUTLANDER LEFT/REAR	400	2003	2006	X	X
BOMBARDIER	400 OUTLANDER MAX LEFT/REAR	400	2003	2006	X	X
BOMBARDIER	500 QUEST LEFT/REAR	500	2002	2006	X	X
BOMBARDIER	500 TRAXTER 4X4 LEFT/REAR	500	2001	2006	X	

AGPA113						
MARCA Brand	**MODELLO** Model	**CC**	**DA** From	**A** To	**ANT.** Front	**POST.** Rear
BOMBARDIER	500 TRAXTER MAX LEFT/REAR	500	2003	2005	X	
BOMBARDIER	650 QUEST LEFT/REAR	650	2002	2006	X	X
BOMBARDIER	650 QUEST MAX LEFT/REAR	650	2003	2006	X	
BOMBARDIER	650 TRAXTER MAX LEFT/REAR	650	2003	2005	X	
BOMBARDIER	DS 650 LEFT/REAR	650	2001	2006	X	X
BOMBARDIER	800 OUTLANDER LEFT/REAR	800	2006		X	X
BOMBARDIER	800 OUTLANDER XT LEFT/REAR	800	2006		X	X
CAN-AM	400 OUTLANDER EFI LEFT/REAR	400	2009		X	
CAN-AM	400 OUTLANDER MAX STD LEFT/REAR	400	2007		X	
CAN-AM	400 OUTLANDER MAX XT LEFT/REAR	400	2007		X	

ACCOSSATO

PASTIGLIE BRAKE PADS

APPLICAZIONI PER CODICE PASTIGLIA / applications for pads code

AGPA113						
MARCA Brand	MODELLO Model	CC	DA From	A To	ANT. Front	POST. Rear
CAN-AM	400 OUTLANDER STD LEFT/REAR	400	2007		X	
CAN-AM	400 OUTLANDER XT LEFT/REAR	400	2007		X	
CAN-AM	500 OUTLANDER MAX STD LEFT/REAR	500	2007	2012	X	
CAN-AM	500 OUTLANDER MAX XT LEFT/REAR	500	2007	2012	X	
CAN-AM	500 OUTLANDER STD LEFT/REAR	500	2007	2012	X	
CAN-AM	500 OUTLANDER XT LEFT/REAR	500	2007	2012	X	
CAN-AM	500 RENEGADE LEFT/REAR	500	2008	2011	X	
CAN-AM	650 OUTLANDER MAX STD LEFT/REAR	650	2007	2012	X	
CAN-AM	650 OUTLANDER MAX XT LEFT/REAR	650	2007	2012	X	
CAN-AM	650 OUTLANDER STD LEFT/REAR	650	2007	2012	X	
CAN-AM	650 OUTLANDER XT LEFT/REAR	650	2007	2012	X	
CAN-AM	800 OUTLANDER MAX LTD LEFT/REAR	800	2007	2011	X	
CAN-AM	800 OUTLANDER MAX XT LEFT/REAR	800	2007	2011	X	
CAN-AM	800 OUTLANDER STD LEFT/REAR	800	2007	2011	X	
CAN-AM	800 OUTLANDER XT LEFT/REAR	800	2007	2011	X	
CAN-AM	800 RENEGADE EFI LEFT/REAR	800	2007	2011	X	

AGPA113						
MARCA Brand	MODELLO Model	CC	DA From	A To	ANT. Front	POST. Rear
CAN-AM	800 RENEGADE LEFT/REAR	800	2008	2011	X	
CAN-AM	800 RENEGADE X LEFT/REAR	800	2008	2011	X	
CAN-AM	1000 COMMANDER MAX LEFT	1000	2014			X
CAN-AM	1000 MAVERICK LEFT	1000	2013			X
CANNONDALE	440 BLAZE LEFT/REAR	440	2003		X	X
CANNONDALE	440 CANNIBAL LEFT/REAR	440	2003		X	X
CANNONDALE	440 GLAMIS LEFT/REAR	440	2003		X	X
CANNONDALE	440 MOTO LEFT/REAR	440	2003		X	X
CANNONDALE	440 SPEED LEFT/REAR	440	2003		X	X
JOHN DEERE	500 BUCK EX, EXT LEFT/REAR	500	2005		X	
JOHN DEERE	500 BUCK LEFT/REAR	500	2005		X	
JOHN DEERE	500 TRAIL BUCK LEFT/REAR	500	2005		X	
JOHN DEERE	650 TRAIL BUCK EX, EXT LEFT/REAR	650	2005		X	
JOHN DEERE	650 TRAIL BUCK LEFT/REAR	650	2005		X	
YAMAHA	YFM 400 FAM KODIAK	400	2000			X
YAMAHA	YFM 400 FWN BIG BEAR 4WD	400	2000			X
YAMAHA	YFM 400 FWNH BIG BEAR-BUCKMASTER 4WD	400	2000			X
YAMAHA	YFM 400 N BIG BEAR 2WD	400	2000			X
YAMAHA	YFM 450 FA_ KODIAK	450	2003			X
YAMAHA	YFM 450 WOLVERINE	450	2006			X

MESCOLA ORGANICA E SINTERIZZATA organic and sintered compounds
OR / ST

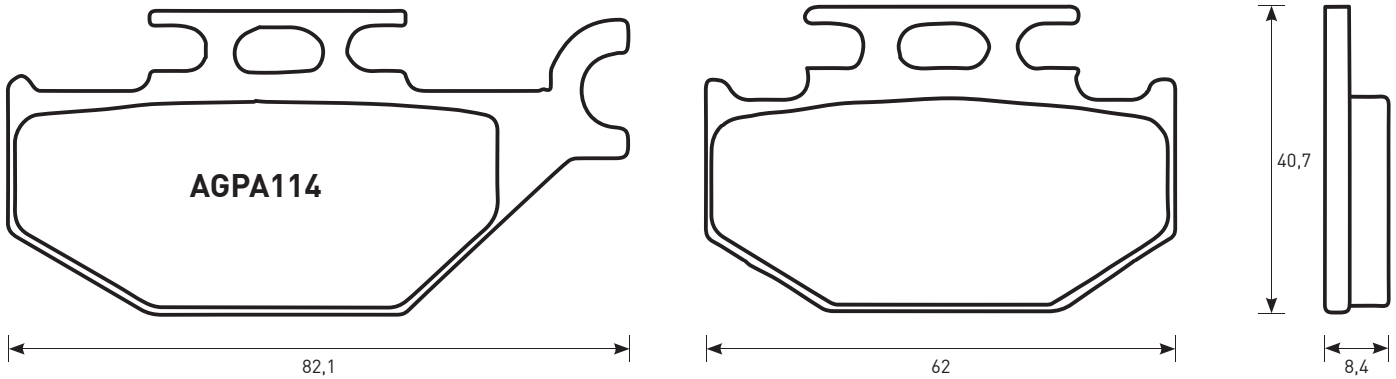

CROSS REFERENCE	
EBC	FA413
BRAKING	935
BREMBO	07GR49
FERODO	FDB2148
CL	2923
SBS	835

EQUIVALENT OE #	
OEM Suzuki	59100 31860
OEM Suzuki	69100 03890
OEM Suzuki	69101 03810
OEM Suzuki	59100 09870

AGPA114						
MARCA Brand	MODELLO Model	CC	DA From	A To	ANT. Front	POST. Rear
SUZUKI	KLT-A 400 KING QUAD LEFT	400	2008		X	
SUZUKI	KLT-F 400 KING QUAD LEFT	400	2008		X	
SUZUKI	LT-A 400 KING QUAD LEFT	400	2008		X	
SUZUKI	LT-F 400 KING QUAD LEFT	400	2008		X	
SUZUKI	LT-A 450 KING QUAD LEFT	450	2008		X	
SUZUKI	LT-A 500 KING QUAD LEFT	500	2011		X	
SUZUKI	LT-A 700 KING QUAD LEFT	700	2005		X	
SUZUKI	LT-A 750 KING QUAD LEFT	750	2008		X	

PASTIGLIE BRAKE PADS

APPLICAZIONI PER CODICE PASTIGLIA / applications for pads code

MESCOLA ORGANICA E SINTERIZZATA organic and sintered compounds
OR / ST

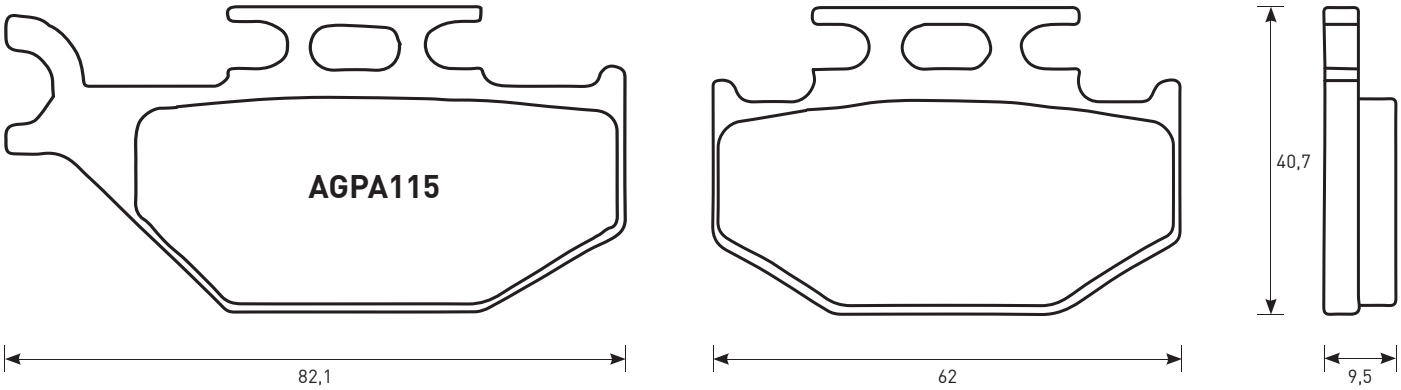

CROSS REFERENCE	
EBC	**FA317**
NEWFREN	**.FD.0318**
BREMBO	**07GR50**
FERODO	**FDB2149**
CL	**1102**
SBS	**767**

EQUIVALENT OE #	
/	**/**

AGPA115						
MARCA Brand	**MODELLO** Model	**CC**	**DA** From	**A** To	**ANT.** Front	**POST.** Rear
BOMBARDIER	**DS 250 RIGHT**	**250**	**2006**		**X**	
BOMBARDIER	**330 OUTLANDER RIGHT**	**330**	**2003**	**2006**	**X**	
BOMBARDIER	**400 OUTLANDER MAX RIGHT**	**400**	**2003**	**2006**	**X**	
BOMBARDIER	**400 OUTLANDER RIGHT**	**400**	**2003**	**2006**	**X**	
BOMBARDIER	**500 QUEST RIGHT**	**500**	**2002**	**2006**	**X**	
BOMBARDIER	**500 TRAXTER 4X4 LEFT/REAR**	**500**	**2001**	**2006**		**X**
BOMBARDIER	**500 TRAXTER 4X4 RIGHT**	**500**	**2001**	**2006**	**X**	
BOMBARDIER	**500 TRAXTER MAX LEFT/REAR**	**500**	**2003**	**2005**		**X**
BOMBARDIER	**500 TRAXTER MAX RIGHT**	**500**	**2003**	**2005**	**X**	
BOMBARDIER	**650 QUEST MAX LEFT/REAR**	**650**	**2003**	**2006**		**X**
BOMBARDIER	**650 QUEST MAX RIGHT**	**650**	**2003**	**2006**	**X**	
BOMBARDIER	**650 QUEST RIGHT**	**650**	**2002**	**2006**	**X**	
BOMBARDIER	**650 TRAXTER MAX LEFT/REAR**	**650**	**2003**	**2005**		**X**
BOMBARDIER	**650 TRAXTER MAX RIGHT**	**650**	**2003**	**2005**	**X**	
BOMBARDIER	**DS 650 RIGHT**	**650**	**2001**	**2006**	**X**	
BOMBARDIER	**800 OUTLANDER RIGHT**	**800**	**2006**		**X**	
BOMBARDIER	**800 OUTLANDER XT RIGHT**	**800**	**2006**		**X**	
CAN-AM	**400 OUTLANDER EFI LEFT/REAR**	**400**	**2009**			**X**
CAN-AM	**400 OUTLANDER EFI RIGHT**	**400**	**2009**		**X**	
CAN-AM	**400 OUTLANDER MAX STD LEFT/REAR**	**400**	**2007**			**X**
CAN-AM	**400 OUTLANDER MAX STD RIGHT**	**400**	**2007**		**X**	
CAN-AM	**400 OUTLANDER MAX XT LEFT/REAR**	**400**	**2007**			**X**
CAN-AM	**400 OUTLANDER MAX XT RIGHT**	**400**	**2007**		**X**	
CAN-AM	**400 OUTLANDER STD LEFT/REAR**	**400**	**2007**			**X**
CAN-AM	**400 OUTLANDER STD RIGHT**	**400**	**2007**		**X**	
CAN-AM	**400 OUTLANDER XT LEFT/REAR**	**400**	**2007**			**X**

AGPA115						
MARCA Brand	**MODELLO** Model	**CC**	**DA** From	**A** To	**ANT.** Front	**POST.** Rear
CAN-AM	**400 OUTLANDER XT RIGHT**	**400**	**2007**		**X**	
CAN-AM	**500 OUTLANDER MAX STD LEFT/REAR**	**500**	**2007**	**2012**		**X**
CAN-AM	**500 OUTLANDER MAX STD RIGHT**	**500**	**2007**	**2012**	**X**	
CAN-AM	**500 OUTLANDER MAX XT LEFT/REAR**	**500**	**2007**	**2012**		**X**
CAN-AM	**500 OUTLANDER MAX XT RIGHT**	**500**	**2007**	**2012**	**X**	
CAN-AM	**500 OUTLANDER STD LEFT/REAR**	**500**	**2007**	**2012**		**X**
CAN-AM	**500 OUTLANDER STD RIGHT**	**500**	**2007**	**2012**	**X**	
CAN-AM	**500 OUTLANDER XT LEFT/REAR**	**500**	**2007**	**2012**		**X**
CAN-AM	**500 OUTLANDER XT RIGHT**	**500**	**2007**	**2012**	**X**	
CAN-AM	**500 RENEGADE LEFT/REAR**	**500**	**2008**	**2011**		**X**
CAN-AM	**500 RENEGADE RIGHT**	**500**	**2008**	**2011**	**X**	
CAN-AM	**650 OUTLANDER MAX STD LEFT/REAR**	**650**	**2007**	**2012**		**X**
CAN-AM	**650 OUTLANDER MAX STD RIGHT**	**650**	**2007**	**2012**	**X**	
CAN-AM	**650 OUTLANDER MAX XT LEFT/REAR**	**650**	**2007**	**2012**		**X**
CAN-AM	**650 OUTLANDER MAX XT RIGHT**	**650**	**2007**	**2012**	**X**	
CAN-AM	**650 OUTLANDER STD LEFT/REAR**	**650**	**2007**	**2012**		**X**
CAN-AM	**650 OUTLANDER STD RIGHT**	**650**	**2007**	**2012**	**X**	
CAN-AM	**650 OUTLANDER XT LEFT/REAR**	**650**	**2007**	**2012**		**X**
CAN-AM	**650 OUTLANDER XT RIGHT**	**650**	**2007**	**2012**	**X**	
CAN-AM	**800 OUTLANDER MAX LTD LEFT/REAR**	**800**	**2007**	**2011**		**X**
CAN-AM	**800 OUTLANDER MAX LTD RIGHT**	**800**	**2007**	**2011**	**X**	
CAN-AM	**800 OUTLANDER MAX STD LEFT/REAR**	**800**	**2007**	**2011**		**X**
CAN-AM	**800 OUTLANDER MAX STD RIGHT**	**800**	**2007**	**2011**	**X**	
CAN-AM	**800 OUTLANDER MAX XT LEFT/REAR**	**800**	**2007**	**2011**		**X**

ACCOSSATO

PASTIGLIE BRAKE PADS

APPLICAZIONI PER CODICE PASTIGLIA / applications for pads code

AGPA115						
MARCA Brand	MODELLO Model	CC	DA From	A To	ANT. Front	POST. Rear
CAN-AM	800 OUTLANDER MAX XT RIGHT	800	2007	2011	X	
CAN-AM	800 OUTLANDER STD LEFT/REAR	800	2007	2011		X
CAN-AM	800 OUTLANDER STD RIGHT	800	2007	2011	X	
CAN-AM	800 OUTLANDER XT LEFT/REAR	800	2007	2011		X
CAN-AM	800 OUTLANDER XT RIGHT	800	2007	2011	X	
CAN-AM	800 RENEGADE EFI LEFT/REAR	800	2007	2011		X
CAN-AM	800 RENEGADE EFI RIGHT	800	2007	2011	X	
CAN-AM	800 RENEGADE LEFT/ REAR	800	2008	2011		X
CAN-AM	800 RENEGADE RIGHT	800	2008	2011	X	
CAN-AM	800 RENEGADE X LEFT/REAR	800	2008	2011		X
CAN-AM	800 RENEGADE X RIGHT	800	2008	2011	X	
CAN-AM	1000 COMMANDER MAX RIGHT	1000	2014			X
CAN-AM	1000 MAVERICK RIGHT	1000	2013			X

AGPA115						
MARCA Brand	MODELLO Model	CC	DA From	A To	ANT. Front	POST. Rear
CANNONDALE	440 BLAZE RIGHT	440	2003		X	
CANNONDALE	440 CANNIBAL RIGHT	440	2003		X	
CANNONDALE	440 GLAMIS RIGHT	440	2003		X	
CANNONDALE	440 MOTO RIGHT	440	2003		X	
CANNONDALE	440 SPEED RIGHT	440	2003		X	
JOHN DEERE	500 BUCK EX, EXT LEFT/REAR	500	2005			X
JOHN DEERE	500 BUCK EX, EXT RIGHT	500	2005		X	
JOHN DEERE	500 BUCK LEFT/REAR	500	2005			X
JOHN DEERE	500 BUCK RIGHT	500	2005		X	
JOHN DEERE	500 TRAIL BUCK LEFT/REAR	500	2005			X
JOHN DEERE	500 TRAIL BUCK RIGHT	500	2005		X	
JOHN DEERE	650 TRAIL BUCK EX, EXT LEFT/REAR	650	2005			X
JOHN DEERE	650 TRAIL BUCK EX, EXT RIGHT	650	2005		X	
JOHN DEERE	650 TRAIL BUCK LEFT/REAR	650	2005			X
JOHN DEERE	650 TRAIL BUCK RIGHT	650	2005		X	

MESCOLA ORGANICA E SINTERIZZATA organic and sintered compounds
OR / ST

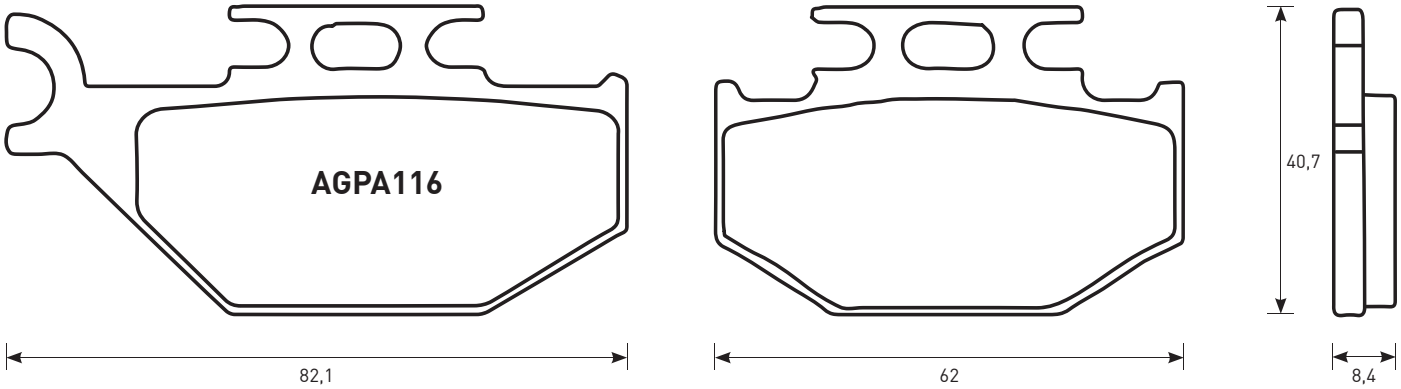

CROSS REFERENCE	
EBC	FA414
BRAKING	936
CL	1102
SBS	836

EQUIVALENT OE #	
	5910031850

AGPA116						
MARCA Brand	MODELLO Model	CC	DA From	A To	ANT. Front	POST. Rear
SUZUKI	KLT-A 400 KING QUAD RIGHT	400	2008		X	
SUZUKI	KLT-F 400 KING QUAD RIGHT	400	2008		X	
SUZUKI	LT-A 400 KING QUAD RIGHT	400	2008		X	
SUZUKI	LT-F 400 KING QUAD RIGHT	400	2008		X	
SUZUKI	LT-A 450 KING QUAD RIGHT	450	2008		X	
SUZUKI	LT-A 500 KING QUAD RIGHT	500	2011		X	
SUZUKI	LT-A 700 KING QUAD RIGHT	700	2005		X	
SUZUKI	LT-A 750 KING QUAD RIGHT	750	2008		X	

PASTIGLIE BRAKE PADS

APPLICAZIONI PER CODICE PASTIGLIA / applications for pads code

MESCOLA ORGANICA E SINTERIZZATA organic and sintered compound
OR / ST

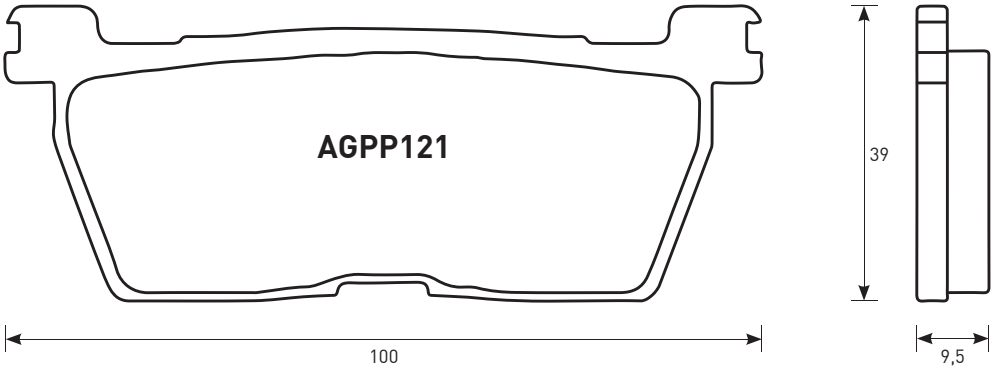

CROSS REFERENCE	
EBC	FA319/2
OGNIBENE	297
BRAKING	903
NEWFREN	.FD.0345
BREMBO	07YA39
FERODO	FDB2156
CL	1084
SBS	769

EQUIVALENT OE #	
OEM Yamaha	5JW W0046 00
OEM Yamaha	1D7 W0046 00
OEM Yamaha	3P6 W0046 50
OEM Yamaha	2S3 W0046 00
OEM Yamaha	5PS W0046 00

AGPP121

MARCA Brand	MODELLO Model	CC	DA From	A To	ANT. Front	POST. Rear
HYOSUNG	GV 650 AGUILA	650	2004	2005		X
YAMAHA	TDM 900	900	2002			X
YAMAHA	XV 950 BOLT	950	2014			X
YAMAHA	XV 950 BOLT C-SPEC	950	2015			X
YAMAHA	XV 950 BOLT R-SPEC	950	2014			X

AGPP121

MARCA Brand	MODELLO Model	CC	DA From	A To	ANT. Front	POST. Rear
YAMAHA	XVS 950 A MIDNIGHT STAR	950	2009			X
YAMAHA	XTZ 1200 SUPER TENERE	1200	2010			X
YAMAHA	XTZ 1200 ZE	1200	2014			X
YAMAHA	FJR 1300	1300	2001			X
YAMAHA	FJR 1300 A	1300	2013			X
YAMAHA	FJR 1300 ABS	1300	2003	2012		X
YAMAHA	FJR 1300 AS	1300	2013			X
YAMAHA	XVS 1300 A MIDNIGHT STAR	1300	2007			X
YAMAHA	XVS 1300 CUSTOM	1300	2014			X
YAMAHA	XVS 1300 STRYKER	1300	2011			X
YAMAHA	VMX 1700 V-MAX	1700	2009			X
YAMAHA	XV 1700 PC ROAD STAR WARRIOR	1700	2003			X
YAMAHA	XV 1900 MIDNIGHT STAR	1900	2006			X

MESCOLA SINTERIZZATA, EV1 E EV2 sintered, ev1 and ev2 compounds
EV1 / EV2

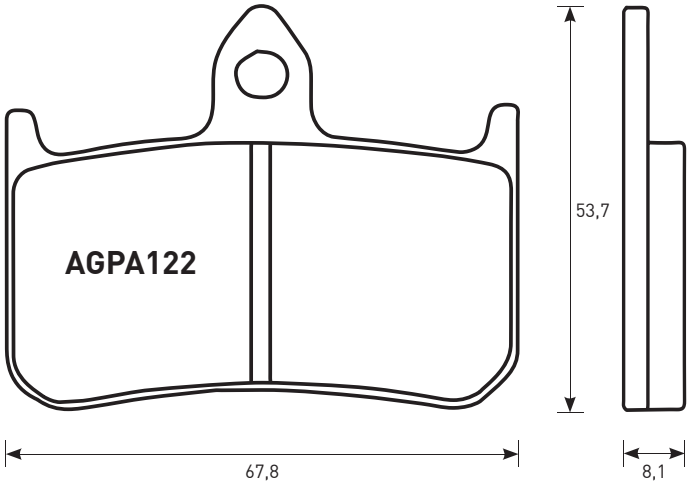

CROSS REFERENCE	
EBC	FA187
NEWFREN	.FD.0131
BREMBO	07HO2807
FERODO	FDB858
CL	2245
SBS	622

EQUIVALENT OE #	
OEM Honda	06455 MW4 405

AGPA122

MARCA Brand	MODELLO Model	CC	DA From	A To	ANT. Front	POST. Rear
HONDA	NS 125	125	1989		X	
HONDA	NS 250	250	1989		X	
HONDA	NSR 250 R, SP	250	1990		X	
HONDA	NSR 250 RJ 88	250	1988		X	
HONDA	RS 250 R	250	1991	1992	X	
HONDA	NTV 400 BROS II	400	1988		X	
HONDA	RVF 400 RR (NC35)	400	1990	1996	X	
HONDA	VFR 400 R	400	1991	1992	X	
HONDA	VTR 400 R (NC 30)	400	1990		X	
HONDA	NTV 600 BROS I	600	1988		X	
HONDA	NTV 650 BROS	650	1988	1997	X	
HONDA	NR 750	750	1992		X	
HONDA	RVF 750 RR (RC-45)	750	1994	1998	X	
HONDA	VFR 750 R	750	1988	1988	X	
HONDA	CB 900 HORNET	900	2002		X	
HONDA	CBR 900 RR, FIREBLADE	900	1992	1997	X	
HONDA	CB 1000 F (BIG ONE)	1000	1993	1997	X	
HONDA	VTR 1000 F FIRESTORM	1000	1997		X	
HONDA	CB 1300 X-4	1300	1997		X	

ACCOSSATO

PASTIGLIE BRAKE PADS

APPLICAZIONI PER CODICE PASTIGLIA / applications for pads code

MESCOLA EV1 E EV2 ev1 and ev2 compounds
EV1 / EV2

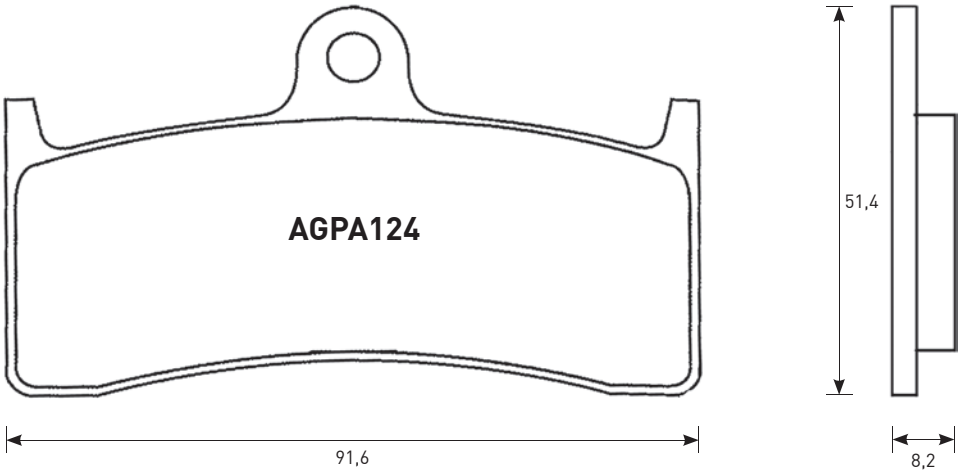

CROSS REFERENCE	
EBC	FA249/FA424
NEWFREN	.FD.0246
BREMBO	07KA20RC
FERODO	FDB2036
CL	2899
SBS	676

EQUIVALENT OE #	
OEM MV Agusta	8000 94024

AGPA124

MARCA Brand	MODELLO Model	CC	DA From	A To	ANT. Front	POST. Rear
HARLEY DAVIDSON	BRAKING FRONT				X	
BUELL	M2 1200 CYCLONE	1200	1998	2002	X	
BUELL	S1 1200 LIGHTNING	1200	1998	2002	X	
BUELL	S1 1200 WHITELIGHTNING	1200	1998	2002	X	
BUELL	S3 1200 THUNDERBOLT	1200	1998	2002	X	

AGPA124

MARCA Brand	MODELLO Model	CC	DA From	A To	ANT. Front	POST. Rear
BUELL	X1 1200 LIGHTNING	1200	2001	2002	X	
HHI	6 PISTON CALIPER				X	
HONDA	CB 1300 SF	1300	1998		X	
KAWASAKI	ZX-7RR 750 NINJA N1	750	1996	2002	X	
MV AGUSTA	750 BRUTALE, BRUTALE S	750	2001	2005	X	
MV AGUSTA	750 F4 SPR	750	2001		X	
MV AGUSTA	750 F4/F4S	750	1999		X	
MV AGUSTA	910 BRUTALE	910	2006	2008	X	
MV AGUSTA	910 BRUTALE R	910	2006	2008	X	
MV AGUSTA	910 BRUTALE S	910	2006	2008	X	
MV AGUSTA	1000 F4 MAMBA	1000	2004	2006	X	
MV AGUSTA	1000 F4 TAMBURINI	1000	2004	2006	X	
MV AGUSTA	1000 F4S	1000	2004	2006	X	

MESCOLA EV1 E EV2 ev1 and ev2 compounds
EV1 / EV2

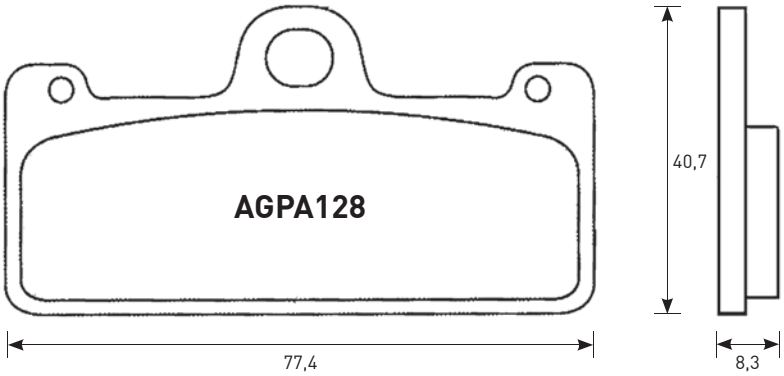

CROSS REFERENCE	
EBC	FA218
NEWFREN	.FD.0213
FERODO	FDB2007
CL	2329
SBS	695

EQUIVALENT OE #	
107A48602	7684831
107A48603	107684830
M028Z04	

AGPA128

MARCA Brand	MODELLO Model	CC	DA From	A To	ANT. Front	POST. Rear
APRILIA	SXV 450 VAN DEN BOSH REP.	450	2008		X	
APRILIA	SXV 550 VAN DEN BOSH REP.	550	2008		X	
BREMBO RACING CALIPER	GP X10.48.13/14, RACING				X	

PASTIGLIE BRAKE PADS

APPLICAZIONI PER CODICE PASTIGLIA / applications for pads code

MESCOLA EV1 E EV2 ev1 and ev2 compounds
EV1 / EV2

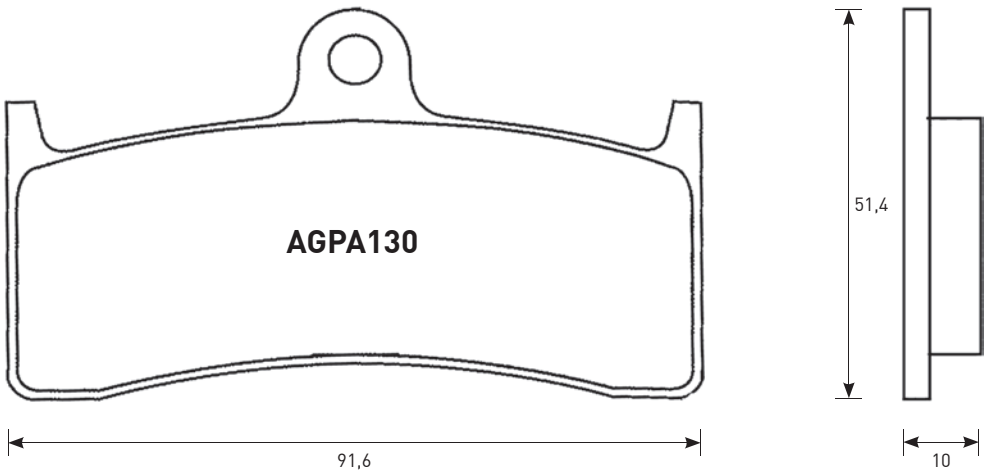

CROSS REFERENCE	
NEWFREN	**.FD.0246**
FERODO	**FDB2036**
CL	**2404**
SBS	**729**

EQUIVALENT OE #	
/	**/**

AGPA130						
MARCA Brand	**MODELLO** Model	**CC**	**DA** From	**A** To	**ANT.** Front	**POST.** Rear
NISSIN	**6 PISTON RACING CALIPER**				**X**	
PERFORMANCE MACHINE	**112 AGPA130 6B**				**X**	
PERFORMANCE MACHINE	**112 AGPA130 6QC**				**X**	
YAMAHA	**YZF 750 R7 0W02 RACE KIT**	**750**	**1999**		**X**	

MESCOLA SINTERIZZATA, ZXC E EV2 sintered, zxc and ev2 compounds
ST / ZXC / EV2

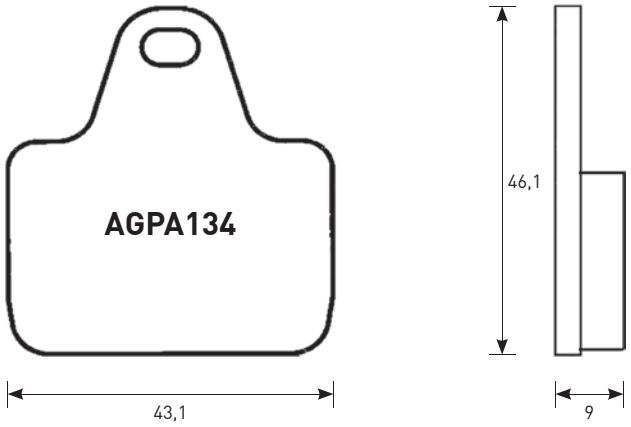

CROSS REFERENCE	
EBC	**FA435/4**
BRAKING	**937**
NEWFREN	**.FD.0370**
FERODO	**FDB2166**
CL	**1075**
SBS	**805**

EQUIVALENT OE #	
7787424	**8000B1421**
CP6688D29	**107A48604**
M049Z04	

AGPA134						
MARCA Brand	**MODELLO** Model	**CC**	**DA** From	**A** To	**ANT.** Front	**POST.** Rear
A.P. RACING CALIPERS	**CP-6688 FOUR PAD RADIAL 4 PISTON MONOBLOCK**				**X**	
ACCOSSATO	**108MM RADIAL RACING CALIPER, 4 PISTON/4 PAD**				**X**	
BREMBO RACING CALIPER	**RADIAL MONOBLOCK X99C460/61, P4 34**				**X**	
PVM	**4 PAD CALIPER**				**X**	

ACCOSSATO

PASTIGLIE BRAKE PADS

APPLICAZIONI PER CODICE PASTIGLIA / applications for pads code

MESCOLA EV1 ev1 compound
EV1

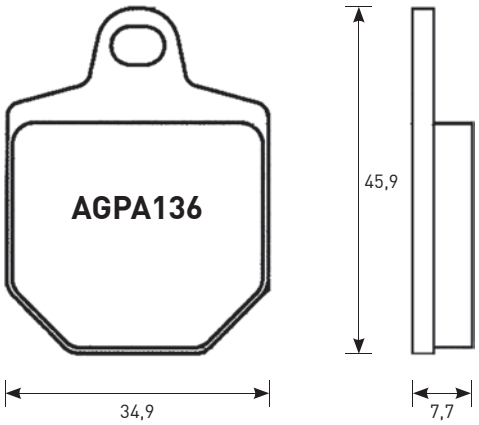

CROSS REFERENCE	
EBC	FA433/4
BRAKING	932
NEWFREN	.FD.0363
BREMBO	07GR76
FERODO	FDB2244
CL	1129
SBS	843

EQUIVALENT OE #	
OEM KTM	59413030000

AGPA136						
MARCA Brand	MODELLO Model	CC	DA From	A To	ANT. Front	POST. Rear
HM	CRM 125 X SUPERMOTARD	125	2007		X	
HM	CRM 250 X SUPERMOTARD	250	2007		X	
HM	CRM 450 X SUPERMOTARD	450	2007		X	
HM	CRM 500 X SUPERMOTARD	500	2007		X	
KTM	SX 450 SMR	450	2007	2012	X	
KTM	SX 560 SMR	560	2006		X	

MESCOLA ZXC zxc compound
ZXC

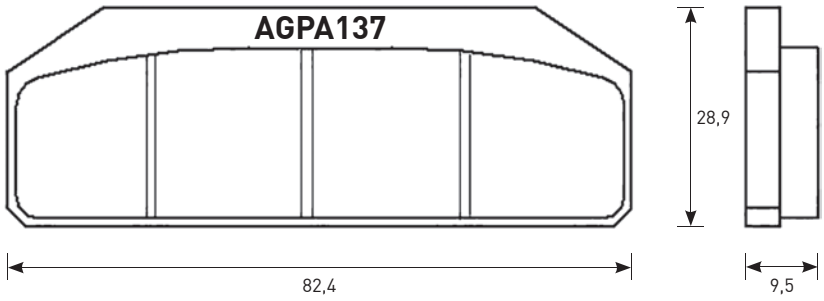

CROSS REFERENCE	
SBS	845

EQUIVALENT OE #	
/	/

AGPA137						
MARCA Brand	MODELLO Model	CC	DA From	A To	ANT. Front	POST. Rear
BREMBO RACING CALIPERS	RADIAL MONOBLOCK XA8Y310/11		2011	2011	X	
ACCOSSATO	RACING CALIPER					

PASTIGLIE BRAKE PADS

APPLICAZIONI PER CODICE PASTIGLIA / applications for pads code

MESCOLA EV1 E EV2 ev1 and ev2 compounds
EV1 / EV2

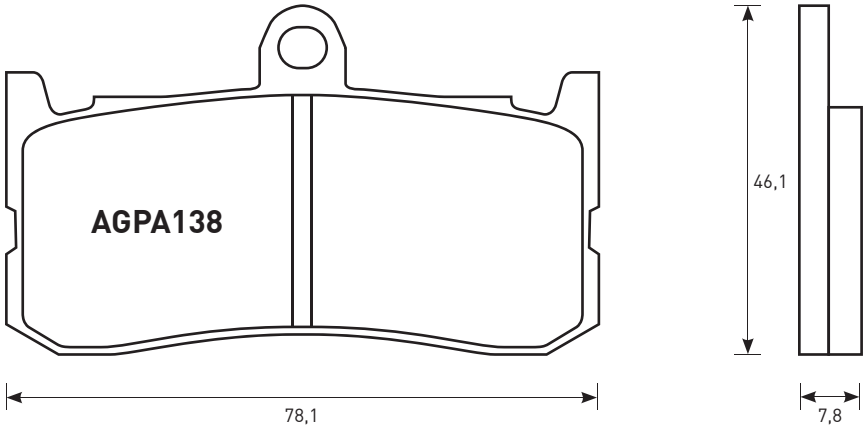

CROSS REFERENCE	
EBC	FA491
BRAKING	941
FERODO	FDB2252
CL	1209
SBS	864

EQUIVALENT OE #	
OEM Triumph	T2021221

AGPA138						
MARCA Brand	MODELLO Model	CC	DA From	A To	ANT. Front	POST. Rear
TRIUMPH	675 DAYTONA TRIPLE (RAD.CAL)	675	2009	2013	X	

MESCOLA ST, EV1 EV2 st, ev1 and ev2 compounds
ST / EV1 / EV2

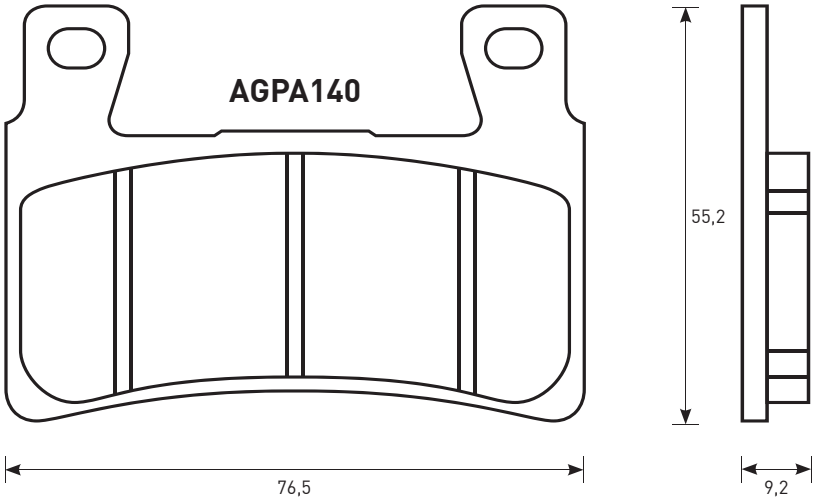

CROSS REFERENCE	
EBC	FA296
NEWFREN	.FD.0258
BREMBO	07HO4507
FERODO	FDB2114/FDB2079
CL	2711
SBS	860

EQUIVALENT OE #	
OEM Harley	42739 08

AGPA140						
MARCA Brand	MODELLO Model	CC	DA From	A To	ANT. Front	POST. Rear
HARLEY DAVIDSON	XR 1200	1200	2008		X	
HARLEY DAVIDSON	XR 1200 X	1200	2010		X	

ACCOSSATO

PASTIGLIE BRAKE PADS

APPLICAZIONI PER CODICE PASTIGLIA / applications for pads code

MESCOLA ORGANICA E SINTERIZZATA organic and sintered compound
OR / ST

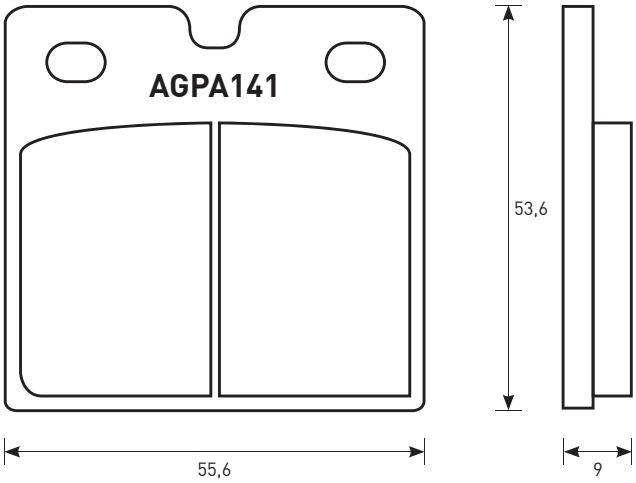

CROSS REFERENCE	
EBC	FA018
BRAKING	613
NEWFREN	.FD.0013
BREMBO	07BB1410
FERODO	FDB108
CL	2332
SBS	506

EQUIVALENT OE #	
OEM BMW	34 21 7 657 025
OEM BMW	34 11 2 301 360
OEM BMW	34 11 1 454 720
OEM BMW	34 11 1 458 388
OEM BMW	34 21 7 690 262
OEM Ducati	0377 39766
OEM Ducati	0820 39666
OEM Ducati	0370 39760
OEM Moto Guzzi	61654630

AGPA141						
MARCA Brand	MODELLO Model	CC	DA From	A To	ANT. Front	POST. Rear
APRILIA	AF1 250 REPLICA	250	1990			X
BENELLI	350 4T TURISMO	350				X
BENELLI	354	354	1978	1982		X
BENELLI	500 4T	500	1976			X
BENELLI	750 SEI	750	1975		X	
BENELLI	900 SEI	900	1984		X	X
BERINGER	2 PISTON CLASSIC BILLET CALIPER					
BIMOTA	ALL MODELS		1982	1988	X	X
BIMOTA	SB3 D		1983		X	X
BMW	R65 650 GS	650	1987		X	
BMW	R65 650 GS	650	1991		X	
BMW	R65 650 LS	650	1982		X	
BMW	R65/1 650	650	1986			X
BMW	K75 750	750	1990			X
BMW	K75 750 C	750	1985		X	
BMW	K75 750 RT	750	1991			X
BMW	K75 750 S, C	750	1985		X	X
BMW	R80 800	800	1985		X	
BMW	R80 800 G/S P.-D.	800	1986		X	
BMW	R80 800 GS	800	1981		X	
BMW	R80 800 GS	800	1991		X	
BMW	R80 800 R	800	1991			X
BMW	R80 800 RT	800	1983		X	
BMW	R80/7 800	800	1979	1981		X
BMW	K1 1000	1000	1989			X
BMW	K100 1000 LT	1000	1987		X	X

AGPA141						
MARCA Brand	MODELLO Model	CC	DA From	A To	ANT. Front	POST. Rear
BMW	K100 1000 LT	1000	1992			X
BMW	K100 1000 LT ABS	1000	1989			X
BMW	K100 1000 RS	1000	1990			X
BMW	K100 1000 RS ABS	1000	1988	1989		X
BMW	K100 1000 RS, RT	1000	1983		X	X
BMW	R100 1000	1000	1981		X	X
BMW	R100 1000 CS,RS, RT	1000	1981		X	X
BMW	R100 1000 R	1000	1991			X
BMW	R100 1000 RS	1000	1976	1980		X
BMW	R100 1000 RS	1000	1993			X
BMW	R100 1000 S	1000	1978	1980		X
BMW	R100 1000 T	1000	1979			X
BMW	K1100 LT/SE	1100	1992			X
BMW	K1100 RS	1100	1993			X
BMW	R1100 RS	1100	1993			X
BMW	R1100 RS	1100	1994			X
BMW	K 1200 GT WITH INTEGRAL ABS	1200	2002	2007		X
BMW	K 1200 RS	1200	1997	2003		X
BREMBO RACING CALIPERS	108N, P2 38					
BREMBO RACING CALIPERS	F08					
CZ	CZ 180	180	1993		X	
DUCATI	250 DESMO	250		1977	X	
DUCATI	350 DESMO	350		1977	X	
DUCATI	350 F3	350			X	X
DUCATI	500 SPORT	500	1977		X	X
DUCATI	600 PANTAH TL, SL	600			X	X
DUCATI	600 SL, TL PANTAH	600	1976		X	
DUCATI	650 PANTAH	650	1984		X	X
DUCATI	750 F1	750	1986		X	X
DUCATI	750 GT	750	1974	1976	X	
DUCATI	750 PASO	750	1987		X	
DUCATI	750 SPORT	750	1990		X	X
DUCATI	750 SS	750	1974	1976	X	X
DUCATI	750 SS	750	1991			X
DUCATI	851 STRADA	851	1991			X
DUCATI	860 GT	860			X	X
DUCATI	860 GT	860	1975	1977	X	
DUCATI	888 ROCHE REPLICA	888	1991			X
DUCATI	900 GTS	900	1977		X	
DUCATI	900 MIKE HAILWOOD REPLICA	900	1985		X	X
DUCATI	900 S2 DESMO	900	1985		X	X
DUCATI	900 SPORT	900	1977		X	X
DUCATI	900 SS	900	1978	1989	X	X
DUCATI	906 900 PASO	900	1989		X	
DUCATI	1000 /6 MIKE HAILWOOD REPLICA	1000	1985		X	X
DUCATI	1000 MILLE REPLICA	1000	1984		X	X
DUCATI	1000 S2 DESMO	1000	1985		X	X
HERCULES	SILVER STAR CLASSIC		1993		X	
HOREX	80 REBELL T	80	1986		X	X
HOREX	80 SPORT L	80	1986		X	X
HOREX	125 IMPERATOR	125	1996		X	
HOREX	125 REGENT	125	1996		X	
HOREX	560 E	560	1986		X	X
HOREX	600 COLUMBUS	600	1987		X	X
INDIAN	1700 CHIEF BLACKHAWK	1700	2011	2013		X
INDIAN	1700 CHIEF BOMBER	1700	2010	2013		X

PASTIGLIE BRAKE PADS

APPLICAZIONI PER CODICE PASTIGLIA / applications for pads code

ACCOSSATO

AGPA141						
MARCA Brand	**MODELLO** Model	**CC**	**DA** From	**A** To	**ANT.** Front	**POST.** Rear
INDIAN	1700 CHIEF CLASSIC	1700	2010	2013		X
INDIAN	1700 CHIEF DARK HORSE	1700	2010	2013		X
INDIAN	1700 CHIEF DELUXE	1700	2009	2013		X
INDIAN	1700 CHIEF ROADMASTER	1700	2009	2013		X
INDIAN	1700 CHIEF STANDARD	1700	2009	2013		X
INDIAN	1700 CHIEF VINTAGE	1700	2009	2013		X
JAWA	CZ 125 2T	125			X	
JAWA	CZ 125 MX	125			X	
JAWA	CZ 180	180	1992		X	
JAWA	300 TRAIL	300	1993		X	
LAVERDA	SFC 500	500			X	X
LAVERDA	SFC 600	600	1986		X	X
LAVERDA	650 V-SIX	650	1993		X	X
LAVERDA	SF2 750	750	1974	1978	X	
LAVERDA	SF3 750	750	1974	1978	X	
LAVERDA	SF3 750 RGS CORSA, EXECUTIVE	750	1977		X	X
LAVERDA	1000 JOTA	1000	1976		X	X
LAVERDA	3C 1000 3CE, 3CL	1000	1974		X	X
LAVERDA	RGS 1000	1000	1983		X	X
LAVERDA	RGS 1000 JOTA	1000	1986		X	X
LAVERDA	SFC 1000	1000	1985	1986	X	X
LAVERDA	TGA 1000 EXECUTIVE	1000	1984		X	X
LAVERDA	1200 MIRAGE	1200	1978		X	X
MOTO GUZZI	NTX 350	350	1990			X
MOTO GUZZI	V35 350 C	350			X	
MOTO GUZZI	V35 350 FLORIDA	350			X	
MOTO GUZZI	V35 350 GT	350	1990		X	
MOTO GUZZI	V35 350 III	350	1987		X	X
MOTO GUZZI	V35 350 TT	350	1986		X	X
MOTO GUZZI	NTX 650	650	1990			X
MOTO GUZZI	V65 650 FLORIDA	650	1986		X	X
MOTO GUZZI	V65 650 GT	650	1990		X	
MOTO GUZZI	NTX 750	750	1990			X
MOTO GUZZI	S3 750 LEFT	750	1975	1976	X	
MOTO GUZZI	S3 750 RIGHT	750	1975	1976	X	
MOTO GUZZI	SP 750	750	1991		X	X
MOTO GUZZI	V75 750	750	1986		X	X
MOTO GUZZI	V75 750 DUNA	750	1986		X	X
MOTO GUZZI	V75 750 TT PARIS-DAKAR	750	1986		X	X
MOTO GUZZI	850 LE MANS	850	1976		X	X
MOTO GUZZI	T 850	850	1974	1976	X	X
MOTO GUZZI	T3 850	850	1975		X	X

AGPA141						
MARCA Brand	**MODELLO** Model	**CC**	**DA** From	**A** To	**ANT.** Front	**POST.** Rear
MOTO GUZZI	T4 850	850	1975		X	X
MOTO GUZZI	T5 850	850	1975		X	X
MOTO GUZZI	T5 850 N.T.	850	1986		X	X
MOTO GUZZI	1000 CALIFORNIA II	1000	1985	1986	X	X
MOTO GUZZI	1000 CALIFORNIA III C	1000	1991	1995	X	X
MOTO GUZZI	1000 CALIFORNIA III, FUEL INJECTION	1000	1989		X	X
MOTO GUZZI	1000 DAYTONA	1000	1991		X	X
MOTO GUZZI	1000 LE MANS IV	1000	1985		X	X
MOTO GUZZI	1000 LE MANS, V	1000	1990		X	X
MOTO GUZZI	GT 1000 V	1000	1991		X	X
MOTO GUZZI	S 1000	1000	1990		X	X
MOTO GUZZI	SP 1000 III	1000	1991		X	X
MOTO GUZZI	SP 1000 LE MANS LEFT/REAR	1000	1979		X	
MOTO GUZZI	SP 1000 LE MANS RIGHT	1000	1979		X	
MOTO GUZZI	V 1000 STRADA	1000	1993		X	
MOTO GUZZI	1100 CALIFORNIA	1100	1996		X	X
MV AGUSTA	ALL MODELS				X	X
MZ	125 ROADSTAR	125			X	
MZ	125 SPORTSTAR	125	1993		X	
MZ	ETZ 125	125	1982		X	
MZ	ETZ 125	125	1985		X	
MZ	ETZ 150	150	1982		X	
MZ	ETZ 150	150	1985		X	
MZ	ETZ 250	250	1982		X	
MZ	251 (MUZ) SPORTSTAR	251	1996		X	
MZ	251 SAXON TOUR	251			X	
MZ	ETZ 251	251	1989		X	
MZ	ETZ 300 LUX	300	1990		X	
MZ	ETZ 300 X	300	1988		X	
MZ	301 (MUZ) SPORTSTAR	301	1996		X	
MZ	301 SAXON TOUR	301			X	
MZ	ETZ 301	301	1990		X	
MZ	500 SAXON COUNTRY	500	1992		X	
MZ	500 SAXON FUN	500	1992		X	
MZ	500 SAXON VOYAGER	500			X	
MZ	500 SILVER STAR CLASSIC	500	1993		X	
NORTON	COMMANDER		1990		X	X
NORTON	INTERPOL		1983		X	X
NORTON	WANKEL CLASSIC		1988		X	X
NORTON	F-1		1990			X
OSSA	500 YANQEE	500	1978		X	
SWM	XP 350 SAHARA	350			X	
TRIUMPH	750 BONNEVILLE U.K.	750	1987		X	X
ZUNDAPP	KS 175	175	1978		X	

PASTIGLIE BRAKE PADS

APPLICAZIONI PER CODICE PASTIGLIA / applications for pads code

MESCOLA ORGANICA E SINTERIZZATA organic and sintered compound
OR / ST

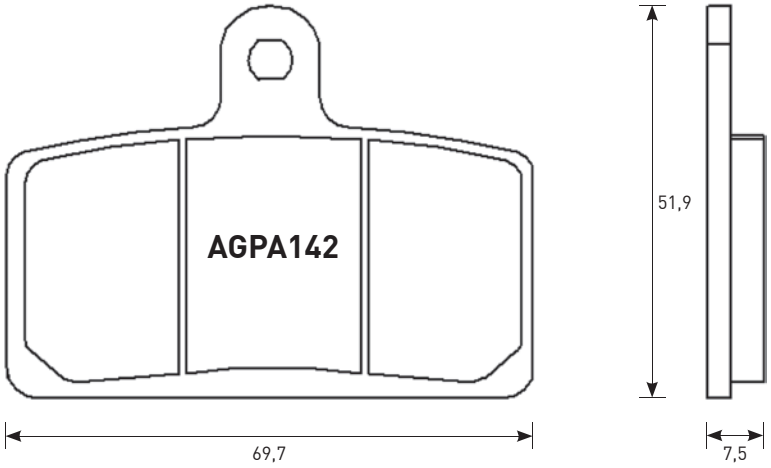

CROSS REFERENCE	
EBC	FA399
BRAKING	964
NEWFREN	.FD.0380
BREMBO	07GR72
FERODO	FDB2201
SBS	189/821

EQUIVALENT OE #	
00H01201221	8044220
810K5804	864580
866687	

AGPA142

MARCA Brand	MODELLO Model	CC	DA From	A To	ANT. Front	POST. Rear
APRILIA	RS-4 50	50	2012		X	
APRILIA	RS-4 125	125	2011	2012	X	
BLATA	125 ENDURO	125	2007		X	
BLATA	125 MOTARD	125	2007		X	
DERBI	50 DRD PRO CORSE	50	2006		X	
DERBI	GPX1 50	50	2006		X	

AGPA142

MARCA Brand	MODELLO Model	CC	DA From	A To	ANT. Front	POST. Rear
DERBI	GPR 80 CUP	80	2004		X	
DERBI	GPR 125	125	2005		X	
DERBI	GPR 125 NUDE	125	2005		X	
DERBI	GPR 125 RACING	125	2009		X	
GILERA	SC 125	125	2006		X	
MALAGUTI	NKD 50 DRAGON	50	2006		X	
MOTORHISPANIA	RX 50 R	50	2008		X	
MOTORHISPANIA	MH7 125 NAKED	125	2008		X	
MOTORHISPANIA	RX 125 R	125	2008		X	
RIEJU	RS3 50 PRO	350	2012		X	
RIEJU	125 TANGO	125	2006		X	
RIEJU	RS3 125	125	2010		X	
TOMOS	SM 125 F (RAD.CAL)	125	2006		X	

MESCOLA ORGANICA E SINTERIZZATA organic and sintered compound
OR / ST

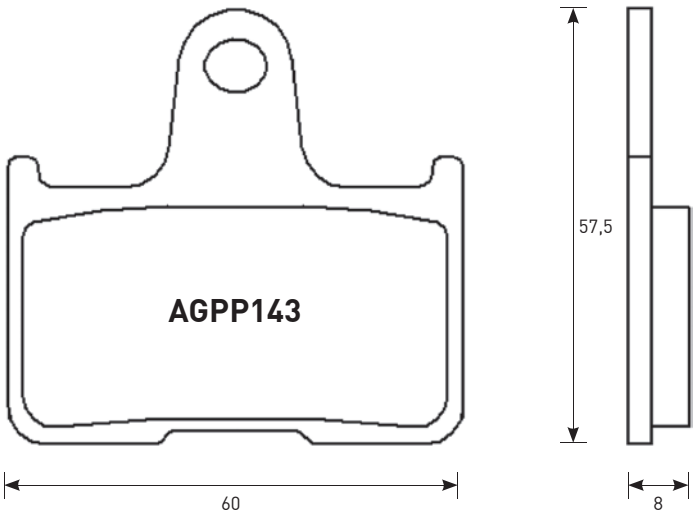

CROSS REFERENCE	
EBC	FA254
BRAKING	875
NEWFREN	.FD.0347
BREMBO	07KA21
FERODO	FDB2111
CL	2813
SBS	715

EQUIVALENT OE #	
OEM Kawasaki	43082 0055
OEM Suzuki	69100 18810
OEM Suzuki	69100 47820
OEM Suzuki	69100 40840
OEM Suzuki	69100 40820

AGPP143

MARCA Brand	MODELLO Model	CC	DA From	A To	ANT. Front	POST. Rear
HARLEY DAVIDSON	XL 883 L SUPER LOW	883	2014			X
HARLEY DAVIDSON	XL 883 N IRON	883	2014			X
HARLEY DAVIDSON	XL 883 R ROADSTER	883	2014			X
HARLEY DAVIDSON	XL 1200 C, CA, CB, CP CUSTOM	1200	2014			X
HARLEY DAVIDSON	XL 1200 T SUPER LOW	1200	2015			X
HARLEY DAVIDSON	XL 1200 V	1200	2014			X
HARLEY DAVIDSON	SEVENTY-TWO					X
HARLEY DAVIDSON	XL 1200 X FORTY-EIGHT	1200	2014			X
HONDA	CB 1300 R	1300	2002	2004		X
HONDA	CB 1300 SF	1300	1998			X
HONDA	CB 1300 X-4	1300	1997			X
KAWASAKI	ZX-7RR 750 NINJA N1	750	1996	2002		X
KAWASAKI	GTR 1400 (RAD.CAL)	1400	2007			X
KAWASAKI	ZZR 1400 (RAD.CAL)	1400	2006			X
MZ	1000 (MUZ) S	1000	2003			X
MZ	1000 (MUZ) SF	1000	2005			X
MZ	1000 (MUZ) SFX	1000	2007			X
MZ	1000 (MUZ) SN	1000	2005			X
MZ	1000 (MUZ) ST	1000	2007			X

PASTIGLIE BRAKE PADS

APPLICAZIONI PER CODICE PASTIGLIA / applications for pads code

MESCOLA SINTERIZZATA sintered compound
ST

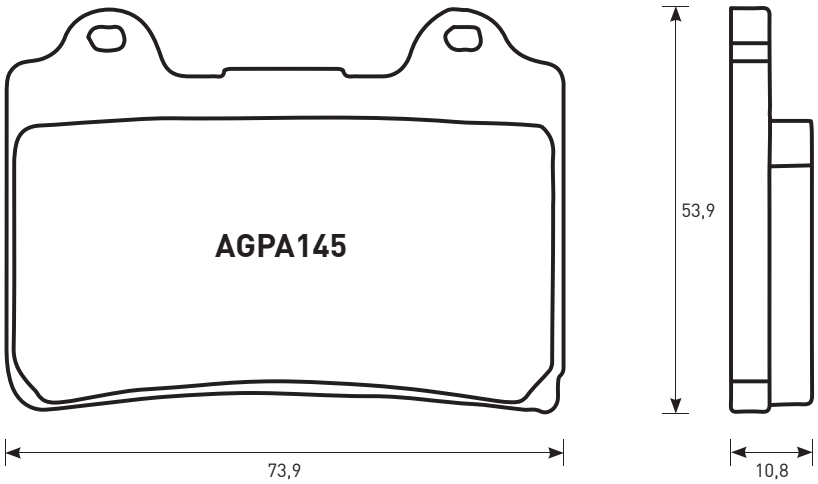

CROSS REFERENCE	
EBC	FA123
OGNIBENE	228
BRAKING	692
NEWFREN	.FD.0104
BREMBO	07YA1711
FERODO	FDB662
SBS	590

EQUIVALENT OE #	
OEM Yamaha	4NK W0045 00
OEM Yamaha	4NK W0046 00
OEM Yamaha	4NK W0045 01
OEM Yamaha	3GM W0045 03

AGPA145

MARCA Brand	MODELLO Model	CC	DA From	A To	ANT. Front	POST. Rear
YAMAHA	FZR 250	250	1987	1988	X	
YAMAHA	TDR 250	250	1988	1992	X	
YAMAHA	TZR 250	250	1987	1988	X	
YAMAHA	FZR 400	400	1988	1990	X	
YAMAHA	SRX 400	400	1987		X	
YAMAHA	SRX 600	600	1988	1989	X	

AGPA145

MARCA Brand	MODELLO Model	CC	DA From	A To	ANT. Front	POST. Rear
YAMAHA	FZ 750 GENESIS	750	1989	1992	X	
YAMAHA	TDM 850	850	1991	1995	X	
YAMAHA	XVZ 1300 A ROYAL STAR	1300	1996			X
YAMAHA	XVZ 1300 AT ROYAL STAR TOUR CLASSIC	1300	1997			X
YAMAHA	XVZ 1300 ROYAL STAR BOULEVARD	1300	1999			X
YAMAHA	XVZ 1300 TF ROYAL STAR VENTURE	1300	1999			X
YAMAHA	XVZ 1300 VENTURE ROYALE	1300	1986	1995		X
YAMAHA	XV 1600 A WILD STAR	1600	1999			X
YAMAHA	XV 1700 ROAD STAR WARRIOR	1700	2002			X

MESCOLA SINTERIZZATA sintered compound
ST

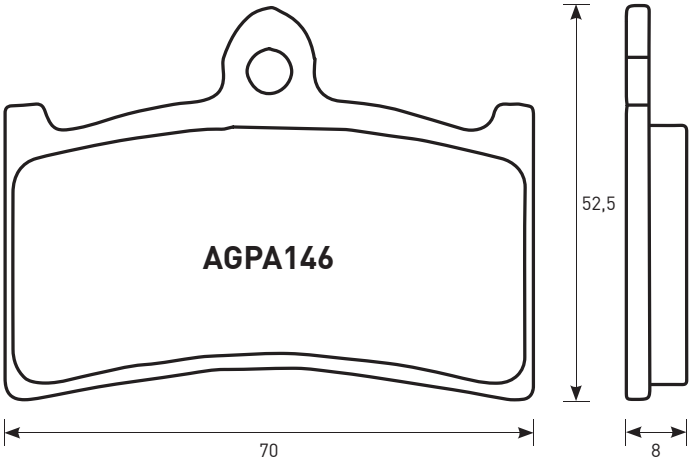

CROSS REFERENCE	
EBC	FA187
OGNIBENE	203
NEWFREN	.FD.0131
BREMBO	07HO2807
FERODO	FDB858
SBS	622

EQUIVALENT OE #	
OEM Honda	06455 MW4 405

AGPA146

MARCA Brand	MODELLO Model	CC	DA From	A To	ANT. Front	POST. Rear
HONDA	NS 125	125	1989		X	
HONDA	NS 250	250	1989		X	
HONDA	NSR 250 R, SP	250	1990		X	
HONDA	NSR 250 RJ	250	1988		X	
HONDA	RS 250 R	250	1991	1992	X	
HONDA	NTV 400 BROS II	400	1988		X	
HONDA	RVF 400 RR (NC35)	400	1990	1996	X	
HONDA	VFR 400 R	400	1991	1992	X	
HONDA	VTR 400 R (NC 30)	400	1990		X	
HONDA	NTV 600 BROS I	600	1988		X	
HONDA	NTV 650 BROS	650	1988	1997	X	
HONDA	NR 750	750	1992		X	
HONDA	RVF 750 RR (RC-45)	750	1994	1998	X	
HONDA	VFR 750 R	750	1988	1993	X	
HONDA	CB 900 HORNET	900	2002		X	
HONDA	CBR 900 RR, FIREBLADE	900	1992	1997	X	
HONDA	CB 1000 F (BIG ONE)	1000	1993	1997	X	
HONDA	VTR 1000 F FIRESTORM	1000	1997		X	
HONDA	CB 1300 X-4	1300	1997		X	

ACCOSSATO

PASTIGLIE BRAKE PADS

APPLICAZIONI PER CODICE PASTIGLIA / applications for pads code

MESCOLA SINTERIZZATA sintered compound
ST

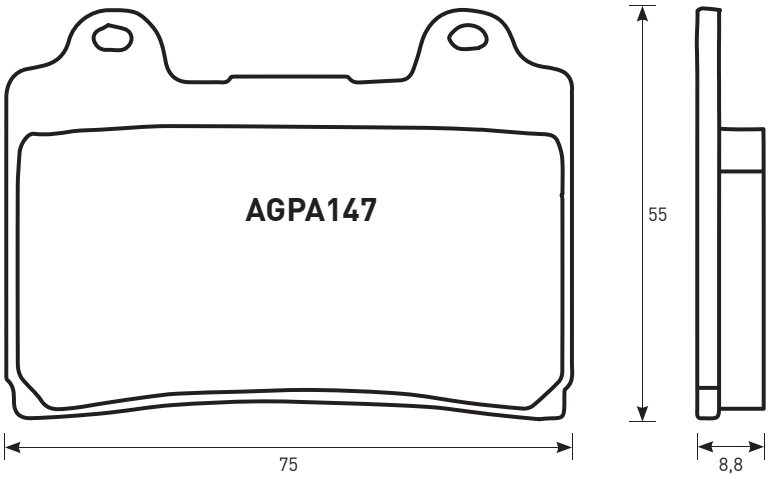

CROSS REFERENCE	
EBC	FA182
BRAKING	751
NEWFREN	.FD.0176
BREMBO	07YA2609
FERODO	FDB637
SBS	665

EQUIVALENT OE #	
OEM Yamaha	3GM W0045 60

AGPA147						
MARCA Brand	MODELLO Model	CC	DA From	A To	ANT. Front	POST. Rear
YAMAHA	FZR 600 R	600	1992	1995	X	
YAMAHA	FZR 1000 EX-UP	1000	1992	1993	X	

MESCOLA ORGANICA E SINTERIZZATA organic and sintered compound
OR / ST

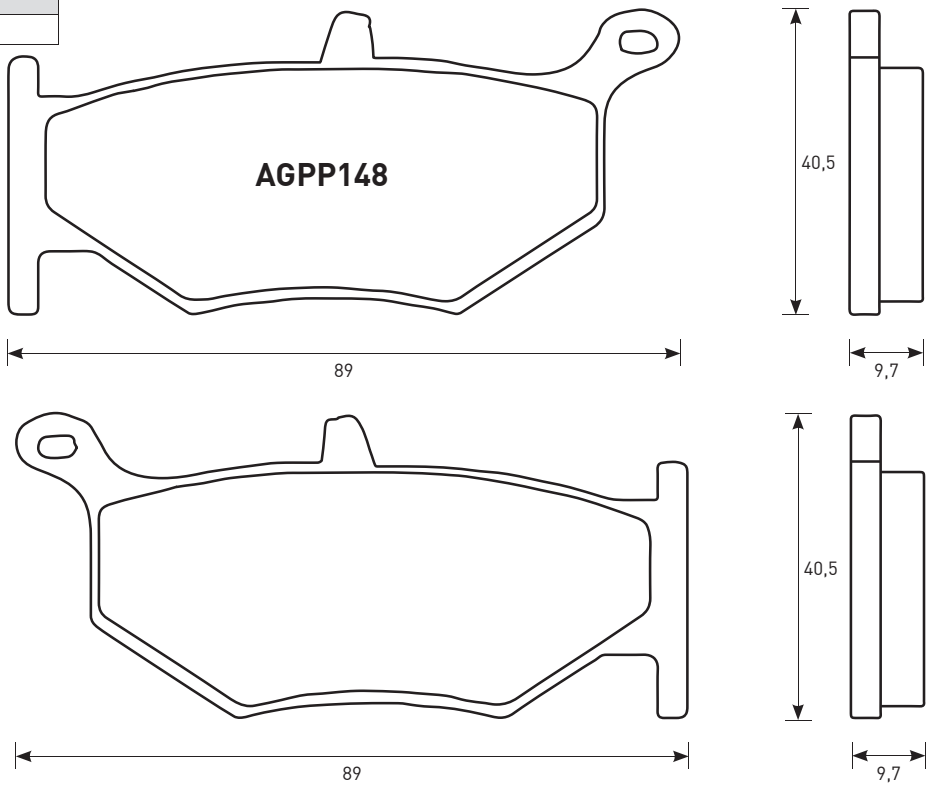

CROSS REFERENCE	
EBC	FA419
OGNIBENE	319
BRAKING	924
NEWFREN	.FD.0402
BREMBO	07SU32
FERODO	FDB2213
CL	1163
SBS	833

EQUIVALENT OE #	
OEM Suzuki	69101 44830
OEM Suzuki	69100 15830
OEM Suzuki	69101 44810
OEM Suzuki	69101 44820
OEM Suzuki	69100 15820

AGPP148						
MARCA Brand	MODELLO Model	CC	DA From	A To	ANT. Front	POST. Rear
SUZUKI	GSR 600	600	2006			X
SUZUKI	GSX-R 600 (RAD.CAL)	600	2006	2010		X
SUZUKI	GSX-R 750 (RAD.CAL)	750	2006	2010		X
SUZUKI	DL 1000 V-STROM	1000	2014			X
SUZUKI	GSX-R 1000 (RAD.CAL)	1000	2007	2008		X
SUZUKI	GSX-R 1300 HAYABUSA	1300	2008	2012		X
SUZUKI	GSX-R 1300 HAYABUSA (RAD.CAL)	1300	2013			X
SUZUKI	1340 B-KING	1340	2008			X

PASTIGLIE BRAKE PADS

APPLICAZIONI PER CODICE PASTIGLIA / applications for pads code

MESCOLA ORGANICA organic compound
OR

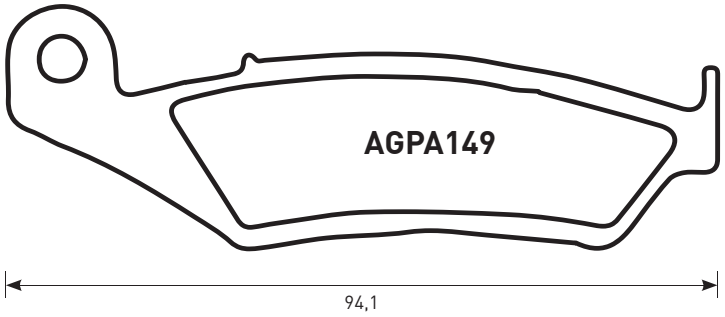

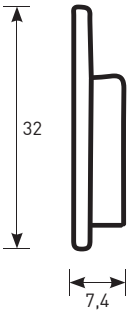

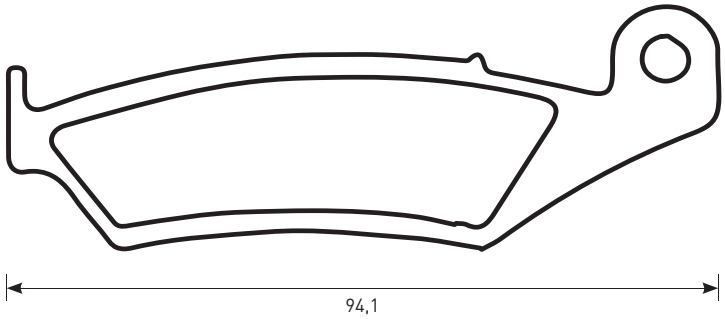

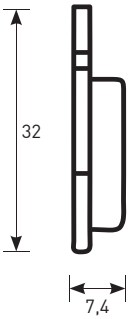

CROSS REFERENCE	
EBC	**FA125**
OGNIBENE	**215**
BRAKING	**700**
NEWFREN	**.FD.0120**
BREMBO	**07HO25**
FERODO	**FDB495**
CL	**2302**
SBS	**603**

EQUIVALENT OE #	
OEM Honda	**45105 KZ1 405**
OEM Honda	**45105 KW3 405**
OEM Honda	**45105 KW3 681**

AGPA149						
MARCA Brand	**MODELLO** Model	**CC**	**DA** From	**A** To	**ANT.** Front	**POST.** Rear
HONDA	**CRM 50 (MADE INSPAIN)**	**50**	**1993**	**1996**	**X**	
HONDA	**CRM 75 R**	**75**	**1990**	**1994**	**X**	
HONDA	**CR RH / RJ / RK 125**	**125**	**1987**	**1994**	**X**	
HONDA	**AX-1 250**	**250**	**1990**		**X**	
HONDA	**CR 250 R**	**250**	**1987**	**1994**	**X**	
HONDA	**CRM 250 R**	**250**	**1990**		**X**	
HONDA	**NX 250**	**250**	**1988**	**1990**	**X**	
HONDA	**TRX 250 R**	**250**	**1986**	**1989**	**X**	
HONDA	**TRX 250 X FOURTRAX**	**250**	**1987**		**X**	
HONDA	**XL 250 DEGREE**	**250**	**1991**		**X**	
HONDA	**XLR 250 R BAJA**	**250**	**1988**	**1990**	**X**	
HONDA	**XR 250 L**	**250**	**1991**	**1992**	**X**	
HONDA	**XR 250 R**	**250**	**1988**	**1995**	**X**	
HONDA	**ATC 350 X**	**350**	**1986**		**X**	
HONDA	**CR 500 R**	**500**	**1987**	**1994**	**X**	
HONDA	**XR 600 R**	**600**	**1988**	**1992**	**X**	

MESCOLA ORGANICA organic compound
OR

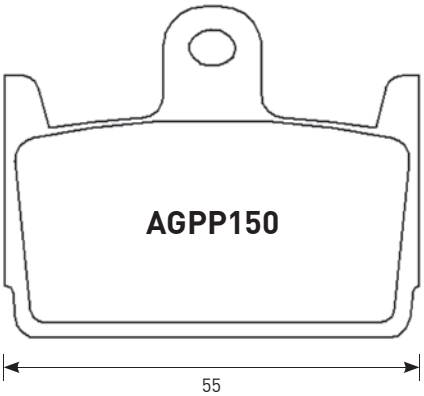

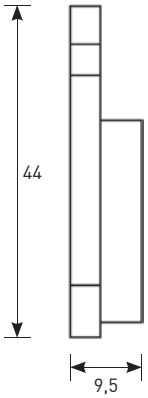

CROSS REFERENCE	
EBC	**FA234**
BRAKING	**774**
NEWFREN	**.FD.0224**
BREMBO	**7016**
FERODO	**FDB2101**
CL	**3041**
SBS	**129**

EQUIVALENT OE #	
OEM Honda	**06435 GCM 902**
OEM Sym	**45105 TFA 000A**

AGPP150						
MARCA Brand	**MODELLO** Model	**CC**	**DA** From	**A** To	**ANT.** Front	**POST.** Rear
HONDA	**SZX 50 X8R-S**	**50**	**1998**			**X**
HONDA	**SZX 50 X8R-X**	**50**	**1998**			**X**
KYMCO	**DD 50 SNIPER**	**50**	**1994**			**X**
KYMCO	**150 HEROISM**	**150**	**1995**			**X**
SYM	**50 JET SPORT X SR**	**50**	**2006**			**X**

ACCOSSATO

PASTIGLIE BRAKE PADS

APPLICAZIONI PER CODICE PASTIGLIA / applications for pads code

MESCOLA ORGANICA organic compound
OR

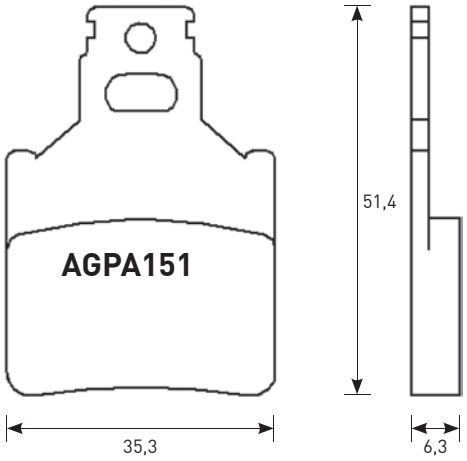

CROSS REFERENCE	
EBC	FA060
BRAKING	648
NEWFREN	.FD.0048
BREMBO	07BB1310
FERODO	FDB694
CL	3037
SBS	574

EQUIVALENT OE #	
OEM KTM	46013090000

AGPA151						
MARCA Brand	MODELLO Model	CC	DA From	A To	ANT. Front	POST. Rear
APRILIA	AF-1		1988			X
APRILIA	50 TUAREG	50	1986			X
APRILIA	50 TUAREG RALLY	50	1990			X
APRILIA	125 STRADA	125	1985			X
APRILIA	125 TUAREG WIND	125	1988			X
APRILIA	240 CLIMBER	240	1989	1990		X
APRILIA	275 CLIMBER	275	1989	1990		X
BETA	350 4.0 MOTARD	350	2004			X
BETA	ALP 350 4.0	350	2004	2005		X

AGPA151						
MARCA Brand	MODELLO Model	CC	DA From	A To	ANT. Front	POST. Rear
CAGIVA	50 LUCKY EXPLORER	50	1988			X
CAGIVA	80 COCIS	80	1991			X
CAGIVA	125 ALETTA ELECTRA	125	1983	1986	X	
CAGIVA	125 ALETTA ORO	125			X	X
CAGIVA	125 CRUISER	125				X
CAGIVA	125 E2	125	1986		X	
CAGIVA	125 ELEFANT	125	1981		X	
CAGIVA	125 SST	125	1981		X	
CAGIVA	125 TAMANACO	125				X
CAGIVA	125 WSTX ALETTA ROSSA	125	1983		X	
CAGIVA	N90 125	125	1991			X
CAGIVA	200 ALETTA ELECTRA	200	1983		X	
CAGIVA	200 CROSS	200	1983		X	
FANTIC	50 .1 OASIS	50	1983		X	X
FANTIC	50 .1 RAIDER RALLY	50	1987		X	
FANTIC	50 KOALA	50	1990		X	X
FANTIC	50 OASIS	50	1990			X
FANTIC	75 OASIS	75	1989			X
FANTIC	125 RAIDER	125			X	
FANTIC	HP1 125 SPORT	125	1987		X	
GARELLI	125 TIGER XLE	125	1986			X
GILERA	X1 125	125	1989			X
GILERA	NGR 250	250	1985		X	
JCM	233 VEGA	233	1988			X
JCM	325 EUROPA	325	1989			X
JCM	333 VEGA	333	1988			X
KTM	SX 65	65	2000	2003		X
LAVERDA	125 FORMULA	125	1986		X	
LAVERDA	GS 125 LESMO	125	1986		X	X
LAVERDA	GS 125 LESMO	125	1990		X	X
LAVERDA	LB 125 STRADA, SPORT	125	1985		X	
MALAGUTI	50 EVOLUTION	50	1991		X	
MALAGUTI	ES 50 DUNE	50	1989		X	X
MALAGUTI	MDX 50	50	1986		X	
MALAGUTI	RST 50 SPORT	50			X	X
MALANCA	E2 125	125			X	X
MALANCA	E2 C80	80			X	X
MALANCA	E2 CS OB ONE 5N, 6N, RACING				X	X
MALANCA	E2 SPORT				X	X
MALANCA	GTI 80	80			X	X
MALANCA	GTI 125	125			X	X
ZUNDAPP	KS 80 SUPER	80	1980		X	

PASTIGLIE BRAKE PADS

APPLICAZIONI PER CODICE PASTIGLIA / applications for pads code

MESCOLA ORGANICA organic compound
OR

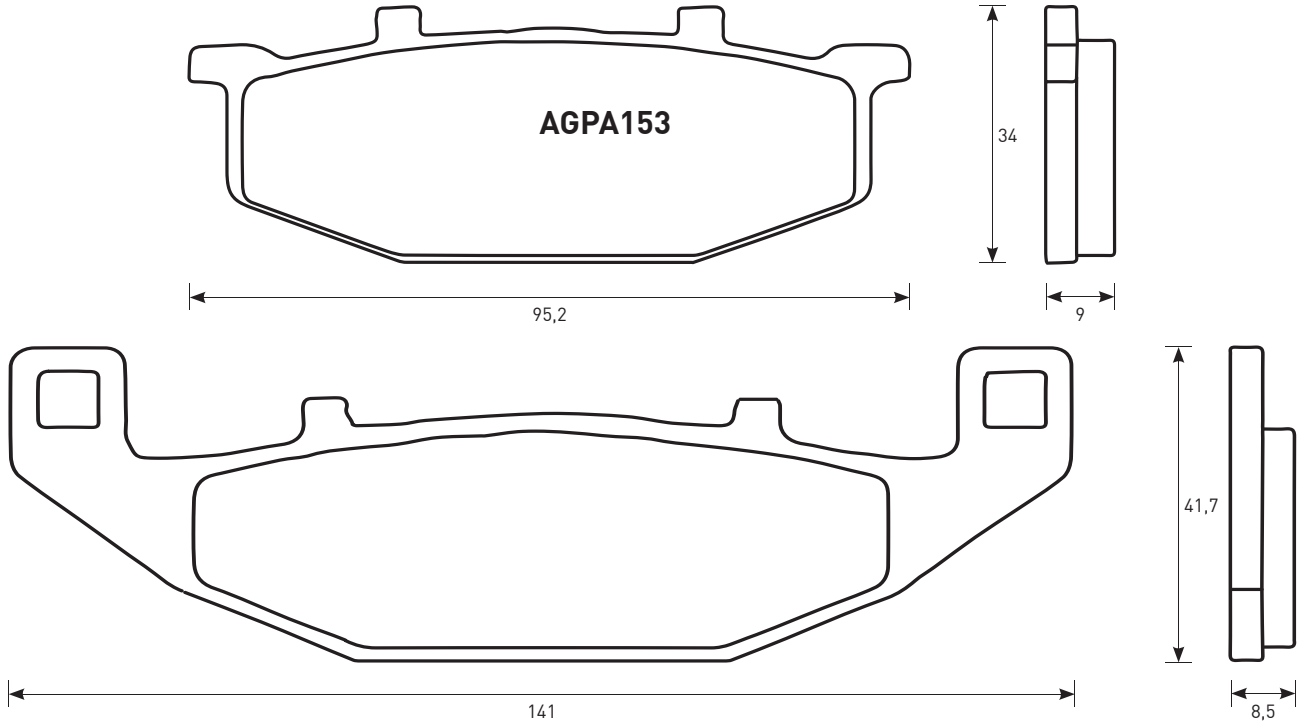

CROSS REFERENCE	
EBC	FA129
OGNIBENE	252
BRAKING	698
NEWFREN	.FD.0108
BREMBO	07KA0933
FERODO	FDB481
CL	2304
SBS	597

EQUIVALENT OE #	
OEM Kawasaki	43082 1189
OEM Kawasaki	43082 1139
OEM Kawasaki	43082 1123
OEM Kawasaki	43082 1134
OEM Kawasaki	43082 1114
OEM Suzuki	59300 33860
OEM Suzuki	59100 26810
OEM Suzuki	59301 45860

AGPA153						
MARCA Brand	MODELLO Model	CC	DA From	A To	ANT. Front	POST. Rear
HYOSUNG	GT 250 COMET	250	2002		X	
HYOSUNG	600 COMET	600	2002		X	
KAWASAKI	EX 250 R NINJA F2-F17	250	1988	2007	X	
KAWASAKI	GPX 250 R	250	1988		X	
KAWASAKI	ZR 250 BALIUS	250	1991	1995	X	
KAWASAKI	ZZR 250	250	1990	2001	X	
KAWASAKI	400 ELIMINATOR	400	1994		X	
KAWASAKI	EX-4 400	400	1995		X	
KAWASAKI	GPX 400	400	1987			X
KAWASAKI	GPZ 400 R	400	1989			X
KAWASAKI	GPZ 400 S	400	1988		X	
KAWASAKI	KLE 400	400	1991		X	
KAWASAKI	ZZR 400	400	1990	1994		X
KAWASAKI	ER-5 500	500	1997	2000	X	
KAWASAKI	EX 500 A1-A3	500	1987	1989	X	
KAWASAKI	EX 500 A4-A7	500	1990	1993	X	
KAWASAKI	EX 500 D1-D3 NINJA	500	1994	1997	X	
KAWASAKI	GPX 500 R (AUSTRIA)	500	1988		X	X
KAWASAKI	GPZ 500 S (AUSTRIA)	500	1987	1993	X	
KAWASAKI	KL 500 TENGAI (AUSTRIA)	500	1989	1991	X	
KAWASAKI	KLE 500 A1-	500	1991		X	
KAWASAKI	ZZR 500 (AUSTRIA)	500	1990	1992		X

AGPA153						
MARCA Brand	MODELLO Model	CC	DA From	A To	ANT. Front	POST. Rear
KAWASAKI	ZR 550 B1-B3 ZEPHYR	550	1990	1992	X	
KAWASAKI	ZR 550 B4-B6 ZEPHYR	550	1993	1999	X	
KAWASAKI	GPX 600 R	600	1988	1994	X	X
KAWASAKI	GPZ 600 R	600	1994		X	X
KAWASAKI	ZL 600 B2 ELIMINATOR	600	1995	1998	X	
KAWASAKI	ZX 600 C1-C10 NINJA R	600	1988	1997	X	X
KAWASAKI	ZX-6R 600 D1-D4 (ZX6)	600	1990	1993		X
KAWASAKI	ZZR 600	600	1990	1992		X
KAWASAKI	KLR 650 B1-B3 TENGAI	650	1989	1991	X	
KAWASAKI	GPX 750 R	750	1987	1989	X	X
KAWASAKI	ZR 750 ZEPHYR	750	1991	1995	X	X
KAWASAKI	ZR 750 ZEPHYR LEFT/REAR	750	1996			X
KAWASAKI	GPZ 900 R	900	1990	1996		X
KAWASAKI	GTR 1000	1000	1994	2006	X	
KAWASAKI	ZX-10 1000 B2, B3	1000	1988	1990	X	X
KAWASAKI	1100 ZEPHYR LEFT/REAR	1100	1997			X
KAWASAKI	ZR 1100 ZEPHYR	1100	1992	1995		X
KAWASAKI	ZZR 1100	1100	1990	1993		X
SUZUKI	RG 125 WOLF	125	1992	1994	X	
SUZUKI	200 WOLF	200	1992		X	
SUZUKI	250 ACROSS	250	1990		X	
SUZUKI	250 BANDIT	250	1990	1996	X	
SUZUKI	250 DJEBEL	250	1993		X	
SUZUKI	GSX 250 S, KATANA	250	1991		X	
SUZUKI	SW1 250	250	1992		X	
SUZUKI	GSF 400 BANDIT	400	1991	1992	X	
SUZUKI	GS 450 E	450	1990		X	X
SUZUKI	GS 500 E	500	1989	1995	X	
SUZUKI	DR 800 S, BIG	800	1991	1995	X	
SUZUKI	VX 800 L-P	800	1990	1993	X	
SUZUKI	GSX 1100 G	1100	1994	1995	X	
SUZUKI	GSX 1100 GM,GN,GP	1100	1991	1993	X	

PASTIGLIE BRAKE PADS

APPLICAZIONI PER CODICE PASTIGLIA / applications for pads code

MESCOLA ORGANICA organic compound
OR

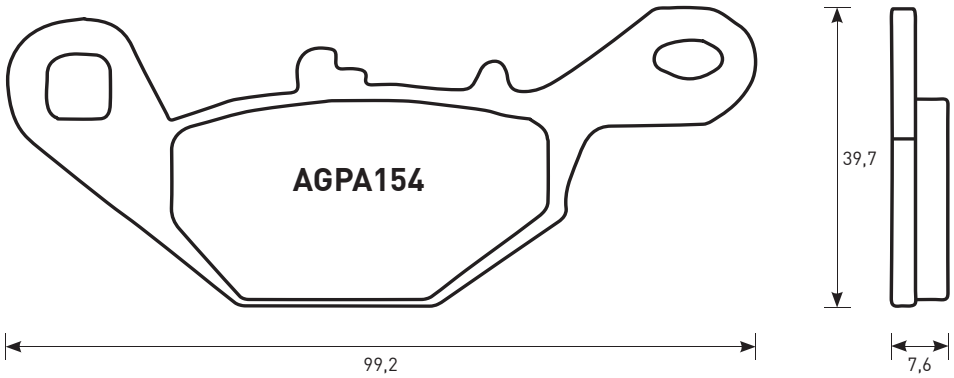

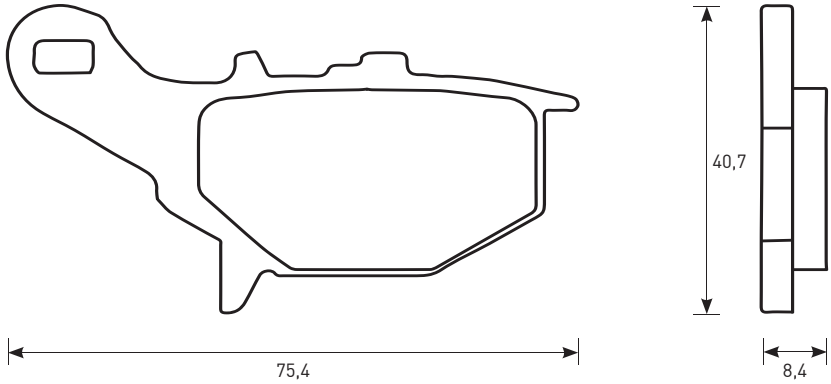

CROSS REFERENCE	
EBC	FA396
OGNIBENE	279
BRAKING	785
NEWFREN	.FD.0222
BREMBO	7036
FERODO	FDB2133
CL	2914
SBS	122/702

EQUIVALENT OE #	
OEM Suzuki	59300 03880

AGPA154						
MARCA Brand	MODELLO Model	CC	DA From	A To	ANT. Front	POST. Rear
SUZUKI	AN 50	50	1995		X	
SUZUKI	TR 50 STREET MAGIC	50	1997		X	

AGPA154						
MARCA Brand	MODELLO Model	CC	DA From	A To	ANT. Front	POST. Rear
SUZUKI	RM 80	80	1996	2001	X	
SUZUKI	RM 85 , L	85	2001	2004	X	
SUZUKI	AH 100 V ADRESS	100	1995		X	
SUZUKI	UG 110 HOKUTO	110	2000		X	
SUZUKI	125 VECSTAR	125	1994		X	
SUZUKI	AH 125 V ADRESS	125	1995		X	
SUZUKI	AN 125 R	125	1994		X	
SUZUKI	DR-Z 125 L	125	2003		X	
SUZUKI	UC 125 EPICURO	125	1999		X	
SUZUKI	AN 150	150	1998		X	
SUZUKI	UC 150 EPICURO	150	1999		X	
SUZUKI	250 VECSTAR	250	1994		X	

PASTIGLIE BRAKE PADS

APPLICAZIONI PER CODICE PASTIGLIA / applications for pads code

MESCOLA ORGANICA organic compound
OR

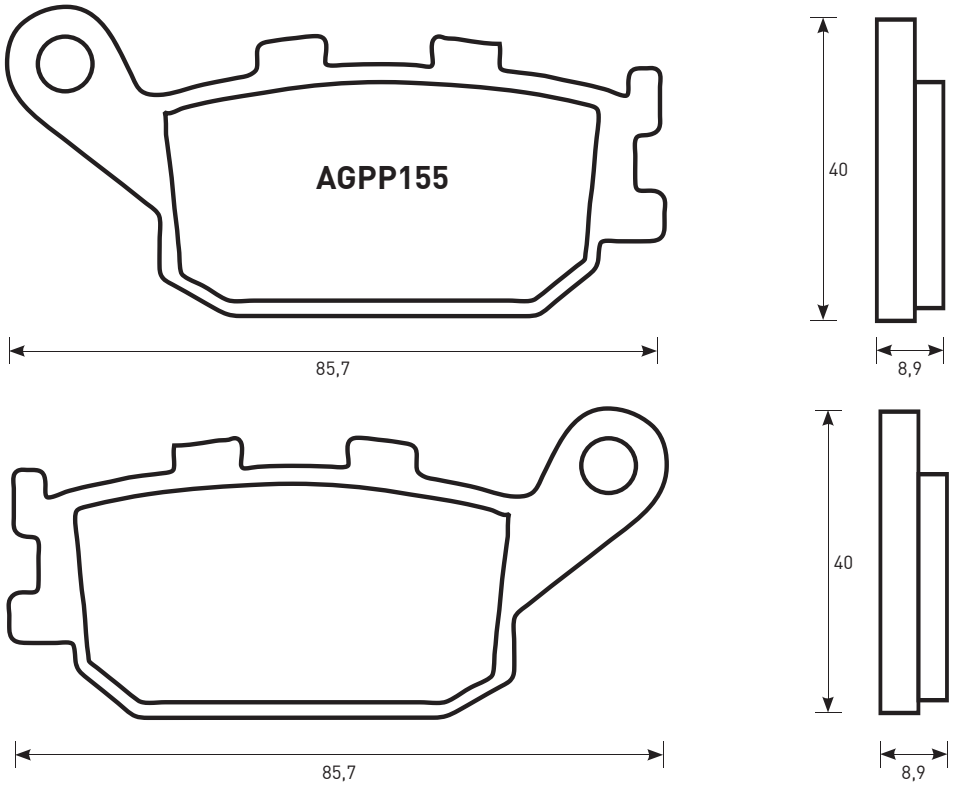

CROSS REFERENCE	
EBC	FA358
OGNIBENE	244
NEWFREN	.FD.0324
BREMBO	7053
FERODO	FDB2130
CL	3079
SBS	158

EQUIVALENT OE #	
OEM Honda	06435 KPB 016
OEM Honda	06435 KPB 026

AGPP155						
MARCA Brand	MODELLO Model	CC	DA From	A To	ANT. Front	POST. Rear
HONDA	JAZZ 250	250	2001			X
HONDA	NSS 250	250	2000	2004		X
HONDA	NSS FORZA 250	250	2000	2004		X

MESCOLA ORGANICA E SINTERIZZATA organic and sintered compound
OR / ST

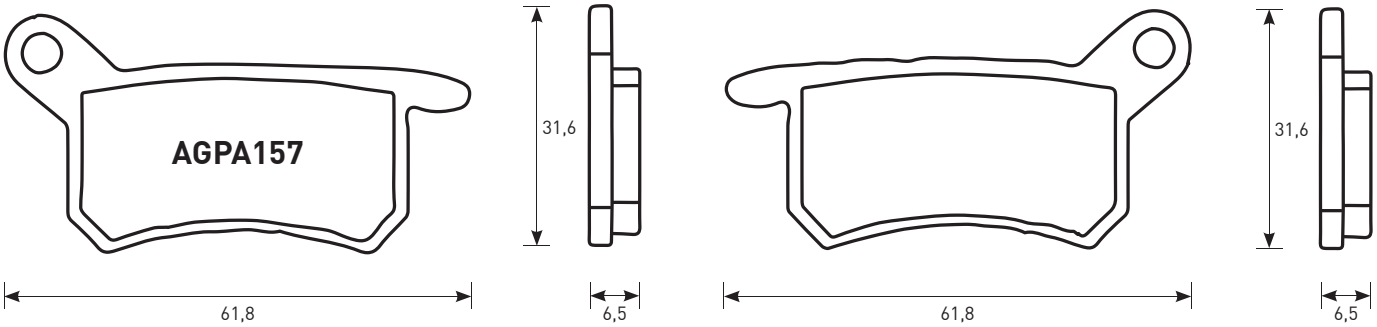

CROSS REFERENCE	
EBC	FA357
BRAKING	873
NEWFREN	.FD.0354
BREMBO	07GR69
FERODO	FDB2157
CL	1078
SBS	783

EQUIVALENT OE #	
OEM KTM	46113030000

AGPA157						
MARCA Brand	MODELLO Model	CC	DA From	A To	ANT. Front	POST. Rear
HUSQVARNA	CR 65	65	2012		X	
KTM	SX 65	65	2002	2003	X	
KTM	SX 65	65	2004	2009	X	X
KTM	SX 85	85	2004	2010	X	X
KTM	SX 85	85	2011		X	

PASTIGLIE BRAKE PADS

APPLICAZIONI PER CODICE PASTIGLIA / applications for pads code

MESCOLA ORGANICA organic compound
OR

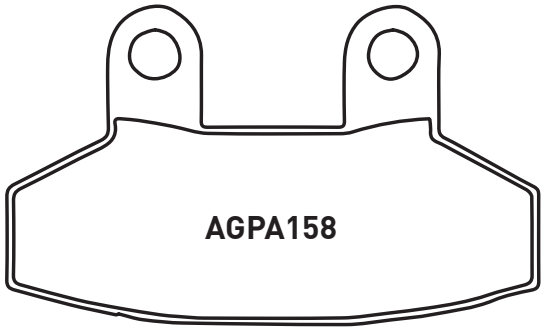

CROSS REFERENCE	
EBC	FA306
NEWFREN	.FD.0293
BREMBO	7062
FERODO	FDB2108
CL	3067
SBS	178/792

EQUIVALENT OE #	
OEM Sym	45105 H3A 900A
OEM Sym	45105 H3A 000A

AGPA158						
MARCA Brand	MODELLO Model	CC	DA From	A To	ANT. Front	POST. Rear
LAVERDA	PHOENIX 125	125	2001		X	
LAVERDA	PHOENIX 150	150	2001		X	
LAVERDA	PHOENIX 200	200	2001		X	
RIEJU	RS2 125 PRO	125	2008		X	
SYM	RS 50	50	2005		X	

AGPA158						
MARCA Brand	MODELLO Model	CC	DA From	A To	ANT. Front	POST. Rear
SYM	RS21 50	50	2002		X	
SYM	125 EURO MX	125	2003		X	
SYM	125 JOYRIDE	125	2001	2009	X	
SYM	125 JOYRIDE EVO	125	2010	2005	X	
SYM	125 Joyride S	125	2016		X	
SYM	RS 125	125	2005		X	
SYM	RS21 125 , R	125	2002		X	
SYM	VS 125	125	2009		X	
SYM	150 EURO MX	150	2003		X	
SYM	150 JOYRIDE	150	2001		X	
SYM	RS 150	150	2005		X	
SYM	200 JOYRIDE	200	2001		X	
SYM	200 JOYRIDE S	200	2016		X	

MESCOLA ORGANICA organic compound
OR

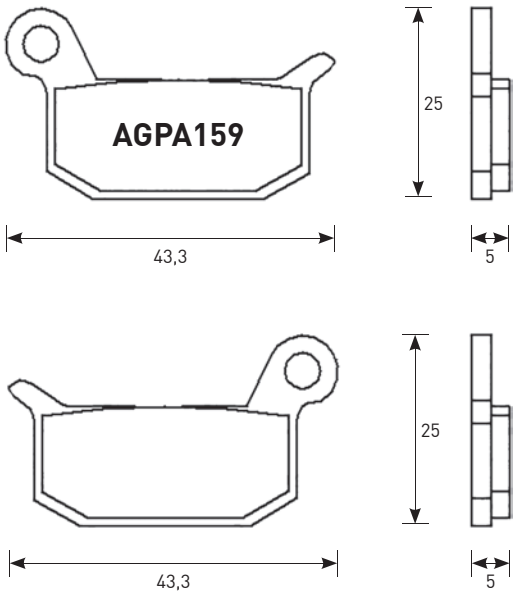

CROSS REFERENCE	
EBC	FA325
NEWFREN	.FD.0372
BREMBO	07GR70
FERODO	FDB2183
CL	1128
SBS	794

EQUIVALENT OE #	
OEM KTM	45113030000

AGPA159						
MARCA Brand	MODELLO Model	CC	DA From	A To	ANT. Front	POST. Rear
HUSQVARNA	CR 50 PRO SENIOR	50	2006			X
HUSQVARNA	CR 50 SENIOR	50	2006			X
HUSQVARNA	SM 50	50	2010			X
KTM	SM 50 SUPERMOTO	50	2006		X	X
KTM	SX 50 PRO JUNIOR LC	50	2002		X	
KTM	SX 50 PRO SENIOR LC	50	2002	2003	X	
KTM	SX 50 PRO SENIOR LC	50	2004		X	X
KTM	SX 50 SENIOR ADVENTURE	50	2004		X	
KTM	SX 65	65	2004	2008		X
LEM	50 CX2, CX3, RX2, RX3	50	2003		X	X
LEM	50 R2, R3, R3 XC	50	2003		X	X
LEM	RX 65	65	2005		X	X
LEM	RX 150	150	2011			X
POLINI	X1 50 R	50	2004		X	X
POLINI	X3 50 R	50	2004		X	X
POLINI	X5 65 RP	65	2005		X	X

PASTIGLIE BRAKE PADS

APPLICAZIONI PER CODICE PASTIGLIA / applications for pads code

MESCOLA ORGANICA organic compound
OR

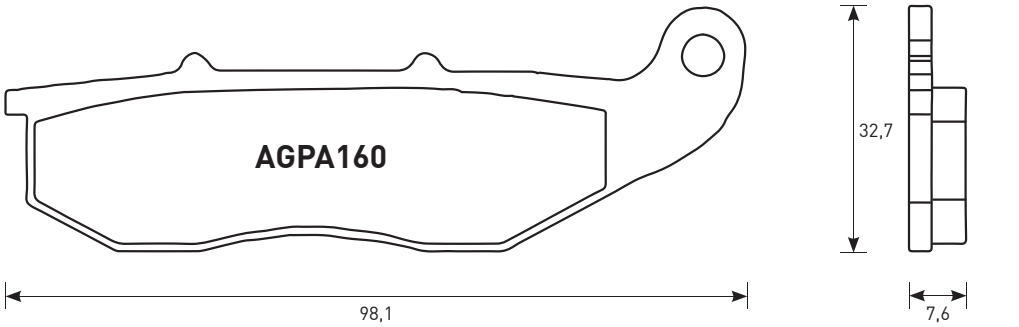

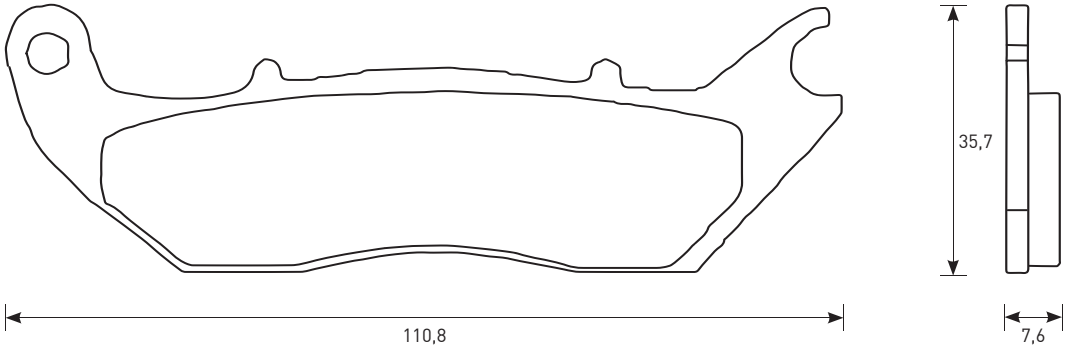

CROSS REFERENCE	
EBC	**FA375**
BRAKING	**902**
NEWFREN	**.FD.0355**
BREMBO	**07HO5606**
FERODO	**FDB2169**
CL	**1148**
SBS	**797**

EQUIVALENT OE #	
OEM Honda	**06455 KPP 901**
OEM Honda	**06455 KPP 902**

AGPA160						
MARCA Brand	**MODELLO** Model	**CC**	**DA** From	**A** To	**ANT.** Front	**POST.** Rear
HONDA	**CBF 125**	**125**	**2009**		**X**	
HONDA	**CBR 125 R**	**125**	**2004**	**2011**	**X**	
HONDA	**MSX 125**	**125**	**2014**		**X**	
HONDA	**CBR 150 R**	**150**	**2000**	**2004**	**X**	
RIEJU	**RS2 125 NKD**	**125**	**2006**		**X**	

MESCOLA ORGANICA organic compound
OR

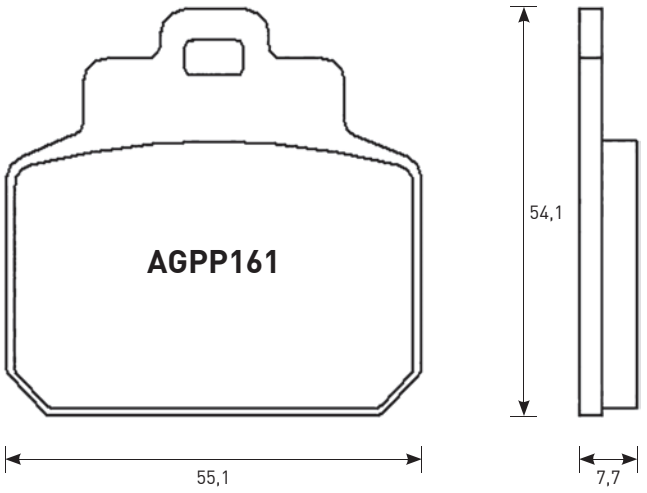

CROSS REFERENCE	
EBC	**FA425**
BRAKING	**909**
NEWFREN	**.FD.0394**
BREMBO	**7059**
FERODO	**FDB2207**
CL	**3084**
SBS	**191**

EQUIVALENT OE #	
OEM Piaggio	**647400**

AGPP161						
MARCA Brand	**MODELLO** Model	**CC**	**DA** From	**A** To	**ANT.** Front	**POST.** Rear
GILERA	**RC 500 FUOCO IE**	**500**	**2008**			**X**
PIAGGIO	**125 MP3**	**125**	**2006**	**2007**		**X**
PIAGGIO	**125 X8**	**125**	**2005**	**2010**		**X**
PIAGGIO	**200 X8**	**200**	**2005**			**X**
PIAGGIO	**250 MP3**	**250**	**2006**	**2007**		**X**
PIAGGIO	**250 X8**	**250**	**2006**			**X**
PIAGGIO	**250 X9 LEFT/REAR**	**250**	**2005**			**X**

ACCOSSATO

PASTIGLIE BRAKE PADS

APPLICAZIONI PER CODICE PASTIGLIA / applications for pads code

MESCOLA ORGANICA organic compound
OR

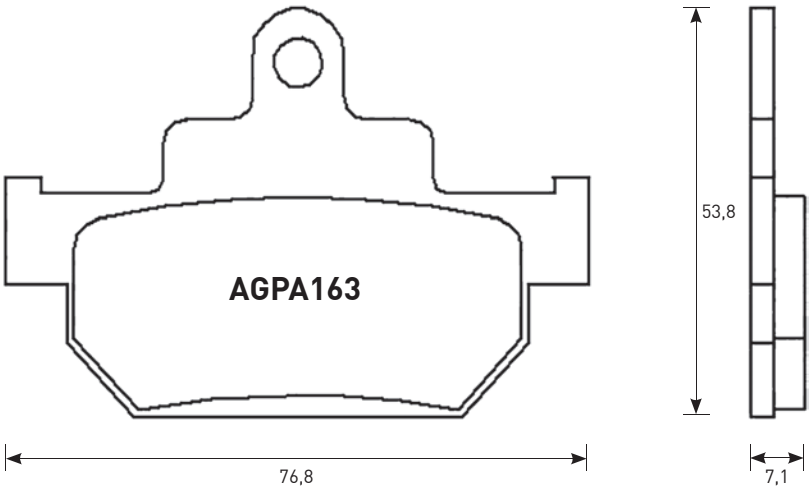

CROSS REFERENCE	
EBC	FA106
BRAKING	817
NEWFREN	.FD.0092
BREMBO	07SU0904
FERODO	FDB404
CL	2387
SBS	581

EQUIVALENT OE #	
OEM Suzuki	59300 24830
OEM Suzuki	59100 26820

AGPA163						
MARCA Brand	MODELLO Model	CC	DA From	A To	ANT. Front	POST. Rear
MAICO	GM 250 STAR	250	1986		X	X
MAICO	GP 250 E	250	1987		X	X
MAICO	GP 250 MOTOCROSS	250	1987		X	X
MAICO	GP 400 E	400	1987		X	X
MAICO	GP 400 MOTOCROSS	400	1987		X	X
MAICO	GM 500 STAR	500	1986		X	X

AGPA163						
MARCA Brand	MODELLO Model	CC	DA From	A To	ANT. Front	POST. Rear
MAICO	GP 500 E	500	1987		X	X
MAICO	GP 500 MOTOCROSS	500	1987		X	X
MAICO	GP 550	550	1987		X	X
SUZUKI	GZ 125 MARAUDER	125	2000	2003	X	
SUZUKI	RM 125 F,G	125	1985	1986	X	
SUZUKI	VL 125 INTRUDER LC	125	2000	2002	X	
SUZUKI	GZ 250 MARAUDER	250	2000		X	
SUZUKI	RM 250 F	250	1985		X	
SUZUKI	TU 250 X SUPER CLASSIC	250	1997		X	
SUZUKI	VL 250 INTRUDER	250	2000		X	
SUZUKI	LS 400 SAVAGE	400	1987		X	
SUZUKI	RM 500	500	1985	1986	X	
SUZUKI	LS 650	650	2005		X	
SUZUKI	LS 650 P	650	1986	1988	X	
SUZUKI	LS 650 P SAVAGE	650	1995	2004	X	

MESCOLA ORGANICA organic compound
OR

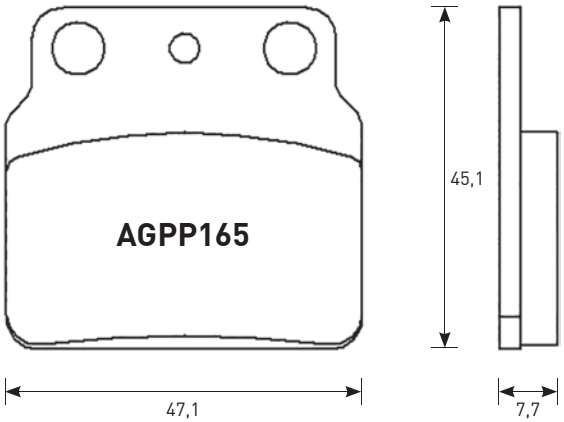

CROSS REFERENCE	
EBC	FA137
NEWFREN	.FD.0145
BREMBO	07SU2906
FERODO	FDB2016
SBS	649

EQUIVALENT OE #	
OEM Suzuki	69100 01810
OEM Suzuki	69100 07810

AGPP165						
MARCA Brand	MODELLO Model	CC	DA From	A To	ANT. Front	POST. Rear
ARCTIC CAT	400 DVX	400	2004			X
HYOSUNG	TE 400	400	2005	2006		X
HYOSUNG	TE 450	450	2007			X
KAWASAKI	KFX 400	400	2002			X
SUZUKI	LT 250 RJ-RR	250	1988	1994		X
SUZUKI	LT-Z 400 QUAD SPORT	400	2002			X
SUZUKI	LT-R 450 LEFT/REAR	450	2006			X
SUZUKI	LT 500 RH-RR	500	1987	1995		X

PASTIGLIE BRAKE PADS

APPLICAZIONI PER CODICE PASTIGLIA / applications for pads code

MESCOLA ORGANICA organic compound
OR

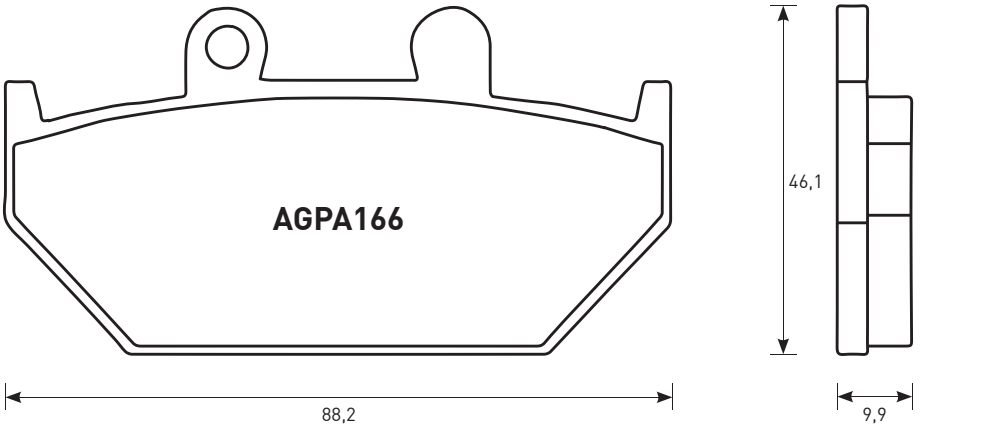

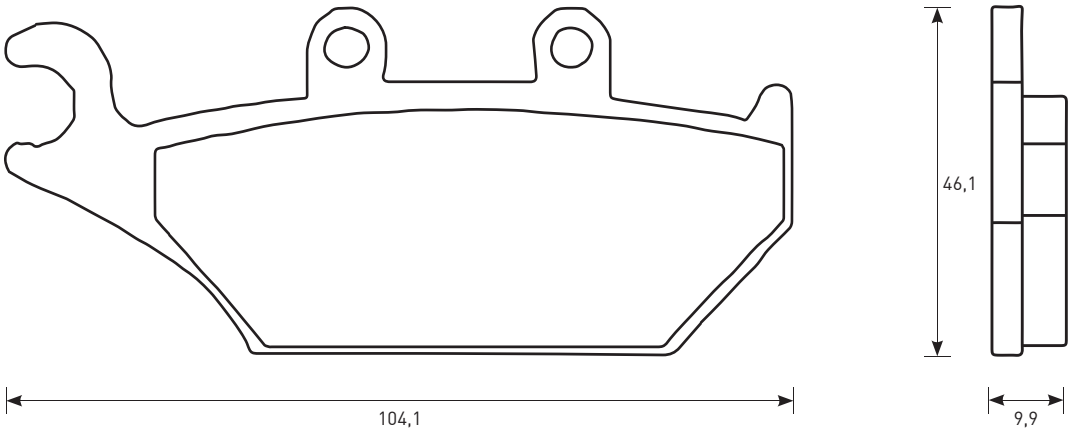

CROSS REFERENCE	
EBC	**FA172**
OGNIBENE	**231**
BRAKING	**737**
NEWFREN	**.FD.0167**
BREMBO	**07YA2508**
FERODO	**FDB737**
CL	**2360**
SBS	**650**

EQUIVALENT OE #	
OEM Yamaha	**3YF W0045 00**
OEM Yamaha	**3TB W0045 00**
OEM Yamaha	**4PT W0045 00**

AGPA166						
MARCA Brand	**MODELLO** Model	**CC**	**DA** From	**A** To	**ANT.** Front	**POST.** Rear
YAMAHA	**400 ARTESIA**	**400**	**1991**		**X**	
YAMAHA	**XT 500 E (AUSTRIA)**	**500**	**1990**	**1996**	**X**	
YAMAHA	**XT 600 E**	**600**	**1990**		**X**	
YAMAHA	**XT 600 K**	**600**	**1991**		**X**	
YAMAHA	**XTZ 660 TENERE**	**660**	**1991**	**1998**	**X**	

ACCOSSATO

PASTIGLIE BRAKE PADS

APPLICAZIONI PER CODICE PASTIGLIA / applications for pads code

MESCOLA ORGANICA organic compound
OR

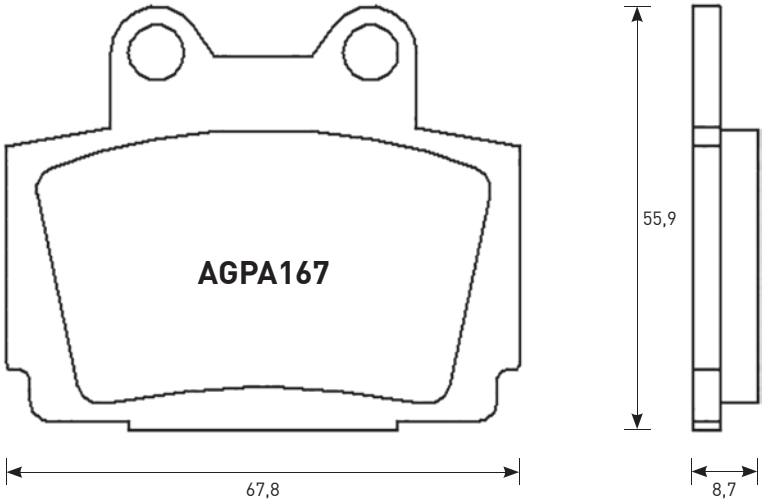

CROSS REFERENCE	
EBC	FA104
OGNIBENE	209
BRAKING	679
NEWFREN	.FD.0082
BREMBO	07YA1207
FERODO	FDB386
CL	2301
SBS	570

EQUIVALENT OE #	
OEM Yamaha	51L W0046 02
OEM Yamaha	3TJ W0046 00
OEM Yamaha	51L W0045 02

AGPA167						
MARCA Brand	MODELLO Model	CC	DA From	A To	ANT. Front	POST. Rear
YAMAHA	FRZ 50	50	1990			X
YAMAHA	TZR 80	80		1991	X	
YAMAHA	RD LC 125	125	1985	1987	X	
YAMAHA	TZR 125	125	1987	1988	X	
YAMAHA	TZR 125	125	1989	1992		X
YAMAHA	TZR 125 R	125	1994			X
YAMAHA	SDR 200	200	1988	1989	X	X
YAMAHA	FZ 250 R	250	1985		X	
YAMAHA	FZR 250	250	1987	1988		X
YAMAHA	FZR 250 R	250	1989			X
YAMAHA	FZX 250 ZEAL	250	1991	1992		X
YAMAHA	R1-Z 250	250	1990	1988		X
YAMAHA	RZ 250 RR	250	1988		X	X
YAMAHA	RZR 250	250	1990		X	X
YAMAHA	SRX 250	250	1984		X	

AGPA167						
MARCA Brand	MODELLO Model	CC	DA From	A To	ANT. Front	POST. Rear
YAMAHA	SRX 250 T, TC	250	1987		X	
YAMAHA	TDR 250	250	1988	1992		X
YAMAHA	TZR 250	250	1987	1992		X
YAMAHA	RD 350 LC	350	1985		X	X
YAMAHA	RD 350 LC, F	350	1985	1990	X	X
YAMAHA	RD 350 R	350	1991	1995	X	X
YAMAHA	RZ 350 F	350	1986	1988	X	X
YAMAHA	FZ 400 N	400	1987			X
YAMAHA	FZ 400 R	400	1985		X	X
YAMAHA	FZR 400	400	1987	1990		X
YAMAHA	FZR 400 A	400		1990		X
YAMAHA	FZR 400 R	400	1991			X
YAMAHA	SRX 400	400	1985	1987		X
YAMAHA	XJ 400 DIVERSION	400	1991			X
YAMAHA	RD 500 LC	500	1984	1986		X
YAMAHA	RZ 500	500	1984	1986		X
YAMAHA	FZ 600 S, SC	600	1986			X
YAMAHA	FZS 600 FAZER	600	1998	2003		X
YAMAHA	FZS 600 S FAZER	600	2001	2003		X
YAMAHA	SRX 600	600	1986	1987	X	X
YAMAHA	SRX 600	600	1988	1990		X
YAMAHA	XJ 600 N	600	1991	1998		X
YAMAHA	XJ 600 S DIVERSION	600	1991	2003		X
YAMAHA	FZ 750 GENESIS	750	1986			X

PASTIGLIE BRAKE PADS

APPLICAZIONI PER CODICE PASTIGLIA / applications for pads code

MESCOLA ORGANICA organic compound
OR

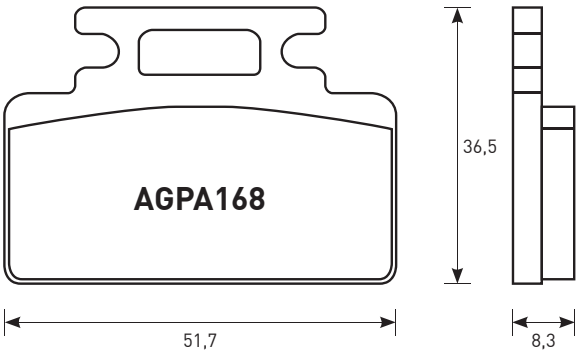

CROSS REFERENCE	
EBC	**FA151**
BRAKING	**721**
NEWFREN	**.FD.0139**
BREMBO	**7031**
FERODO	**FDB2192**
CL	**2287**
SBS	**618**

EQUIVALENT OE #	
OEM Yamaha	**5KM W0046 00**

AGPA168						
MARCA Brand	**MODELLO** Model	**CC**	**DA** From	**A** To	**ANT.** Front	**POST.** Rear
MEGELLI	**125 M**	**125**	**2008**			**X**
HONDA	**LEAD 50**	**50**	**1986**	**1993**	**X**	
HONDA	**R MONKEY 50**	**50**	**1988**		**X**	
HONDA	**SZX LEAD SCOOTER 50**	**50**	**1986**		**X**	
HONDA	**ZX LEAD 50**	**50**	**1988**		**X**	
HONDA	**R LEAD 125**	**125**	**1988**		**X**	
HONDA	**125 NS**	**125**	**1989**			**X**
HONDA	**125 RS R**	**125**	**1991**	**1994**		**X**
HONDA	**125 RS R**	**125**	**1995**			**X**
HONDA	**250 NS**	**250**	**1989**			**X**
HONDA	**250 RS R**	**250**	**1991**	**1993**		**X**
KYMCO	**MANBOY 50**	**50**	**1995**		**X**	
KYMCO	**ZAP 50**	**50**	**1995**		**X**	
KYMCO	**SP YUP 90**	**90**	**1995**		**X**	
SYM	**BULLET 50**	**50**	**1993**		**X**	
SYM	**CINDERELLA 50**	**50**	**1999**		**X**	
SYM	**50 DD**	**50**	**2002**		**X**	
SYM	**MIO 50**	**50**	**2005**		**X**	
SYM	**CINDERELLA 100**	**100**	**2001**		**X**	
SYM	**MIO 100**	**100**	**2005**		**X**	
SYM	**BULLET 110**	**110**	**1993**		**X**	

MESCOLA ORGANICA organic compound
OR

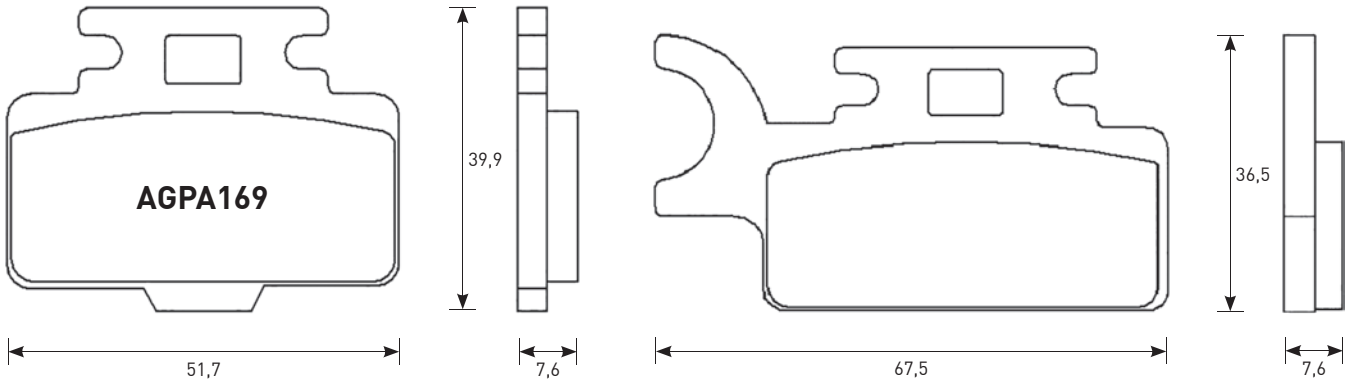

CROSS REFERENCE	
EBC	**FA302**
BRAKING	**894**
NEWFREN	**.FD.0295**
BREMBO	**07KA27SD**
FERODO	**FDB2110**
CL	**1034**
SBS	**752**

EQUIVALENT OE #	
OEM Kawasaki	**43082 1242**
OEM Kawasaki	**K43082 1242**
OEM Kawasaki	**K43082 0042**

AGPA169						
MARCA Brand	**MODELLO** Model	**CC**	**DA** From	**A** To	**ANT.** Front	**POST.** Rear
KAWASAKI	**KX 65**	**65**	**2000**		**X**	
SUZUKI	**RM 65**	**65**	**2003**		**X**	

PASTIGLIE BRAKE PADS

APPLICAZIONI PER CODICE PASTIGLIA / applications for pads code

MESCOLA ORGANICA organic compound
OR

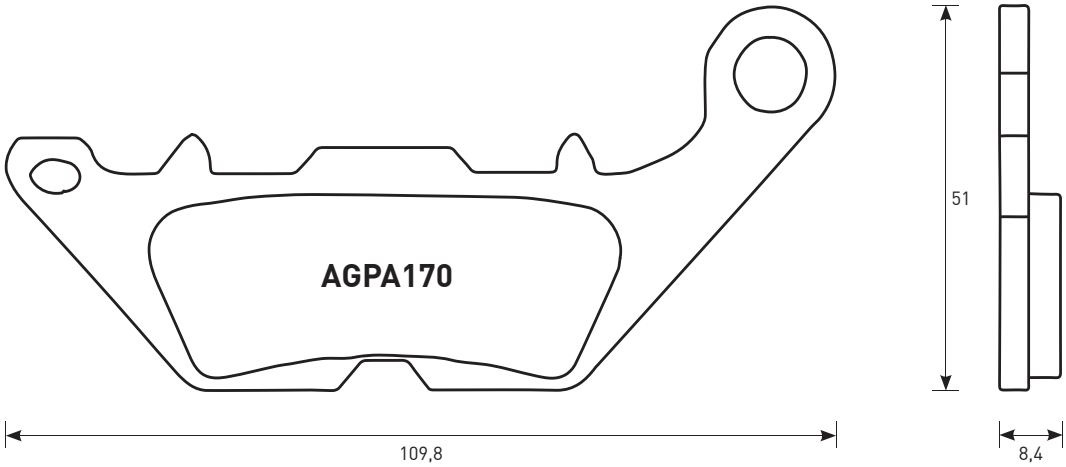

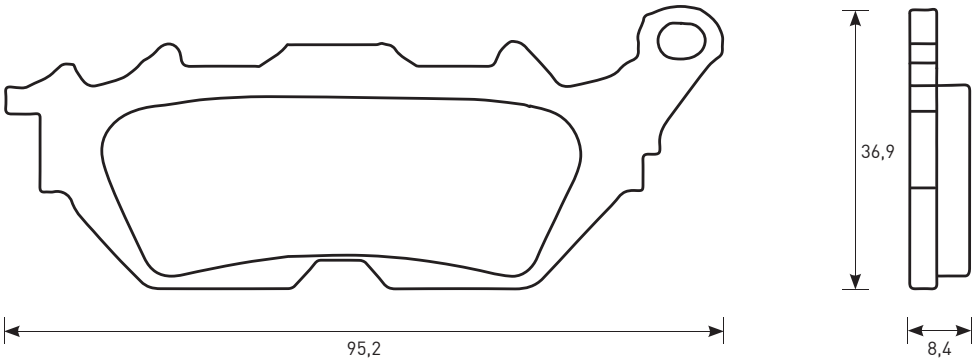

CROSS REFERENCE	
EBC	FA464
NEWFREN	.FD.0437
FERODO	FDB2238
CL	1224/3099
SBS	858

EQUIVALENT OE #	
OEM Yamaha	4S5 W0045 00
OEM Yamaha	4C9 W0045 00

AGPA170						
MARCA Brand	MODELLO Model	CC	DA From	A To	ANT. Front	POST. Rear
MBK	XC 125 WAAP	125	2008		X	
YAMAHA	115 D'ELIGHT	115	2014		X	
YAMAHA	XC 125 VITY	125	2008		X	
YAMAHA	YBR 125	125	2008		X	
YAMAHA	135 CRYPTON X	135	2008		X	
YAMAHA	300 R3	300	2015		X	X

PASTIGLIE BRAKE PADS

APPLICAZIONI PER CODICE PASTIGLIA / applications for pads code

MESCOLA ORGANICA organic compound
OR

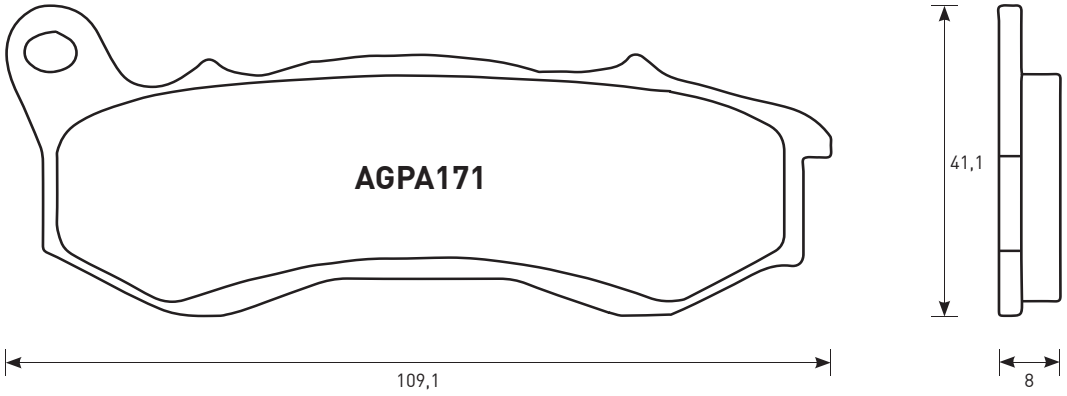

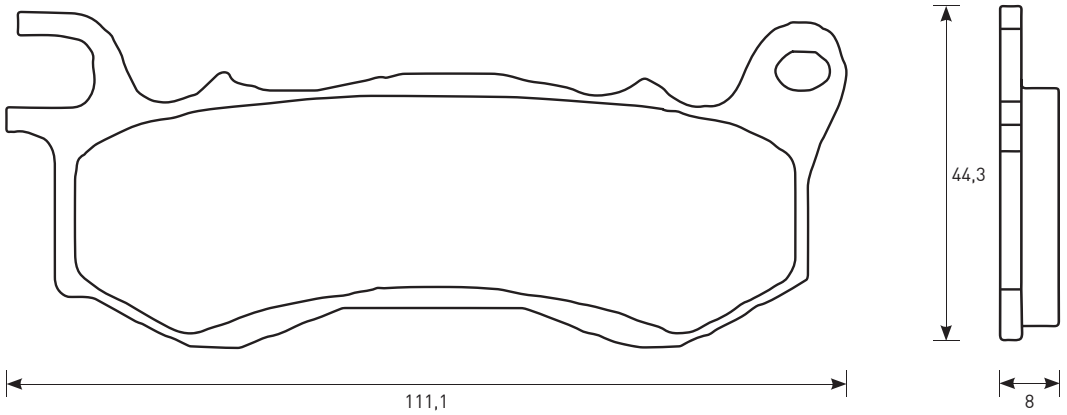

CROSS REFERENCE	
EBC	**FA603**
OGNIBENE	**179**
NEWFREN	**.FD.0467**
FERODO	**FDB2256**
SBS	**205**

EQUIVALENT OE #	
OEM Honda	**06455-GFM-D31**
OEM Honda	**06455-KWN-641**
OEM Honda	**06455-KZL-861**
OEM Honda	**06455-KWN-931**

AGPA171						
MARCA Brand	**MODELLO** Model	**CC**	**DA** From	**A** To	**ANT.** Front	**POST.** Rear
HONDA	**NSC 50 VISION**	**50**	**2010**		**X**	
HONDA	**NSC 110 VISION**	**110**	**2010**	**2012**	**X**	
HONDA	**SCV 110 LEAD**	**110**	**2010**	**2011**	**X**	
HONDA	**PCX 125**	**125**	**2009**		**X**	
HONDA	**PCX 150**	**150**	**2012**		**X**	

ACCOSSATO

PASTIGLIE BRAKE PADS

APPLICAZIONI PER CODICE PASTIGLIA / applications for pads code

MESCOLA ORGANICA organic compound
OR

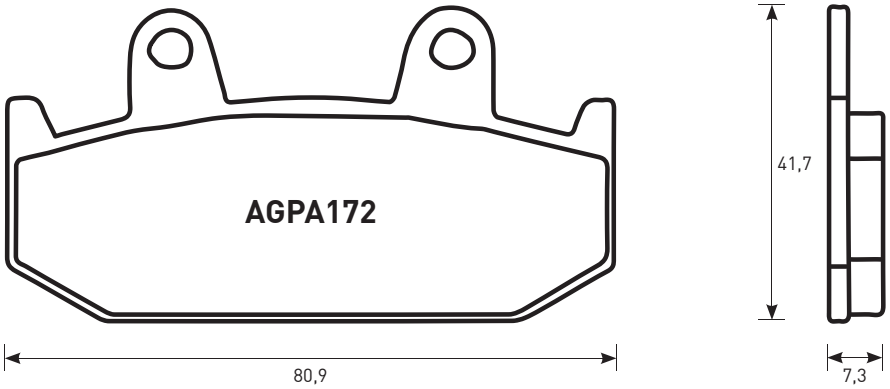

CROSS REFERENCE	
EBC	FA092
OGNIBENE	223
NEWFREN	.FD.0067
BREMBO	07HO15SD
FERODO	FDB382
CL	2451/3019
SBS	558

EQUIVALENT OE #	
OEM Honda	45105 KA3 731

AGPA172						
MARCA Brand	MODELLO Model	CC	DA From	A To	ANT. Front	POST. Rear
HONDA	MBX 80	80	1986		X	
HONDA	MTX R 80	80	1987		X	
HONDA	CR RE / RF 125	125	1984	1985	X	
HONDA	CR RG 125	125	1986		X	
HONDA	MTX R 125	125	1984	1995	X	
HONDA	NSR F 125	125	1988	1989	X	
HONDA	XL R 125	125	1986		X	
HONDA	MTX R 200	200	1985		X	
HONDA	ATC 250 R	250	1985	1986	X	X
HONDA	ATC 250 X	250	1985		X	
HONDA	CB 250 RS	250	1985		X	
HONDA	CH 250 SPACY	250	1985	1986	X	

AGPA172						
MARCA Brand	MODELLO Model	CC	DA From	A To	ANT. Front	POST. Rear
HONDA	CN 250 SPAZIO	250	1988	1989	X	
HONDA	CR 250 RE, RF	250	1984	1985	X	
HONDA	CR 250 RG	250	1986		X	
HONDA	FTR 250	250	1986		X	X
HONDA	TRX 250 R	250	1986	1989		X
HONDA	TRX 250 X FOURTRAX	250	1987			X
HONDA	XL 250 R	250	1984	1987	X	
HONDA	XLR 250 R	250	1988		X	
HONDA	XR 250 R	250	1984	1987	X	
HONDA	ATC 350 X	350	1985		X	
HONDA	XL 350 R	350	1984		X	
HONDA	XR 350 R	350	1984	1985	X	
HONDA	CR 500 RE, RF	500	1984	1985	X	
HONDA	CR 500 RG	500	1986		X	
HONDA	XL 500 R	500	1983		X	
HONDA	XR 500 R	500	1986		X	
HONDA	XR 500 R, PRO LINK	500	1983	1984	X	
HONDA	XL 600 R	600	1983	1987	X	
HONDA	XLM 600 LM	600	1987		X	
HONDA	XR 600 R	600	1983	1987	X	

PASTIGLIE BRAKE PADS

APPLICAZIONI PER CODICE PASTIGLIA / applications for pads code

MESCOLA ORGANICA organic compound
OR

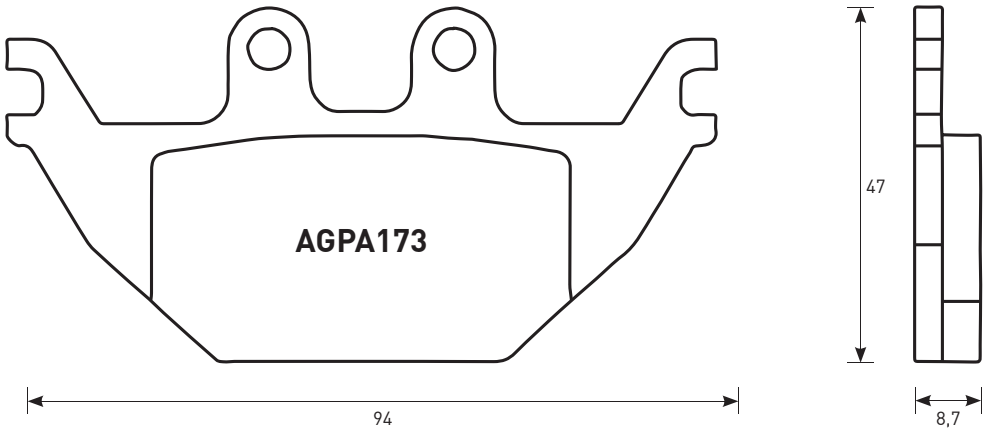

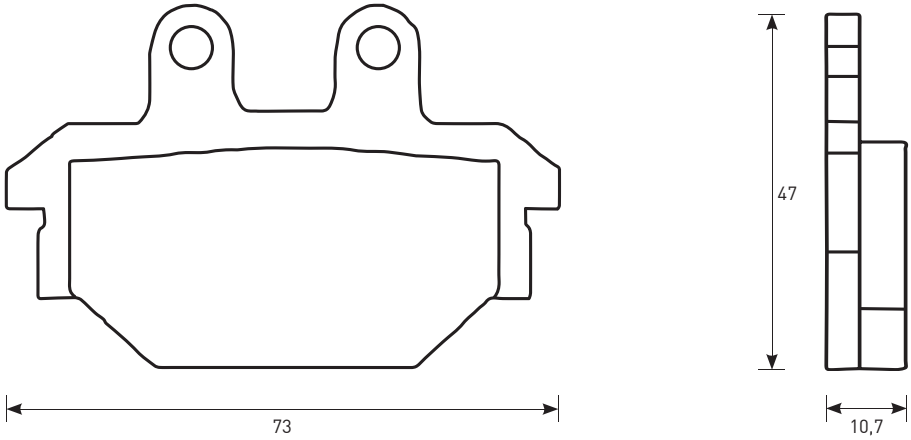

CROSS REFERENCE	
EBC	**FA377**
BRAKING	**923**
NEWFREN	**.FD.0383**
BREMBO	**07GR5209**
FERODO	**FDB2184**
CL	**1147**
SBS	**810**

EQUIVALENT OE #	
OEM Yamaha	**5D7 F582W 00**

AGPA173						
MARCA Brand	**MODELLO** Model	**CC**	**DA** From	**A** To	**ANT.** Front	**POST.** Rear
ADLY	**CROSS X OVER 300**	**300**	**2007**		**X**	
ADLY	**CROSS X ROAD 300**	**300**	**2007**		**X**	
ADLY	**ATV SPORT 300**	**300**	**2007**		**X**	
ADLY	**S 320**	**320**	**2007**		**X**	
ADLY	**U 320**	**320**	**2007**		**X**	
ARCTIC CAT	**250 DVX**	**250**	**2006**	**2009**	**X**	
ARCTIC CAT	**300 DVX**	**300**	**2009**		**X**	
CAN-AM	**DS 250**	**250**	**2008**		**X**	
CECTEK	**500 EFI GLADIATOR**	**500**	**2009**		**X**	
CPI	**250 XS ATV**	**250**	**2007**		**X**	
HERCULES	**280 ATV**	**280**	**2007**		**X**	
HERCULES	**300 ATV SPORT**	**300**	**2007**		**X**	
KAWASAKI	**KVF 300 BRUTE FORCE**	**300**	**2013**			**X**
KYMCO	**250 MXU**	**250**	**2006**		**X**	
KYMCO	**250 URBAN QUAD**	**250**	**2006**		**X**	
KYMCO	**KXR 250**	**250**	**2004**		**X**	
KYMCO	**300 MAXXER**	**300**	**2006**	**2010**	**X**	

AGPA173						
MARCA Brand	**MODELLO** Model	**CC**	**DA** From	**A** To	**ANT.** Front	**POST.** Rear
KYMCO	**300 MAXXER SUPERMOTO**	**300**	**2015**		**X**	
KYMCO	**300 MXU**	**300**	**2006**		**X**	**X**
KYMCO	**450 I MXU**	**450**	**2013**		**X**	**X**
KYMCO	**500 MXU**	**500**	**2006**		**X**	**X**
KYMCO	**500 UXV 4X4**	**500**	**2008**		**X**	**X**
PGO	**500 BUG**	**500**	**2008**			**X**
PGO	**BR 500 I RACER**	**500**	**2007**			**X**
SYM	**SB 125 WOLF NI**	**125**	**2011**			**X**
SYM	**200 TRACKRUNNER**	**200**	**2006**		**X**	**X**
SYM	**250 QUADLANDER**	**250**	**2006**		**X**	
SYM	**SN 250 NI WOLF**	**250**	**2014**			**X**
SYM	**300 CITY MAX**	**300**	**2006**		**X**	
SYM	**300 QUADLANDER**	**300**	**2006**		**X**	**X**
SYM	**300 WOLF CAFE RACER**	**300**	**2015**			**X**
SYM	**300 WOLF CLASSIC 15- HF**	**300**	**2015**			**X**
SYM	**600 QUAD RAIDER**	**600**	**2008**		**X**	**X**
TGB	**400 Avenger 4x2 / LE**	**400**	**2007**	**2009**	**X**	**X**
TGB	**425 Blade 4x4**	**425**	**2007**	**2009**	**X**	**X**
TGB	**425 Blade 4x4 SE**	**425**	**2009**		**X**	**X**
TGB	**500 Avenger 4x2 R**	**500**	**2007**	**2009**	**X**	**X**
TGB	**525 Blade 4x4 SE**	**425**	**2009**		**X**	**X**
TGB	**525 Blade 4x4 SL**	**425**	**2009**		**X**	
TGB	**525 SE 4x4**	**525**	**2009**		**X**	
TGB	**550 Blade 4x4 SE / SL**	**550**	**2009**		**X**	
YAMAHA	**MT 125**	**125**	**2014**			**X**
YAMAHA	**YZF 125 R**	**125**	**2008**	**2014**		**X**

ACCOSSATO

PASTIGLIE BRAKE PADS

APPLICAZIONI PER CODICE PASTIGLIA / applications for pads code

MESCOLA ORGANICA organic compound
OR

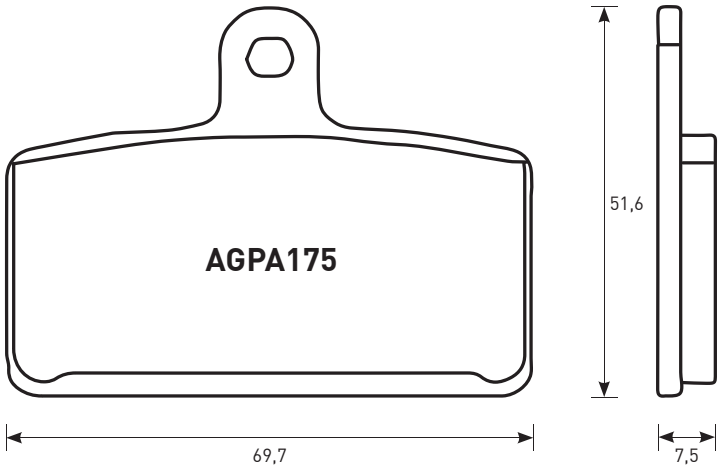

CROSS REFERENCE	
EBC	FA399
BRAKING	964
NEWFREN	.FD.0380
BREMBO	07GR72
FERODO	FDB2201
SBS	821/189

EQUIVALENT OE #	
00H01201221	8044220
810K5804	864580
866687	

AGPA175						
MARCA Brand	MODELLO Model	CC	DA From	A To	ANT. Front	POST. Rear
APRILIA	RS-4 50	50	2012		X	
APRILIA	RS-4 125	125	2011	2012	X	
BLATA	125 ENDURO	125	2007		X	
BLATA	125 MOTARD	125	2007		X	
DERBI	50 DRD PRO CORSE	50	2006		X	
DERBI	GPX1 50	50	2006		X	

AGPA175						
MARCA Brand	MODELLO Model	CC	DA From	A To	ANT. Front	POST. Rear
DERBI	GPR 80 CUP	80	2004		X	
DERBI	GPR 125	125	2005		X	
DERBI	GPR 125 NUDE	125	2005		X	
DERBI	GPR 125 RACING	125	2009		X	
GILERA	SC 125	125	2006		X	
MALAGUTI	NKD 50 DRAGON	50	2006		X	
MOTORHISPANIA	RX 50 R	50	2008		X	
MOTORHISPANIA	MH7 125 NAKED	125	2008		X	
MOTORHISPANIA	RX 125 R	125	2008		X	
PEUGEOT	XR 7 50	50	2008		X	
RIEJU	RS3 50 PRO	50	2012		X	
RIEJU	125 TANGO	125	2006		X	
RIEJU	RS3 125	125	2010		X	
TOMOS	SM 125 F (RAD.CAL)	125	2006		X	

MESCOLA ORGANICA organic compound
OR

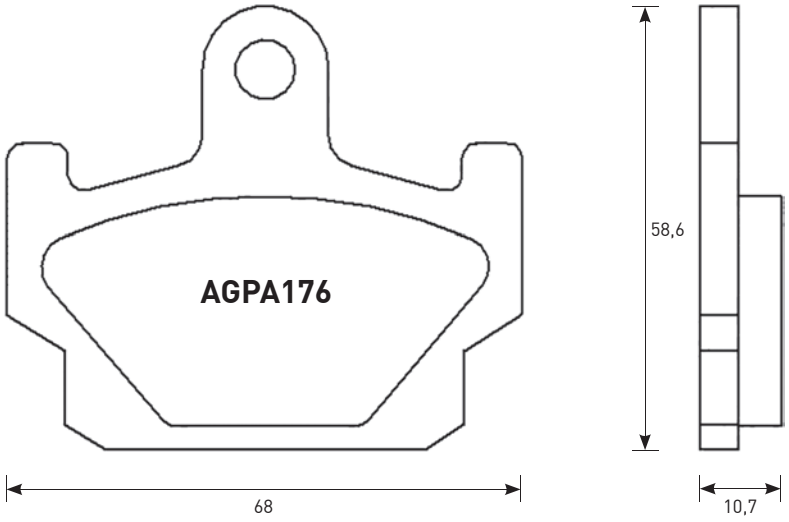

CROSS REFERENCE	
EBC	FA081
OGNIBENE	230
BRAKING	658
NEWFREN	.FD.0062
BREMBO	07YA1011
FERODO	FDB311
CL	2802
SBS	550

EQUIVALENT OE #	
OEM Yamaha	2UJ W0045 01
OEM Yamaha	29LW004510

AGPA176						
MARCA Brand	MODELLO Model	CC	DA From	A To	ANT. Front	POST. Rear
YAMAHA	DT 80 LC	80	1981	1984	X	
YAMAHA	RD 80 LC	80	1981		X	
YAMAHA	RX 100	100	1984		X	
YAMAHA	RX 115 S	115	1982		X	
YAMAHA	RD 125 LC	125	1982	1984	X	
YAMAHA	SR 125	125	1992	1996	X	
YAMAHA	XV 240 VIRAGO	240	1992		X	

PASTIGLIE BRAKE PADS

APPLICAZIONI PER CODICE PASTIGLIA / applications for pads code

AGPA176						
MARCA Brand	**MODELLO** Model	**CC**	**DA** From	**A** To	**ANT.** Front	**POST.** Rear
YAMAHA	RD 250 LC	250	1983		X	
YAMAHA	XV 250 ROUTE 66	250	1988	1990	X	
YAMAHA	XV 250 VIRAGO	250	1988		X	
YAMAHA	RD 350 LC YPVS	350	1983	1984	X	
YAMAHA	RZ 350 L, N, NC	350	1984	1985	X	
YAMAHA	XJ 400	400	1982		X	X
YAMAHA	XS 400	400	1985		X	
YAMAHA	XS 400 DOHC	400	1982		X	
YAMAHA	XS 400 RJ, RK, J, K	400	1982	1983	X	
YAMAHA	XS 500 DOHC	500	1982		X	
YAMAHA	XT 500 (AUSTRIA)	500	1983		X	

AGPA176						
MARCA Brand	**MODELLO** Model	**CC**	**DA** From	**A** To	**ANT.** Front	**POST.** Rear
YAMAHA	XV 500 K, VIRAGO	500	1983		X	
YAMAHA	XV 500 SE	500	1983		X	
YAMAHA	XZ 550	550	1983	1984	X	
YAMAHA	XZ 550 RJ, RK	550	1982	1983	X	
YAMAHA	XZ 550 S	550	1983	1984	X	
YAMAHA	XT 600	600	1983	1986	X	
YAMAHA	XT 600 TENERE	600	1983	1984	X	
YAMAHA	XJ 650 83 H	650	1983		X	
YAMAHA	XJ 650 TURBO	650	1981	1982	X	
YAMAHA	XJ 750 MAXIM	750	1982		X	
YAMAHA	XV 920 K, MK, VIRAGO	920	1983			X

MESCOLA SINTERIZZATA sintered compound
ST

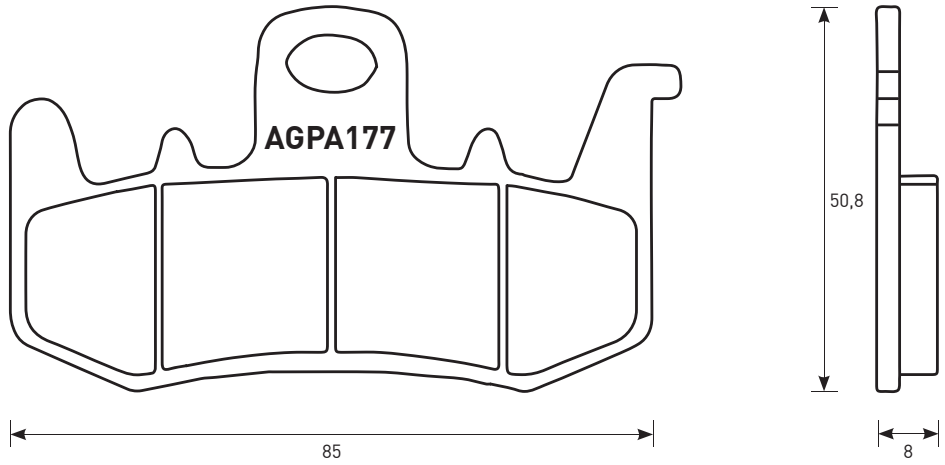

CROSS REFERENCE	
EBC	**FA630**
BRAKING	**960**
BREMBO	**07BB38**
FERODO	**FDB2265**
SBS	**900**

EQUIVALENT OE #	
219800237	**2B000214**
34118540956	**B044601**
61340121A	**34118548028**
61341021A	**8000B9025**

AGPA177						
MARCA Brand	**MODELLO** Model	**CC**	**DA** From	**A** To	**ANT.** Front	**POST.** Rear
APRILIA	RSV 1000 TUONO V4 R	1000	2014		X	
APRILIA	RSV 1100 TUONO V4	1100	2015		X	
APRILIA	1200 CAPONORD	1200	2013		X	
APRILIA	1200 CAPONORD RALLY	1200	2015		X	
BMW	F 800 R	800	2015		X	
BMW	S 1000 XR	1000	2015		X	
BMW	R 1200 GS	1200	2013	2014	X	
BMW	R 1200 GS ADVENTURE	1200	2014		X	
BMW	R 1200 NINE-T	1200	2014		X	
BMW	R 1200 R	1200	2015		X	
BMW	R 1200 RS	1200	2015		X	
BMW	R 1200 RT	1200	2014		X	

AGPA177						
MARCA Brand	**MODELLO** Model	**CC**	**DA** From	**A** To	**ANT.** Front	**POST.** Rear
DUCATI	800 HYPERMOTARD	800	2013		X	
DUCATI	800 HYPERMOTARD SP	800	2013		X	
DUCATI	800 HYPERSTRADA	800	2013		X	
DUCATI	800 SCRAMBLER CLASSIC	800	2015		X	
DUCATI	800 SCRAMBLER ENDURO	800	2015		X	
DUCATI	800 SCRAMBLER FULL THROTTLE	800	2015		X	
DUCATI	800 SCRAMBLER ICON	800	2015		X	
DUCATI	821 MONSTER	821	2015		X	
DUCATI	821 MONSTER DARK	821	2015		X	
DUCATI	899 PANIGALE	899	2014		X	
DUCATI	1200 MONSTER	1200	2014		X	
DUCATI	1200 MULTISTRADA	1200	2015		X	
MV AGUSTA	800 RIVALE	800	2013		X	
MV AGUSTA	800 STRADALE	800	2015		X	
MV AGUSTA	800 TURISMO VELOCE	800	2014		X	
MV AGUSTA	800 TURISMO VELOCE LUSSO	800	2014		X	

PASTIGLIE BRAKE PADS

APPLICAZIONI PER CODICE PASTIGLIA / applications for pads code

MESCOLA ORGANICA E EV1 organic and ev1 compounds
OR / EV1

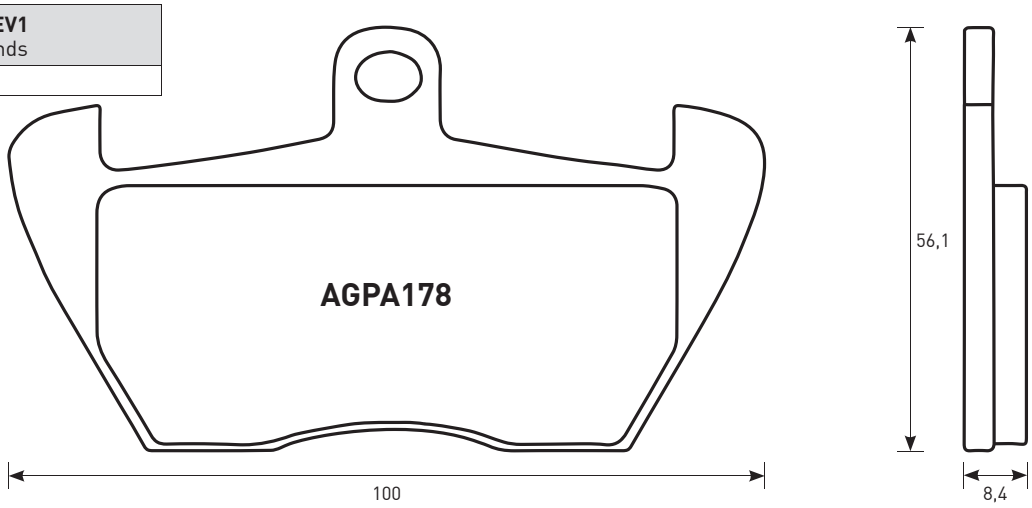

CROSS REFERENCE	
EBC	FA407
NEWFREN	.FD.0237
FERODO	FDB2050
CL	2430
SBS	703

EQUIVALENT OE #	
OEM BMW	34 11 231 4996
OEM BMW	34 11 7 655 687
OEM BMW	34 11 2 331 173
OEM BMW	34 11 2 333 045
OEM BMW	34 11 2 314 512

AGPA178

MARCA Brand	MODELLO Model	CC	DA From	A To	ANT. Front	POST. Rear
BMW	R 850 C	850	1999		X	
BMW	R 850 GS	850	1999		X	
BMW	R 850 R	850	1996		X	
BMW	R 850 RT	850	1996	2001	X	

AGPA178

MARCA Brand	MODELLO Model	CC	DA From	A To	ANT. Front	POST. Rear
BMW	R 1100 GS	1100	1999		X	
BMW	R 1100 R	1100	1999		X	
BMW	R 1100 RT	1100	1995		X	
BMW	R 1100 S	1100	1999	2000	X	
BMW	R1100 GS	1100	1994		X	
BMW	R1100 RS	1100	1994		X	
BMW	R 1150 GS	1150	2000	2001	X	
BMW	K 1200 LT	1200	1999	2000	X	
BMW	K 1200 RS	1200	1997	2000	X	
BMW	R 1200 C	1200	1998	2002	X	

MESCOLA ORGANICA E SINTERIZZATA organic and sintered compounds
OR / ST

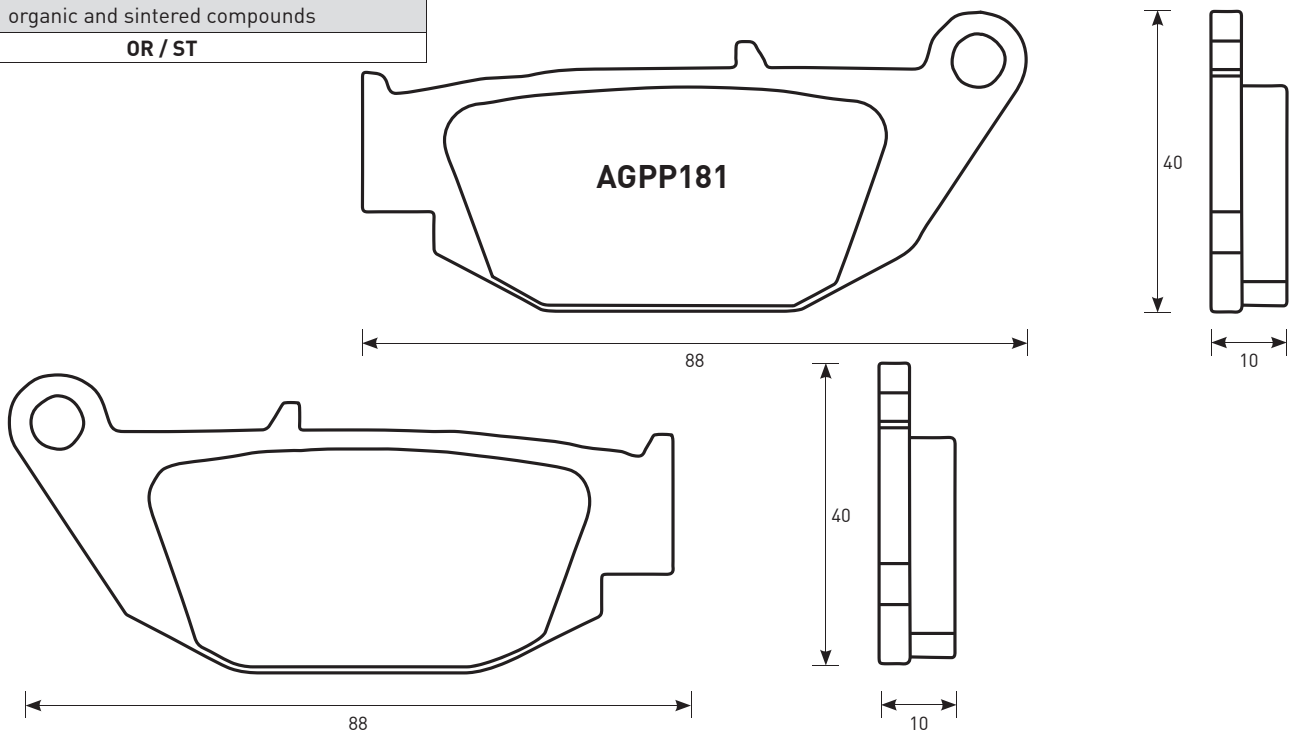

CROSS REFERENCE	
EBC	FA629
BRAKING	965
FERODO	FDB2275
SBS	915

EQUIVALENT OE #	
OEM Honda	06435-KZZ-901

AGPP181

MARCA Brand	MODELLO Model	CC	DA From	A To	ANT. Front	POST. Rear
HONDA	CBR 125 R	125	2011			X
HONDA	MSX 125	125	2014			X
HONDA	CRF 250 L	250	2013			X
HONDA	CRF 250 M	250	2014			X

PASTIGLIE BRAKE PADS

APPLICAZIONI PER CODICE PASTIGLIA / applications for pads code

MESCOLA ORGANICA organic compound
OR

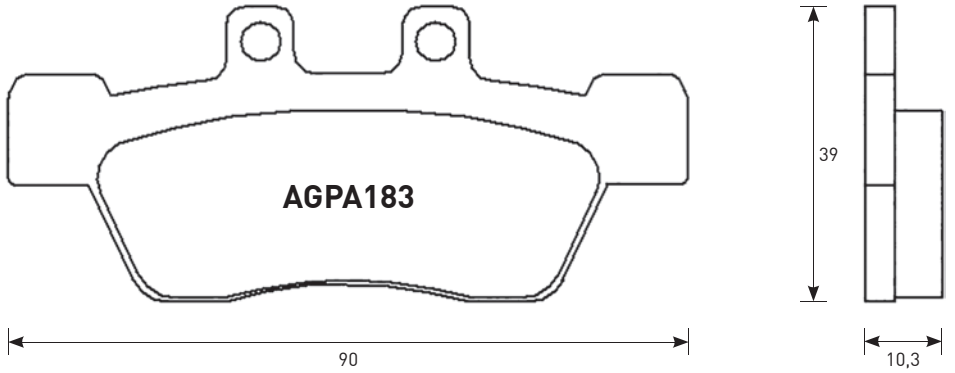

CROSS REFERENCE	
EBC	**FA632**
SBS	**207**

EQUIVALENT OE #	
17CW004500	**4C6W004500**

AGPA183						
MARCA Brand	**MODELLO** Model	**CC**	**DA** From	**A** To	**ANT.** Front	**POST.** Rear
YAMAHA	**NXC CYGNUS 125**	**125**	**2010**		**X**	

MESCOLA ORGANICA E SINTERIZZATA organic and sintered compounds
OR / ST

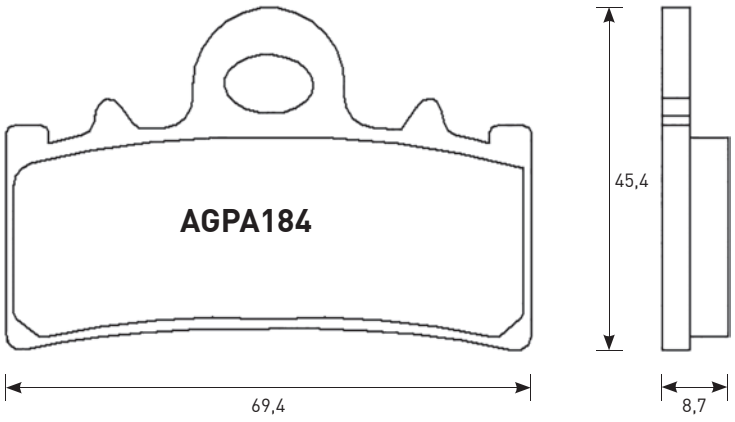

CROSS REFERENCE	
EBC	**FA606**
BRAKING	**952**
BREMBO	**07GR18**
FERODO	**FDB2266**
SBS	**877**

EQUIVALENT OE #	
OEM KTM	**90113030000**

AGPA184						
MARCA Brand	**MODELLO** Model	**CC**	**DA** From	**A** To	**ANT.** Front	**POST.** Rear
KTM	**DUKE 125**	**125**	**2011**		**X**	
KTM	**RC 125**	**125**	**2014**		**X**	
KTM	**200 DUKE**	**200**	**2012**		**X**	
KTM	**RC 200**	**200**	**2014**		**X**	
KTM	**390 DUKE**	**390**	**2013**		**X**	
KTM	**RC 390**	**390**	**2014**		**X**	

ACCOSSATO

PASTIGLIE BRAKE PADS

APPLICAZIONI PER CODICE PASTIGLIA / applications for pads code

MESCOLA SINTERIZZATA sintered compound
ST

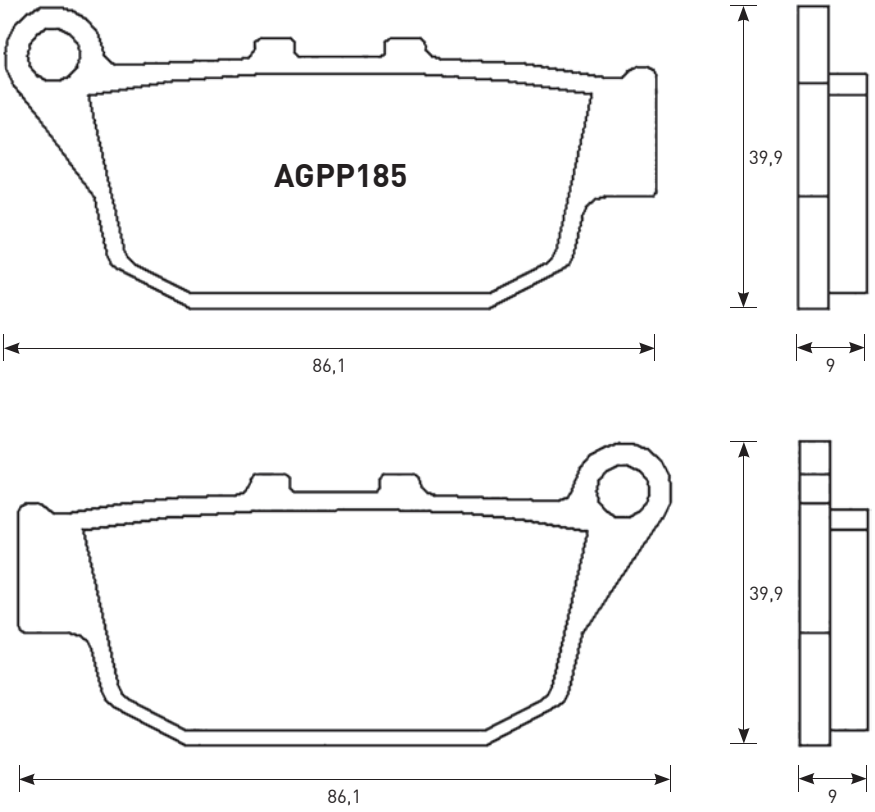

CROSS REFERENCE	
EBC	FA496
BRAKING	956
FERODO	FDB2258
SBS	881

EQUIVALENT OE #	
OEM Honda	06435 KYJ 901
OEM Suzuki	69101-44850

AGPP185						
MARCA Brand	MODELLO Model	CC	DA From	A To	ANT. Front	POST. Rear
HONDA	CBR 250 R (NISSIN CAL)	250	2011	2013		X
HONDA	CBR 250 R ABS (NISSIN CAL)	250	2011	2013		X
HONDA	CBR 300 F	300	2014			X
HONDA	CB 500 F	500	2013			X
HONDA	CB 500 X	500	2013			X
HONDA	CBR 500 R	500	2013			X

AGPP185						
MARCA Brand	MODELLO Model	CC	DA From	A To	ANT. Front	POST. Rear
HONDA	CB 650 F	650	2014			X
HONDA	CBR 650 F	650	2014			X
HONDA	CTX 700	700	2014			X
HONDA	CTX 700 D ABS w/DCT	700	2014			X
HONDA	CTX 700 N	700	2014			X
HONDA	CTX 700 ND ABS w/DCT	700	2014			X
HONDA	NM4 700 VULTUS ABS w/DCT	700	2015			X
HONDA	NC 750 D INTEGRA	750	2014			X
HONDA	NC 750 S w/DCT	750	2014			X
HONDA	NC 750 X w/DCT	750	2014			X
KAWASAKI	Z 750 R	750	2011			X
KAWASAKI	Z 800	800	2013			X
KAWASAKI	Z 800 e	800	2013			X
SUZUKI	SFV 650 GLADIUS LEFT/REAR	650	2009			X

PASTIGLIE BRAKE PADS

APPLICAZIONI PER CODICE PASTIGLIA / applications for pads code

MESCOLA SINTERIZZATA E ZXC sintered and zxc compounds
ST / ZXC

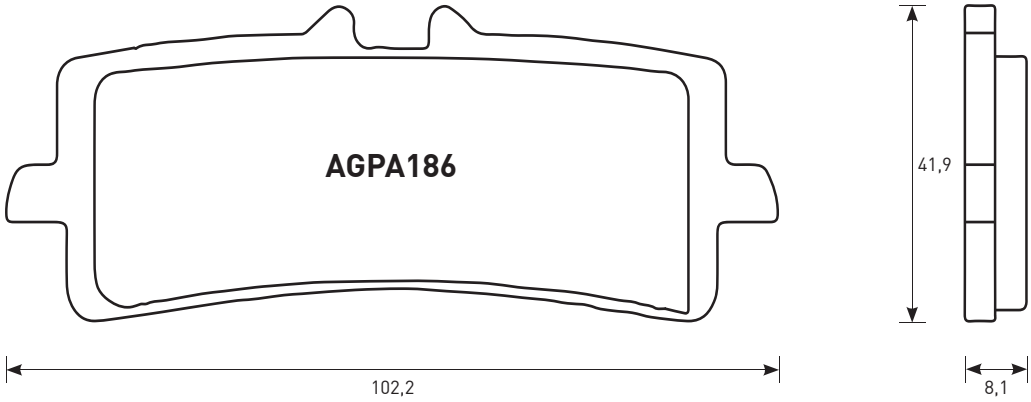

CROSS REFERENCE	
SBS	**901**

EQUIVALENT OE #	
/	**/**

AGPA186						
MARCA Brand	**MODELLO** Model	**CC**	**DA** From	**A** To	**ANT.** Front	**POST.** Rear
APRILIA	**RSV-4RR 1000**	**1000**	**2015**		**X**	
BIMOTA	**BB3 1000**	**1000**	**2014**		**X**	
BIMOTA	**DB7 1099 (RAD.CAL)**	**1099**	**2009**		**X**	
BIMOTA	**DB8 1198 (RAD.CAL)**	**1198**	**2010**		**X**	
BIMOTA	**DB11 1200 VLX (RAD.CAL)**	**1200**	**2013**		**X**	
BMW	**S 1000 RR HP4**	**1000**	**2013**	**2014**	**X**	
BMW	**1200 HP2 SPORT**	**1200**	**2008**	**2010**	**X**	
HONDA	**CBR 1000 RR SP**	**1000**	**2014**		**X**	
TRIUMPH	**675 DAYTONA R TRIPLE (RAD.CAL)**	**675**	**2011**	**2013**	**X**	

MESCOLA ORGANICA E SINTERIZZATA organic and sintered compound
OR / ST

CROSS REFERENCE	
/	**/**

EQUIVALENT OE #	
/	**/**

AGPP188						
MARCA Brand	**MODELLO** Model	**CC**	**DA** From	**A** To	**ANT.** Front	**POST.** Rear
YAMAHA	**YP R 250 X-MAX**	**250**	**2014**			**X**

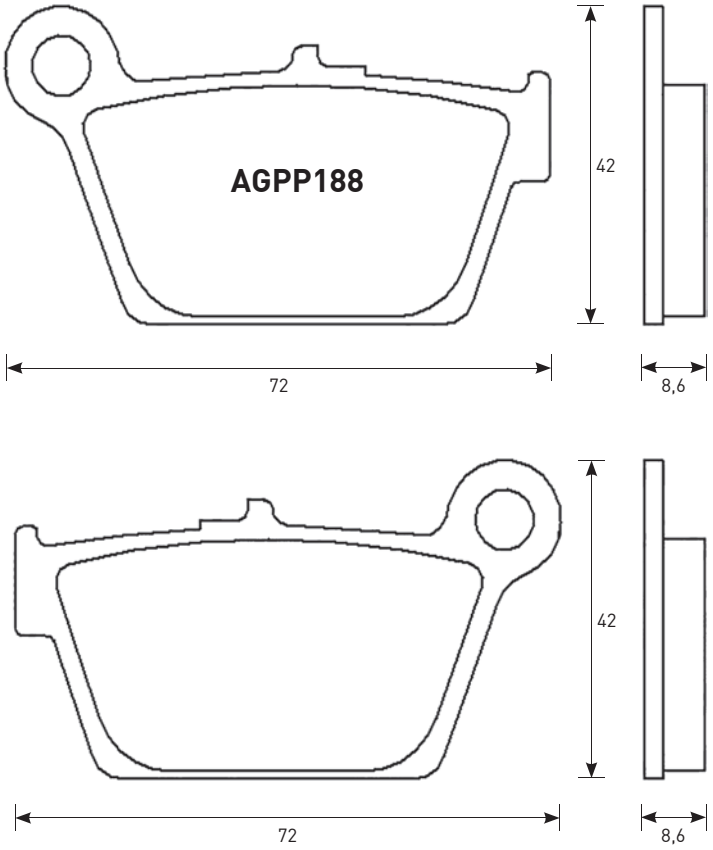

ACCOSSATO

PASTIGLIE BRAKE PADS

APPLICAZIONI PER CODICE PASTIGLIA / applications for pads code

MESCOLA SINTERIZZATA sintered compound
ST

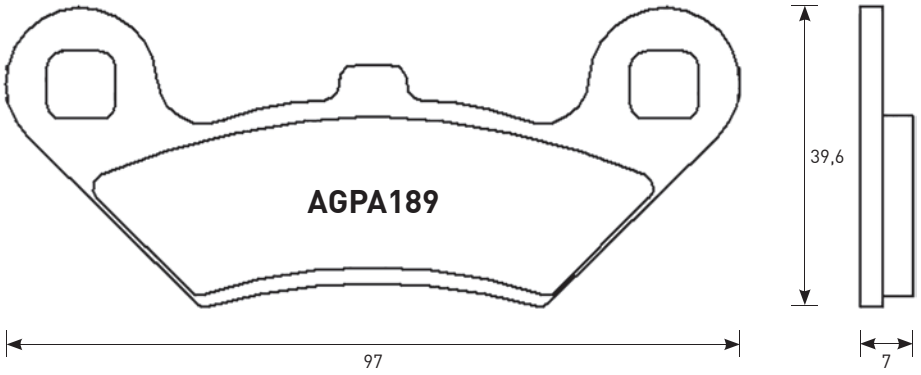

CROSS REFERENCE	
EBC	FA159
NEWFREN	.FD.0280
BREMBO	07P002SD
FERODO	FDB2055
CL	2927
SBS	716

EQUIVALENT OE #	
OEM Polaris	2202412

AGPA189						
MARCA Brand	MODELLO Model	CC	DA From	A To	ANT. Front	POST. Rear
POLARIS	TRAIL BLAZER		1990	1993	X	
POLARIS	TRAIL BOSS 2X4, 4X4		1988	1989	X	
POLARIS	250 2X4, 4X4	250	1990		X	
POLARIS	250 2X4, 4X4	250	1993		X	
POLARIS	250 BIG BOSS 4X6, 6X6	250	1989	1993	X	
POLARIS	250 TRAIL BLAZER	250	1994	1999	X	
POLARIS	250 TRAIL BOSS	250	1991	1999	X	
POLARIS	250 TRAIL BOSS 2X4, 4X4	250	1991	1992	X	
POLARIS	250 XPLORER 4X4	250	2000		X	
POLARIS	300 2X4, 4X4	300	1994	1995	X	
POLARIS	300 BIG BOSS 6X6	300	1994		X	
POLARIS	300 HAWKEYE 2X4, 4X4	300	2007		X	X
POLARIS	300 XPLORER 4X4	300	1996		X	
POLARIS	300 XPRESS 2X4	300	1998		X	
POLARIS	300 XPRESS L	300	1996	1997	X	
POLARIS	325 MAGNUM 2X4, 4X4	325	2000	2002	X	
POLARIS	325 TRAIL BOSS	325	2000	2002	X	
POLARIS	330 ATP	330	2004	2005	X	X
POLARIS	330 ATP	330	2006		X	
POLARIS	330 MAGNUM 2X4, 4X4	330	2003		X	
POLARIS	330 TRAIL BOSS	330	2003		X	
POLARIS	335 SPORTSMAN 4X4 -	335	1999		X	
POLARIS	350 BIG BOSS	350	1993		X	
POLARIS	350 L 2X4, 4X4	350	1990		X	
POLARIS	350 L 4X4	350	1993		X	

AGPA189						
MARCA Brand	MODELLO Model	CC	DA From	A To	ANT. Front	POST. Rear
POLARIS	350 SPORTSMAN 4X4	350	1993		X	
POLARIS	350 TRAIL BOSS L 2X4	350	1991	1993	X	
POLARIS	400 BIG BOSS L 6X6	400	1996		X	
POLARIS	400 L 2X4	400	1994	1995	X	
POLARIS	400 SCRAMBLER 2X4, 4X4	400	2000		X	
POLARIS	400 SCRAMBLER 4X4	400	1998	1999	X	
POLARIS	400 SCRAMBLER L 4X4	400	1995	1997	X	
POLARIS	400 SPORT	400	1999	2000	X	
POLARIS	400 SPORT L -	400	1994	1998	X	
POLARIS	400 SPORTSMAN	400	2001		X	
POLARIS	400 SPORTSMAN L 4X4 -	400	1994	1997	X	
POLARIS	400 TRAIL BLAZER	400	2003		X	
POLARIS	400 XPLORER L 4X4	400	1995	2000	X	
POLARIS	400 XPRESS L	400	1996	1997	X	
POLARIS	425 2X4, 4X4 MAGNUM	425	1995	1998	X	X
POLARIS	425 MAGNUM 6X6	425	1996		X	
POLARIS	425 XPEDITION 4X4	425	2000		X	
POLARIS	450 SPORTSMAN	450	2006		X	
POLARIS	455 DIESEL EBS 4X4	455	1999		X	
POLARIS	500 ATP HO	500	2004		X	X
POLARIS	500 BIG BOSS 6X6	500	1998	1999	X	
POLARIS	500 MAGNUM 2X4, 4X4	500	2002		X	
POLARIS	500 MAGNUM 4X4	500	2000	2001	X	
POLARIS	500 OUTLAW	500	2006		X	
POLARIS	500 PREDATOR	500	2003		X	X
POLARIS	500 PREDATOR E	500	2006		X	X
POLARIS	500 RANGER 6X6	500	2000	2002	X	
POLARIS	500 SCRAMBLER 2X4	500	2001		X	
POLARIS	500 SCRAMBLER 4X4	500	1997	1998	X	
POLARIS	500 SPORTSMAN 4X4	500	1996		X	
POLARIS	500 SPORTSMAN 6X6	500	2000		X	
POLARIS	500 SPORTSMAN EBS 4X4	500	1998		X	
POLARIS	500 XPLORER 4X4	500	1997		X	

PASTIGLIE BRAKE PADS

APPLICAZIONI PER CODICE PASTIGLIA / applications for pads code

MESCOLA SINTERIZZATA sintered compound
ST

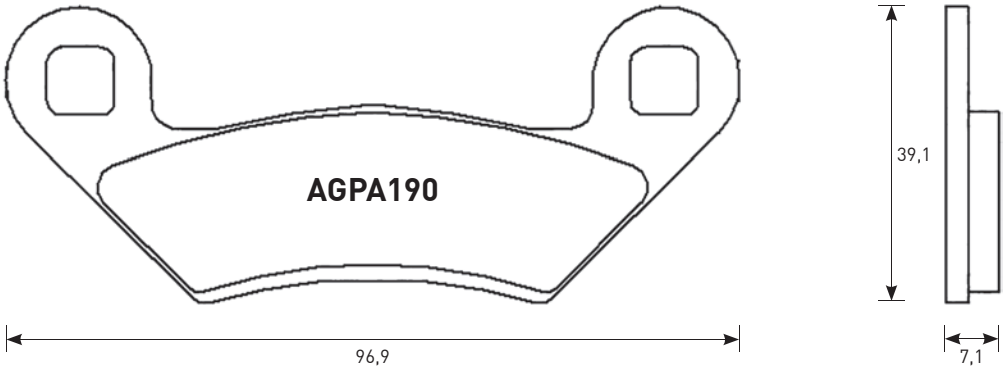

CROSS REFERENCE	
EBC	**FA159**
NEWFREN	**.FD.0280**
BREMBO	**07P002SD**
FERODO	**FDB2055**
CL	**2927**
SBS	**642**

EQUIVALENT OE #	
OEM Polaris	**2202412**

AGPA190						
MARCA Brand	**MODELLO** Model	**CC**	**DA** From	**A** To	**ANT.** Front	**POST.** Rear
POLARIS	**250 TRAIL BOSS**	**250**	**1988**	**1990**	**X**	
POLARIS	**300 SPORTSMAN 4X4**	**300**	**2008**		**X**	**X**
POLARIS	**325 XPEDITION**	**325**	**2000**	**2002**	**X**	
POLARIS	**330 E TRAIL BLAZER**	**330**	**2008**		**X**	
POLARIS	**450 OUTLAW MXR**	**450**	**2009**			**X**
POLARIS	**450 OUTLAW S**	**450**	**2008**			**X**
POLARIS	**500 E SCRAMBLER 2X4, 4X4**	**500**	**2008**		**X**	
POLARIS	**500 REVOLVER**	**500**	**2006**		**X**	**X**
POLARIS	**500 SPORTSMAN HO (FROM 16.12.2008)**	**500**	**2009**		**X**	

AGPA190						
MARCA Brand	**MODELLO** Model	**CC**	**DA** From	**A** To	**ANT.** Front	**POST.** Rear
POLARIS	**500 SPORTSMAN HO (TO 15.12.2008)**	**500**	**2003**	**2008**	**X**	
POLARIS	**525 OUTLAW**	**525**	**2007**			**X**
POLARIS	**525 OUTLAW IRS**	**525**	**2008**			**X**
POLARIS	**525 OUTLAW S**	**525**	**2008**			**X**
POLARIS	**570 RANGER RZR EFI**	**570**	**2012**			**X**
POLARIS	**600 SPORTSMAN**	**600**	**2003**		**X**	
POLARIS	**700 SPORTSMAN**	**700**	**2002**		**X**	
POLARIS	**SPORTSMAN MV 700**	**700**	**2005**		**X**	
POLARIS	**800 RANGER RZR EFI**	**800**	**2008**			**X**
POLARIS	**800 RANGER RZR S EFI**	**800**	**2009**			**X**
POLARIS	**800 RZR**	**800**	**2008**			**X**
POLARIS	**800 SPORTSMAN (FROM 16.12.2008)**	**800**	**2009**		**X**	
POLARIS	**800 SPORTSMAN (TO 15.12.2008)**	**800**	**2005**	**2008**	**X**	

MESCOLA EV1 / EV2 ev1 and ev2 compounds
EV1 / EV2

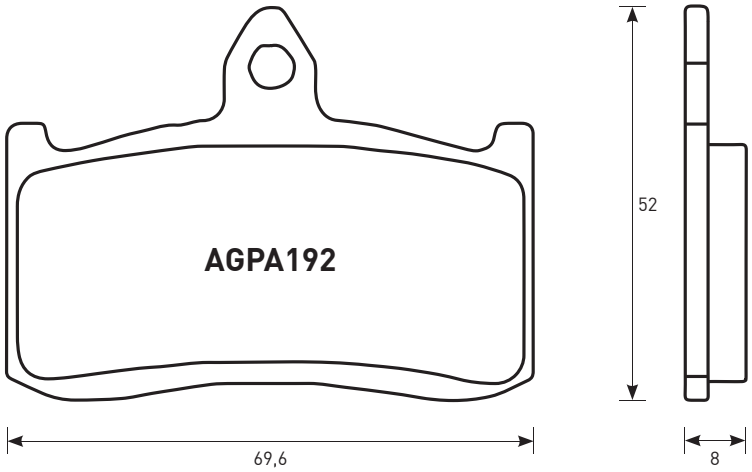

CROSS REFERENCE	
EBC	**FA239**
NEWFREN	**.FD.0198**
BREMBO	**07H02807**
FERODO	**FDB858**
CL	**1157**

EQUIVALENT OE #	
OEM Honda	**06455 MW4 405**

AGPA192						
MARCA Brand	**MODELLO** Model	**CC**	**DA** From	**A** To	**ANT.** Front	**POST.** Rear
HONDA	**RS 125 R**	**125**	**1995**		**X**	
HONDA	**RS 250 R**	**250**	**1993**		**X**	

PASTIGLIE BRAKE PADS

APPLICAZIONI PER CODICE PASTIGLIA / applications for pads code

MESCOLA EV1 ev1 compound
EV1

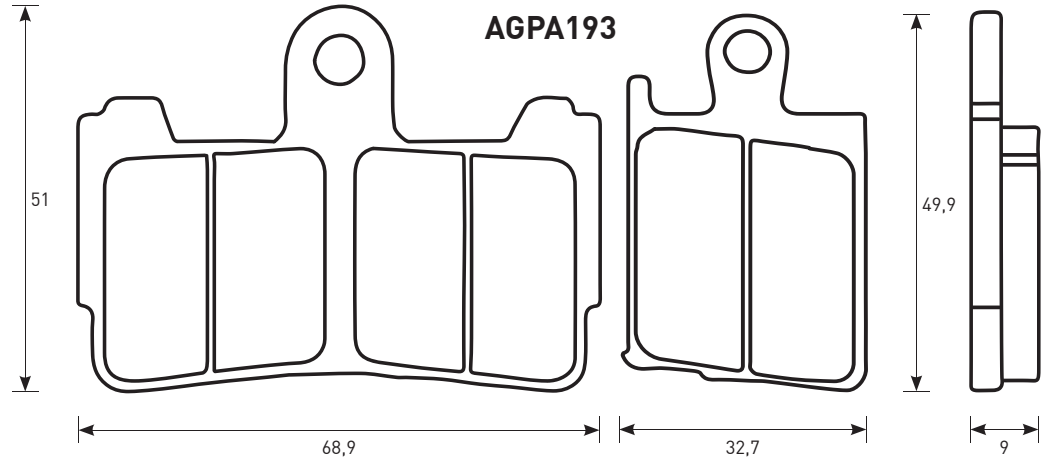

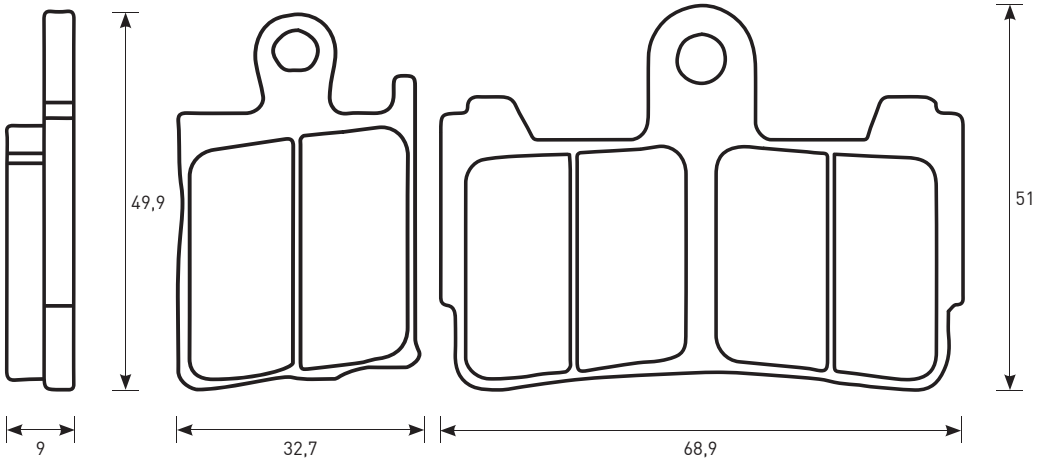

CROSS REFERENCE	
EBC	FA499/4
BRAKING	950
FERODO	FDB2259
CL	1216
SBS	869

EQUIVALENT OE #	
OEM Honda	6455-MGE-006

AGPA193						
MARCA Brand	MODELLO Model	CC	DA From	A To	ANT. Front	POST. Rear
HONDA	VFR 1200 F	1200	2010		X	

PASTIGLIE BRAKE PADS

APPLICAZIONI PER CODICE PASTIGLIA / applications for pads code

ACCOSSATO

MESCOLA EV1 / EV2 ev1 and ev2 compounds
EV1 / EV2

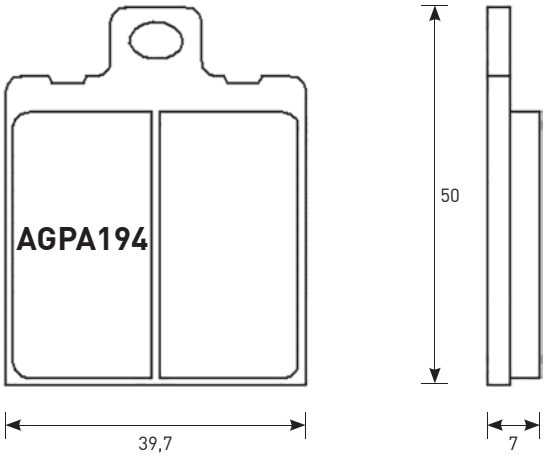

CROSS REFERENCE	
EBC	FA047
BRAKING	612
NEWFREN	FD001
BREMBO	72656
FERODO	FDB705
CL	2249
SBS	519/138/164

EQUIVALENT OE #	
OEM Aprilia	8213197
OEM Aprilia	8113651
OEM Cagiva	8000 68794
OEM Cagiva	8000 46147
OEM Ducati	61340281A
OEM Ducati	61340541A
OEM Ducati	61340311A
OEM Ducati	61340071A
OEM Ducati	61340081A
OEM Moto Guzzi	276546100
OEM Moto Guzzi	31654665
OEM Moto Guzzi	19654601
OEM Moto Guzzi	36139666
OEM Moto Guzzi	27654610
OEM Moto Guzzi	19654600
OEM MZ 9021	35000
OEM Yamaha	3SH F5811 20

AGPA194						
MARCA Brand	MODELLO Model	CC	DA From	A To	ANT. Front	POST. Rear
ALFER	MC 80	80	1987		X	
ALFER	MC 125	125	1987		X	
ALFER	MC 250	250	1985		X	
ALFER	MC 250	250	1987		X	X
ALFER	GR 250 ENDURO	250	1985		X	
ALFER	GR 300	300	1985		X	
ALFER	MC 125	125	1988			X
ALFER	MC 250	250	1988			X
ALFER	GR 250 ENDURO	250	1988			X
ALFER	GR 300 ENDURO	300	1988			X
APRILIA	E.T. 50	50	1985		X	X
APRILIA	200 CLIMBER	200	1993		X	X
APRILIA	MX 250 CROSS	250	1985		X	
APRILIA	RX 250	250	1986		X	
APRILIA	125 CLASSIC	125	1996-			X
APRILIA	125 RED ROSE	125	1989	1990		X
APRILIA	125 SPORT PROT.	125	1992			X
APRILIA	125 TUAREG	125	1987			X
APRILIA	125 TUAREG RALLY	125	1989	1991		X
APRILIA	125 TUONO	125	2004			X
APRILIA	AF 1 125	125	1987			X

AGPA194						
MARCA Brand	MODELLO Model	CC	DA From	A To	ANT. Front	POST. Rear
APRILIA	AF 1 125 EUROPA / FUTURA	125	1990	1991		X
APRILIA	AF 1 125 REPLICA / SINTESI	125	1989	1991		X
APRILIA	ETX 125	125	1986	1987		X
APRILIA	250 TUAREG RALLY	250	1986			X
APRILIA	RS 250	250	1995	2002		X
APRILIA	RS 250 R PISTE	250	2004			X
APRILIA	350 TUAREG	350	1986	1989		X
APRILIA	350 TUAREG WIND	350	1987	1988		X
APRILIA	ETX 350	350	1986			X
APRILIA	ETX 600	600	1986			X
APRILIA	600 TUAREG	600	1986	1987		X
APRILIA	600 TUAREG WIND	600	1988			X
APRILIA	RS 250	250	1995	2002		X
APRILIA	RS 250 R PISTE	250	2004			X
ARMSTRONG	MX 500	500	1986		X	
ARMSTRONG	MX 600	600	1986		X	
ASPES	125 SINTESI	125	1988			X
ATK	ATK 350 GS	350	1993		X	X
ATK	ATK 560	560	1984	1991	X	
ATK	ATK 640	640	1993		X	X
ATK	ATK 250 CC / MX	250	1991	1992		X
ATK	ATK 350 ES / CC / MX / STD	350	1991	1992		X
ATK	ATK 406 CC / MX	406	1991	1992		X
ATK	ATK 604 ES / CC / MX / STD	604	1991	1992		X
BENELLI	900 TORNADO 3	900	2000	2002		X
BENELLI	TNT 1100	1100	2004			X
BENELLI	124 T	124	1983		X	
BENELLI	125 2CE	125	1976	1978	X	
BENELLI	125 CUSTOM	125	1985		X	
BENELLI	125 SPORT	125			X	
BENELLI	125 T 76	125	1976		X	
BENELLI	125 TT	125			X	
BENELLI	BXK 125	125	1988		X	
BENELLI	E 125 LC	125	1985		X	
BENELLI	250 2CE	250			X	
BENELLI	250 DISC	250	1976		X	
BENELLI	304	304	1983		X	
BENELLI	350 4T TURISMO	350			X	
BENELLI	354	354	1978	1982	X	
BENELLI	354 SPORT	354	1983		X	X
BENELLI	500 4T	500	1976		X	
BENELLI	500 -4	500	1976		X	
BENELLI	654 SPORT	654	1983		X	X
BENELLI	125 JARNO	125	1989			X
BENELLI	BX 125	125	1989			X
BENELLI	900 TORNADO 3	900	2000	2002		X
BENELLI	TNT 1100	1100	2004			X
BETA	KR 50 TWIN	50	1988		X	X
BETA	KR 50	50	1986	1987	X	
BETA	CR 250	250	1983		X	
BETA	500 GS / RV	500	1984		X	
BETA	ALP 240	240	1996			X
BETA	ALP 260	260	1996	1998		X
BILLET	6 PISTON CALIPER - ROAD/RACING 3				X	
BIMOTA	YB7 400	400	1989-			X
BIMOTA	V DUE 500 TESI 2	500	1997			X
BIMOTA	600 BELLARIA	600	1991			X
BIMOTA	YB9 600 SRI	600	1996			X
BIMOTA	BB1 650 SUPERMONO	650	1996			X
BIMOTA	SB7 750	750	1996			X

ACCOSSATO

PASTIGLIE BRAKE PADS

APPLICAZIONI PER CODICE PASTIGLIA / applications for pads code

AGPA194						
MARCA Brand	MODELLO Model	CC	DA From	A To	ANT. Front	POST. Rear
BIMOTA	YB4 750	750	1989			X
BIMOTA	1D 851 TESI	851	1991	1995		X
BIMOTA	900 MANTRA	900	1996			X
BIMOTA	DB2 900	900	1992			X
BIMOTA	DB4 900	900	1999			X
BIMOTA	1D 904 TESI SR / ES	904	1996			X
BIMOTA	DB2 904 HF / SR	904	1996			X
BIMOTA	1D 906 TESI	906	1991	1995		X
BIMOTA	2D 1000 TESI	1000	2004	2006		X
BIMOTA	SB8 1000 R	1000	1998			X
BIMOTA	SB8K 1000	1000	2006			X
BIMOTA	SB8K 1000 SANTAMONICA	1000	2007			X
BIMOTA	YB11 1000	1000	1997			X
BIMOTA	YB6 1000	1000	1989			X
BIMOTA	YB8 1000	1000	1990	1995		X
BIMOTA	YB11 1002 DIECI	1002	1991	1995		X
BIMOTA	YB11 1002 SUPERLEGGERA	1002	1996			X
BIMOTA	DB7 1099 (RAD. CAL)	1099	2009			X
BIMOTA	SB6 1100	1100	1996			X
BIMOTA	SB6 1100 R	1100	1997			X
BIMOTA	1D TESI		1993			X
BIMOTA	DB2		1992			X
BIMOTA	ALL MODELS		1989	1998		X
BIMOTA	FURANO		1992			X
BIMOTA	YB9 600 SRI	600	1996			X
BIMOTA	SB7 750	750	1996			X
BIMOTA	YB4 750	750	1989			X
BIMOTA	1D 851 TESI	851	1991	1995		X
BIMOTA	DB2 900	900	1992			X
BIMOTA	DB4 900	900	1999			X
BIMOTA	900 MANTRA	900	1996			X
BIMOTA	1D 904 TESI SR / ES	904	1996			X
BIMOTA	DB2 904 HF / SR	904	1996			X
BIMOTA	1D 906 TESI	906	1991	1995		X
BIMOTA	2D 1000 TESI	1000	2004	2006		X
BIMOTA	SB8 1000 R	1000	1998			X
BIMOTA	YB6 1000	1000	1989			X
BIMOTA	YB8 1000	1000	1990	1995		X
BIMOTA	YB11 1000	1000	1997			X
BIMOTA	YB11 1002 DIECI	1002	1991	1995		X
BIMOTA	YB11 1002 SUPERLEGGERA	1002	1996			X
BIMOTA	DB7 1099 (RAD. CAL)	1099	2009			X
BIMOTA	SB6 1100 R	1100	1997			X
BIMOTA	SB6 1100	1100	1996			X
BIMOTA	1D TESI		1993			X
BIMOTA	DB2		1992			X
BIMOTA	ALL MODELS		1989	1998		X
BIMOTA	FURANO		1992			X
CAGIVA	50 COCIS	50	1989		X	X
CAGIVA	50 COCIS	50	1988		X	
CAGIVA	50 LUCKY EXPLORER	50	1988		X	
CAGIVA	50 PRIMA	50	1992		X	X
CAGIVA	50 SUPERCITY	50	1992		X	X
CAGIVA	50 W4	50	1992		X	X
CAGIVA	LR 80	80	1983		X	
CAGIVA	SST 80	80	1983		X	
CAGIVA	SXT 80	80	1983		X	
CAGIVA	80 COCIS	80	1991		X	
CAGIVA	80 SUPER CITY	80	1992	1993	X	X
CAGIVA	80 W4	80	1992		X	X
CAGIVA	125 ALETTA ELECTRA	125	1987		X	

AGPA194						
MARCA Brand	MODELLO Model	CC	DA From	A To	ANT. Front	POST. Rear
CAGIVA	125 ALETTA ORO	125	1986		X	X
CAGIVA	125 DAKAR	125	1986		X	
CAGIVA	125 ELEFANT RE	125	1987		X	
CAGIVA	W8 125	125	1992		X	X
CAGIVA	200 ELEFANT	200	1986		X	
CAGIVA	SST 250 ALA VERDE	250	1981		X	
CAGIVA	350 ALAZURRA	350	1985		X	X
CAGIVA	SST 350 ALA VERDE	350	1981		X	
CAGIVA	SST 350	350	1983		X	
CAGIVA	SXT 350 ALA ROSSA	350	1982		X	
CAGIVA	T4 350 E	350	1987		X	
CAGIVA	T4 350 R	350	1987		X	
CAGIVA	MXR 400	400	1982		X	
CAGIVA	MXR 500	500	1982		X	
CAGIVA	T4 500 E	500	1987		X	
CAGIVA	650 ALAZURRA	650			X	X
CAGIVA	750 ELEFANT	750	1988		X	X
CAGIVA	125 ENDURO	125	1986		X	
CAGIVA	WMX 125 GP REPLICA	125	1986		X	
CAGIVA	WRX 125	125	1983		X	
CAGIVA	WMX 250 GP	250	1982		X	
CAGIVA	MXR 250	250	1982		X	
CAGIVA	WMX 500 CROSS	500	1987		X	X
CAGIVA	WMX 500	500	1985	1986	X	
CAGIVA	50 SUPERCITY	50	1993			X
CAGIVA	80 SUPER CITY	80	1994			X
CAGIVA	125 BLUES	125	1995			X
CAGIVA	125 FRECCIA	125	1989			X
CAGIVA	125 FRECCIA C12 R	125	1991			X
CAGIVA	125 MITO	125	1993			X
CAGIVA	125 MITO EV / SP	125	1995			X
CAGIVA	125 MITO RACER	125	1991	1992		X
CAGIVA	125 N1	125	1997			X
CAGIVA	125 PLANET	125	1998	2002		X
CAGIVA	125 RAPTOR	125	2003			X
CAGIVA	125 SUPERCITY	125	1992	1995		X
CAGIVA	125 SUPERCITY	125	1998			X
CAGIVA	K7 125	125	1991			X
CAGIVA	350 W 12	350	1992			X
CAGIVA	350 ELEFANT	350	1986			X
CAGIVA	500 MITO	500	2007			X
CAGIVA	500 RIVER	500	2000			X
CAGIVA	SP 525 MITO	525	2008			X
CAGIVA	600 RIVER	600	1994	1995		X
CAGIVA	650 ELEFANT	650	1986			X
CAGIVA	750 LUCKY EXPLORER	750	1988			X
CAGIVA	500 MITO	500	2007			X
CAGIVA	SP 525 MITO	525	2008			X
DB MOTORS	ZZ 50 PIRAT	50	2000		X	X
DB MOTORS	50 SPORT	50	2000		X	X
DERBI	250 RC	250	1985		X	
DERBI	125 MULHACÉN	125	2007			X
DERBI	125 TERRA	125	2007			X
DUCATI	350	350	1975		X	
DUCATI	350 F3	350	1986		X	X
DUCATI	350 GTV	350	1977		X	X
DUCATI	350 PASO	350	1986		X	X
DUCATI	350 SPORT	350	1977		X	X
DUCATI	500 GTV	500	1977		X	X
DUCATI	500 SPORT DESMO	500	1977		X	
DUCATI	500 TWIN GTL	500	1975		X	

PASTIGLIE BRAKE PADS

APPLICAZIONI PER CODICE PASTIGLIA / applications for pads code

ACCOSSATO

AGPA194						
MARCA Brand	**MODELLO** Model	**CC**	**DA** From	**A** To	**ANT.** Front	**POST.** Rear
DUCATI	750 PASO	750	1986		X	X
DUCATI	750 PASO	750	1988		X	X
DUCATI	350 INDIANA	350	1986			X
DUCATI	400 MONSTER (JAPAN)	400	2002			X
DUCATI	400 SS JUNIOR	400	1992			X
DUCATI	400 SS NUDA	400	1992			X
DUCATI	500 PANTAH	500	1985			X
DUCATI	502 SINGLE	502	1993			X
DUCATI	502 SUPERMONO	502	1993			X
DUCATI	600 MONSTER	600	1994	2001		X
DUCATI	600 PANTAH TL / SL	600	1981			X
DUCATI	600 SUPERSPORT	600	1994	1995		X
DUCATI	620 MONSTER	620	2005	2006		X
DUCATI	620 MONSTER DARK	620	2006			X
DUCATI	620 MONSTER DARK I.E	620	2002	2005		X
DUCATI	620 MONSTER I.E	620	2002	2005		X
DUCATI	620 MONSTER SI.E	620	2002	2005		X
DUCATI	650 INDIANA	650	1986			X
DUCATI	695 MONSTER	695	2006			X
DUCATI	748 BIPOSTO / SP / STRADA	748	1995	1999		X
DUCATI	748 / S	748	1999	2003		X
DUCATI	748 R	748	2000	2003		X
DUCATI	748 SPS	748	1998	1999		X
DUCATI	750 CARENARA / NUDA	750	1992			X
DUCATI	750 INDIANA	750	1987	1990		X
DUCATI	750 MONSTER	750	1996	1999		X
DUCATI	750 MONSTER / MONSTER I.E	750	2000	2002		X
DUCATI	750 PASO	750	1987			X
DUCATI	750 SUPERSPORT	750	1995	1999		X
DUCATI	800 MONSTER I.E / SI.E	800	2003	2005		X
DUCATI	800 MONSTER S2R	800	2005	2007		X
DUCATI	800 MONSTER S2R DARK	800	2005	2006		X
DUCATI	851 STRADA	851	1989			X
DUCATI	851 SUPERBIKE	851	1990			X
DUCATI	888 SPO	888	1993			X
DUCATI	888 SPS / SP4	888	1992			X
DUCATI	888 SPV	888	1992	1994		X
DUCATI	888 STRADA / SUPERBIKE	888	1993			X
DUCATI	906 900 PASO	900	1989			X
DUCATI	907 900 I. E.	900	1992			X
DUCATI	900 MONSTER IL	900	1993			X
DUCATI	900 SSR	900	1999			X
DUCATI	900 SUPERLIGHT	900	1992	1995		X
DUCATI	900 SUPERSPORT	900	1995	1997		X
DUCATI	916 BIPOSTO	916	1994	1997		X
DUCATI	916 MONSTER S4	916	2001	2003		X
DUCATI	916 SP / STRADA / SENNA	916	1994	1997		X
DUCATI	916 SPS	916	1997	1998		X
DUCATI	996 MONSTER S4R	996	2004	2005		X
DUCATI	996 R	996	2001			X
DUCATI	996 SPS	996	1999	2001		X
DUCATI	998 / S	998	2002	2003		X
DUCATI	998 R	998	2002			X
DUCATI	1000 MONSTER DARK I.E / SI.E	1000	2003	2005		X
DUCATI	1000 MONSTER I.E / SI.E	1000	2003	2005		X
DUCATI	1000 SUPERSPORT DS	1000	2003			X
DUCATI	748 / S	748	1999	2003		X
DUCATI	748 BIPOSTO / SP / STRADA	748	1995	1999		X
DUCATI	748 R	748	2000	2003		X

AGPA194						
MARCA Brand	**MODELLO** Model	**CC**	**DA** From	**A** To	**ANT.** Front	**POST.** Rear
DUCATI	748 SPS	748	1998	1999		X
DUCATI	916 BIPOSTO	916	1995	1997		X
DUCATI	916 SP / STRADA / SENNA	916	1994	1997		X
DUCATI	916 SPS	916	1997	1998		X
DUCATI	996 R	996	2001			X
DUCATI	996 SPS	996	1999	2001		X
DUCATI	998 / S	998	2002	2003		X
DUCATI	998 R	998	2002			X
FANTIC	50 KOALA	50	1988		X	X
FANTIC	125 CRUISER	125	1998		X	
FANTIC	XM 50 CABALLERO	50	1998		X	X
FANTIC	RS 50 CABALLERO	50	1991		X	X
FANTIC	RC 50 CABALLERO	50	1991		X	X
FANTIC	250 COACH	250	1991		X	
GARELLI	50 TIGER XLE	50	1986		X	X
GARELLI	125 GTA	125	1983	1985	X	X
GARELLI	CYCLONE LC		1986		X	
GARELLI	URKA	50	1991		X	
GILERA	RC 50 TOP RALLY	50	1990		X	X
GILERA	RI 50	50	1991		X	
GILERA	RK 50	50	1996		X	X
GILERA	50 RALLY	50	1987		X	
GILERA	50 SIOUX	50	1992		X	X
GILERA	125 HX / HE	125	1983		X	
GILERA	RX 125 ARIZONA HAWK	125	1986		X	
GILERA	RX 125	125	1983		X	
GILERA	RX 200	200	1983		X	
GILERA	250 ARIZONA HAWK	250	1986		X	
GILERA	250 ARIZONA RALLY	250	1986		X	
GILERA	SP		2001	1990		X
GILERA	125 CRONO	125	1992			X
GILERA	125 CX	125	1991			X
GILERA	125 FAST BIKE	125	1988			X
GILERA	125 FREESTYLE	125	1992			X
GILERA	125 KK / KR / KZ	125	1986			X
GILERA	125 MX1 / MXR	125	1989			X
GILERA	125 R1 / R1S	125	1990			X
GILERA	125 SP	125	2001	2002		X
GILERA	MXR 125	125	1990			X
GILERA	XR2 125	125	1990			X
GILERA	200 FAST BIKE	200	1987			X
GILERA	RV 200	200	1985	1986		X
GILERA	NGR 250	250	1985			X
GILERA	350 SATURNO BIALBERO	350	1990			X
GILERA	XRT 350	350	1990			X
GILERA	500 SATURNO BIALBERO	500	1990			X
GILERA	500 SATURNO PIUMA	500	1990			X
GILERA	600 NORDWEST	600	1991			X
GILERA	RC 600	600	1988			X
GILERA	XRT 600	600	1989			X
HERCULES	ZX		1986		X	
HONDA	CRM 125 / R	125	1990	1998		X
HONDA	NSR 125 F / R	125	1990	1992		X
HONDA	NSR 125 R (ITALY)	125	1989			X
HUSQVARNA	CR 125	125	1985	1990	X	
HUSQVARNA	CX 125	125	1984	1985	X	
HUSQVARNA	CR 240	240	1984	1985	X	
HUSQVARNA	CR 250	250	1985	1987	X	
HUSQVARNA	XC 250	250		1985	X	
HUSQVARNA	WR 400 ENDURO	400	1985		X	
HUSQVARNA	430 ENDURO	430	1985		X	

ACCOSSATO

PASTIGLIE BRAKE PADS

APPLICAZIONI PER CODICE PASTIGLIA / applications for pads code

AGPA194						
MARCA Brand	MODELLO Model	CC	DA From	A To	ANT. Front	POST. Rear
HUSQVARNA	CR 500	500	1986		X	
HUSQVARNA	XC 500	500	1985		X	
HUSQVARNA	TC 500	500	1986		X	
HUSQVARNA	504	504	1983		X	
HUSQVARNA	TE 510	510	1986	1987	X	
ISR	2 PISTON CALIPER (22-027/028/029) - ROAD/RACING 2				X	
ITALJET	350 ROAD MASTER	350	1983		X	
ITALJET	900 GRIFFON	900	2000			X
KEEWAY	125 ENDURO	125	2007			X
KEEWAY	125 X-RAY	125	2007			X
KTM	BAJA		1986		X	
KTM	COUNTRY / BAJA		1985		X	
KTM	RSV 50	50	1986		X	
KTM	80 PL/RSL/ L/ RS/ RL/ CHOPPER	80	1980		X	X
KTM	MX 50	50	1991		X	
KTM	GXE 50	50	1987		X	
KTM	GXE 50	50	1989		X	
KTM	GXR 50	50	1989		X	
KTM	MX 50	50	1987	1991	X	
KTM	MX 80	80	1986	1992	X	
KTM	MX 85	85	1990		X	
KTM	LC 125	125	1985	1986	X	
KTM	MX 125	125	1985		X	
KTM	MX 125	125	1986		X	X
KTM	XC 125	125	1985		X	
KTM	XC 125	125	1986		X	X
KTM	250 BAJA	250	1986		X	
KTM	LC 250	250	1985		X	
KTM	LC 250	250	1986		X	X
KTM	MC 250	250	1983	1984	X	X
KTM	MX 250	250	1983	1984	X	X
KTM	MX 250	250	1985		X	
KTM	MX 250	250	1986		X	X
KTM	XC 250	250	1985		X	
KTM	XC 250	250	1986	1989	X	X
KTM	XC 300	300	1985		X	
KTM	XC 300	300	1986	1990	X	X
KTM	XC 350 /MC	350		1983	X	
KTM	GS 350 500 K4	350		1983	X	
KTM	350 COUNTRY CROSS	350	1985		X	
KTM	GS 350	350	1983	1986	X	
KTM	XC 390 / MC	390		1983	X	
KTM	GS 390	390	1983		X	
KTM	XC 420 / MC	420		1983	X	
KTM	MC 495 LELEU	495	1982	1983	X	
KTM	MX 495 LELEU	495	1982	1983	X	
KTM	XC 500 / MC	500		1983	X	
KTM	GS 500 500K4 ENDURO	500	1983		X	
KTM	LC 500	500	1985		X	
KTM	LC 500	500	1986		X	X
KTM	MX 500	500	1985		X	
KTM	MX 500	500	1986		X	X
KTM	4T 600 ENDURO	600	1984		X	
KTM	GS 600	600	1985		X	
KTM	XC 600 CROSS / XCE CROSS	600	1985		X	
KTM	620 DUKE	620	1994	1998	X	
LAVERDA	50 GAUCHO	50	1992		X	

AGPA194						
MARCA Brand	MODELLO Model	CC	DA From	A To	ANT. Front	POST. Rear
LAVERDA	OR 50 ATLAS	50	1986		X	
LAVERDA	OR 50 ATLAS	50	1990		X	
LAVERDA	CU 125 RIDE	125	1986		X	
LAVERDA	LB 125 UNO	125	1985		X	
LAVERDA	125 CUSTOM	125	1986		X	
LAVERDA	GS 350 LESMO	350	1986		X	X
LAVERDA	PF 350 ALPINO	350			X	X
LAVERDA	RS 350 ALPINO	350			X	X
LAVERDA	500 ALPINO / S	500	1977		X	X
LAVERDA	OR 600 ATLAS	600	1986			X
LAVERDA	650 GHOST	650	1996			X
LAVERDA	650 GHOST LEGEND	650	1997			X
LAVERDA	650 SPORT	650	1992			X
LAVERDA	650 STRIKE	650	1997			X
LAVERDA	668 DIAMANTE	668	1997			X
LAVERDA	668 GHOST STRIKE	668	1998			X
LAVERDA	668	668	1996			X
LAVERDA	750 CUP	750	1998			X
LAVERDA	750 DIAMANTE	750	1997			X
LAVERDA	750 GHOST STRIKE	750	1997			X
LAVERDA	750 S / S FORMULA / STRIKE	750	1997			X
LAVERDA	750 S SPORT	750	1999			X
MAICO	GM 250 LC	250	1985		X	
MAICO	MD 250	250	1983		X	X
MAICO	GM 500 LC	500	1985		X	
MALAGUTI	50 ENDURO	50	1985		X	
MALAGUTI	MRX 50	50	1989		X	
MONTESA	260 EVASION	260	1992			X
MONTESA	309 COTA	309	1989			X
MONTESA	310 COTA	310	1989			X
MONTESA	311 COTA TRIAL	311	1992			X
MOTO GUZZI	125 BX	125	1992		X	X
MOTO GUZZI	125 CUSTOM	125	1985		X	
MOTO GUZZI	125 ENDURO TT	125	1985		X	
MOTO GUZZI	240 / 4	240	1977		X	
MOTO GUZZI	250 TS	250	1975	1976	X	
MOTO GUZZI	350	350	1977		X	X
MOTO GUZZI	350 FALCO	350	1988		X	X
MOTO GUZZI	350 IMOLA	350	1978		X	X
MOTO GUZZI	350 NEVADA	350	1992		X	X
MOTO GUZZI	NTX 350	350	1988		X	X
MOTO GUZZI	NTX 350	350	1990		X	
MOTO GUZZI	V35 350 GT	350			X	
MOTO GUZZI	V35 350 II / IMOLA / IMOLA II	350	1977		X	X
MOTO GUZZI	V35 350 C	350				X
MOTO GUZZI	V35 350 FLORIDA	350				X
MOTO GUZZI	V35 350 GT	350	1990			X
MOTO GUZZI	400	400	1979		X	X
MOTO GUZZI	500	500	1977		X	X
MOTO GUZZI	V50 500 1/2/3/ MONZA / CHOPPER	500	1977		X	X
MOTO GUZZI	500 MONZA	500	1978		X	X
MOTO GUZZI	650	650	1980		X	X
MOTO GUZZI	GT 650 SESSANTACINQUE	650	1989		X	X
MOTO GUZZI	NTX 650	650	1990		X	
MOTO GUZZI	V65 650 LARIO	650	1986		X	X
MOTO GUZZI	V65 650 NTX	650	1987		X	X
MOTO GUZZI	V65 650 SP / CHOPPER	650			X	X

PASTIGLIE BRAKE PADS

APPLICAZIONI PER CODICE PASTIGLIA / applications for pads code

AGPA194						
MARCA Brand	**MODELLO** Model	**CC**	**DA** From	**A** To	**ANT.** Front	**POST.** Rear
MOTO GUZZI	V65 650 TT	650	1986		X	X
MOTO GUZZI	750 NEVADA	750	1991	1992	X	X
MOTO GUZZI	750 NEVADA CLUB	750	1998	2001	X	
MOTO GUZZI	750 TARGA	750	1989		X	X
MOTO GUZZI	NTX 750	750	1989		X	X
MOTO GUZZI	V7 750 IPPOGRIFO	750	1997			X
MOTO GUZZI	V10 CENTAURO	992	1997	1999		X
MOTO GUZZI	RS 1000 DAYTONA	1000	1997			X
MOTO GUZZI	1000 QUOTA	1000	1992	1997		X
MOTO GUZZI	1100 CALIFORNIA EV (SINGLE PIN PAD FIXING)	1100	1997	2000		X
MOTO GUZZI	1100 SPORT	1100	1994	1999		X
MOTO GUZZI	1100 SPORT CORSA	1100	1998	1999		X
MOTO GUZZI	V11 1100 LEMANS (ALL MODELS)	1100	2001	2004		X
MOTO GUZZI	V11 1100 SCURA / SPORT SCURA	1100	2002			X
MOTO GUZZI	V11 1100 SPORT	1100	1997	2000		X
MOTO GUZZI	V11 1100 SPORT (ALL MODELS)	1100	2001			X
MOTO MORINI	400 S	400			X	X
MOTO MORINI	RLX 350 EXCALIBUR	350	1990			X
MOTO MORINI	350 COGUARO / NEW YORK	350	1990			X
MOTO MORINI	350 DART	350	1988			X
MOTO MORINI	350 INDIANA	350	1988			X
MOTO MORINI	350 KANGURO	350	1987			X
MOTO MORINI	400 DART	400	1989			X
MOTO MORINI	501 CAMEL	501	1988			X
MOTO MORINI	501 COGUARO	501	1989			X
MOTO MORINI	501 EXCALIBUR	501	1989			X
MOTO MORINI	RLX 501 EXCALIBUR	501	1990			X
MOTO MORINI	501 NEW YORK	501	1989			X
MOTO MORINI	650 INDIANA	650	1988			X
MOTO MORINI	750 INDIANA	750	1988			X
MZ / MUZ	660 MASTIFF 17"	660	1999	2005		X
MZ / MUZ	660 SKORPION SPORT / CUP	660	1995	2001		X
MZ / MUZ	660 SKORPION REPLICA	660	1995	2001		X

AGPA194						
MARCA Brand	**MODELLO** Model	**CC**	**DA** From	**A** To	**ANT.** Front	**POST.** Rear
MZ / MUZ	660 SKORPION TOUR / TRAVELLER	660	1995	2002		X
NORTON	588 F-1 (ROTARY) P55 MODEL	588	1990			X
SANGLAS	400 Y	400	1979	1980	X	X
SANGLAS	500 S2	500	1979	1980	X	X
SIMSON	SR 80 2 CE	80			X	
SIMSON	80 IFA	80	1989		X	
SIMSON	S 83 CX	83			X	
SIMSON	S 83 OR	83			X	
SWM	125 GP	125	1986		X	X
SWM	125 S1 - S2	125			X	
SWM	250 S1 - S2	250			X	
SWM	250 EXPLORER	250	1986		X	X
SWM	250 PIONER	250	1986		X	X
SWM	TRL 329 MJ	329	1986		X	
TM	SMM 125 BLACK DREAM (RIM BRAKE)	125	2004	2007		X
TM	SMM 125 BLACK DREAM (2T)	125	2008	2010		X
TM	SMM 250 (2T)	250	2005	2010		X
TM	SMM 300 (2T)	300	2005	2010		X
TM	SMM 400 (4T) (RIM BRAKE)	400	2004			X
TM	SMM 450 F BLACK DREAM ES	450	2008	2010		X
TM	SMM 530 F BLACK DREAM (RIM BRAKE)	530	2004	2007		X
TM	SMM 530 F BLACK DREAM ES	530	2008	2010		X
VOXAN	1000 CHARADE RACING	1000	2006			X
YAMAHA	TDR 125 R (3SH2/3XE2) LIGHTBURNER	125	1993	1994		X
YAMAHA	TZR 125 R (4DL1 / 4DL2) BREMBO CALIPER	125	1991	1993		X
YAMAHA	TZR 125 RR (4DL3) BREMBO CALIPER	125	1994	1995		X
YAMAHA	SZR 660	660	1996	1997		X

ACCOSSATO

PASTIGLIE BRAKE PADS

APPLICAZIONI PER CODICE PASTIGLIA / applications for pads code

MESCOLA EV1 E EV2 ev1 and ev2 compounds
EV1 / EV2

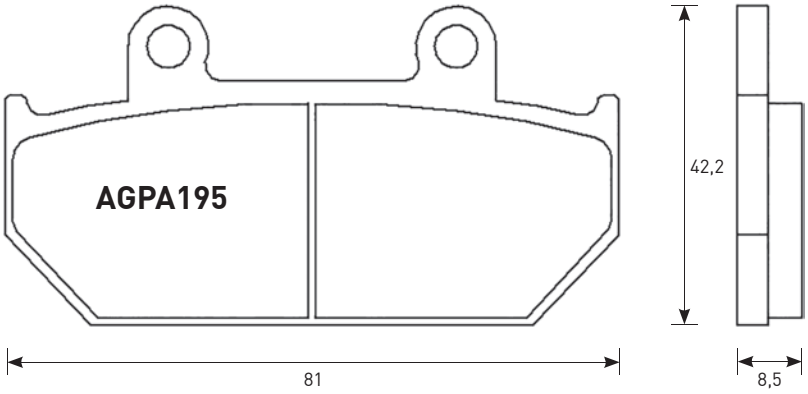

CROSS REFERENCE	
EBC	FA121
BRAKING	704
NEWFREN	.FD.0106
BREMBO	07HO2107
FERODO	FDB462
CL	2252
SBS	593

EQUIVALENT OE #	
OEM Honda	45105 MV1 405
OEM Honda	45105 MV1 008

AGPA195						
MARCA Brand	MODELLO Model	CC	DA From	A To	ANT. Front	POST. Rear
HONDA	CBR 250 F	250	1986		X	
HONDA	CBR 250 HURRICANE	250	1987		X	
HONDA	NSR 250 R	250	1987		X	
HONDA	VT 250 F	250	1988	1990	X	
HONDA	VTR 250	250	1990		X	
HONDA	VTZ 250	250	1988		X	

AGPA195						
MARCA Brand	MODELLO Model	CC	DA From	A To	ANT. Front	POST. Rear
HONDA	CB 350 S. G.	350	1987	1990	X	
HONDA	NX 350	350	1992		X	
HONDA	CB 400 N	400	1986		X	
HONDA	CBR 400 R	400	1987		X	
HONDA	CBR 400 F	400	1992		X	
HONDA	VFR 400 R NC21 / NC21 Z	400	1986		X	X
HONDA	VFR 400 R NC24	400	1987		X	
HONDA	CB 450 S	450	1986		X	
HONDA	CBR 500 F (AUSTRIA)	500	1987	1990	X	
HONDA	CBR 600 F / F SUPERSPORT	600	1991	1994	X	
HONDA	CBR 600 F HURRICANE	600	1987	1990	X	
HONDA	NTV 600 RÉVÉRÉ	600	1988		X	
HONDA	VT 600 C SHADOW	600	1989	1991	X	
HONDA	XRV 750 AFRICA TWIN	750	1990	1992	X	

MESCOLA EV1 ev1 compound
EV1

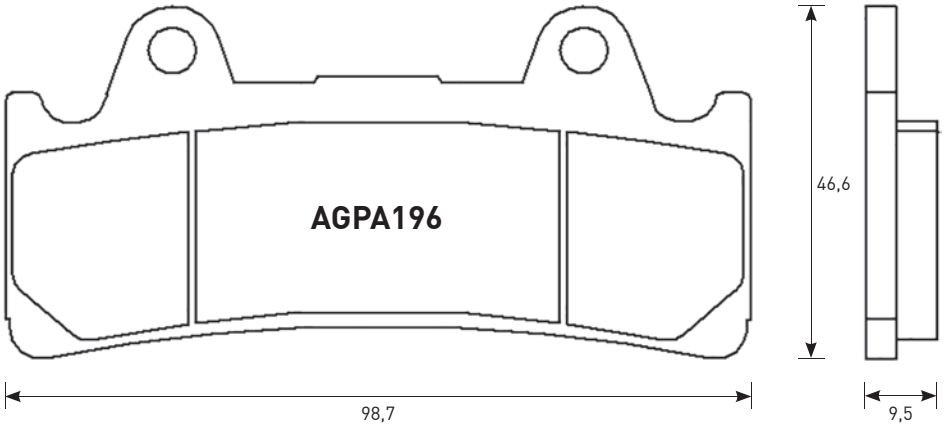

CROSS REFERENCE	
EBC	FA190
NEWFREN	.FD.0201
FERODO	FDB864
CL	2254
SBS	683

EQUIVALENT OE #	
OEM Triumph	T2020211
OEM Yamaha	4FM W0045 10
OEM Yamaha	4FM W0045 00
OEM Yamaha	4FM W0045 20
OEM Yamaha	4FMW004530

AGPA196						
MARCA Brand	MODELLO Model	CC	DA From	A To	ANT. Front	POST. Rear
TRIUMPH	900 DAYTONA SUPER III	900	1994	1997	X	
YAMAHA	YZF 750 R / SP	750	1993	1997	X	
YAMAHA	FZR 1000 EXUP	1000	1994	1995	X	

PASTIGLIE BRAKE PADS

APPLICAZIONI PER CODICE PASTIGLIA / applications for pads code

MESCOLA EV1 ev1 compound
EV1

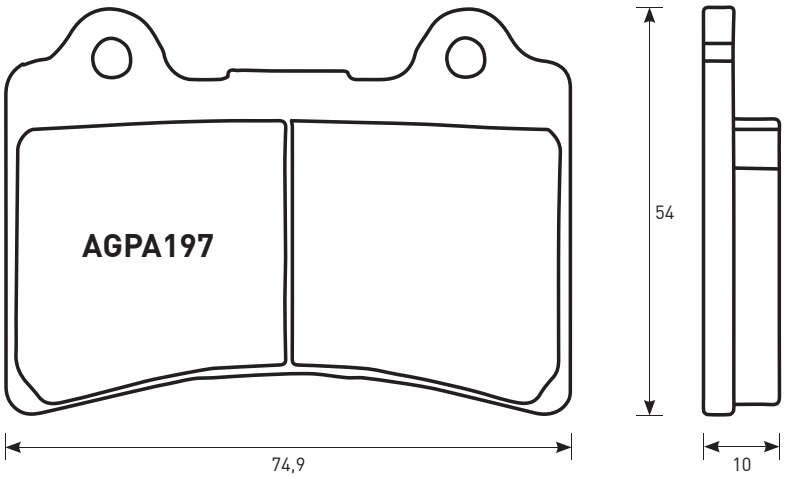

CROSS REFERENCE	
EBC	FA123
BRAKING	692
NEWFREN	.FD.0104
BREMBO	07YA1711
FERODO	FDB662
CL	2305
SBS	590

EQUIVALENT OE #	
OEM Yamaha	4NK W0045 00
OEM Yamaha	4NK W0046 00
OEM Yamaha	4NK W0045 01
OEM Yamaha	3GM W0045 03

AGPA197

MARCA Brand	MODELLO Model	CC	DA From	A To	ANT. Front	POST. Rear
YAMAHA	FZR 250	250	1987	1988	X	
YAMAHA	TDR 250	250	1988	1992	X	
YAMAHA	TZR 250	250	1987	1992	X	
YAMAHA	FZR 400 R SP (2TK-EXUP)	400	1987		X	
YAMAHA	FZR 400 (3EN1)	400	1988		X	
YAMAHA	FZR 400 R (3EN2)	400	1989		X	

AGPA197

MARCA Brand	MODELLO Model	CC	DA From	A To	ANT. Front	POST. Rear
YAMAHA	SRX 400 (3VN)	400	1990	1996	X	
YAMAHA	SRX 600 (3SX)	600	1990		X	
YAMAHA	FZ 750	750	1989	1991	X	
YAMAHA	FZR 750 R GENESIS	750	1987	1988	X	
YAMAHA	TDM 850	850	1991	1995	X	
YAMAHA	TRX 850	850	1996	1999	X	
YAMAHA	FZR 1000 GENESIS	1000	1987	1989	X	
YAMAHA	FJ 1200 (3CV/CXW TYPE)	1200	1988	1995	X	
YAMAHA	XJR 1200 / SP	1200	1995	1998	X	
YAMAHA	XVZ 1300 A ROYAL STAR / TOUR CLASSIC	1300	1996	2001		X
YAMAHA	XVZ 1300 TF VENTURE STAR	1300	1999	2001		X
YAMAHA	XVZ 1300 VENTURE ROYALE	1300	1986	1995		X
YAMAHA	XV 1600 A WILD STAR	1600	1999	2004		X

MESCOLA EV1 ev1 compound
EV1

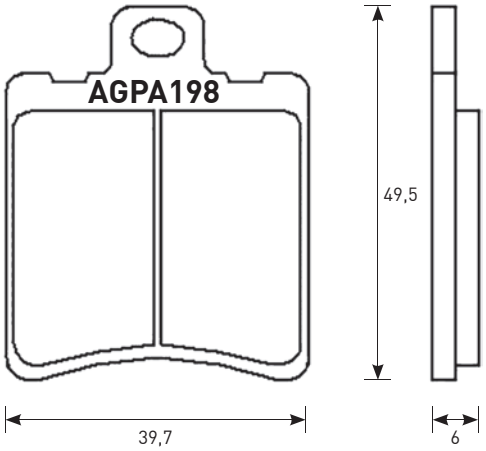

CROSS REFERENCE	
EBC	FA193
FERODO	DP680
CL	2307
SBS	697

EQUIVALENT OE #	
11943900	4CUW004500
11946800	4VVF581100
11950200	5MEFS81100
2525370000	5MFF581100
2525240000	5RWFS81100
5930009820	8113638
5930035810	8113644
5933009EF0	8113663
5,93E+06	8213192
0645GBM750	8213245
06455GCM900	8213246
06455GBY910	498408
3YKW04501	R43420091A0
4CUF581120	R43420211A0
R44420041A0	8213638
75267	647172
498454	45120J4AT000
8213223	PE759057
8213571	1PHF580600
8213590	QCA0648860000

AGPA198

MARCA Brand	MODELLO Model	CC	DA From	A To	ANT. Front	POST. Rear
BERINGER	2 Piston Caliper - Road 1				X	
BERINGER	6 Piston Caliper - Road 3				X	
BREMBO	P 30 A - Road 1				X	

ACCOSSATO

PASTIGLIE BRAKE PADS

APPLICAZIONI PER CODICE PASTIGLIA / applications for pads code

MESCOLA EV1 ev1 compound
EV1

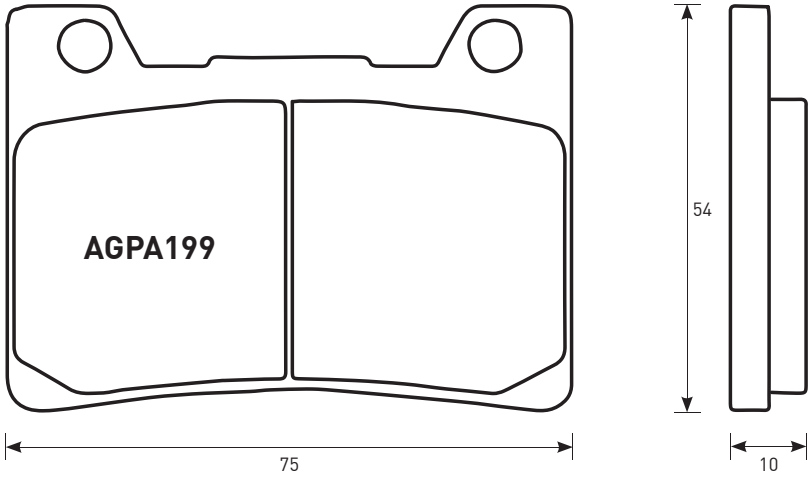

CROSS REFERENCE	
EBC	FA182
NEWFREN	.FD.0176
BREMBO	07YA2609
FERODO	FDB637
CL	2309
SBS	665

EQUIVALENT OE #	
OEM Yamaha	3GM W0045 60

AGPA199						
MARCA Brand	MODELLO Model	CC	DA From	A To	ANT. Front	POST. Rear
YAMAHA	FZR 1000 EXUP	1000	1991	1992	X	

MESCOLA EV1 ev1 compound
EV1

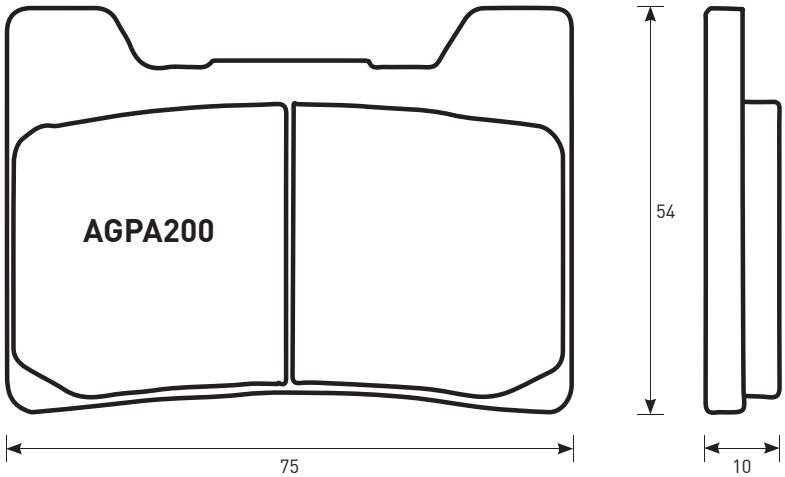

CROSS REFERENCE	
EBC	FA160
BRAKING	729
NEWFREN	.FD.0191
BREMBO	07YA2409
FERODO	FDB666
CL	2311
SBS	645

EQUIVALENT OE #	
OEM Yamaha	36M W0045 02
OEM Yamaha	3GM W0045 02
OEM Yamaha	3GM W0045 01

AGPA200						
MARCA Brand	MODELLO Model	CC	DA From	A To	ANT. Front	POST. Rear
YAMAHA	FZR 600 / R	600	1990	1995	X	
YAMAHA	TDM 850	850	1996	2001	X	
YAMAHA	FZR 1000 EXUP	1000	1989	1990	X	
YAMAHA	FJ 1200 A ABS	1200	1991	1995	X	
YAMAHA	XV 1200 V-Max	1200	1993	2001	X	

PASTIGLIE BRAKE PADS

APPLICAZIONI PER CODICE PASTIGLIA / applications for pads code

MESCOLA EV1 ev1 compound
EV1

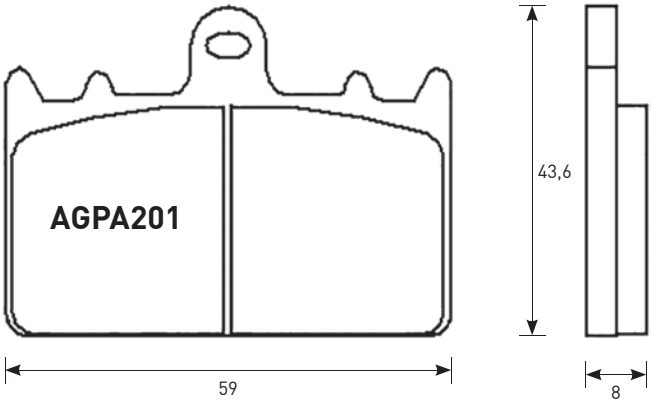

CROSS REFERENCE	
EBC	**FA180**
NEWFREN	**.FD.0185**
BREMBO	**07KA1406**
FERODO	**FDB741**
CL	**2363**
SBS	**666**

EQUIVALENT OE #	
OEM Kawasaki	**43082 1130**
OEM Kawasaki	**43082 1112**

AGPA201						
MARCA Brand	**MODELLO** Model	**CC**	**DA** From	**A** To	**ANT.** Front	**POST.** Rear
KAWASAKI	**ZXR 400 L1 / L2 / L3 / L4 / L5**	**400**	**1991**	**2002**	**X**	
SUZUKI	**RGV 250 Gamma T (RGVR 250 SP)**	**250**	**1996**		**X**	

MESCOLA EV1 E EV2 ev1 and ev2 compounds
EV1 / EV2

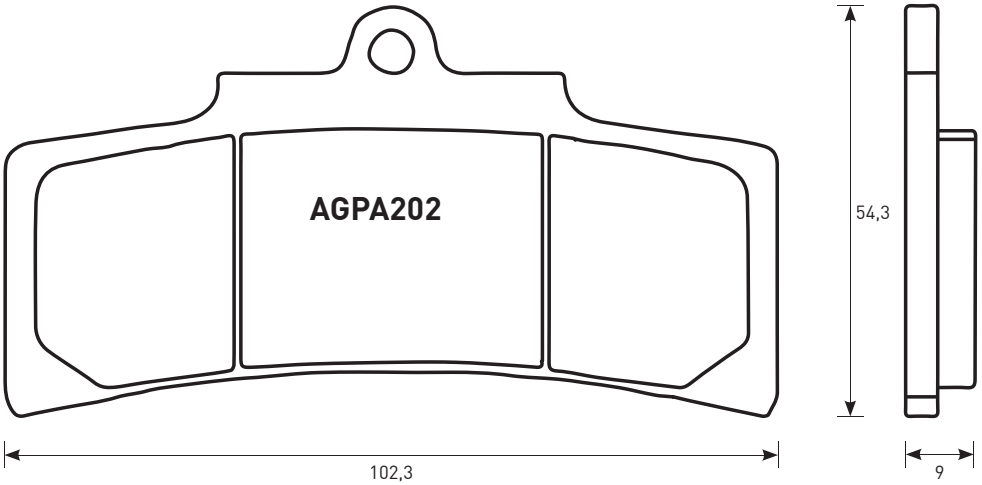

CROSS REFERENCE	
EBC	**FA183**
FERODO	**FRP417**
CL	**2584**
SBS	**677**

EQUIVALENT OE #	
/	**/**

AGPA202						
MARCA Brand	**MODELLO** Model	**CC**	**DA** From	**A** To	**ANT.** Front	**POST.** Rear
PVM	**6 Piston Caliper - Racing**				**X**	

ACCOSSATO

PASTIGLIE BRAKE PADS

APPLICAZIONI PER CODICE PASTIGLIA / applications for pads code

MESCOLA EV1 E EV2 ev1 and ev2 compounds
EV1 / EV2

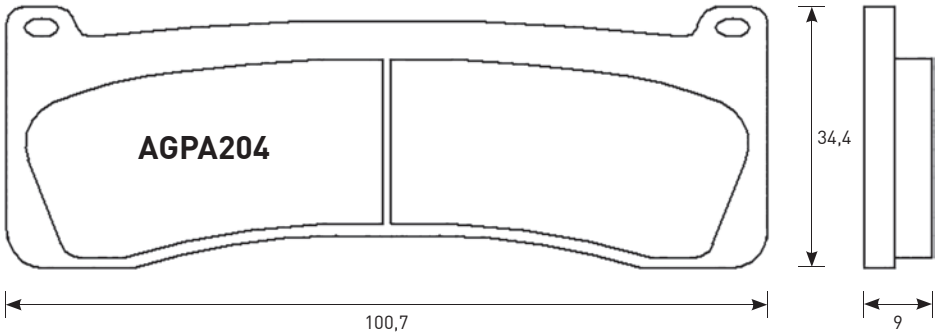

CROSS REFERENCE	
EBC	FA263
NEWFREN	.FD.0369
FERODO	FDB2043/FDB2167
CL	2720
SBS	707

EQUIVALENT OE #	
/	/

AGPA204						
MARCA Brand	MODELLO Model	CC	DA From	A To	ANT. Front	POST. Rear
AP RACING	6 Piston Caliper - Road/Racing				X	

MESCOLA EV2 ev2 compound
EV2

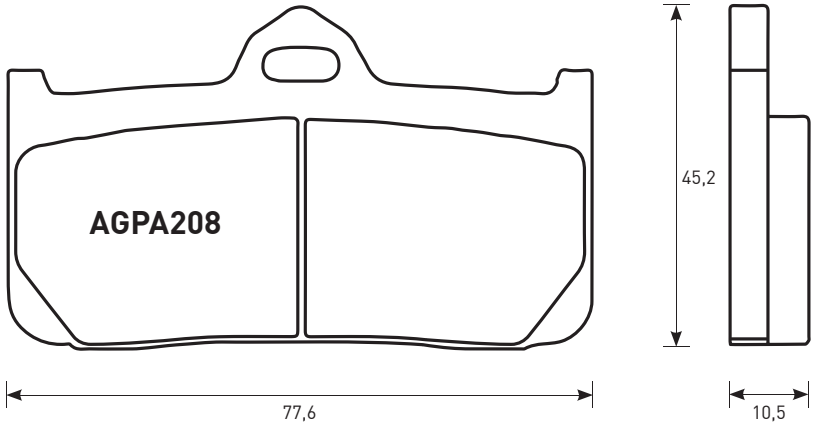

CROSS REFERENCE	
EBC	FA211/2
NEWFREN	.FD.0215
FERODO	FDB2008
CL	2933

EQUIVALENT OE #	
/	/

AGPA208						
MARCA Brand	MODELLO Model	CC	DA From	A To	ANT. Front	POST. Rear
BREMBO	4 Piston Caliper - Racing				X	
PVM	4 Piston Caliper - Racing				X	

PASTIGLIE BRAKE PADS

APPLICAZIONI PER CODICE PASTIGLIA / applications for pads code

MESCOLA EV1 E EV2 ev1 and ev2 compounds
EV1 / EV2

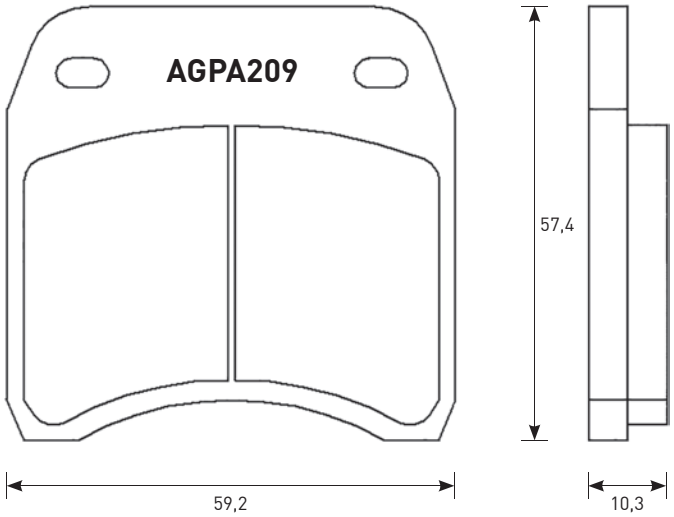

CROSS REFERENCE	
EBC	**FA016**
FERODO	**FRP213**
CL	**2950**
SBS	**698**

EQUIVALENT OE #	
	4741537

AGPA209						
MARCA Brand	**MODELLO** Model	**CC**	**DA** From	**A** To	**ANT.** Front	**POST.** Rear
AP RACING	**CP 2868 Caliper - Road/Racing**				**X**	

MESCOLA SINTERIZZATA sintered compound
ST

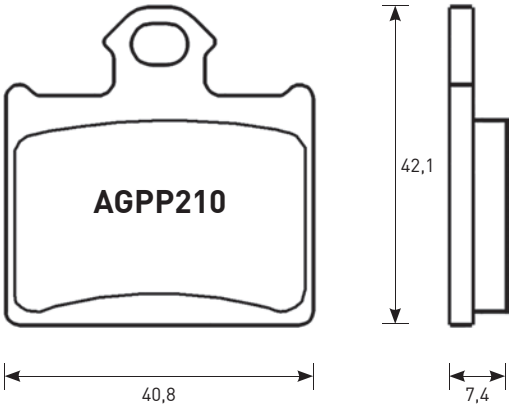

CROSS REFERENCE	
EBC	**FA602**
FERODO	**FDB2257**
CL	**1219**
SBS	**872**

EQUIVALENT OE #	
OEM KTM	**47013090300**

AGPP210						
MARCA Brand	**MODELLO** Model	**CC**	**DA** From	**A** To	**ANT.** Front	**POST.** Rear
HUSQVARNA	**CR 65**	**65**	**2012**			**X**
HUSQVARNA	**TC 85**	**85**	**2014**			**X**
KTM	**SX 85**	**85**	**2011**	**2011**		**X**
KTM	**SX 85**	**85**	**2012**			**X**
KTM	**FREERIDE R 250**	**250**	**2014**			**X**
KTM	**FREERIDE 350**	**350**	**2012**			**X**
KTM	**E-SM FREERIDE**		**2015**			**X**
KTM	**E-SX FREERIDE**		**2015**			**X**
KTM	**E-XC FREERIDE**		**2015**			**X**
KTM	**FREERIDE ELECTRIC**		**2012**			**X**

ACCOSSATO

PASTIGLIE BRAKE PADS

APPLICAZIONI PER CODICE PASTIGLIA / applications for pads code

MESCOLA SINTERIZZATA sintered compound
ST

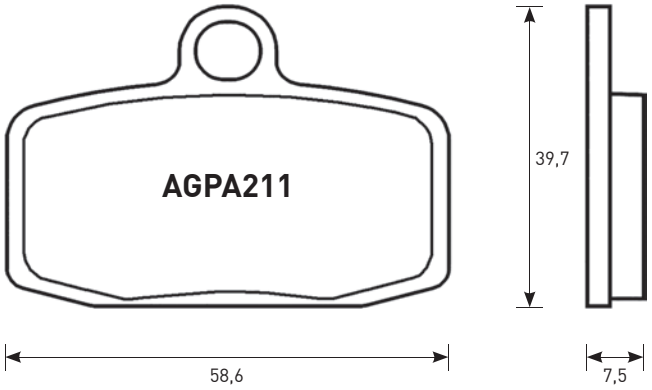

CROSS REFERENCE	
EBC	FA612
FERODO	FDB2262
CL	1228
SBS	885

EQUIVALENT OE #	
OEM KTM	47013030000

AGPA211						
MARCA Brand	MODELLO Model	CC	DA From	A To	ANT. Front	POST. Rear
HUSQVARNA	TC 85	85	2014		X	
KTM	SX 85	85	2012		X	
KTM	FREERIDE R 250	250	2014		X	
KTM	FREERIDE 350	350	2012		X	
KTM	E-SM FREERIDE		2015		X	
KTM	E-SX FREERIDE		2015		X	
KTM	E-XC FREERIDE		2015		X	
KTM	FREERIDE ELECTRIC		2012		X	

MESCOLA SINTERIZZATA sintered compound
ST

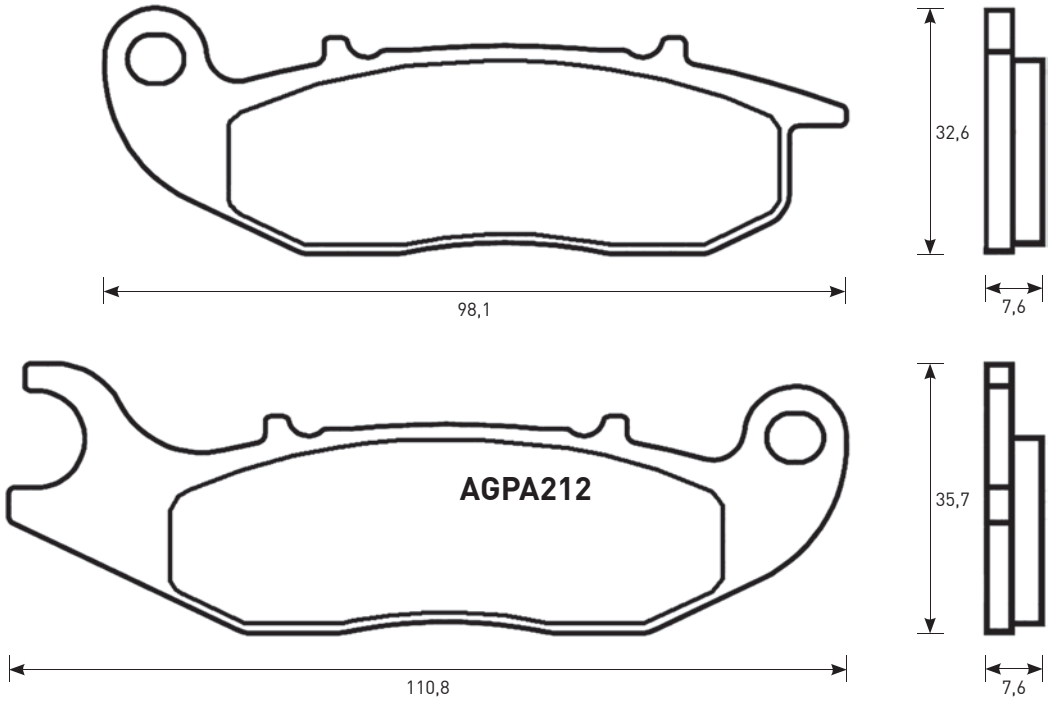

CROSS REFERENCE	
EBC	FA465
FERODO	FDB2242
CL	2958
SBS	859

EQUIVALENT OE #	
OEM Derbi	864342
OEM Derbi	865527

AGPA212						
MARCA Brand	MODELLO Model	CC	DA From	A To	ANT. Front	POST. Rear
AJP	PR3 125 Enduro	125	2013		X	
AJP	PR3 125 Enduro Pro	125	2013		X	
AJP	PR3 125 Extreme	125	2013		X	
AJP	PR3 125 Supermoto	125	2013		X	
AJP	PR4 125 Enduro	125	2013		X	
AJP	PR4 125 Enduro Pro	125	2013		X	

AGPA212						
MARCA Brand	MODELLO Model	CC	DA From	A To	ANT. Front	POST. Rear
AJP	PR4 125 Supermoto	125	2013		X	
AJP	PR4 125 Trail	125	2013		X	
AJP	PR5 250 Enduro	250	2010		X	
AJP	PR5 250 Extreme	250	2012		X	
AJP	PR5 250 Supermoto	250	2010		X	
DERBI	MULHAACEN 125	125	2008		X	
DERBI	TERRA 125	125	2008		X	
DERBI	TERRA ADVENTURE 125	125	2008		X	
HONDA	CRF L 250	250	2013		X	
HONDA	CRR M 250	250	2014		X	
SCORPA	T-RIDE 250	250	2008		X	

PASTIGLIE BRAKE PADS

APPLICAZIONI PER CODICE PASTIGLIA / applications for pads code

MESCOLA SINTERIZZATA sintered compound
ST

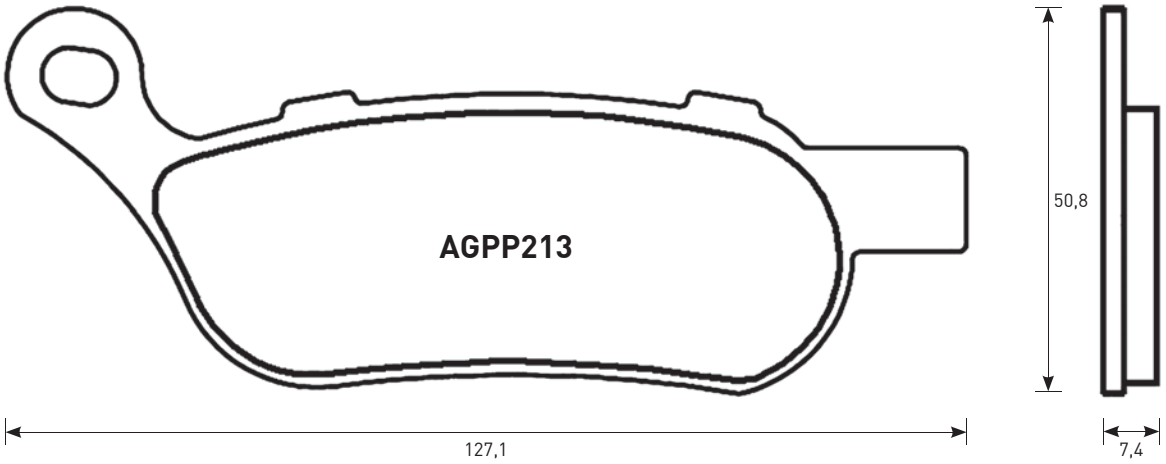

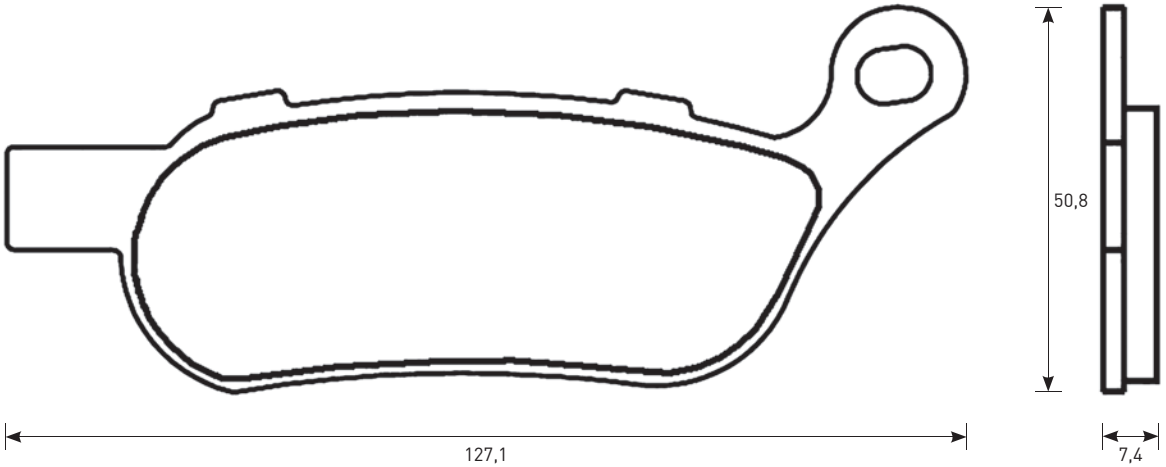

CROSS REFERENCE	
EBC	**FA458**
FERODO	**FDB2251**
CL	**1213**
SBS	**854**

EQUIVALENT OE #	
OEM Harley	**42298 08**

AGPP213						
MARCA Brand	**MODELLO** Model	**CC**	**DA** From	**A** To	**ANT.** Front	**POST.** Rear
HARLEY DAVIDSON	**FLSTC HERITAGE SOFTAIL CLASSIC 1584**	**1584**	**2008**			**X**
HARLEY DAVIDSON	**FLSTF FAT BOY 1584**	**1584**	**2008**			**X**
HARLEY DAVIDSON	**FLSTFB FAT BOY SPECIAL 1584**	**1584**	**2010**			**X**
HARLEY DAVIDSON	**FLSTN SOFTAIL DELUXE 1584**	**1584**	**2008**			**X**
HARLEY DAVIDSON	**FXCW ROCKER 1584**	**1584**	**2008**			**X**
HARLEY DAVIDSON	**FXCWC ROCKER C 1584**	**1584**	**2008**			**X**
HARLEY DAVIDSON	**FXD DYNA SUPER GLIDE 1584**	**1584**	**2008**			**X**
HARLEY DAVIDSON	**FXDB DYNA STREET BOB 1584**	**1584**	**2008**	**2013**		**X**
HARLEY DAVIDSON	**FXDC DYNA SUPER GLIDE CUSTOM 1584**	**1584**	**2008**			**X**
HARLEY DAVIDSON	**FXDF FAT BOB 1584**	**1584**	**2008**			**X**

AGPP213						
MARCA Brand	**MODELLO** Model	**CC**	**DA** From	**A** To	**ANT.** Front	**POST.** Rear
HARLEY DAVIDSON	**FXDL DYNA LOW RIDER 1584**	**1584**	**2008**			**X**
HARLEY DAVIDSON	**FXDWG DYNA WIDE GLIDE 1584**	**1584**	**2008**			**X**
HARLEY DAVIDSON	**FXST SOFTAIL STANDARD 1584**	**1584**	**2008**			**X**
HARLEY DAVIDSON	**FXSTB NIGHT TRAIN 1584**	**1584**	**2008**			**X**
HARLEY DAVIDSON	**FXSTC SOFTAIL CUSTOM 1584**	**1584**	**2008**			**X**
HARLEY DAVIDSON	**FLD SWITCHBACK 1690**	**1690**	**2012**			**X**
HARLEY DAVIDSON	**FLHRC ROAD KING CLASSIC 1690**	**1690**	**2011**			**X**
HARLEY DAVIDSON	**FLHTC ELECTRA GLIDE CLASSIC 1690**	**1690**	**2011**			**X**
HARLEY DAVIDSON	**FLHTK ULTRA ELECTRA GLIDE 1690**	**1690**	**2011**			**X**
HARLEY DAVIDSON	**FLS SOFTAIL SLIM 1690**	**1690**	**2012**			**X**
HARLEY DAVIDSON	**FLSTC HERITAGE SOFTAIL CLASSIC 1690**	**1690**	**2012**			**X**
HARLEY DAVIDSON	**FLSTF FAT BOY 1690**	**1690**	**2012**			**X**
HARLEY DAVIDSON	**FLSTF FAT BOY SPECIAL 1690**	**1690**	**2012**			**X**

ACCOSSATO

PASTIGLIE BRAKE PADS

APPLICAZIONI PER CODICE PASTIGLIA / applications for pads code

AGPP213						
MARCA Brand	MODELLO Model	CC	DA From	A To	ANT. Front	POST. Rear
HARLEY DAVIDSON	FLSTFB FAT BOY 1690	1690	2012			X
HARLEY DAVIDSON	FLSTN SOFTAIL DELUXE 1690	1690	2012			X
HARLEY DAVIDSON	FXDB DYNA STREET BOB 1690	1690	2014			X
HARLEY DAVIDSON	FXDBA STREET BOB 1690	1690	2013			X
HARLEY DAVIDSON	FXDBB STREET BOB 1690	1690	2014			X
HARLEY DAVIDSON	FXDBP STREET BOB 1690	1690	2013			X
HARLEY DAVIDSON	FXDC DYNA SUPER GLIDE CUSTOM 1690	1690	2014			X

AGPP213						
MARCA Brand	MODELLO Model	CC	DA From	A To	ANT. Front	POST. Rear
HARLEY DAVIDSON	FXDF FAT BOB 1690	1690	2012			X
HARLEY DAVIDSON	FXDF WIDE GLIDE 1690	1690	2012			X
HARLEY DAVIDSON	FXDL LOW RIDER 1690	1690	2014			X
HARLEY DAVIDSON	FXS BLACKLINE 1690	1690	2013			X
HARLEY DAVIDSON	FXSB BREAKOUT 1690	1690	2014			X
HARLEY DAVIDSON	FLSTNSE CVO SOFTAIL DELUXE 1802	1802	2014			X
HARLEY DAVIDSON	FXSBSE CVO BREAKOUT 1802	1802	2013			X

MESCOLA SINTERIZZATA sintered compound
ST

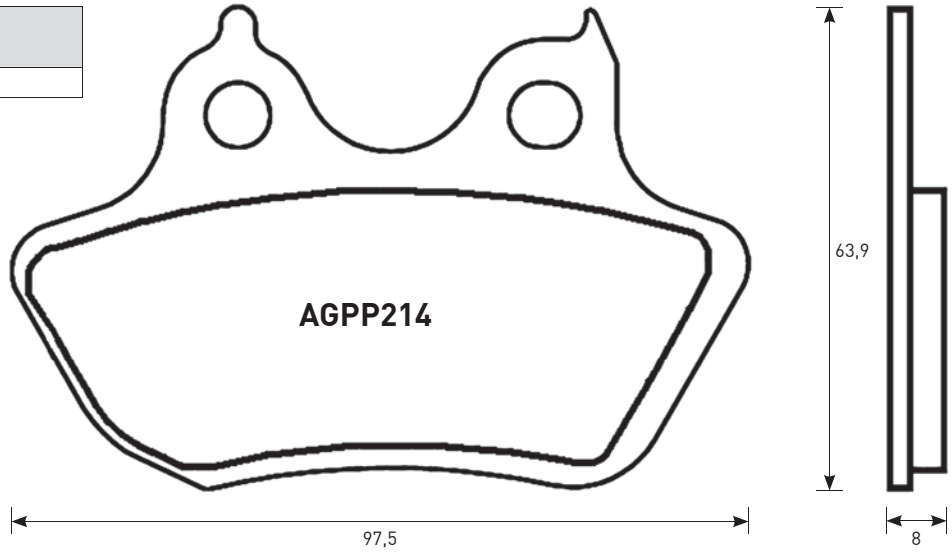

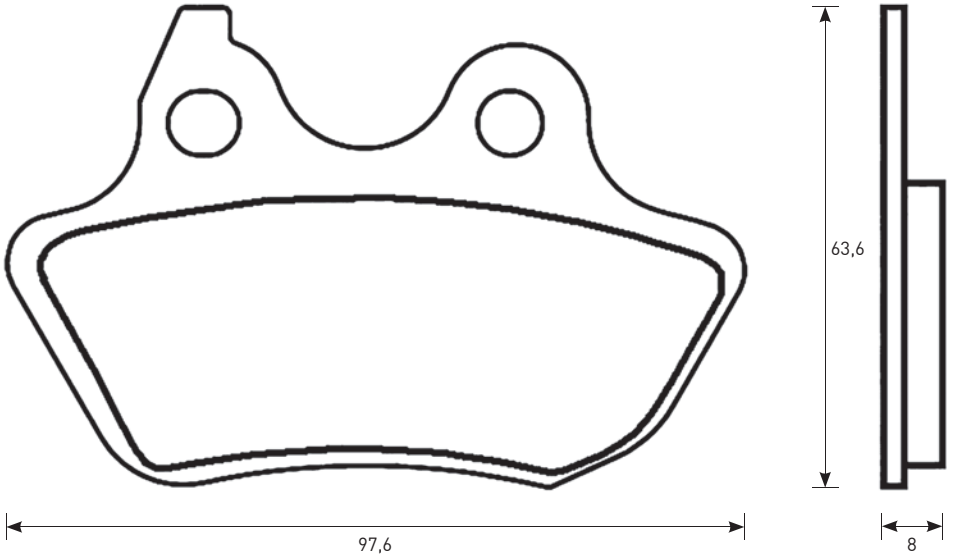

CROSS REFERENCE	
EBC	FA434
FERODO	FDB2202
CL	1211
SBS	846

EQUIVALENT OE #	
OEM Harley	44082 00C
OEM Harley	46721-06

AGPP214						
MARCA Brand	MODELLO Model	CC	DA From	A To	ANT. Front	POST. Rear
HARLEY DAVIDSON	FLSTI HERITAGE SOFTAIL 1450	1450	2006			X

PASTIGLIE BRAKE PADS

APPLICAZIONI PER CODICE PASTIGLIA / applications for pads code

AGPP214						
MARCA Brand	**MODELLO** Model	**CC**	**DA** From	**A** To	**ANT.** Front	**POST.** Rear
HARLEY DAVIDSON	FXDI 35TH ANNIVERSARY SUPER GLIDE 1450	1450	2006			X
HARLEY DAVIDSON	FXST/I SOFTAIL STANDARD 1450	1450	2006			X
HARLEY DAVIDSON	FXSTB/I NIGHT TRAIN 1450	1450	2006			X
HARLEY DAVIDSON	FXSTD/I SOFTAIL DEUCE 1450	1450	2006			X
HARLEY DAVIDSON	FXSTS/I SOFTAIL 1450	1450	2006			X
HARLEY DAVIDSON	FLSTC HERITAGE SOFTAIL CLASSIC 1584	1584	2006			X
HARLEY DAVIDSON	FLSTF FAT BOY 1584	1584	2007			X

AGPP214						
MARCA Brand	**MODELLO** Model	**CC**	**DA** From	**A** To	**ANT.** Front	**POST.** Rear
HARLEY DAVIDSON	FLSTN SOFTAIL DELUXE 1584	1584	2007			X
HARLEY DAVIDSON	FLSTSC/I SOFTAIL 1584	1584	2007			X
HARLEY DAVIDSON	FXST SOFTAIL STANDARD 1584	1584	2007			X
HARLEY DAVIDSON	FXSTB NIGHT TRAIN 1584	1584	2007			X
HARLEY DAVIDSON	FXSTC SOFTAIL CUSTOM 1584	1584	2007			X
HARLEY DAVIDSON	FXSTD SOFTAIL DEUCE 1584	1584	2007			X

MESCOLA SINTERIZZATA sintered compound
ST

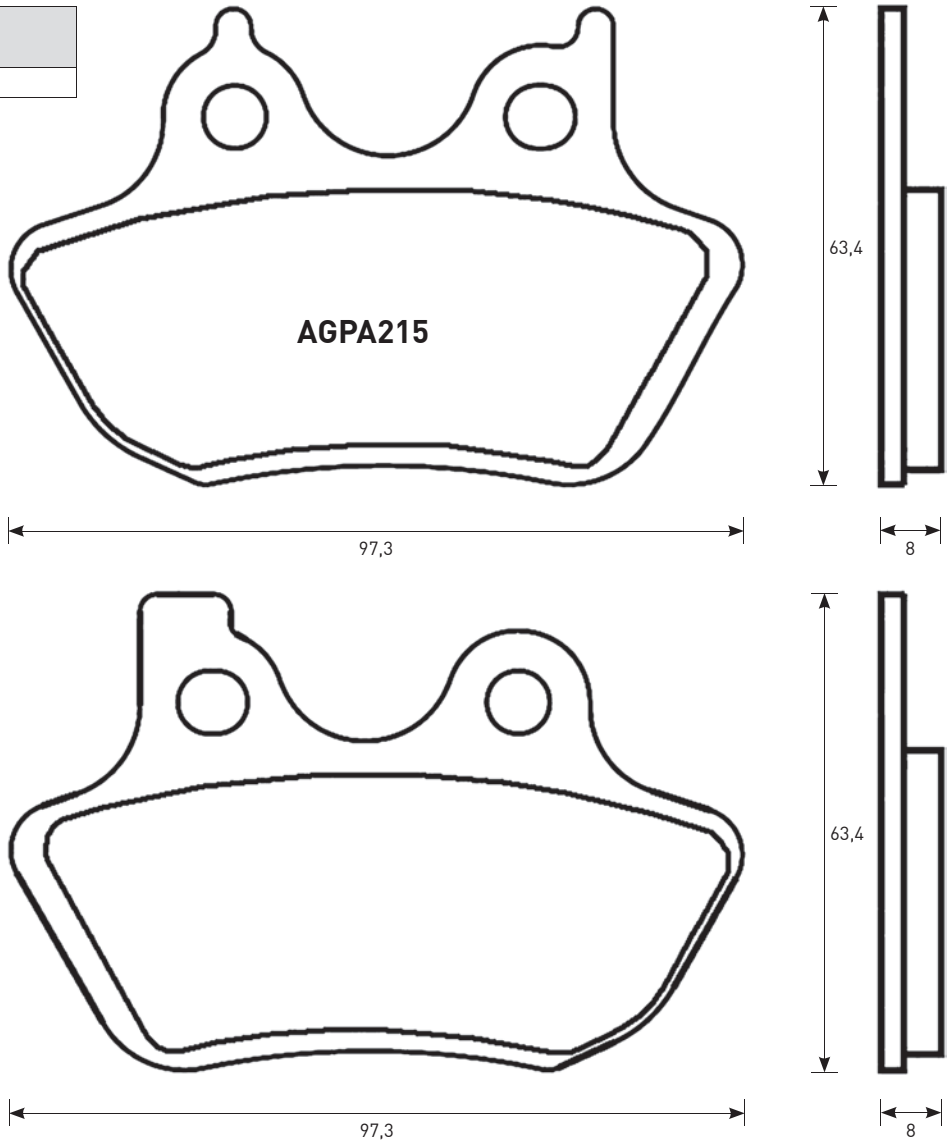

CROSS REFERENCE	
EBC	FA400
BREMBO	07HD1210
FERODO	FDB2097
CL	1211/2858
SBS	826/750

EQUIVALENT OE #	
OEM Harley	44082 00

AGPA215						
MARCA Brand	**MODELLO** Model	**CC**	**DA** From	**A** To	**ANT.** Front	**POST.** Rear
HARLEY DAVIDSON	XL R SPORTSTER 883	883	2000	2003	X	X
HARLEY DAVIDSON	XL SPORTSTER CUSTOM 883	883	2000	2003	X	X

ACCOSSATO

PASTIGLIE BRAKE PADS

APPLICAZIONI PER CODICE PASTIGLIA / applications for pads code

AGPA215						
MARCA Brand	MODELLO Model	CC	DA From	A To	ANT. Front	POST. Rear
HARLEY DAVIDSON	XLH SPORTSTER 883	883	2000	2003	X	X
HARLEY DAVIDSON	XLH SPORTSTER HUGGER 883	883	2000	2003	X	X
HARLEY DAVIDSON	VRSCA V-ROD 1130	1130	2002	2005	X	X
HARLEY DAVIDSON	VRSCB V-ROD 1130	1130	2004		X	X
HARLEY DAVIDSON	XL SPORTSTER CUSTOM 1200	1200	2000	2003	X	X
HARLEY DAVIDSON	XL SPORTSTER SPORT 1200	1200	2000	2003	X	X
HARLEY DAVIDSON	XLH SPORTSTER 1200	1200	2000	2003	X	X
HARLEY DAVIDSON	FLHR/I ROAD KING 1450	1450	2000	2006	X	X
HARLEY DAVIDSON	FLHRCI ROAD KING CLASSIC 1450	1450	2000	2006	X	X
HARLEY DAVIDSON	FLHRS/I ROAD KING CUSTOM 1450	1450	2004	2006	X	X
HARLEY DAVIDSON	FLHT/I ELECTRA GLIDE STANDARD 1450	1450	2000	2006	X	X
HARLEY DAVIDSON	FLHTC/I ELECTRA GLIDE STANDARD 1450	1450	2000	2006	X	X
HARLEY DAVIDSON	FLHTCUI ULTRA CLASSIC ELECTRA GLIDE 1450	1450	2000	2006	X	X
HARLEY DAVIDSON	FLHXI STREET GLIDE 1450	1450	2006		X	X
HARLEY DAVIDSON	FLSTFI FAT BOY 1450	1450	2006		X	X
HARLEY DAVIDSON	FLSTC SOFTAIL 1450	1450	2006	2007	X	X
HARLEY DAVIDSON	FLSTC/I HERITAGE SOFTAIL CLASSIC 1450	1450	2000	2004	X	X
HARLEY DAVIDSON	FLSTCI SOFTAIL 1450	1450	2006		X	X
HARLEY DAVIDSON	FLSTF FAT BOY 1450	1450	2006	2007	X	X
HARLEY DAVIDSON	FLSTF/I FAT BOY 1450	1450	2000	2004	X	X
HARLEY DAVIDSON	FLSTI HERITAGE SOFTAIL 1450	1450	2006		X	
HARLEY DAVIDSON	FLSTN/I SOFTAIL DELUXE 1450	1450	2006		X	X
HARLEY DAVIDSON	FLSTS/I HERITAGE SPRINGER 1450	1450	2000	2003		X
HARLEY DAVIDSON	FLSTSC/I SPRINGER SOFTAIL CLASSIC 1450	1450	2006		X	X
HARLEY DAVIDSON	FLTR/I ROAD GLIDE CLASSIC 1450	1450	2000	2006	X	X
HARLEY DAVIDSON	FXD DYNA SUPER GLIDE 1450	1450	2000	2003	X	X
HARLEY DAVIDSON	FXDBI DYNA STREET BOB 1450	1450	2006		X	X
HARLEY DAVIDSON	FXDC/I DYNA SUPER GLIDE CUSTOM 1450	1450	2005	2006	X	X
HARLEY DAVIDSON	FXDI 35TH ANNIVERSARY SUPER GLIDE 1450	1450	2006		X	
HARLEY DAVIDSON	FXDI DYNA SUPER GLIDE 1450	1450	2004	2006	X	X
HARLEY DAVIDSON	FXDL DYNA LOW RIDER 1450	1450	2000	2003	X	X

AGPA215						
MARCA Brand	MODELLO Model	CC	DA From	A To	ANT. Front	POST. Rear
HARLEY DAVIDSON	FXDLI DYNA LOW RIDER 1450	1450	2004	2006	X	X
HARLEY DAVIDSON	FXDS DYNA CONVERTIBLE 1450	1450	2000	2002	X	X
HARLEY DAVIDSON	FXDWG DYNA WIDE GLIDE 1450	1450	2000	2003	X	X
HARLEY DAVIDSON	FXDWGI DYNA WIDE GLIDE 1450	1450	2004	2006	X	X
HARLEY DAVIDSON	FXDX DYNA SUPER GLIDE SPORT 1450	1450	2000	2003	X	X
HARLEY DAVIDSON	FXDXI DYNA SUPER GLIDE SPORT 1450	1450	2004	2006	X	X
HARLEY DAVIDSON	FXDXT DYNA SUPER GLIDE T-SPORT 1450	1450	2000	2003	X	X
HARLEY DAVIDSON	FXST/I SOFTAIL STANDARD 1450	1450	2000	2006	X	X
HARLEY DAVIDSON	FXSTB/I NIGHT TRAIN 1450	1450	2000	2006	X	X
HARLEY DAVIDSON	FXSTD/I SOFTAIL DEUCE 1450	1450	2000	2006	X	X
HARLEY DAVIDSON	FXSTS/I SOFTAIL 1450	1450	2005			X
HARLEY DAVIDSON	FXSTS/I SPRINGER SOFTAIL 1450	1450	2000	2004		X
HARLEY DAVIDSON	FLHR ROAD KING 1584	1584	2007		X	X
HARLEY DAVIDSON	FLHRC ROAD KING CLASSIC 1584	1584	2007		X	X
HARLEY DAVIDSON	FLHRS ROAD KING CUSTOM 1584	1584	2007		X	X
HARLEY DAVIDSON	FLHT ELECTRA GLIDE STANDARD 1584	1584	2007		X	X
HARLEY DAVIDSON	FLHTC ELECTRA GLIDE CLASSIC 1584	1584	2007		X	X
HARLEY DAVIDSON	FLHTCUI ULTRA CLASSIC ELECTRA GLIDE 1584	1584	2007	2010	X	X
HARLEY DAVIDSON	FLHXI STREET GLIDE 1584	1584	2007		X	X
HARLEY DAVIDSON	FLSTC HERITAGE SOFTAIL CLASSIC 1584	1584	2007		X	
HARLEY DAVIDSON	FLSTF FAT BOY 1584	1584	2007		X	
HARLEY DAVIDSON	FLSTN SOFTAIL DELUXE 1584	1584	2007		X	
HARLEY DAVIDSON	FXD DYNA SUPER GLIDE 1584	1584	2007		X	X
HARLEY DAVIDSON	FXDB DYNA STREET BOB 1584	1584	2007		X	X
HARLEY DAVIDSON	FXDC DYNA SUPER GLIDE CUSTOM 1584	1584	2007		X	X
HARLEY DAVIDSON	FXDWG DYNA WIDE GLIDE 1584	1584	2007		X	X
HARLEY DAVIDSON	FXKL DYNA LOW RIDER 1584	1584	2007		X	X
HARLEY DAVIDSON	FXST SOFTAIL STANDARD 1584	1584	2007		X	
HARLEY DAVIDSON	FXSTB NIGHT TRAIN 1584	1584	2007		X	
HARLEY DAVIDSON	FXSTC SOFTAIL CUSTOM 1584	1584	2007		X	
HARLEY DAVIDSON	FXSTD SOFTAIL DEUCE 1584	1584	2007		X	

PASTIGLIE BRAKE PADS

APPLICAZIONI PER CODICE PASTIGLIA / applications for pads code

MESCOLA SINTERIZZATA sintered compound
ST

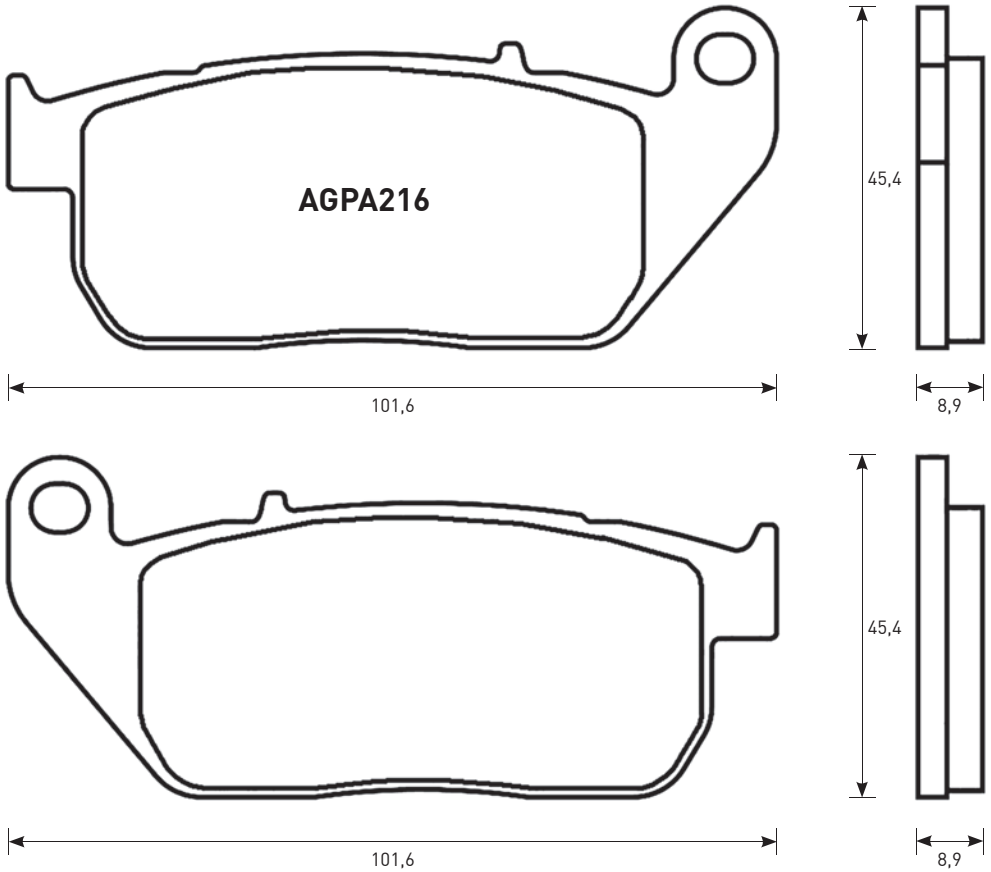

CROSS REFERENCE	
EBC	**FA381**
FERODO	**FDB2179**
CL	**1149**
SBS	**807**

EQUIVALENT OE #	
OEM Harley	**42831 04A**
OEM Harley	**42831 04**

AGPA216						
MARCA Brand	**MODELLO** Model	**CC**	**DA** From	**A** To	**ANT.** Front	**POST.** Rear
HARLEY DAVIDSON	**XL C SPORTSTER CUSTOM 883**	**883**	**2004**	**2013**	**X**	
HARLEY DAVIDSON	**XL L SPORTSTER LOW 883**	**883**	**2006**	**2013**	**X**	
HARLEY DAVIDSON	**XL L SUPER LOW 883**	**883**	**2011**	**2013**	**X**	
HARLEY DAVIDSON	**XL N IRON 883**	**883**	**2013**		**X**	
HARLEY DAVIDSON	**XL R ROADSTER 883**	**883**	**2010**	**2013**	**X**	

AGPA216						
MARCA Brand	**MODELLO** Model	**CC**	**DA** From	**A** To	**ANT.** Front	**POST.** Rear
HARLEY DAVIDSON	**XL SPORTSTER 883**	**883**	**2004**	**2013**	**X**	
HARLEY DAVIDSON	**XL SPORTSTER R 883**	**883**	**2005**	**2013**	**X**	
HARLEY DAVIDSON	**N NIGHTSTER 1200**	**1200**	**2007**		**X**	
HARLEY DAVIDSON	**X FORTY-EIGHT 1200**	**1200**	**2011**	**2013**	**X**	
HARLEY DAVIDSON	**XL C SPORTSTER CUSTOM 1200**	**1200**	**2004**		**X**	
HARLEY DAVIDSON	**XL L SPORTSTER LOW 1200**	**1200**	**2007**		**X**	
HARLEY DAVIDSON	**XL R SPORTSTER ROADSTER 1200**	**1200**	**2004**		**X**	
HARLEY DAVIDSON	**XL V SEVENTY-TWO 1200**	**1200**	**2011**	**2013**	**X**	

ACCOSSATO

PASTIGLIE BRAKE PADS

APPLICAZIONI PER CODICE PASTIGLIA / applications for pads code

MESCOLA SINTERIZZATA sintered compound
ST

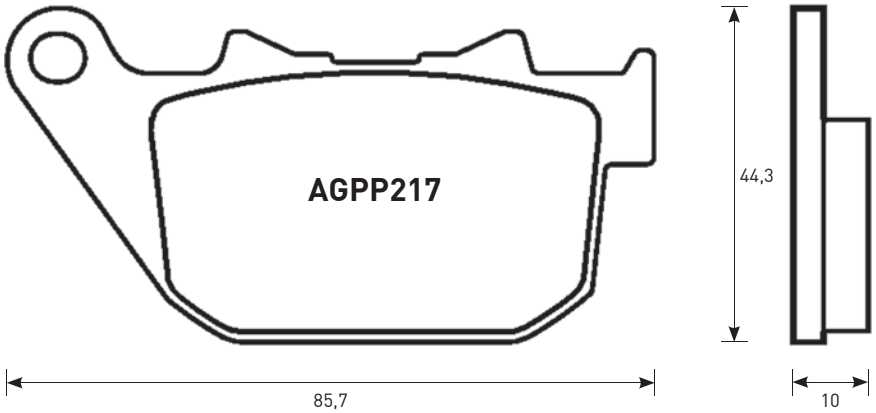

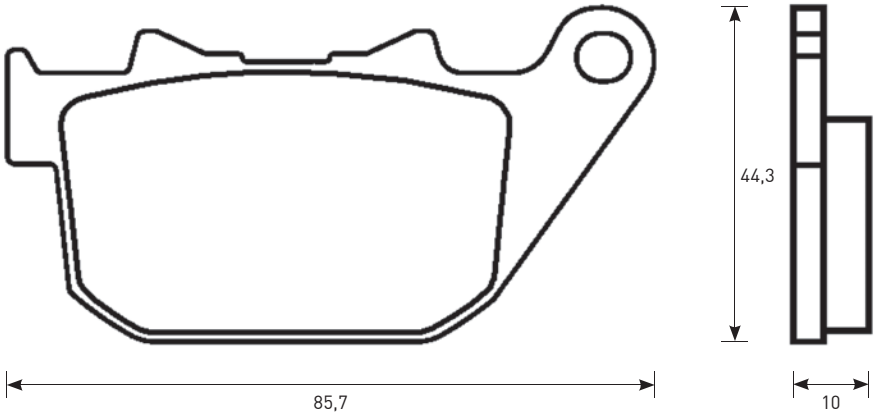

CROSS REFERENCE	
EBC	FA387
FERODO	FDB2180
CL	1150
SBS	808

EQUIVALENT OE #	
OEM Harley	42029 07
OEM Harley	42836 04

AGPP217						
MARCA Brand	MODELLO Model	CC	DA From	A To	ANT. Front	POST. Rear
HARLEY DAVIDSON	XL C SPORTSTER CUSTOM 883	883	2004	2013		X
HARLEY DAVIDSON	XL L SPORTSTER LOW 883	883	2006	2013		X
HARLEY DAVIDSON	XL L SUPER LOW 883	883	2011	2013		X
HARLEY DAVIDSON	XL N IRON 883	883	2013			X
HARLEY DAVIDSON	XL R ROADSTER 883	883	2010	2013		X
HARLEY DAVIDSON	XL SPORTSTER 883	883	2004	2013		X

AGPP217						
MARCA Brand	MODELLO Model	CC	DA From	A To	ANT. Front	POST. Rear
HARLEY DAVIDSON	XL SPORTSTER R 883	883	2005	2013		X
HARLEY DAVIDSON	N NIGHTSTER 1200	1200	2007			X
HARLEY DAVIDSON	X FORTY-EIGHT 1200	1200	2011	2013		X
HARLEY DAVIDSON	XL C SPORTSTER CUSTOM 1200	1200	2004			X
HARLEY DAVIDSON	XL L SPORTSTER LOW 1200	1200	2007			X
HARLEY DAVIDSON	XL R SPORTSTER ROADSTER 1200	1200	2004			X
HARLEY DAVIDSON	XL V SEVENTY-TWO 1200	1200	2011	2013		X
HARLEY DAVIDSON	XR 1200	1200	2008			X
HARLEY DAVIDSON	XR X 1200	1200	2010			X

PASTIGLIE BRAKE PADS

APPLICAZIONI PER CODICE PASTIGLIA / applications for pads code

MESCOLA SINTERIZZATA sintered compound
ST

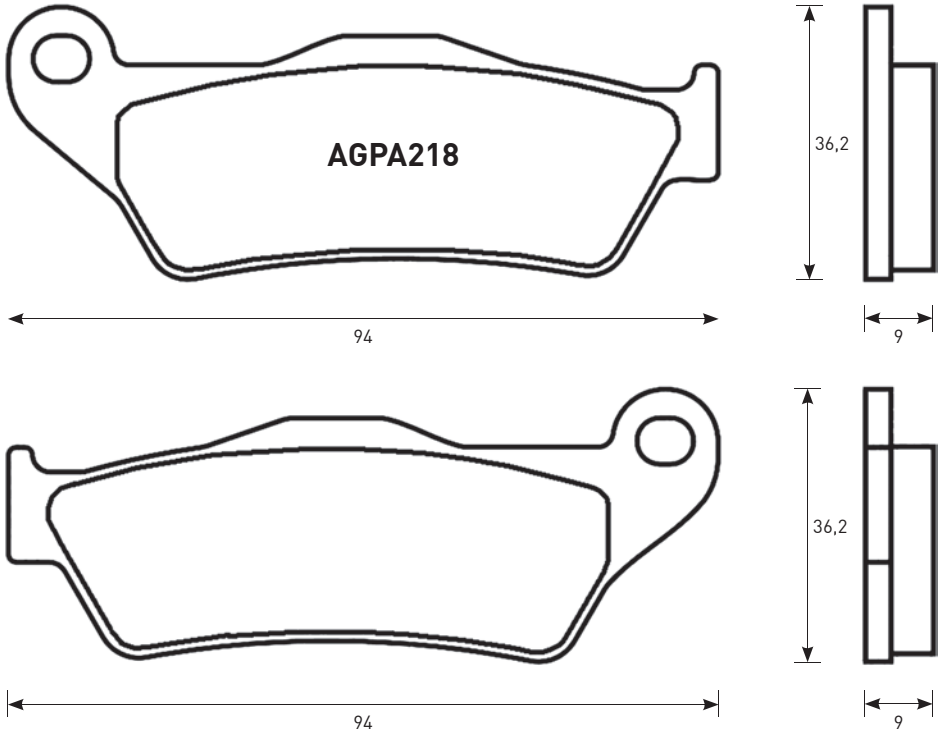

CROSS REFERENCE	
EBC	**FA643**
CL	**2352**
SBS	**924**

EQUIVALENT OE #	
	41300072

AGPA218						
MARCA Brand	**MODELLO** Model	**CC**	**DA** From	**A** To	**ANT.** Front	**POST.** Rear
HARLEY DAVIDSON	**XG STREET 500**	**500**	**2014**		**X**	**X**
HARLEY DAVIDSON	**XG STREET 750**	**750**	**2015**		**X**	**X**

ACCOSSATO

PASTIGLIE BRAKE PADS

APPLICAZIONI PER CODICE PASTIGLIA / applications for pads code

MESCOLA SINTERIZZATA sintered compound
ST

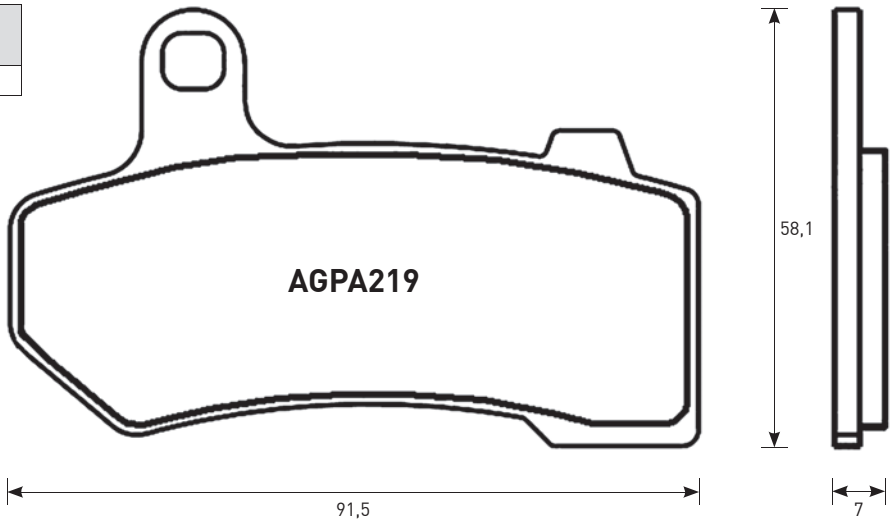

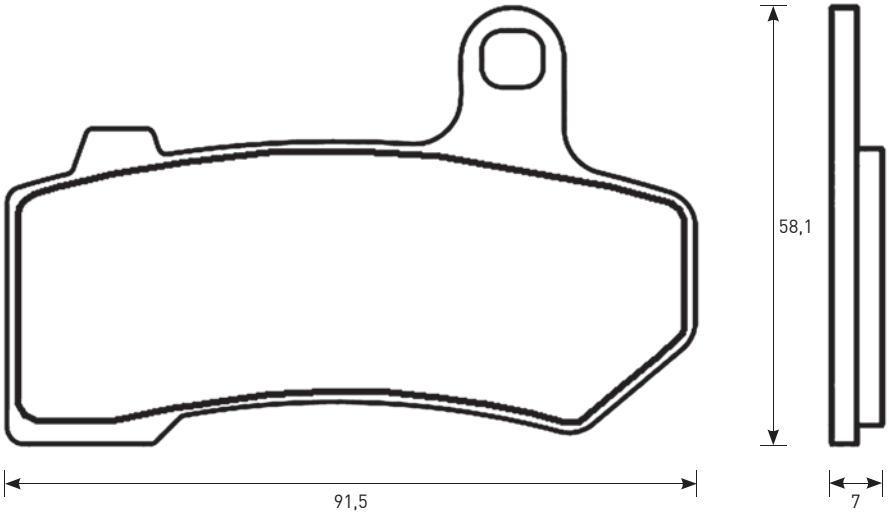

CROSS REFERENCE	
EBC	FA409
FERODO	FDB2210
CL	1172
SBS	830

EQUIVALENT OE #	
OEM Harley	42850 06A
OEM Harley	42897 06
OEM Harley	42850 06B
OEM Harley	42850 06
OEM Harley	41854 08
OEM Harley	41852 08
OEM Harley	42897 08
OEM Harley	428490 6A

AGPA219						
MARCA Brand	MODELLO Model	CC	DA From	A To	ANT. Front	POST. Rear
HARLEY DAVIDSON	VRSCA V-ROD 1130	1130	2006		X	X
HARLEY DAVIDSON	VRSCD NIGHT ROD 1130	1130	2006		X	X
HARLEY DAVIDSON	VRSCR STREET ROD 1130	1130	2006		X	X
HARLEY DAVIDSON	VRSCAW V-ROD 1250	1250	2008		X	X
HARLEY DAVIDSON	VRSCDX NIGHT ROD SPECIAL 1250	1250	2008		X	X
HARLEY DAVIDSON	VRSCF MUSCLE 1250	1250	2009		X	X
HARLEY DAVIDSON	VRSCX V-ROD 1250	1250	2008		X	X

AGPA219						
MARCA Brand	MODELLO Model	CC	DA From	A To	ANT. Front	POST. Rear
HARLEY DAVIDSON	FLHR ROAD KING 1584	1584	2008	2010	X	X
HARLEY DAVIDSON	FLHRC ROAD KING CLASSIC 1584	1584	2008		X	X
HARLEY DAVIDSON	FLHT ELECTRA GLIDE STANDARD 1584	1584	2008		X	X
HARLEY DAVIDSON	FLHTC ELECTRA GLIDE CLASSIC 1584	1584	2008		X	X
HARLEY DAVIDSON	FLHTCI ULTRA ELECTRA GLIDE CLASSIC 1584	1584	2008		X	X
HARLEY DAVIDSON	FLHTK ELECTRA GLIDE ULTRA LTD 1584	1584	2010		X	X
HARLEY DAVIDSON	FLHX STREET GLIDE 1584	1584	2008		X	X
HARLEY DAVIDSON	FLTR ROAD GLIDE 1584	1584	2008		X	X
HARLEY DAVIDSON	FLTRU ROAD GLIDE ULTRA 1584	1584	2011		X	X
HARLEY DAVIDSON	FLTRX ROAD GLIDE CUSTOM 1584	1584	2010		X	X
HARLEY DAVIDSON	FLHR ROAD KING 1690	1690	2011		X	X
HARLEY DAVIDSON	FLHTCU ULTRA CLASSIC ELECTRA GLIDE 1690	1690	2011		X	X

PASTIGLIE BRAKE PADS

APPLICAZIONI PER CODICE PASTIGLIA / applications for pads code

AGPA219						
MARCA Brand	**MODELLO** Model	**CC**	**DA** From	**A** To	**ANT.** Front	**POST.** Rear
HARLEY DAVIDSON	FLHTCUL ELECTRA GLIDE ULTRA CLASSIC LOW 1690	1690	2015		X	X
HARLEY DAVIDSON	FLHTCUTG TRI GLIDE ULTRA CLASSIC TRIKE 1690	1690	2009	2013	X	
HARLEY DAVIDSON	FLHTK ULTRA CLASSIC GLIDE 1690	1690	2010		X	X
HARLEY DAVIDSON	FLHTKL ULTRA LIMITED LOW 1690	1690	2015		X	X
HARLEY DAVIDSON	FLHX STREET GLIDE 1690	1690	2011		X	X
HARLEY DAVIDSON	FLHXS STREET GLIDE SPECIAL 1690	1690	2014		X	X
HARLEY DAVIDSON	FLHXXX STREET GLIDE TRIKE 1690	1690	2010		X	

AGPA219						
MARCA Brand	**MODELLO** Model	**CC**	**DA** From	**A** To	**ANT.** Front	**POST.** Rear
HARLEY DAVIDSON	FLTRX ROAD GLIDE CUSTOM 1690	1690	2015		X	X
HARLEY DAVIDSON	FLTRXS ROAD GLIDE SPECIAL 1690	1690	2015		X	X
HARLEY DAVIDSON	FLHRSE CVO ROAD KING 1802	1802	2014		X	X
HARLEY DAVIDSON	FLHTKSE CVO LIMITED 1802	1802	2014		X	X
HARLEY DAVIDSON	FLHXSECVO STREET GLIDE 1802	1802	2010		X	X
HARLEY DAVIDSON	FLTRUSE CVO ROAD GLIDE ULTRA 1802	1802	2011		X	X

MESCOLA SINTERIZZATA sintered compound
ST

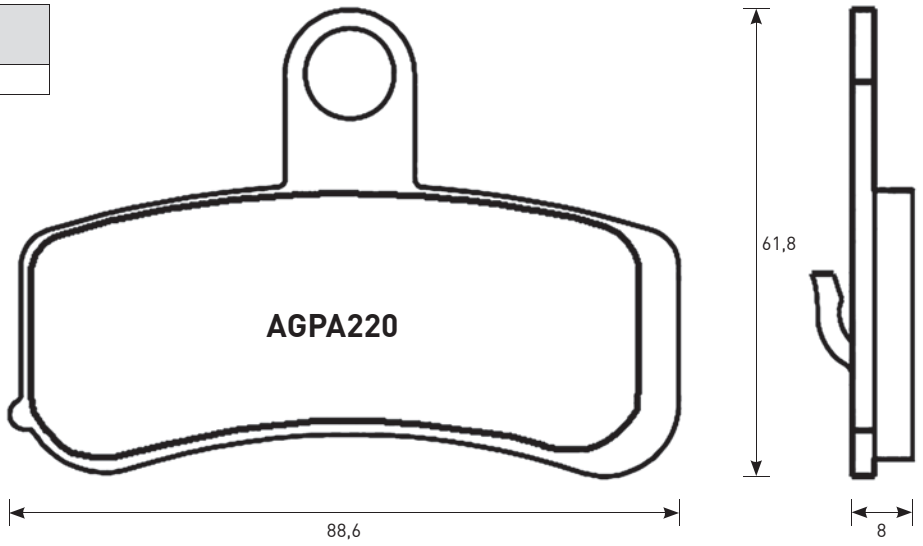

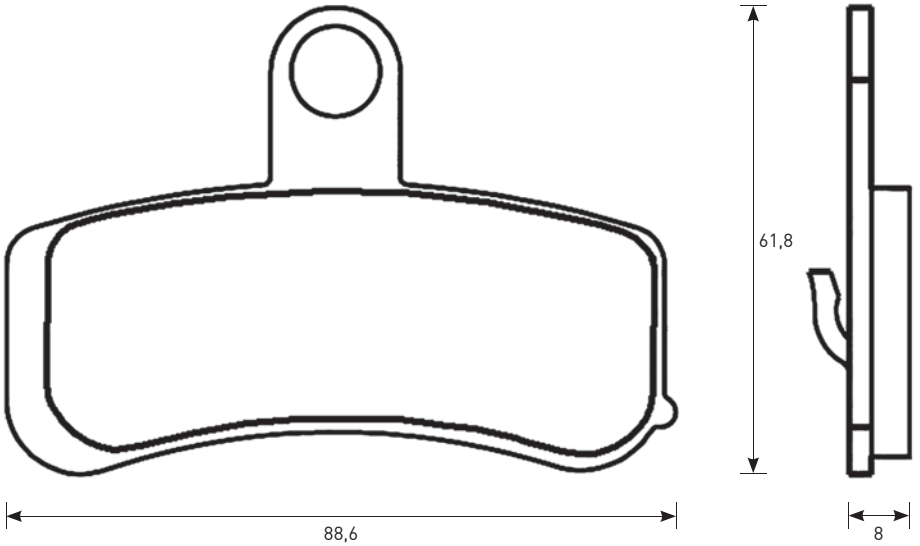

CROSS REFERENCE	
EBC	FA457
FERODO	FDB2250
CL	1212
SBS	853

EQUIVALENT OE #	
OEM Harley	44082 08

AGPA220						
MARCA Brand	**MODELLO** Model	**CC**	**DA** From	**A** To	**ANT.** Front	**POST.** Rear
HARLEY DAVIDSON	FLSTC HERITAGE SOFTAIL CLASSIC 1584	1584	2008		X	

ACCOSSATO

PASTIGLIE BRAKE PADS

APPLICAZIONI PER CODICE PASTIGLIA / applications for pads code

AGPA220						
MARCA Brand	MODELLO Model	CC	DA From	A To	ANT. Front	POST. Rear
HARLEY DAVIDSON	FLSTF FAT BOY 1584	1584	2008		X	
HARLEY DAVIDSON	FLSTFB FAT BOY SPECIAL 1584	1584	2010		X	
HARLEY DAVIDSON	FLSTN SOFTAIL DELUXE 1584	1584	2008		X	
HARLEY DAVIDSON	FXCW ROCKER 1584	1584	2008		X	
HARLEY DAVIDSON	FXCWC ROCKER C 1584	1584	2008		X	
HARLEY DAVIDSON	FXD DYNA SUPER GLIDE 1584	1584	2008		X	
HARLEY DAVIDSON	FXDB DYNA STREET BOB 1584	1584	2008	2013	X	
HARLEY DAVIDSON	FXDC DYNA SUPER GLIDE CUSTOM 1584	1584	2008		X	
HARLEY DAVIDSON	FXDF FAT BOB 1584	1584	2008		X	
HARLEY DAVIDSON	FXDL DYNA LOW RIDER 1584	1584	2008		X	
HARLEY DAVIDSON	FXDWG DYNA WIDE GLIDE 1584	1584	2008		X	
HARLEY DAVIDSON	FXST SOFTAIL STANDARD 1584	1584	2008		X	
HARLEY DAVIDSON	FXSTB NIGHT TRAIN 1584	1584	2008		X	
HARLEY DAVIDSON	FXSTC SOFTAIL CUSTOM 1584	1584	2008		X	
HARLEY DAVIDSON	FLD SWITCHBACK 1690	1690	2012		X	
HARLEY DAVIDSON	FLHRC ROAD KING CLASSIC 1690	1690	2011		X	
HARLEY DAVIDSON	FLHTC ELECTRA GLIDE CLASSIC 1690	1690	2011		X	
HARLEY DAVIDSON	FLHTK ULTRA ELECTRA GLIDE 1690	1690	2011		X	

AGPA220						
MARCA Brand	MODELLO Model	CC	DA From	A To	ANT. Front	POST. Rear
HARLEY DAVIDSON	FLS SOFTAIL SLIM 1690	1690	2012		X	
HARLEY DAVIDSON	FLSTC HERITAGE SOFTAIL CLASSIC 1690	1690	2012		X	
HARLEY DAVIDSON	FLSTF FAT BOY 1690	1690	2012		X	
HARLEY DAVIDSON	FLSTF FAT BOY SPECIAL 1690	1690	2012		X	
HARLEY DAVIDSON	FLSTFB FAT BOY 1690	1690	2012		X	
HARLEY DAVIDSON	FLSTN SOFTAIL DELUXE 1690	1690	2012		X	
HARLEY DAVIDSON	FXDB DYNA STREET BOB 1690	1690	2014		X	
HARLEY DAVIDSON	FXDBA STREET BOB 1690	1690	2013		X	
HARLEY DAVIDSON	FXDBB STREET BOB 1690	1690	2014		X	
HARLEY DAVIDSON	FXDBP STREET BOB 1690	1690	2013		X	
HARLEY DAVIDSON	FXDC DYNA SUPER GLIDE CUSTOM 1690	1690	2014		X	
HARLEY DAVIDSON	FXDF FAT BOB 1690	1690	2012		X	
HARLEY DAVIDSON	FXDF WIDE GLIDE 1690	1690	2012		X	
HARLEY DAVIDSON	FXDL LOW RIDER 1690	1690	2014		X	
HARLEY DAVIDSON	FXS BLACKLINE 1690	1690	2013		X	
HARLEY DAVIDSON	FXSB BREAKOUT 1690	1690	2014		X	
HARLEY DAVIDSON	FLSTNSE CVO SOFTAIL DELUXE 1802	1802	2014		X	
HARLEY DAVIDSON	FXSBSE CVO BREAKOUT 1802	1802	2013		X	

PASTIGLIE BRAKE PADS

APPLICAZIONI PER CODICE PASTIGLIA / applications for pads code

MESCOLA ORGANICA organic compound
OR

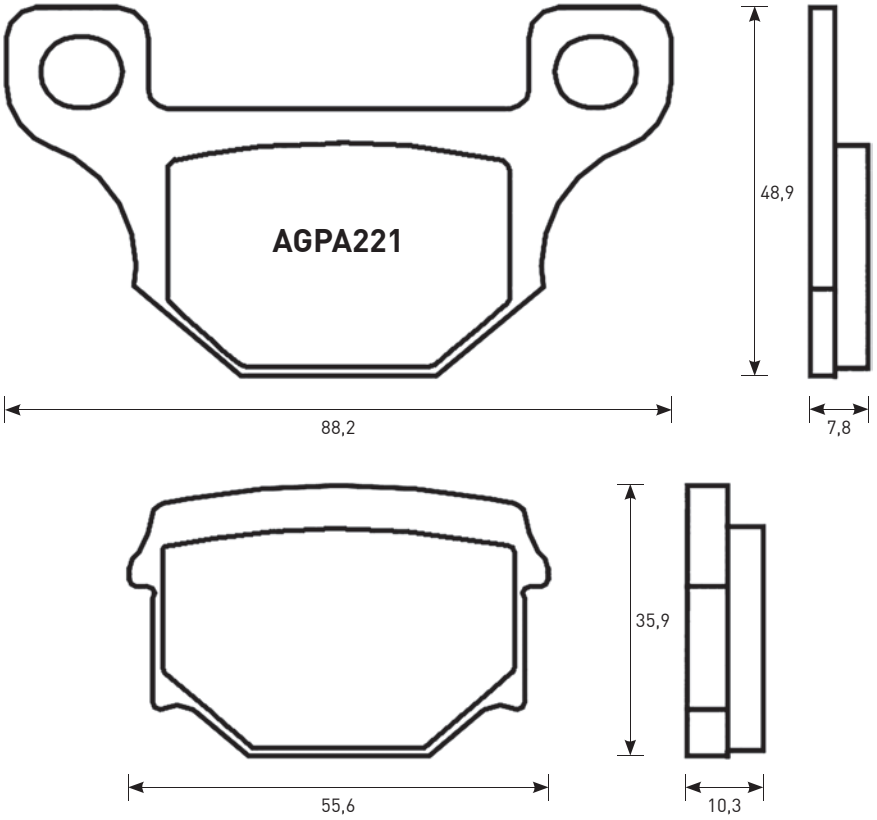

CROSS REFERENCE	
EBC	**FA093**
NEWFREN	**.FD.0077**
FERODO	**FDB384**
SBS	**203/585**

EQUIVALENT OE #	
OEM Suzuki	**59300 29820**

AGPA221						
MARCA Brand	**MODELLO** Model	**CC**	**DA** From	**A** To	**ANT.** Front	**POST.** Rear
DERBI	**125 Senda DRD SM**	**125**	**2010**		**X**	
DERBI	**125 Mulhacen**	**125**	**2008**		**X**	
DERBI	**125 Terra**	**125**	**2008**		**X**	
DERBI	**125 Terra Adventure**	**125**	**2008**		**X**	
HAO-QING	**125 2C**	**125**	**2002**		**X**	
JINCHENG	**JC 125 7B**	**125**	**1997**		**X**	
MASH	**125 Scrambler**	**125**	**2013**		**X**	
MASH	**125 Seventy**	**125**	**2013**		**X**	
MOTORHISPANIA	**RX 50 R**	**50**	**2008**		**X**	
MOTORHISPANIA	**MH7 125 Naked**	**125**	**2008**		**X**	

AGPA221						
MARCA Brand	**MODELLO** Model	**CC**	**DA** From	**A** To	**ANT.** Front	**POST.** Rear
MOTORHISPANIA	**RX 125 R**	**125**	**2008**		**X**	
RIEJU	**MRT 50**	**50**	**2009**		**X**	**X**
RIEJU	**MRT 50 Supermotard**	**50**	**2008**		**X**	**X**
RIEJU	**RRX 50**	**50**	**2010**		**X**	**X**
RIEJU	**50 Spike X**	**50**	**2008**		**X**	**X**
RIEJU	**125 Marathon Pro**	**125**	**2009**		**X**	
RIEJU	**125 Marathon Pro Supermotard 9**	**125**	**2009**		**X**	
SUZUKI	**GN 125**	**125**	**1982**	**1990**		**X**
SUZUKI	**GN 125**	**125**	**2005**		**X**	
SUZUKI	**GS 125 E, Katana**	**125**	**1990**	**1994**		**X**
SUZUKI	**GS 125 ESD**	**125**	**1983**	**1994**		**X**
TGB	**50 Bull&t RS/RR**	**50**	**2011**		**X**	
TGB	**50 Bullet**	**50**	**2010**		**X**	
TGB	**125 Bull&t RS/RR**	**125**	**2011**		**X**	

ACCOSSATO

PASTIGLIE BRAKE PADS

APPLICAZIONI PER CODICE PASTIGLIA / applications for pads code

MESCOLA ORGANICA organic compound
OR

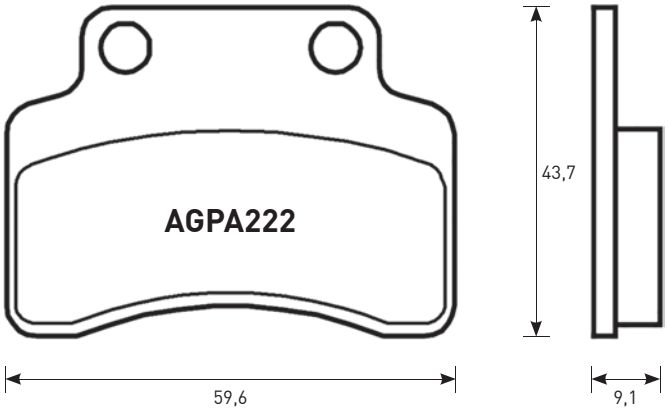

CROSS REFERENCE	
EBC	SFA235
NEWFREN	.FD.0223
FERODO	FDB2191
CL	3047
SBS	141/723

EQUIVALENT OE #
45150 KBK 9000 MZ
45110 J4FT 000
R0200710080
GA023463 1T
404210 TAC 000

AGPA222						
MARCA Brand	MODELLO Model	CC	DA From	A To	ANT. Front	POST. Rear
BENELLI	50 49X (Quattro Nove)	50	2008	2013	X	
CAGIVA	50 Nag	50	2008		X	
CAGIVA	125 Brillo	125	2008		X	
CPI	50 Aragon GP	50	2006		X	
CPI	50 Freaky	50	2007		X	
CPI	50 Hussar	50	2003		X	
CPI	50 Oliver	50	2003		X	
CPI	50 Popcorn	50	2003		X	
CPI	125 Aragon GP	125	2007		X	
GARELLI	50 Flexi	50	2012		X	
GARELLI	50 Xo	50	2012		X	
GARELLI	GSP 50	50	2012		X	
GENERIC	50 Ideo	50	2006		X	
GENERIC	50 ROC	50	2008		X	
GENERIC	50 Stroke	50	2008		X	
GENERIC	50 XOR	50	2006		X	
GENERIC	125 Soho	125	2007		X	
GENERIC	125 Soho	125	2008		X	
GENERIC	125 Stroke	125	2008		X	

AGPA222						
MARCA Brand	MODELLO Model	CC	DA From	A To	ANT. Front	POST. Rear
GENERIC	125 XOR	125	2007		X	
ITALJET	SX1 50	150	2008		X	
KEEWAY	50 Flash Electric	50	2010		X	
KEEWAY	50 Focus	50	2006		X	
KEEWAY	50 Matrix	50	2006		X	
KEEWAY	50 Matrix Electric	50	2010		X	
KEEWAY	50 Matrix Racing Sport	50	2010		X	
KEEWAY	F-NKD 50	50	2010		X	
KEEWAY	RY8 50	50	2007	2009	X	
KEEWAY	RY8 50	50	2010		X	
KEEWAY	125 Focus	125	2006		X	
KEEWAY	125 Matrix	125	2006		X	
KEEWAY	125 Matrix Racing Sport	125	2010		X	
KEEWAY	150 Focus	150	2006		X	
KEEWAY	150 Matrix	150	2006		X	
KEEWAY	150 Matrix Racing Sport	150	2010		X	
KYMCO	50 Calypso	50	1997		X	
KYMCO	50 Heroism	50	1997		X	
KYMCO	125 Calypso	125	1999		X	
KYMCO	125 Heroism	125	1995		X	
KYMCO	150 Heroism	150	1995		X	
PEUGEOT	e-Vivacity		2011		X	
PEUGEOT	50 Vivacity Sportline	50	2011		X	
PEUGEOT	SV 80	80	1996		X	
TGB	GT 50 Veloce	50	2009		X	

PASTIGLIE BRAKE PADS

APPLICAZIONI PER CODICE PASTIGLIA / applications for pads code

MESCOLA ORGANICA organic compound
OR

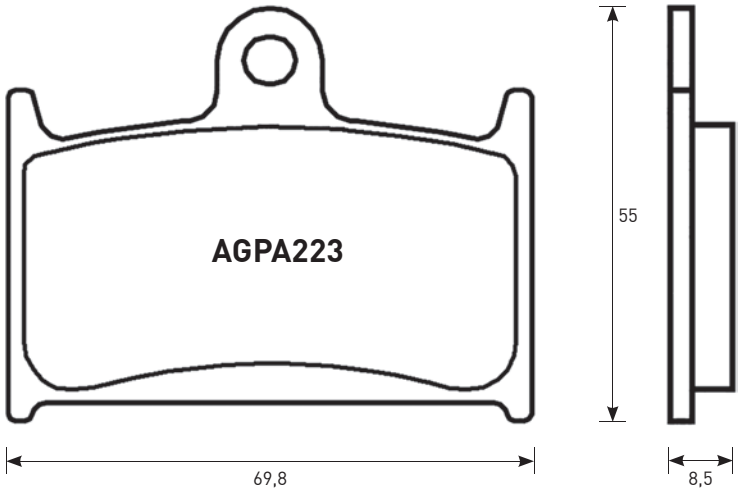

CROSS REFERENCE	
EBC	**FA236**
OGNIBENE	**208**
BRAKING	**707CM55**
NEWFREN	**.FD.0129**
BREMBO	**07SU1407**
FERODO	**FDB557**
CL	**2246**
SBS	**624**

EQUIVALENT OE #	
OEM Suzuki	**59300 17811**
OEM Triumph	**2020073T0301**
OEM Triumph	**T2020245**

AGPA223						
MARCA Brand	**MODELLO** Model	**CC**	**DA** From	**A** To	**ANT.** Front	**POST.** Rear
MZ	**1000 (MUZ) S**	**1000**	**2003**		**X**	
MZ	**1000 (MUZ) SF**	**1000**	**2005**		**X**	
MZ	**1000 (MUZ) SFX**	**1000**	**2007**		**X**	
MZ	**1000 (MUZ) SN**	**1000**	**2005**		**X**	
MZ	**1000 (MUZ) ST**	**1000**	**2007**		**X**	
NISSIN	**4 Piston Caliper**				**X**	
SUZUKI	**RGV 250**	**250**	**1988**		**X**	
SUZUKI	**GSX R 400 R**	**400**	**1990**	**1995**	**X**	
SUZUKI	**GSX R 750**	**750**	**1988**		**X**	
SUZUKI	**GSX R 750**	**750**	**1989**	**1991**	**X**	
SUZUKI	**GSX R 750**	**750**	**1992**	**1993**	**X**	
SUZUKI	**GSX 1100 Katana**	**1100**	**1993**		**X**	
SUZUKI	**GSX R 1100**	**1100**	**1989**	**1992**	**X**	
SUZUKI	**GSF 1200 Bandit**	**1200**	**1995**	**1996**	**X**	
TRIUMPH	**600 Daytona**	**600**	**2003**	**2004**	**X**	
TRIUMPH	**600 Speed Four**	**600**	**2003**	**2006**	**X**	
TRIUMPH	**TT 600**	**600**	**2000**	**2003**	**X**	
TRIUMPH	**650 Daytona**	**650**	**2005**	**2006**	**X**	
TRIUMPH	**750 Daytona**	**750**	**1991**	**1992**	**X**	
TRIUMPH	**900 Daytona**	**900**	**1991**	**1994**	**X**	
TRIUMPH	**900 Daytona, Sprint**	**900**	**1994**		**X**	

AGPA223						
MARCA Brand	**MODELLO** Model	**CC**	**DA** From	**A** To	**ANT.** Front	**POST.** Rear
TRIUMPH	**900 Speed Triple**	**900**	**1994**	**1996**	**X**	
TRIUMPH	**900 Trophy**	**900**	**1996**		**X**	
TRIUMPH	**T509 900 Speed Triple**	**900**	**1997**	**2001**	**X**	
TRIUMPH	**T595 950 Daytona**	**950**	**1996**	**1998**	**X**	
TRIUMPH	**955 Daytona Centennial**	**955**	**2002**		**X**	
TRIUMPH	**955 Daytona from VIN 132513**	**955**	**1999**		**X**	
TRIUMPH	**955 Daytona to VIN 132512**	**955**	**1999**		**X**	
TRIUMPH	**955 Speed Triple**	**955**	**1999**		**X**	
TRIUMPH	**955 Sprint RS**	**955**	**2000**		**X**	
TRIUMPH	**955 Sprint ST**	**955**	**1999**	**2004**	**X**	
TRIUMPH	**1000 Daytona**	**1000**	**1992**		**X**	
TRIUMPH	**1050 Sprint GT ABS**	**1050**	**2011**		**X**	
TRIUMPH	**1050 Sprint ST**	**1050**	**2005**		**X**	
TRIUMPH	**1200 Daytona**	**1200**	**1991**		**X**	
TRIUMPH	**1200 Tiger Explorer**	**1200**	**2012**		**X**	
TRIUMPH	**1200 Trophy**	**1200**	**1996**	**2003**	**X**	
TRIUMPH	**1600 Thunderbird**	**1600**	**2009**		**X**	
TRIUMPH	**1700 Thunderbird Commander**	**1700**	**2014**		**X**	
TRIUMPH	**1700 Thunderbird LT**	**1700**	**2014**		**X**	
TRIUMPH	**1700 Thunderbird Storm**	**1700**	**2011**		**X**	
TRIUMPH	**2300 Rocket III**	**2300**	**2004**		**X**	
TRIUMPH	**2300 Rocket III Classic**	**2300**	**2007**		**X**	
TRIUMPH	**2300 Rocket III Roadster**	**2300**	**2010**		**X**	
TRIUMPH	**2300 Rocket III Touring**	**2300**	**2013**		**X**	
TRIUMPH	**2300 Rocket X**	**2300**	**2015**		**X**	
YAMAHA	**TZ 125**	**125**	**1997**		**X**	
YAMAHA	**TZ 250 (Rad.cal)**	**250**	**2002**		**X**	
YAMAHA	**TZ 250**	**250**	**1990**	**2001**	**X**	
YAMAHA	**FZR 750 R**	**750**	**1989**	**1992**	**X**	

ACCOSSATO

PASTIGLIE BRAKE PADS

APPLICAZIONI PER CODICE PASTIGLIA / applications for pads code

MESCOLA ORGANICA organic compound
OR

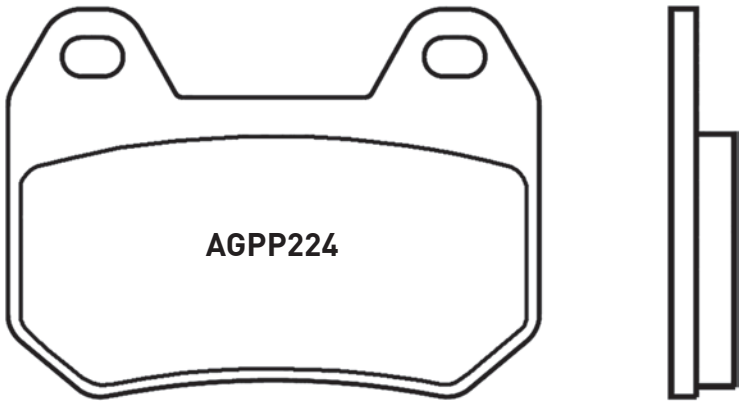

CROSS REFERENCE	
EBC	FA304
NEWFREN	.FD.0277
BREMBO	07BB2507
FERODO	FDB2102
CL	2987
SBS	746

EQUIVALENT OE #	
OEM BMW	34 21 2 333 337
OEM BMW	34 21 7 680 375
OEM BMW	34 21 7 657 492

AGPP224						
MARCA Brand	MODELLO Model	CC	DA From	A To	ANT. Front	POST. Rear
BMW	K 1200 LT	1200	1999	2000		X
BMW	K 1200 LT With Integral ABS	1200	2001	2008		X
BMW	R 1200 CL	1200	2003	2004		X

MESCOLA ORGANICA organic compound
OR

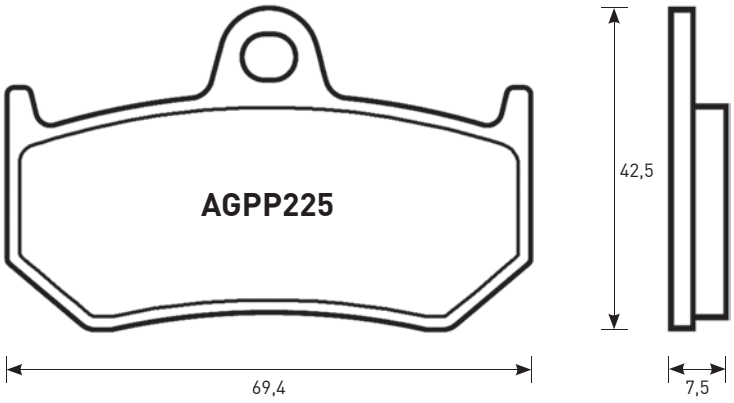

CROSS REFERENCE	
EBC	FA320HH
NEWFREN	.FD.0391
BREMBO	04GR35
FERODO	FDB2198
CL	1203
SBS	763

EQUIVALENT OE #	
OEM MV Agusta	8000 82748

AGPP225						
MARCA Brand	MODELLO Model	CC	DA From	A To	ANT. Front	POST. Rear
MV AGUSTA	675 F3	675	2011	2012		X
MV AGUSTA	750 BRUTALE, BRUTALE S	750	2001	2005		X
MV AGUSTA	750 F4 SPR	750	2001			X
MV AGUSTA	750 F4/F4S	750	1999			X
MV AGUSTA	800 F3	800	2014			X
MV AGUSTA	910 BRUTALE	910	2006	2008		X
MV AGUSTA	910 BRUTALE R	910	2006	2008		X
MV AGUSTA	910 BRUTALE S	910	2006	2008		X

AGPP225						
MARCA Brand	MODELLO Model	CC	DA From	A To	ANT. Front	POST. Rear
MV AGUSTA	920 BRUTALE	920	2012	2014		X
MV AGUSTA	989 BRUTALE R	989	2009			X
MV AGUSTA	990 BRUTALE R	990	2010	2011		X
MV AGUSTA	1000 F4 Mamba	1000	2004	2006		X
MV AGUSTA	1000 F4 R	1000	2006	2007		X
MV AGUSTA	1000 F4 R	1000	2012			X
MV AGUSTA	1000 F4 RC	1000	2015			X
MV AGUSTA	1000 F4 RR	1000	2012			X
MV AGUSTA	1000 F4 TAMBURINI	1000	2004	2006		X
MV AGUSTA	1000 F4S	1000	2004	2006		X
MV AGUSTA	1078 BRUTALE RR	1078	2009			X
MV AGUSTA	1078 F4 CC	1078	2008	2011		X
MV AGUSTA	1078 F4 RR	1078	2008	2011		X
MV AGUSTA	1090 BRUTALE CORSE	1090	2014			X
MV AGUSTA	1090 BRUTALE R	1090	2012			X
MV AGUSTA	1090 BRUTALE RR	1090	2010			X

PASTIGLIE BRAKE PADS

APPLICAZIONI PER CODICE PASTIGLIA / applications for pads code

MESCOLA ORGANICA organic compound
OR

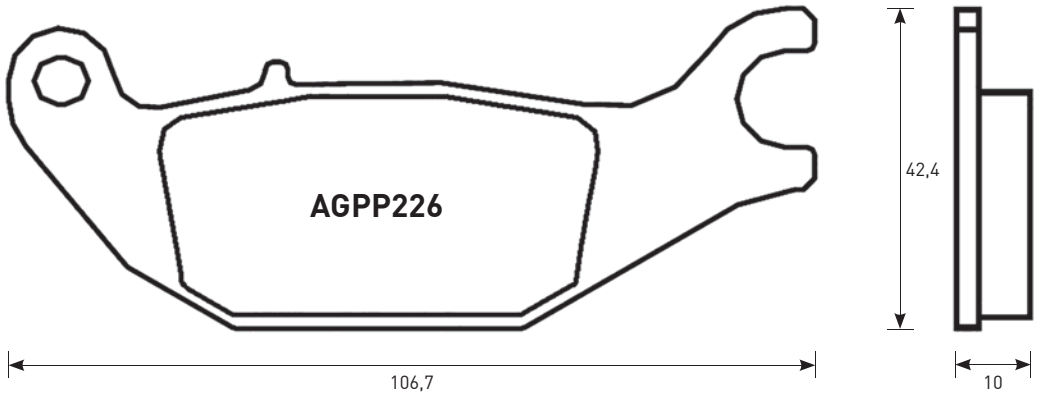

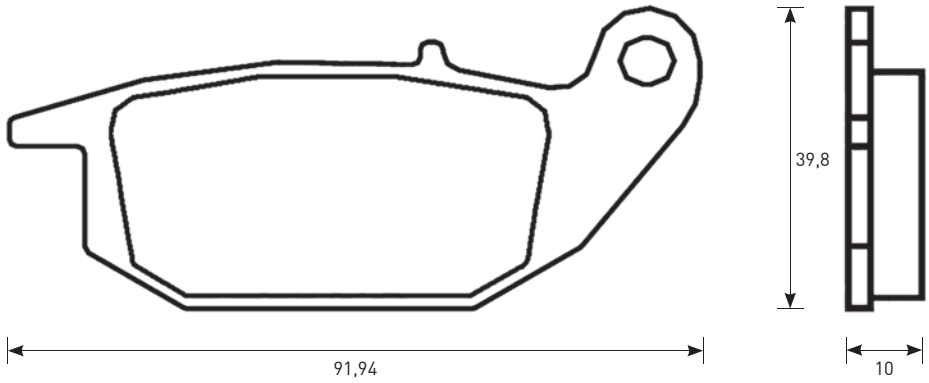

CROSS REFERENCE	
EBC	**FA343**
NEWFREN	**.FD.0331**
BREMBO	**07HO4905**
FERODO	**FDB2143**
CL	**1067**
SBS	**784**

EQUIVALENT OE #	
OEM Honda	**06435 KPC 641**
OEM Honda	**06435 KPC 642**
OEM Honda	**06435 KPP 901**
OEM Honda	**06435 KPP 902**

AGPP226						
MARCA Brand	**MODELLO** Model	**CC**	**DA** From	**A** To	**ANT.** Front	**POST.** Rear
HONDA	**CBR 125 R 04**	**125**	**2004**	**2010**		**X**
HONDA	**XLV 125 Varadero 01**	**125**	**2001**			**X**
HONDA	**CBR 150 R 00**	**150**	**2000**	**2003**		**X**
HONDA	**CBR 150 R 04**	**150**	**2004**			**X**

ACCOSSATO

PASTIGLIE BRAKE PADS

APPLICAZIONI PER CODICE PASTIGLIA / applications for pads code

MESCOLA ORGANICA organic compound
OR

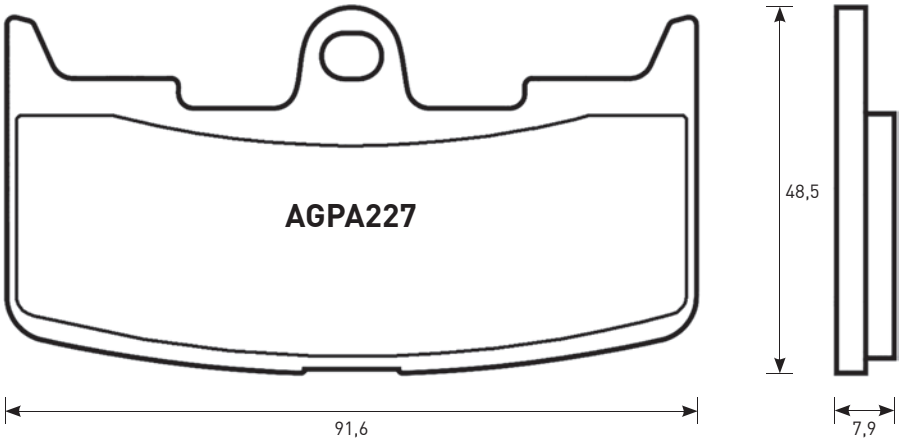

CROSS REFERENCE	
EBC	FA145HH
BRAKING	895CM55
NEWFREN	.FD.0344
BREMBO	07GR68
FERODO	FDB2145
SBS	795

EQUIVALENT OE #	
OEM Buell	H0300-02A8

AGPA227						
MARCA Brand	MODELLO Model	CC	DA From	A To	ANT. Front	POST. Rear
BUELL	XB9R 984 Firebolt	984	2002	2010	X	

AGPA227						
MARCA Brand	MODELLO Model	CC	DA From	A To	ANT. Front	POST. Rear
BUELL	XB9S 984 Lightning	984	2003	2010	X	
BUELL	XB9SX 984 CityX	984	2005	2010	X	
BUELL	XB12R 1200 Firebolt	1200	2004	2008	X	
BUELL	XB12S 1200 Lightning	1200	2004	2008	X	
BUELL	XB12Scg 1200 Lightning	1200	2006	2008	X	
BUELL	XB12Ss 1200 Lightning Long	1200	2006	2008	X	
BUELL	XB12STT 1200 Super TT	1200	2007	2010	X	
BUELL	XB12X 1200 Ulysses	1200	2006	2010	X	

MESCOLA ORGANICA organic compound
OR

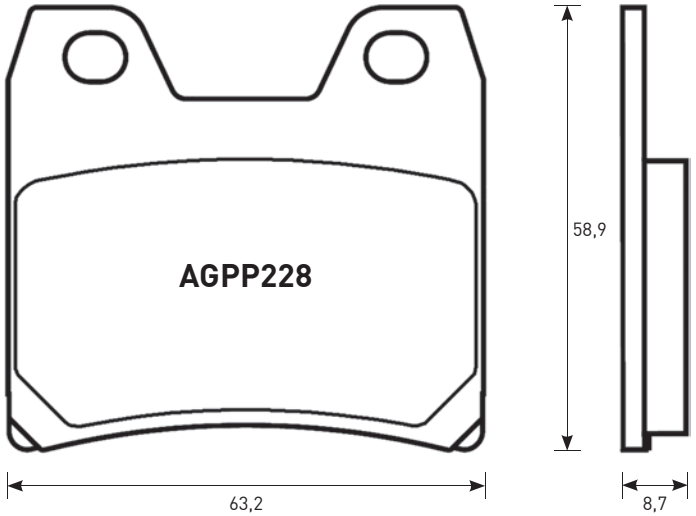

CROSS REFERENCE	
EBC	FA348
NEWFREN	.FD.0341
BREMBO	07YA4007
FERODO	FDB2150
CL	1066
SBS	770

EQUIVALENT OE #	
OEM Yamaha	5LV W0046 50

AGPP228						
MARCA Brand	MODELLO Model	CC	DA From	A To	ANT. Front	POST. Rear
YAMAHA	FZS 1000 Fazer 01	1000	2001	2005		X
YAMAHA	XJR 1300 02	1300	2002			X
YAMAHA	XJR 1300 Racer 15	1300	2015			X

PASTIGLIE BRAKE PADS

APPLICAZIONI PER CODICE PASTIGLIA / applications for pads code

MESCOLA ORGANICA organic compound
OR

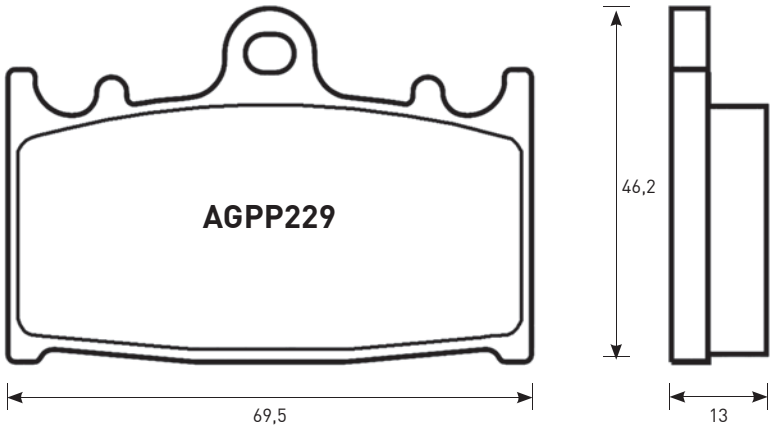

CROSS REFERENCE	
EBC	**FA366**
NEWFREN	**.FD.0371**
BREMBO	**07SU30**
FERODO	**FDB2163**
CL	**1145**
SBS	**789**

EQUIVALENT OE #	
OEM Suzuki	**69100 10820**

AGPP229						
MARCA Brand	**MODELLO** Model	**CC**	**DA** From	**A** To	**ANT.** Front	**POST.** Rear
SUZUKI	**C 1500 Intruder Left/ Rear**	**1500**	**2005**	**2010**		**X**
SUZUKI	**VL 1500 Intruder LC Left/Rear**	**1500**	**2002**			**X**

MESCOLA ORGANICA organic compound
OR

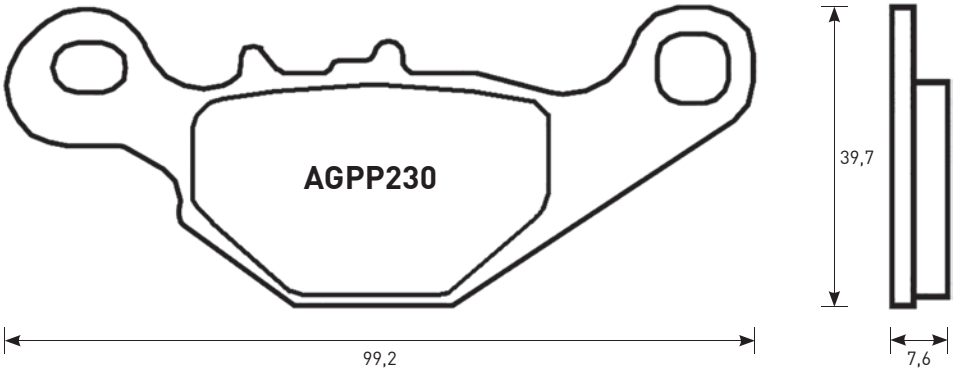

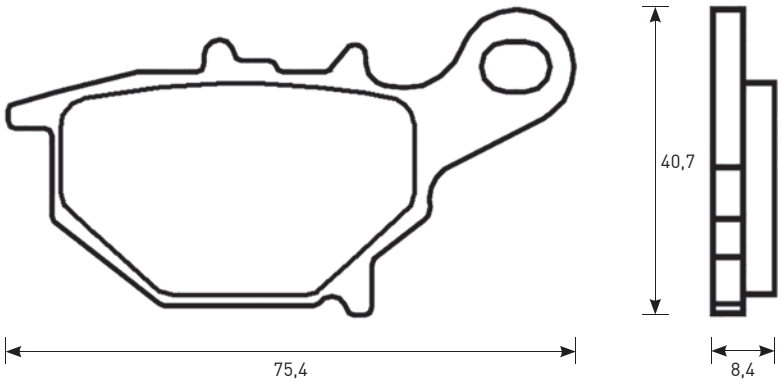

CROSS REFERENCE	
EBC	**FA401**
BRAKING	**905CM44**
NEWFREN	**.FD.0399**
BREMBO	**07SU31**
FERODO	**FDB2197**
CL	**1152**
SBS	**820**

EQUIVALENT OE #	
OEM Suzuki	**69100 03880**

AGPP230						
MARCA Brand	**MODELLO** Model	**CC**	**DA** From	**A** To	**ANT.** Front	**POST.** Rear
SUZUKI	**RM 85 , L**	**85**	**2005**			**X**

PASTIGLIE BRAKE PADS

APPLICAZIONI PER CODICE PASTIGLIA / applications for pads code

MESCOLA ORGANICA organic compound
OR

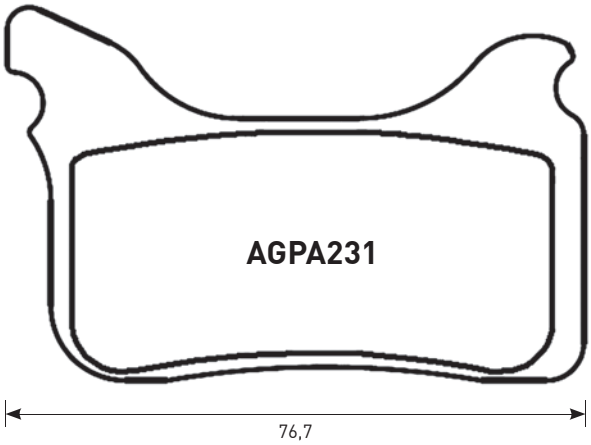

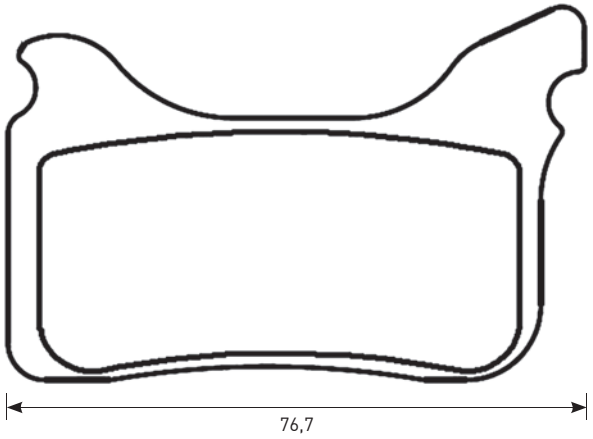

CROSS REFERENCE	
EBC	MXS405
FERODO	FDB2245
SBS	842

EQUIVALENT OE #	
OEM Aprilia	854972

AGPA231						
MARCA Brand	MODELLO Model	CC	DA From	A To	ANT. Front	POST. Rear
APRILIA	SXV 450	450	2006		X	

AGPA231						
MARCA Brand	MODELLO Model	CC	DA From	A To	ANT. Front	POST. Rear
APRILIA	SXV 550	550	2006		X	
APRILIA	650 Pegaso Factory	650	2007	2009	X	
HUSABERG	FS 450 c	450	2006	2008	X	
HUSABERG	FS 650 e, c	650	2006	2008	X	
KTM	SX 450 SMR	450	2004	2006	X	
KTM	SX 525 SMR	525	2004		X	

MESCOLA ORGANICA organic compound
OR

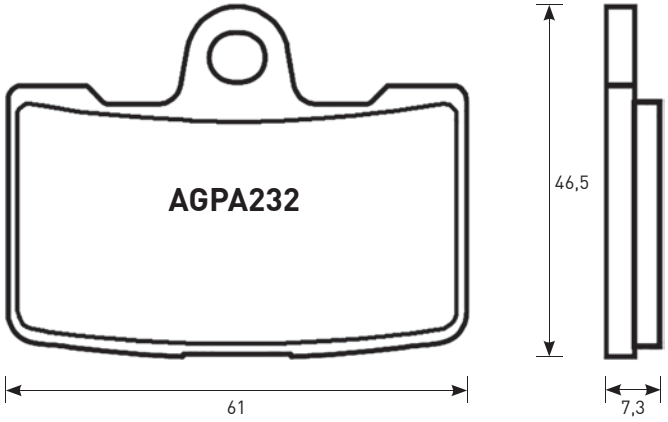

CROSS REFERENCE	
EBC	FA454/4HH
BRAKING	939CM55
NEWFREN	.FD.0438
FERODO	FDB2240
SBS	856

EQUIVALENT OE #	
OEM Buell	H0300 1AMA

AGPA232						
MARCA Brand	MODELLO Model	CC	DA From	A To	ANT. Front	POST. Rear
BUELL	1125 CR	1125	2009	2010	X	
BUELL	1125 R	1125	2008	2010	X	
BUELL	XB12R 1200 Firebolt	1200	2009	2010	X	
BUELL	XB12Scg 1200 Lightning	1200	2009	2010	X	
BUELL	XB12Ss 1200 Lightning Long	1200	2009	2010	X	
EBR	1190 RS	1190	2012	2015	X	
EBR	1190 RX	1190	2014	2015	X	
EBR	1190 SX	1190	2014	2015	X	

PASTIGLIE BRAKE PADS

APPLICAZIONI PER CODICE PASTIGLIA / applications for pads code

MESCOLA ORGANICA organic compound
OR

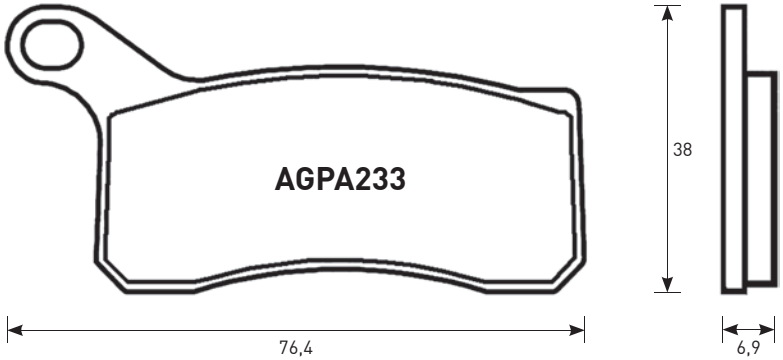

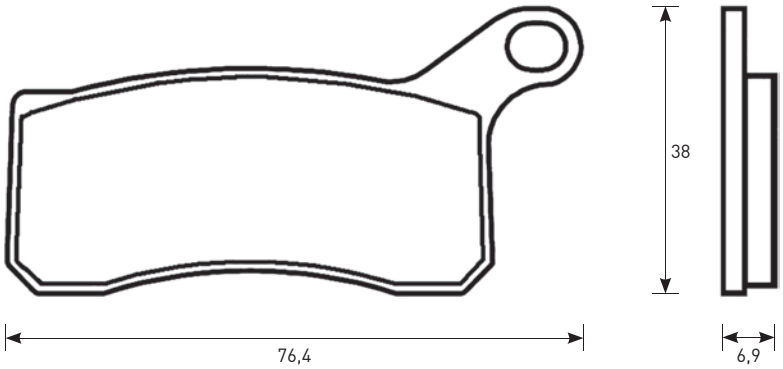

CROSS REFERENCE	
EBC	FA462R
CL	1204
SBS	866

EQUIVALENT OE #
830 13 030 100
K00979315

AGPA233						
MARCA Brand	MODELLO Model	CC	DA From	A To	ANT. Front	POST. Rear
KTM	SX 450 ATV	450		2008	X	
KTM	XC 450 ATV	450		2008	X	
KTM	SX 505 ATV	505		2008	X	
KTM	XC 505 ATV	505		2008	X	

MESCOLA ORGANICA organic compound
OR

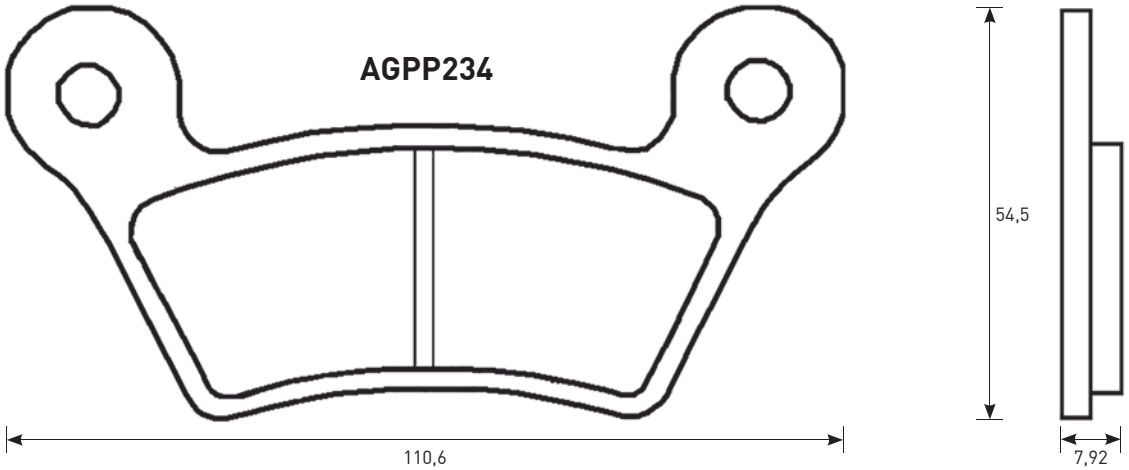

CROSS REFERENCE	
EBC	FA473

EQUIVALENT OE #
219800031
219800165

AGPP234						
MARCA Brand	MODELLO Model	CC	DA From	A To	ANT. Front	POST. Rear
CAN-AM	Spyder SM5 GS990 (3 wheeler)	990	2008	2011		X
CAN-AM	Spyder SE5 GS990 (3 wheeler)	990	2008	2011		X
CAN-AM	Spyder RS SES 990cc	990	2008	2009		X

AGPP234						
MARCA Brand	MODELLO Model	CC	DA From	A To	ANT. Front	POST. Rear
CAN-AM	Spyder RS SMS 990cc	990	2008	2009		X
CAN-AM	Spyder RS Phantom Black		2009			X
CAN-AM	Spyder RT-S		2010	2012		X
CAN-AM	Spyder RT		2010	2012		X
CAN-AM	Spyder RT-S		2010	2012		X
CAN-AM	Spyder RS		2010	2012		X
CAN-AM	Spyder RT LTD		2011	2012		X

PASTIGLIE BRAKE PADS

APPLICAZIONI PER CODICE PASTIGLIA / applications for pads code

MESCOLA ORGANICA organic compound
OR

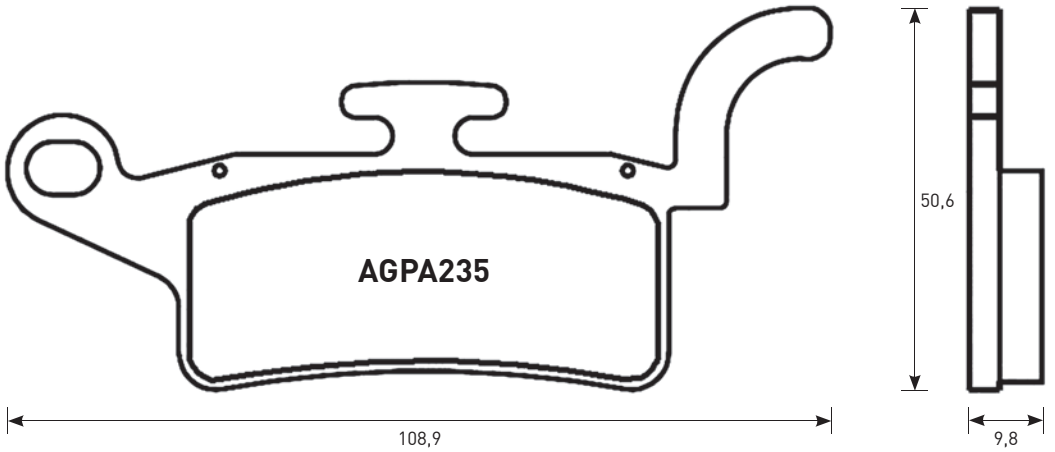

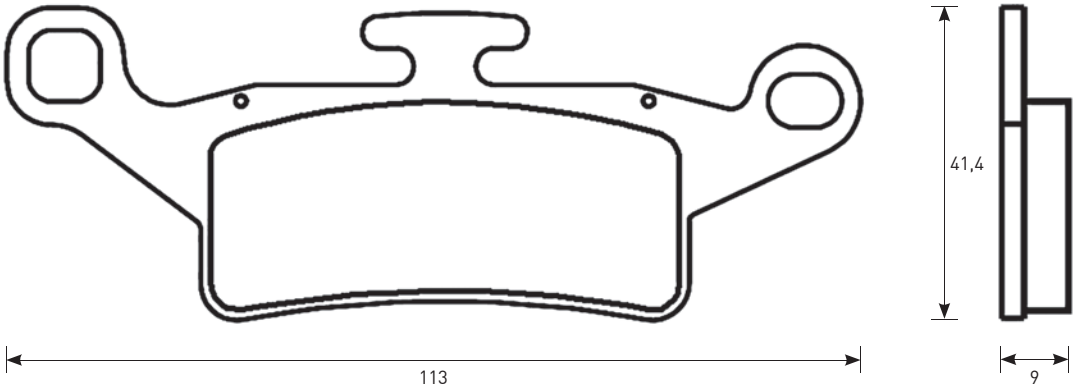

CROSS REFERENCE	
EBC	SFA492
BRAKING	961SM1
BREMBO	7093
FERODO	FDB2264
CL	3098
SBS	208

EQUIVALENT OE #	
OEM Yamaha	5S9 W004S 00
OEM Yamaha	52S F5811 00

AGPA235						
MARCA Brand	MODELLO Model	CC	DA From	A To	ANT. Front	POST. Rear
MBK	YW 125 Z	125	2010		X	
YAMAHA	125 Xenter	125	2012		X	
YAMAHA	BWs 125	125	2010		X	
YAMAHA	YW 125 Z	125	2010		X	
YAMAHA	150 Xenter	150	2012		X	

MESCOLA ORGANICA organic compound
OR

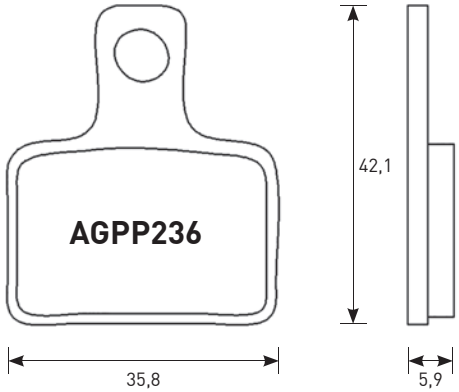

CROSS REFERENCE	
EBC	FA495
NEWFREN	.FD.0496
FERODO	FDB2267
CL	1139
SBS	895

EQUIVALENT OE #	
OEM Beta	7360718000

AGPP236						
MARCA Brand	MODELLO Model	CC	DA From	A To	ANT. Front	POST. Rear
BETA	125 EVO	125	2009			X
BETA	200 EVO	200	2009			X
BETA	250 EVO (2-T / 4-T)	250	2009			X
BETA	290 EVO	290	2009			X
BETA	300 EVO	300	2009			X

PASTIGLIE BRAKE PADS

APPLICAZIONI PER CODICE PASTIGLIA / applications for pads code

MESCOLA ORGANICA organic compound
OR

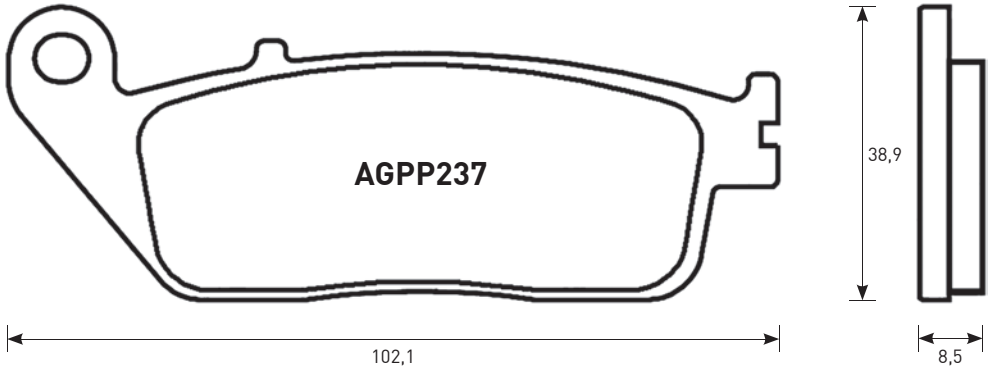

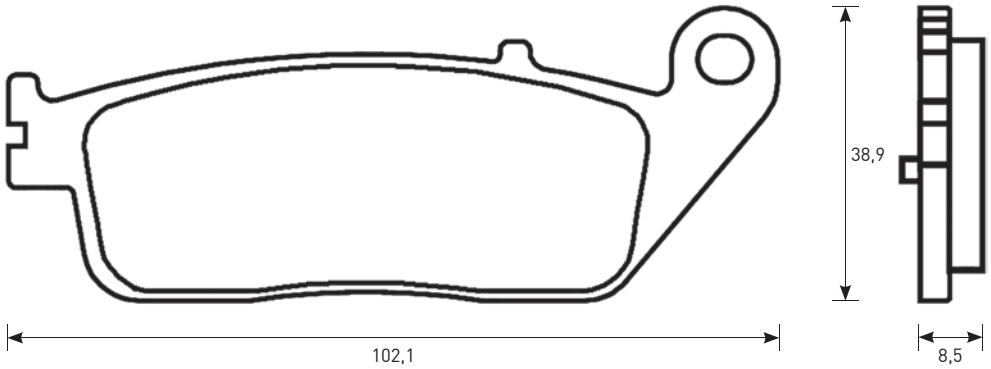

CROSS REFERENCE	
EBC	**SFA608**
OGNIBENE	**202**
SBS	**212**

EQUIVALENT OE #	
/	**/**

AGPP237						
MARCA Brand	**MODELLO** Model	**CC**	**DA** From	**A** To	**ANT.** Front	**POST.** Rear
KYMCO	**400 Xciting i**	**400**	**2012**			**X**
KYMCO	**500 Xciting**	**500**	**2004**			**X**
KYMCO	**500 Xciting i Evo ABS**	**500**	**2011**			**X**
KYMCO	**500 Xciting R ABS**	**500**	**2009**			**X**
KYMCO	**700 MyRoad, ABS**	**700**	**2009**			**X**

MESCOLA ORGANICA organic compound
OR

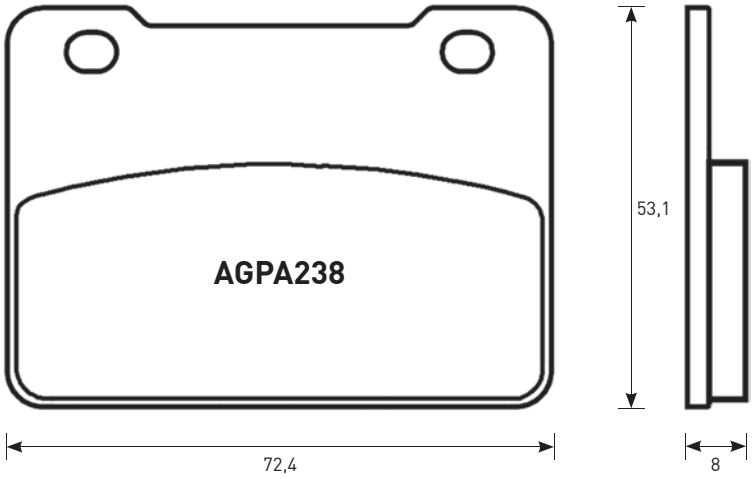

CROSS REFERENCE	
EBC	**SFA627**
SBS	**215**

EQUIVALENT OE #
45130 L4A 300
45135 L4A 300

AGPA238						
MARCA Brand	**MODELLO** Model	**CC**	**DA** From	**A** To	**ANT.** Front	**POST.** Rear
SYM	**400 i MaxSym**	**400**	**2012**		**X**	
SYM	**600 i MaxSym**	**600**	**2014**		**X**	

ACCOSSATO

PASTIGLIE BRAKE PADS

APPLICAZIONI PER CODICE PASTIGLIA / applications for pads code

MESCOLA ORGANICA organic compound
OR

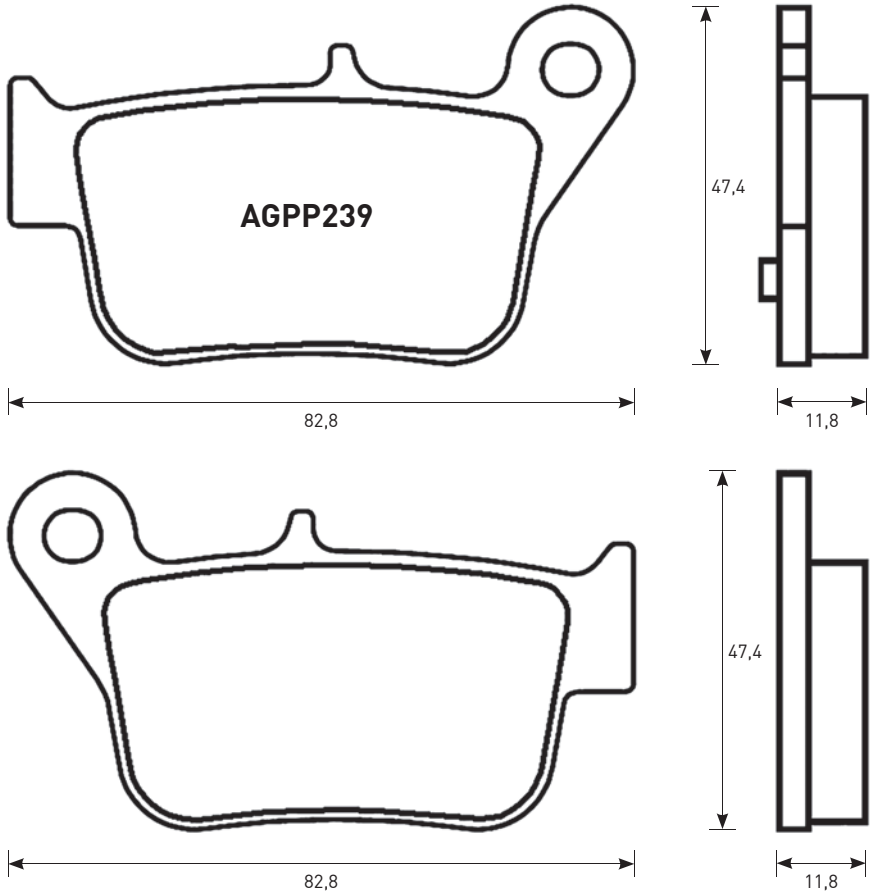

CROSS REFERENCE	
EBC	SFA628
SBS	218

EQUIVALENT OE #
43140 L4A 300

AGPP239						
MARCA Brand	MODELLO Model	CC	DA From	A To	ANT. Front	POST. Rear
SYM	400 i MaxSym	400	2011			X
SYM	400 i MaxSym	400	2012			X
SYM	600 i MaxSym	600	2014			X

PASTIGLIE BRAKE PADS

APPLICAZIONI PER CODICE PASTIGLIA / applications for pads code

MESCOLA ORGANICA organic compound
OR

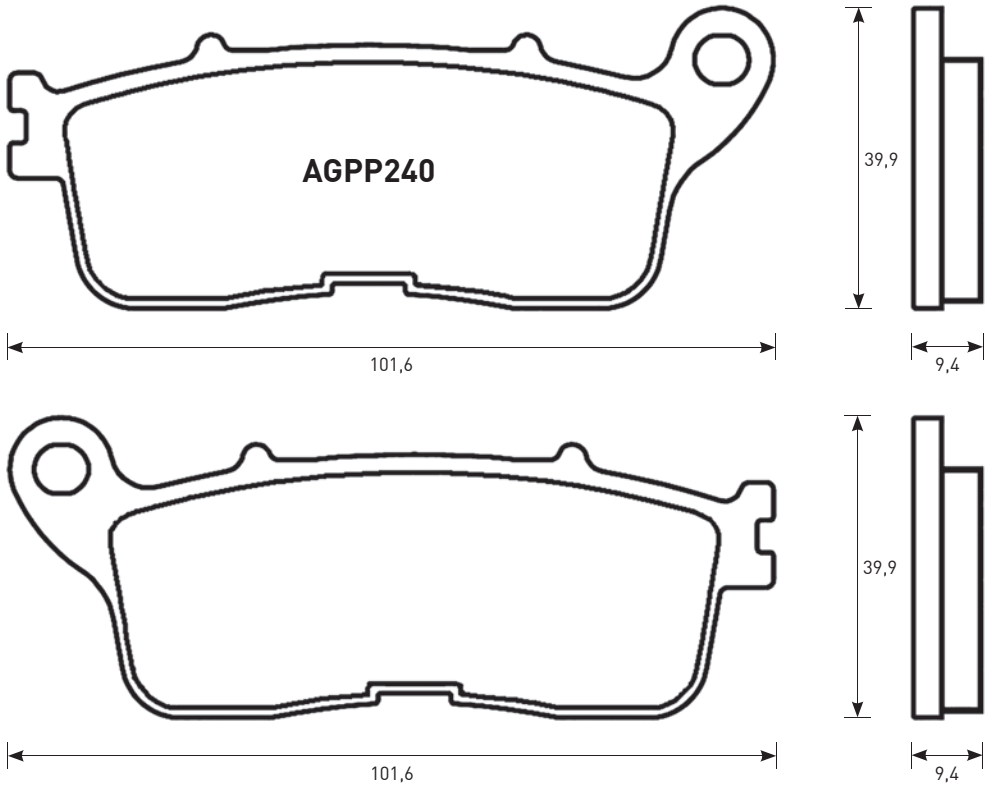

CROSS REFERENCE	
EBC	**FA636HH**
SBS	**892**

EQUIVALENT OE #
06435 MGE D01

AGPP240						
MARCA Brand	**MODELLO** Model	**CC**	**DA** From	**A** To	**ANT.** Front	**POST.** Rear
HONDA	**VFR 1200 F w/DCT**	**1200**	**2010**			**X**
HONDA	**VFR 1200 XC Crosstourer**	**1200**	**2012**			**X**
HONDA	**VFR 1200 XDC Crosstourer w/DCT**	**1200**	**2012**			**X**

ACCOSSATO

dischi freno
brake rotor



dischi freno brake rotor

I DISCHI ACCOSSATO RACING SONO NATI DALL'ESPERIENZA MATURATA NELLE COMPETIZIONI SPORTIVE DI SUPERBIKE, MOTO 2 E MOTO 3. IL PARTICOLARE DISEGNO DEI DISCHI ED I MATERIALI UTILIZZATI PERMETTONO DI TRASFERIRE LA FORZA FRENANTE IN MANIERA EFFICACE, GRAZIE A UN APPROFONDITO STUDIO REALIZZATO SULLE TOLLERANZE E AL "GIOCO" TRA LA CAMPANA E LA FASCIA FRENANTE. IL RIDOTTO PESO DEL DISCO COMPORTA UN GRANDE VANTAGGIO NELLA GUIDABILITÀ E NEL CONTROLLO DELLA MOTO. ACCOSSATO RACING HA TRE LINEE PRODOTTO:

DISCHI DK

I DISCHI DELLA LINEA DK PRESENTANO LE STESSE SPECIFICHE DEI DISCHI FRENO ORIGINALI E SONO PERCIÒ INTERCAMBIABILI A QUELLI DI PRIMO EQUIPAGGIAMENTO.

DISCHI DKS

LA LINEA DKS NASCE PER L'UTILIZZO IN PISTA PER LE CATEGORIE NELLE QUALI NON È CONSENTITA LA SOSTITUZIONE RADICALE DELL'IMPIANTO FRENANTE. IN QUESTI DISCHI FLOTTANTI, I NOTTOLINI SI OCCUPANO SOLO DI GARANTIRE L'ASSEMBLAGGIO TRA LA CAMPANA IN ERGAL E LA FASCIA FRENANTE IN ACCIAIO, MENTRE LA TRASMISSIONE DELLA COPPIA È AFFIDATA ALLE PARETI IN GRADO DI GARANTIRE COSTANZA DURANTE LA DILATAZIONE TERMICA E RESISTENZA ALL'USURA.

DISCHI DKR

PROGETTATI PER LAVORARE CON PINZE RACING, HANNO LA FASCIA FRENANTE DA 30 MM CON SPESSORE MAGGIORATO. PER OTTENERE UNA RIDUZIONE DELLE MASSE, LA FASCIA FRENANTE VIENE LAVORATA MECCANICAMENTE PER RIDURRE LO SPESSORE NELLE ZONE NON A CONTATTO CON LE PASTIGLIE. IL COLLEGAMENTO CON LA CAMPANA IN ERGAL AVVIENE TRAMITE 12 NOTTOLINI REALIZZATI CON LO STESSO TIPO DI MATERIALE. LO SVILUPPO DI QUESTO DISCO HA PORTATO ALLA REALIZZAZIONE DI UNA LINEA PRODOTTO DAL DESIGN ESCLUSIVO E ADATTA A TUTTE LE COMPETIZIONI SPORTIVE PIÙ ESTREME.

Accossato Racing experience in brake rotors stems from Superbike, Moto 2 and Moto 3 competitions. Their specific design and the accurate selection of raw materials allow the Accossato Racing brake rotors to apply a highly effective braking force ; this is also due to the very in-depth studies about tolerances and clearance between disc-bell and braking strip. Their restrained weight represents another great advantage in terms of steering and motorbike control.
Accossato Racing offers three product lines:

DK Brake Rotors

Perfectly interchangeable with OEM equipment, DK line presents the same specificities as original brake rotors.

DKS Brake Rotors

DKS line is meant for circuit use, for categories where utter braking system replacement is not allowed. In DKS floating brake rotors, pins guarantee the right assembly between the ergal-made disc-bell and braking strip made of steel. Torque transmission is entrusted to inside, able to preserve constancy from thermal expansion and wear resistance.

DKR Brake Rotors

Specifically designed for racing brake calipers, DKR brake rotors are provided with a 30mm- braking strip and oversize thickness. In order to benefit from mass reduction, braking strip undergoes machining which slims the portions of its surface out of contact with brake pads. Connection to the ergal-made disc-bell is given by 12 pins made of the same raw material.
By developing DKR line, Accossato Racing created a product of exclusive design and intense use: a "must have" for the highest level competitions!

1 DISCHI IN ACCIAIO

1.1. MONTAGGIO

A. CONTROLLARE CHE NON CI SIANO BAVE O ALTRI RESIDUI DI LAVORAZIONE NELLA COPPIA DI TRASMISSIONE.

B. IL DISCO DEVE FACILMENTE MONTARE SULLA RUOTA.

C. I FORI DI FISSAGGIO DEL DISCO DEVONO AVERE UN DIAMETRO ADEGUATO ALLA VITE, LE VITI DEVONO ESSERE DELLA QUALITÀ E DELLA LUNGHEZZA ADEGUATA AL LAVORO CHE DEVONO SVOLGERE ED IL LORO SERRAGGIO DEV'ESSERE EFFETTUATO CON UNA CHIAVE DINAMOMETRICA , TARATA IN MANIERA CORRETTA.

D. È CONSIGLIABILE APPLICARE LE VERNICI TERMOVIRANTI IN MODO DA CONTROLLARE LA TEMPERATURA D'ESERCIZIO.

1.2. ISPEZIONI

IL DISCO DEVE POTER FLOTTARE LIBERAMENTE DOPO IL MONTAGGIO. LA FLOTTANZA MINIMA DEVE ESSERE DI 0,2 MM.

1.3. NOTE

IL DISCO NON DEVE ESSERE STATO SOGGETTO A IMPATTI OPPURE CONTAMINATO DA LIQUIDI CORROSIVI, OLIO O GRASSO.

1 Steel rotors

1.1. Assembly

a. Check that the rotor bell and the wheel mounting faces are free from flecks and residuals.

b. The rotor must fit into the wheel easily.

c. The rotor must be mounted into the wheel using bolts having a diameter which corresponds to the holes in the mounting bell. Screws must have the quality and length suggested by the manufacturer and must be tightened at the appropriate torque.

d. It is suggested to use thermal paints in order to check processes temperatures.

1.2. Inspections

After assembling, the rotor should fluctuate freely, with a minimal movement equal to 0,2 mm.

1.3. Notes

The rotor must not have been affected to shocks or impacts or soiled by liquids, oils and greases.

2 PASTIGLIE PER DISCHI IN ACCIAIO

2.1. MONTAGGIO

A. LE PASTIGLIE DEVONO POTER ESSERE INSERITE NELLA PINZA SENZA INTERFERENZA E SENZA DOVER APPLICARE UNA FORZA ECCESSIVA.

B. LE PASTIGLIE, UNA VOLTA MONTATE, DEVONO RIENTRARE AL DI SOTTO DEL DIAMETRO ESTERNO DEL DISCO DI CIRCA 0,5 MM. PER OTTENERE QUESTA POSIZIONE SI SFRUTTA IL GIOCO ESISTENTE TRA I BULLONI DI FISSAGGIO ED I FORI SUL SUPPORTO.

2.2. ISPEZIONE

VERIFICATE CHE IL PERNO DI SOSTEGNO PASTIGLIE E LA COPIGLIA DI RITEGNO SIANO CORRETTAMENTE MONTATI. SUGGERIAMO DI METTERE I VARI COMPONENTI IN SICUREZZA UTILIZZANDO FILO DI FERRO PASSATO NEGLI APPOSITI FORI.

3 CONTROLLO FINALE

DOPO AVER PERCORSO ALCUNI GIRI IN PISTA, È SAREBBE CONVENIENTE EFFETTUARE I SEGUENTI CONTROLLI.

A. LA RUOTA DEVE POTER RUOTARE LIBERAMENTE (LA COPPIA RESIDUA DEVE ESSERE QUINDI MINIMA).

B. NON CI DEVE ESSERE ALCUNA INTERFERENZA TRA DISCO E PINZA FRENO.

C. LA TEMPERATURA DELLA PINZA DURANTE IL FUNZIONAMENTO NON DEVE SUPERARE I 130°.

4 ISPEZIONE COMPONENTI DOPO L'USO

4.1. RACCORDI TUBAZIONI

VERIFICARE CHE NON CI SIANO PERDITE DAI VARI COMPONENTI; SE CE NE FOSSE UNA DELLE GUARNIZIONI DEI RACCORDI PROVARE AD AUMENTARE LEGGERMENTE LA CHIUSURA DEL BOCCHETTONE. SE LA PERDITA PERSISTESSE, SOSTITUIRE IL COMPONENTE.

4.2. DISCHI IN ACCIAIO

A. IL DISCO DEVE ESSERE ASSOLUTAMENTE PRIVO DI CRICCHE (SIANO ESSE GENERATE DAI FORI DI PULIZIA PASTIGLIE OPPURE DAL BORDO DEL DISCO) E NON DEVE ESSERE CONSUMATO IN ALCUN MODO.

B. LO SPESSORE MINIMO DEI DISCHI IN ACCIAIO È DI 0,5 MM. IN MENO RISPETTO ALLO SPESSORE DI PARTENZA.

LA SOSTITUZIONE DI TUTTO L'INSIEME DISCO/CAMPANA.

4.3 PASTIGLIE FRENO

4.3.1. CONTROLLO CONSUMO PASTIGLIE

LO SPESSORE DEL MATERIALE D'ATTRITO DOVREBBE ESSERE SUPERIORE AI 2 MM.

4.3.2. CONSUMO ANOMALO PASTIGLIE

LE PASTIGLIE DEVONO CONSUMARSI UNIFORMEMENTE; EFFETTUARE I SEGUENTI CONTROLLI:

A. LA DIFFERENZA DELLO SPESSORE TRA LA PASTIGLIA INTERNA E QUELLA ESTERNA DEVE ESSERE INFERIORE ALL' 1 MM.

B. LA DIFFERENZA TRA LO SPESSORE SUPERIORE E QUELLO INFERIORE DEVE ESSERE INFERIORE ALL' 1 MM.

C. LA DIFFERENZA TRA LO SPESSORE ANTERIORE E QUELLO POSTERIORE (RADIALE) NON DEVE SUPERARE L'1 MM. PASTIGLIE CON CONSUMI AL DI FUORI DI QUANTO INDICATO DEVONO ESSERE SOSTITUITE.

4.3.3. DEFORMAZIONE DELLA PIASTRINA METALLICA

LA PLANARITÀ DELLA PIASTRINA NON DEVE ECCEDERE I 0,2 MM. IN CASO DI DEFORMAZIONE SUPERIORE LA PASTIGLIA DEVE ESSERE SOSTITUITA.

4.4. COPPIA RESIDUA

VERIFICATE CHE LA RUOTA POSSA GIRARE LIBERAMENTE, SENZA ECCESSIVA COPPIA RESIDUA.

2 Pads for steel rotors

2.1. Assembly

a. Pads must be inserted inside the caliper without forcing.

b. Once mounted, pads must not protrude from the rotor outer circumference. It is admitted an excess of 0,5 mm. max. To obtain the correct position of the caliper, as described above, it can be moved relative to the fork by using the existing clearance between the fixing holes and the caliper bolts.

2.2. Inspection

Verify that the pads, the pad piVot and the cotter pin have been correctly mounted. It is suggested to fasten the components passing iron wire through the specific hole.

3 Final check

After running a few laps, it is necessary to execute the following checks:

The wheel must rotate freely (the residual torque must be minimal)

There must not be any interference between rotor and caliper.

Caliper temperature must not exceed 130° C.

4 Following use inspection components

4.1. Tube fittings

Verify that there are no leakages from the various fittings. In case of leakages, increase the tighten torque or replace the defective component.

4.2. Steel rotors

a. The rotor must be free from cracks (either originating from the holes or from the borders) and must not show anything abnormal.

b. The steel rotors minimal thickness is equal to 0,5 mm, less than the original thickness.

The replacement of the brake disc means the replacement of the whole disc-bell.

4.3. Brake pads

4.3.1. Pads wear check

Friction material thickness should not be lower than 2 mm.

4.3.2. Abnormal pads wear

Pads must wear out uniformly. The following checks should be done:

Difference between internal pad thickness and external pad thickness must not exceed 1 mm.

Difference between upper thickness and lower thickness must not exceed 1 mm.

Difference between front thickness and rear thickness (pad radial) must not exceed 1 mm.

4.3.3. Back plate deformation

Back plate flatness must not exceed 0,2 mm. In case of excessive back plate, pad must be changed.

4.4. Residual torque

Verify that the wheel may rotate freely without residual torque.

INDICE LINEA DISCHI FRENO
brake rotors index

ANALITICO DISCHI FRENO
brake rotors application list: **508 - 585**

SCHEDE DISCHI FRENO

— **LINEA DK** / DK line: **586 - 709**

— **LINEA DKS** / DKS line: **710 - 723**

— **LINEA DKR** / DKR line: **724 - 729**



DISCHI DK

DK brake rotors

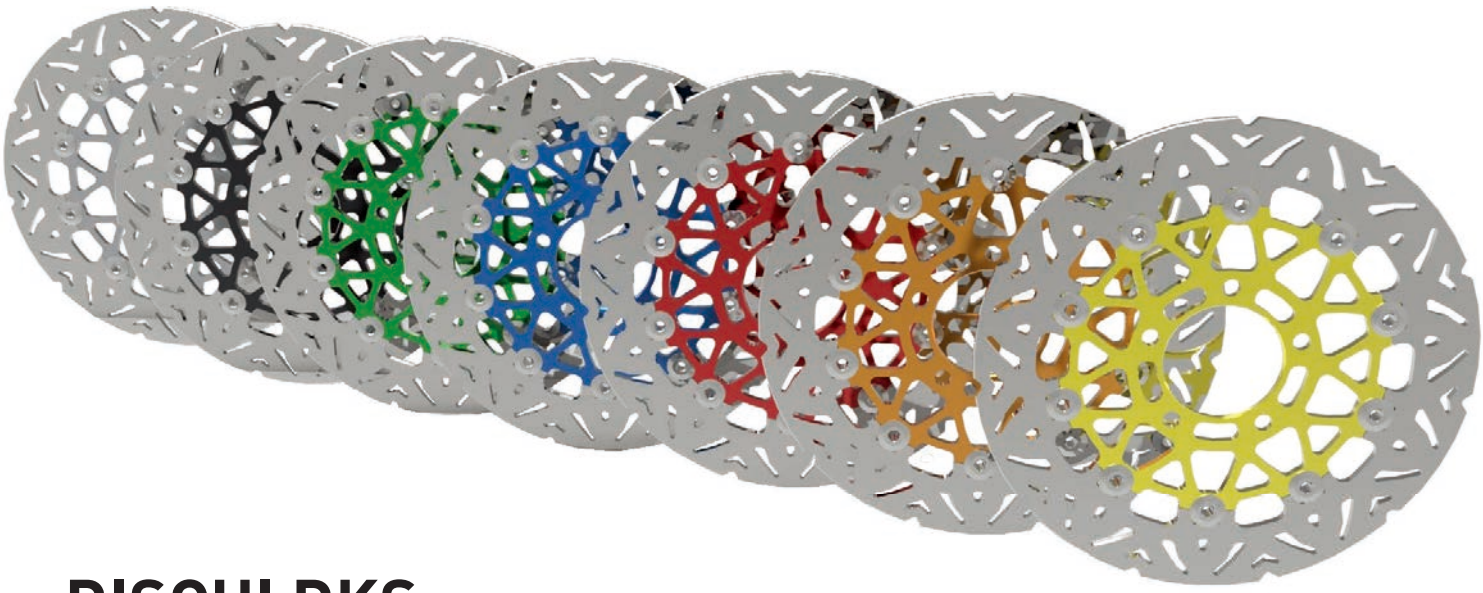

DISCHI DKS

DKS brake rotors

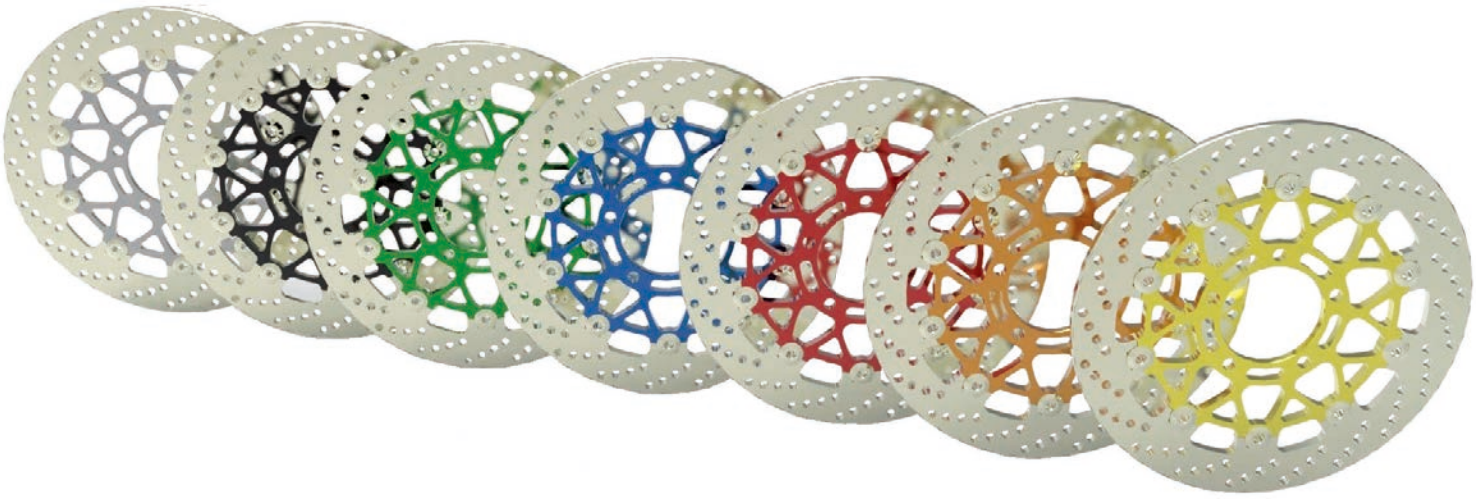

INDICE ANALITICO
index

MARCA / Brand	MODELLO / Model	CC	DA From	A To	DK: ANTERIORE / Front				
					FISSO / Fix		FLOTTANTE / Floating		
					BREMBO	ACCOSSATO	BREMBO	ACCOSSATO	
ADIVA									
ADIVA	AD 200	250	2006	→	68B407B6	DK092			
APRILIA									
APRILIA	AREA 51	50	1998	2002					
APRILIA	GULLIVER	50	1995	2000	68B40717	DK227			
APRILIA	HABANA	50	1999	→	68B40717	DK227			
APRILIA	HABANA CUSTOM	50	1999	→	68B40717	DK227			
APRILIA	MC GULLIVER	50	1995	→	68B40717	DK227			
APRILIA	MOJITO	50	2004	2008	68B40717	DK227			
APRILIA	MOJITO CUSTOM	50	1999	2003	68B40717	DK227			
APRILIA	MOJITO RETRO	50	1999	2003	68B40717	DK227			
APRILIA	RALLY	50	1992	1996	68B40717	DK227			
APRILIA	RALLY	50	1997	→	68B40717	DK227			
APRILIA	RALLY AC	50	1996	→	68B40717	DK227			
APRILIA	RALLY LC	50	1992	1996	68B40717	DK227			
APRILIA	RALLY LC	50	1997	→	68B40717	DK227			
APRILIA	RS	50	1999	2005					
APRILIA	SCARABEO	50	1994	1997	68B40736	DK152			
APRILIA	SCARABEO	50	1998	2005	68B40732	DK037			
APRILIA	SCARABEO 4T	50	2002	2009	68B40732	DK037			
APRILIA	SCARABEO 4T RESTYLING	50	2006	2008	68B40732	DK037			
APRILIA	SCARABEO 4V4T	50	2013	→	68B40732	DK037			
APRILIA	SCARABEO BRIGHT	50	1998	→	68B40732	DK037			
APRILIA	SCARABEO DE LUXE	50	1998	→	68B40732	DK037			
APRILIA	SCARABEO DITECH	50	2002	2004	68B40732	DK037			
APRILIA	SCARABEO DITECH	50	2005	→	68B40732	DK037			
APRILIA	SCARABEO STREET	50	1998	→	68B40732	DK037			
APRILIA	SPORTCITY ONE 2T/4T	50	2008	→	68B40730	DK010			
APRILIA	SPORTCITY ONE STREET	50	2009	→	68B40730	DK010			
APRILIA	SR CAPIROSSI	50	1998	→	68B40717	DK227			
APRILIA	SR DITECH	50	2000	2006	68B40717	DK227			
APRILIA	SR EUROPA	50	1993	→	68B40717	DK227			
APRILIA	SR LC	50	1994	1996	68B40717	DK227			
APRILIA	SR PUREJET	50	2003	2005	68B40717	DK227			
APRILIA	SR R	50	2005	→	68B40717	DK227			
APRILIA	SR R FACTORY	50	2003	2004	68B40717	DK227			
APRILIA	SR R FACTORY	50	2005	2008	68B40719	DK151			
APRILIA	SR R FACTORY	50	2009	→	68B40717	DK227			
APRILIA	SR R FACTORY REPLICA SBK	50	2010	→	68B40717	DK227			
APRILIA	SR RACING	50	1997	2000	68B40717	DK227			
APRILIA	SR STEALTH LC	50	1997	2000	68B40717	DK227			
APRILIA	SR STREET	50	2003	2012	68B40719	DK151			
APRILIA	SR URBAN KID	50	1993	→	68B40717	DK227			
APRILIA	SR VIPER REPLICA	50	1994	→	68B40717	DK227			
APRILIA	TUONO	50	2003	2004					
APRILIA	VIPER-REPLICA	50	1994	→	68B40717	DK227			
APRILIA	SCARABEO	70	1994	1998	68B40736	DK152			
APRILIA	SCARABEO	100	1999	→	68B40732	DK037			
APRILIA	AF-1 FUTURA	125	1990	1992			78B40870	DK022	
APRILIA	ATLANTIC	125	2003	2011	68B40798	DK064			
APRILIA	HABANA	125	1999	→	68B40717	DK227			
APRILIA	HABANA CUSTOM	125	2000	→	68B40717	DK227			
APRILIA	HABANA DITECH	125	2002	→	68B40717	DK227			
APRILIA	LEONARDO	125	1995	2002	68B40732	DK037			
APRILIA	LEONARDO ST	125	2003	→	68B40732	DK037			
APRILIA	MOJITO	125	2003	2008	68B40717	DK227			

ACCOSSATO

dischi freno brake rotor

INDICE ANALITICO / index

	DK: POSTERIORE / Rear				DISCO S. SPORT BREMBO	DKS OEM ANTERIORE Front	DKR ANTERIORE Front
	FISSO / Fix		FLOTTANTE / Floating				
	BREMBO	ACCOSSATO	BREMBO	ACCOSSATO			
				ADIVA			
	68B40776	DK091					
				APRILIA			
	68B40717	DK227					
	68B40717	DK227					
	68B40717	DK227					
	68B407G2	DK219					
	68B40717	DK227					
	68B40717	DK227					
	68B40717	DK227					
	68B40717	DK227					
	68B40717	DK227					
	68B40717	DK227					
	68B40717	DK227					
	68B40719	DK151					
	68B40717	DK227					
	68B40717	DK227					
	68B40717	DK227					
	68B40717	DK227					
	68B40717	DK227					
	68B40717	DK227					
	68B40717	DK227					
	68B40717	DK227					
	68B40717	DK227					
	68B40717	DK227					
	68B407G2	DK219					
	68B40719	DK151					
	68B40717	DK227					
	68B40717	DK227					

dischi freno brake rotor

INDICE ANALITICO / index

MARCA / Brand	MODELLO / Model	CC	DA From	A To	DK: ANTERIORE / Front			
					FISSO / Fix		FLOTTANTE / Floating	
					BREMBO	ACCOSSATO	BREMBO	ACCOSSATO
APRILIA	MOJITO CUSTOM	125	1999	2001	68B40717	DK227		
APRILIA	MOJITO RETRO	125	1999	2001	68B40717	DK227		
APRILIA	MX	125	2004	2007			78B40870	DK022
APRILIA	PEGASO	125	1989	1999	68B407G5	DK100		
APRILIA	RS EXTREMA	125	1989	1991			78B40870	DK022
APRILIA	RS EXTREMA	125	1992	1997			78B40870	DK022
APRILIA	RS REPLICA	125	1992	1997			78B40870	DK022
APRILIA	SCARABEO	125	1998	1998	68B40736	DK152		
APRILIA	SCARABEO	125	1999	2003	68B407B0	DK002		
APRILIA	SCARABEO	125	2004	2007	68B407B0	DK002		
APRILIA	SCARABEO GT	125	1999	2003	68B407B0	DK002		
APRILIA	SCARABEO I.E.	125	2008	→	68B407B0	DK002		
APRILIA	SPORT PRODUCTION	125	1992	→			78B40870	DK022
APRILIA	SPORTCITY	125	2005	2005	68B407B0	DK002		
APRILIA	SPORTCITY	125	2006	2007	68B407B0	DK002		
APRILIA	SPORTCITY CUBE	125	2009	→	68B407B0	DK002		
APRILIA	SPORTCITY ONE	125	2011	→	68B40730	DK010		
APRILIA	SPORTCITY STREET	125	2012	2012	68B407B0	DK002		
APRILIA	SR	125	1999	2003	68B40717	DK227		
APRILIA	SR REPLICA	125	1999	2001	68B407B6	DK092		
APRILIA	SR REPLICA	125	1999	2001	68B40717	DK227		
APRILIA	SR MAX	125	2010	→	68B407B6	DK092		
APRILIA	TUAREG RALLY	125	1989	1992	68B40753	DK159		
APRILIA	TUONO	125	2004	2005			78B40870	DK022
APRILIA	LEONARDO	150	1996	1998	68B40732	DK037		
APRILIA	LEONARDO ST	150	1999	2002	68B40732	DK037		
APRILIA	MOJITO	150	2003	2007	68B40717	DK227		
APRILIA	SCARABEO	150	1998	1998	68B40736	DK152		
APRILIA	SCARABEO	150	1999	2003	68B407B0	DK002		
APRILIA	SR	150	1999	2003	68B40717	DK227		
APRILIA	SR REPLICA	150	1999	→	68B40717	DK227		
APRILIA	ATLANTIC	200	2003	2004	68B40798	DK064		
APRILIA	SCARABEO GT	200	2001	2006	68B407B0	DK002		
APRILIA	SCARABEO I.E.	200	2007	→	68B407B0	DK002		
APRILIA	SCARABEO LIGHT	200	2007	→	68B407B0	DK002		
APRILIA	SPORTCITY	200	2004	2008	68B407B0	DK002		
APRILIA	SPORTCITY CUBE	200	2008	2010	68B407B0	DK002		
APRILIA	ATLANTIC	250	2004	2006	68B40798	DK064		
APRILIA	LEONARDO	250	1999	2004	68B40732	DK037		
APRILIA	RS	250	1994	→				
APRILIA	SCARABEO	250	2004	2005	68B407B0	DK002		
APRILIA	SCARABEO	250	2010	→	68B407B0	DK002		
APRILIA	SCARABEO I.E.	250	2006	2009	68B407B0	DK002		
APRILIA	SCARABEO LIGHT	250	2006	2008	68B407B0	DK002		
APRILIA	SPORTCITY	250	2006	2008	68B407B0	DK002		
APRILIA	SPORTCITY CUBE	250	2008	2012	68B407B0	DK002		
APRILIA	ATLANTIC	300	2010	2011	68B40798	DK064		
APRILIA	LEONARDO ST	300	2005	2006	68B40732	DK037		
APRILIA	SCARABEO I.E.	300	2009	→	68B407B0	DK002		
APRILIA	SCARABEO LIGHT	300	2006	2010	68B407B0	DK002		
APRILIA	SCARABEO SPECIAL	300	2009	→	68B407B0	DK002		
APRILIA	SPORTCITY CUBE	300	2008	→	68B407B0	DK002		
APRILIA	ATLANTIC SPRINT	400	2006	→	68B407B0	DK002		
APRILIA	SCARABEO I.E.	400	2006	→	68B407B0	DK002		
APRILIA	SCARABEO LIGHT	400	2007	→	68B407B0	DK002		
APRILIA	SCARABEO URBAN	400	2006	2008	68B407B0	DK002		
APRILIA	ATLANTIC	500	2001	2005	68B407B0	DK002		
APRILIA	ATLANTIC SPRINT	500	2005	2005	68B407B0	DK002		
APRILIA	ATLANTIC SPRINT	500	2006	2008	68B407B0	DK002		
APRILIA	SCARABEO	500	2003	2006	68B407B0	DK002		
APRILIA	SCARABEO CLASSIC	500	2010	→	68B407B0	DK002		

ACCOSSATO

dischi freno brake rotor

INDICE ANALITICO / index

	DK: POSTERIORE / Rear				DISCO S. SPORT BREMBO	DKS OEM ANTERIORE Front	DKR ANTERIORE Front
	FISSO / Fix		FLOTTANTE / Floating				
	BREMBO	ACCOSSATO	BREMBO	ACCOSSATO			
	68B40753	DK159					
	68B40753	DK159					
	68B40753	DK159					
	68B40753	DK159					
	68B40753	DK159					
	68B40732	DK037					
	68B40798	DK064					
	68B40732	DK037					
	68B40732	DK037					
	68B40732	DK037					
	68B40732	DK037					
	68B40717	DK227					
	68B40777	DK163					
	68B40717	DK227					
	68B40717	DK227					
	68B407G2	DK219					
	68B40717	DK227					
	68B40732	DK037					
	68B40732	DK037					
	68B40717	DK227					
	68B40717	DK227					
	68B40719	DK151					
	68B40732	DK037					
	68B407G2	DK219					
	68B407G2	DK219					
	68B40732	DK037					
	68B40732	DK037					
	68B40719	DK151					
	68B40736	DK152					
	68B407G2	DK219					
	68B40777	DK163					
	68B40777	DK163					
	68B40732	DK037					
	68B40732	DK037					
	68B40719	DK151					
	68B40717	DK227					
	68B40777	DK163					
	68B40777	DK163					
	68B40732	DK037					
	68B40719	DK151					
	68B40777	DK163					
	68B407G2	DK219					
	68B40777	DK163					
	68B40736	DK152					
	68B40719	DK151					
	68B40736	DK152					
	68B40736	DK152					
	68B40777	DK163					

dischi freno brake rotor

INDICE ANALITICO / index

MARCA / Brand	MODELLO / Model	CC	DA From	A To	DK: ANTERIORE / Front			
					FISSO / Fix		FLOTTANTE / Floating	
					BREMBO	ACCOSSATO	BREMBO	ACCOSSATO
APRILIA	SCARABEO GT ABS	500	2006	→	68B407B0	DK002		
APRILIA	SCARABEO I.E.	500	2006	→	68B407B0	DK002		
APRILIA	SCARABEO LIGHT	500	2007	→	68B407B0	DK002		
APRILIA	SCARABEO URBAN	500	2006	2011	68B407B0	DK002		
APRILIA	PEGASO	600	1989	1991	68B407G5	DK100		
APRILIA	CUBE	650	1993	2000				
APRILIA	CUBE	650	2001	→				
APRILIA	PEGASO	650	1991	1992	68B407G5	DK100		
APRILIA	PEGASO	650	1993	2000	68B407G5	DK100		
APRILIA	PEGASO FACTORY	650	2007	2009			78B40870	DK022
APRILIA	PEGASO I.E.	650	2001	2004	68B407G5	DK100		
APRILIA	PEGASO STRADA	650	2005	2009			78B40870	DK022
APRILIA	PEGASO TRAIL	650	2005	2008	68B407G5	DK100		
APRILIA	DORSODURO	750	2008	→			78B40870	DK022
APRILIA	DORSODURO ABS	750	2008	→			78B40870	DK022
APRILIA	DORSODURO FACTORY	750	2010	→			78B40870	DK022
APRILIA	SHIVER	750	2007	→			78B40870	DK022
APRILIA	SHIVER-GT-ABS	750	2009	→			78B40870	DK022
APRILIA	SHIVER-SL	750	2007	2009			78B40870	DK022
APRILIA	MANA	850	2007	2011			78B40870	DK022
APRILIA	MANA-GT	850	2009	2013			78B40870	DK022
APRILIA	RSV	1000	1998	2000			78B40870	DK022
APRILIA	RSV	1000	2001	2003			78B40870	DK022
APRILIA	RSV4-FACTORY	1000	2009	2011			78B40870	DK022
APRILIA	RSV4-FACTORY-APRC	1000	2011	2012			78B40870	DK022
APRILIA	RSV4-FACTORY-APRC-ABS	1000	2013	→			78B40870	DK022
APRILIA	RSV4-R	1000	2010	2010			78B40870	DK022
APRILIA	RSV4-RF	1000	2015	→			78B40870	DK022
APRILIA	RSV4-RR	1000	2015	→			78B40870	DK022
APRILIA	RSV4-FACTORY	1000	2009	2011			78B40870	DK022
APRILIA	RSV-R	1000	2000	2008			78B40870	DK022
APRILIA	RSV-SP	1000	1999	2000			78B40870	DK022
APRILIA	SL-FALCO	1000	2000	2004			78B40870	DK022
APRILIA	TUONO	1000	2003	→			78B40870	DK022
APRILIA	TUONO-FIGHTER	1000	2002	2005			78B40870	DK022
APRILIA	TUONO-R	1000	2003	2009			78B40870	DK022
APRILIA	TUONO-RACING	1000	2004	2005			78B40870	DK022
APRILIA	TUONO-V4-FACTORY	1000	2015	→			78B40870	DK022
APRILIA	TUONO-V4-FACTORY-RR	1000	2015	→			78B40870	DK022
APRILIA	TUONO-V4R	1000	2011	→			78B40870	DK022
APRILIA	TUONO-V4R-APRC	1000	2011	→			78B40870	DK022
APRILIA	TUONO-V4R-APRC-ABS	1000	2014	→			78B40870	DK022
APRILIA	CAPONORD	1200	2013	→			78B40870	DK022
APRILIA	CAPONORD-ABS	1200	2013	→			78B40870	DK022
APRILIA	CAPONORD-RALLY	1200	2015	→			78B40870	DK022
APRILIA	DORSODURO	1200	2011	→			78B40870	DK022
ATALA								
ATALA	CAROSELLO-AT-15	50	1997	→	68B40736	DK152		
AXY								
AXY	GULP	125	2008	→	68B40740	DK014		
AXY	YUK	125	2007	→	68B40740	DK014		
AXY	GULP	150	2008	→	68B40740	DK014		
AXY	YUK	150	2007	→	68B40740	DK014		
AXY	GULP	200	2008	→	68B40740	DK014		
AXY	YUK	200	2007	→	68B40740	DK014		
AXY	ROAR	300	2008	→	68B40740	DK014		
BENELLI								
BENELLI	VELVET	125	1999	2004				
BENELLI	VELVET-TOURING	125	2001	→				
BENELLI	VELVET	150	2000	2004				
BENELLI	VELVET-TOURING	150	2001	→				

	DK: POSTERIORE / Rear				DISCO S. SPORT BREMBO	DKS OEM ANTERIORE Front	DKR ANTERIORE Front
	FISSO / Fix		FLOTTANTE / Floating				
	BREMBO	ACCOSSATO	BREMBO	ACCOSSATO			
	68B40777	DK163					
	68B40777	DK163					
	68B40776	DK091					
	68B40777	DK163					
	68B40753	DK159					
	68B40753	DK159					
	68B40781	DK165					
	68B40753	DK159					
	68B40753	DK159					
	68B40781	DK165					
	68B40781	DK165					
	68B40760	DK161					
	68B40781	DK165					
	68B40760	DK161					
	68B40760	DK161					
	68B40760	DK161					
	68B40760	DK161					
	68B40760	DK161					
	68B407G6	DK184			208973725	DKS003	DKR004
	68B407G6	DK184			208973725	DKS003	DKR004
	68B407G6	DK184			208973725	DKS003	
	68B407G6	DK184			208973725	DKS003	
	68B407G6	DK184			208973725	DKS003	
	68B407G6	DK184			208973725	DKS003	
	68B407G6	DK184			208973725	DKS003	
	68B407G6	DK184			208973725	DKS003	
	68B407G6	DK184			208973725	DKS003	
	68B407G6	DK184			208973725	DKS003	DKR004
	68B407G6	DK184			208973725	DKS003	
	68B407G6	DK184			208973725	DKS003	
	68B407G6	DK184			208973725	DKS003	
	68B407G6	DK184			208973725	DKS003	
	68B407G6	DK184			208973725	DKS003	
	68B407G6	DK184			208973725	DKS003	
	68B407G6	DK184			208973725	DKS003	
	68B407G6	DK184			208973725	DKS003	
	68B407G6	DK184			208973725	DKS003	
	68B407G6	DK184			208973725	DKS003	
	68B407G6	DK184			208973725	DKS003	
	68B407G6	DK184			208973725	DKS003	
	68B407G6	DK184					
	68B40760	DK161					
ATALA							
AXY							
	68B40740	DK014					
	68B40740	DK014					
	68B40740	DK014					
	68B40740	DK014					
	68B40740	DK014					
	68B40740	DK014					
	68B40740	DK014					
BENELLI							
	68B40735	DK211					
	68B40735	DK211					
	68B40735	DK211					
	68B40735	DK211					

dischi freno brake rotor

INDICE ANALITICO / index

MARCA / Brand	MODELLO / Model	CC	DA From	A To	DK: ANTERIORE / Front			
					FISSO / Fix		FLOTTANTE / Floating	
					BREMBO	ACCOSSATO	BREMBO	ACCOSSATO
BENELLI	VELVET	250	1999	→	68B40798	DK064		
BENELLI	VELVET-TOURING	250	2001	→	68B40798	DK064		
BENELLI	BN-302	300	2014	→			78B40870	DK022
BENELLI	VELVET	400	2003	→	68B40798	DK064		
BENELLI	BN	600	2014	→			78B40870	DK022
BENELLI	BN-GT	600	2014	→			78B40870	DK022
BENELLI	TNT-CENTURY-RACER	899	2011	→			78B40870	DK022
BENELLI	TRE-899-K	899	2011	→			78B40870	DK022
BENELLI	TORNADO-3-BIPOSTO	900	2002	2003			78B40870	DK022
BENELLI	TORNADO-3-L.E.	900	2003	2006			78B40870	DK022
BENELLI	TORNADO-3-RS	900	2004	2006			78B40870	DK022
BENELLI	TNT	1130	2004	→			78B40870	DK022
BENELLI	TNT	1130	2005	2006			78B40870	DK022
BENELLI	TNT-CAFE'-RACER	1130	2005	2007			78B40870	DK022
BENELLI	TNT-CAFE'-RACER	1130	2011	→				
BENELLI	TNT-CENTURY-RACER	1130	2011	→			78B40870	DK022
BENELLI	TNT-R-160	1130	2011	→			78B40870	DK022
BENELLI	TNT-RS	1130	2005	2006			78B40870	DK022
BENELLI	TNT-SPORT	1130	2005	→			78B40870	DK022
BENELLI	TNT-TITANIUM	1130	2005	2007			78B40870	DK022
BENELLI	TORNADO-TRE	1130	2006	→			78B40870	DK022
BENELLI	TORNADO-TRE-R	1130	2013	→			78B40870	DK022
BENELLI	TRE-K	1130	2006	2007			78B40870	DK022
BENELLI	TRE-K	1130	2011	→			78B40870	DK022
BENELLI	TRE-K-AMAZONAS	1130	2013	→			78B40870	DK022
BETA								
BETA	ARK	50	1999	→	68B40717	DK227		
BETA	TEMPO-"16"	50	2000	→	68B40738	DK025		
BETA	EIKON	125	2000	→	68B40730	DK010		
BETA	EIKON	150	2000	→	68B40730	DK010		
BETA	RR	250	2005	2009			78B40814	DK112
BETA	RR	250	2013	→	68B407B8	DK017		
BETA	RR	300	2013	→	68B407B8	DK017		
BETA	RR	350	2011	2012			78B40814	DK112
BETA	RR	350	2013	→	68B407B8	DK017		
BETA	RR	400	2005	2012			78B40814	DK112
BETA	RR	400	2013	→	68B407B8	DK017		
BETA	RR-ENDURO	400	2005	2012			78B40814	DK112
BETA	RR	450	2005	2012			78B40814	DK112
BETA	RR	450	2013	→	68B407B8	DK017		
BETA	RR	498	2012	→			78B40814	DK112
BETA	RR	498	2013	→	68B407B8	DK017		
BETA	RR	520	2010	2011			78B40814	DK112
BETA	RR	525	2005	2009			78B40814	DK112
BIMOTA								
BIMOTA	YB-7	400	1989	→			78B40870	DK022
BIMOTA	V-DUE	500	1997	2000			78B40870	DK022
BIMOTA	BB1-SUPERMONO	650	1996	2000			78B40870	DK022
BIMOTA	TESI	851	1990	1991			78B40870	DK022
BIMOTA	DB2-SR	904	1993	2000			78B40870	DK022
BIMOTA	DB3-MANTRA	904	1995	2000			78B40870	DK022
BIMOTA	DB4	904	1998	1999			78B40870	DK022
BIMOTA	BB3	1000	2014	→				
BIMOTA	DB5	1000	2005	→			78B40870	DK022
BIMOTA	DB6-R-DELIRIO	1000	2006	→			78B40870	DK022
BIMOTA	DIECI-BIPOSTO	1000	1992	1995			78B40870	DK022
BIMOTA	SB6	1100	1996	2000			78B40870	DK022
BIMOTA	SB6R	1100	1998	2000			78B40870	DK022
BIMOTA	SB8-K-GOBERT	1000	2004	2006			78B40870	DK022
BIMOTA	SB8K-SANTAMONICA	1100	2004	→			78B40870	DK022
BIMOTA	SB8-R	1000	1997	2000			78B40870	DK022

ACCOSSATO

dischi freno brake rotor

INDICE ANALITICO / index

	DK: POSTERIORE / Rear				DISCO S. SPORT BREMBO	DKS OEM ANTERIORE Front	DKR ANTERIORE Front
	FISSO / Fix		FLOTTANTE / Floating				
	BREMBO	ACCOSSATO	BREMBO	ACCOSSATO			
	68B40735	DK211					
	68B40735	DK211					
	68B40781	DK165					
	68B40781	DK165					
	68B40781	DK165					
	68B40781	DK165			208973710	DKS004	
	68B40781	DK165			208973710	DKS004	
					208973710	DKS004	
	68B407G6	DK184			208973710	DKS004	
	68B407G6	DK184			208973710	DKS004	
	68B40781	DK165			208973710	DKS004	
	68B40781	DK165			208973710	DKS004	
	68B40781	DK165			208973710	DKS004	
					208973710	DKS004	
	68B40781	DK165			208973710	DKS004	
	68B40781	DK165			208973710	DKS004	
	68B40781	DK165			208973710	DKS004	
	68B40781	DK165			208973710	DKS004	
	68B40781	DK165			208973710	DKS004	
	68B40781	DK165			208973710	DKS004	
	68B40781	DK165			208973710	DKS004	
	68B40781	DK165			208973710	DKS004	
	68B40781	DK165			208973710	DKS004	
BETA							
	68B40789	DK167					
	68B407F0	DK179					
	68B407F0	DK179					
	68B40789	DK167					
	68B407F0	DK179					
	68B40789	DK167					
	68B407F0	DK179					
	68B40789	DK167					
	68B40789	DK167					
	68B407F0	DK179					
	68B40789	DK167					
	68B407F0	DK179					
	68B40789	DK167					
	68B40789	DK167					
BIMOTA							
					208973710	DKS004	

dischi freno brake rotor

INDICE ANALITICO / index

MARCA / Brand	MODELLO / Model	CC	DA From	A To	DK: ANTERIORE / Front			
					FISSO / Fix		FLOTTANTE / Floating	
					BREMBO	ACCOSSATO	BREMBO	ACCOSSATO
BMW								
BMW	C-1	125	1999	→	68B407G2	DK099		
BMW	C-1-EXECUTIVE	125	2000	→	68B407G2	DK099		
BMW	C-1-FRIENDS	125	2001	→	68B407G2	DK099		
BMW	C-1	200	2001	→	68B407G2	DK099		
BMW	C-1-EXECUTIVE	200	2001	→	68B407G2	DK099		
BMW	C-1-FRIENDS	200	2001	→	68B407G2	DK099		
BMW	R-45	450	1978	1986			178B40836	DK108
BMW	F-650	650	1993	2001	68B407G5	DK100	78B40896	DK143
BMW	F-650-CS	650	2002	2007	68B407G5	DK100	78B40896	DK143
BMW	F-650-DAKAR	650	2000	2002				
BMW	F-650-FL	650	1993	2000	68B407G5	DK100	78B40896	DK143
BMW	F-650-GS	650	2000	2007	68B407G5	DK100	78B40896	DK143
BMW	F-650-GS	650	2008	→	68B407G5	DK100	78B40896	DK143
BMW	F-650-GS-ABS	650	2000	2007	68B407G5	DK100	78B40896	DK143
BMW	F-650-GS-ABS	650	2008	→	68B407G5	DK100	78B40896	DK143
BMW	F-650-ST	650	1997	2001	68B407G5	DK100	78B40896	DK143
BMW	G-650-GS	650	2009	→	68B407G5	DK100	78B40896	DK143
BMW	G-650-XCHALLENGE	650	2007	2009	68B407G5	DK100	78B40896	DK143
BMW	G-650-XCOUNTRY	650	2007	2009	68B407G5	DK100	78B40896	DK143
BMW	G-650-XMOTO	650	2007	2009			78B40870	DK022
BMW	R-65	650	1978	1980			178B40836	DK108
BMW	R-65-GS	650	1987	1992			178B40836	DK108
BMW	R-65-RT	650	1985	1995			78B40892	DK140
BMW	F-700-GS	700	2013	→			78B40896	DK143
BMW	K-75	750	1984	1996	68B407D2	DK095		
BMW	K-75-C	750	1985	1991	68B407D2	DK095		
BMW	K-75-RT	750	1990	1996	68B407D2	DK095		
BMW	K-75-S	750	1985	1988	68B407D2	DK095		
BMW	K-75-S	750	1989	1992	68B407D2	DK095		
BMW	K-75-S	750	1993	1996	68B407D2	DK095		
BMW	F-800-ABS	800	2004	2007	68B407D7	DK007		
BMW	F-800-ABS	800	2008	2013	168B407D7	DK045		
BMW	F-800-GS	800	2009	→			78B40896	DK143
BMW	F-800-GS-ADVENTURE	800	2014	→			78B40896	DK143
BMW	F-800-GT	800	2013	→	168B407D7	DK045		
BMW	F-800-R	800	2009	2011	168B407D7	DK045		
BMW	F-800-S	800	2006	2007	68B407D7	DK007		
BMW	F-800-S	800	2008	2010	168B407D7	DK045		
BMW	F-800-ST	800	2006	2007	68B407D7	DK007		
BMW	F-800-ST	800	2008	2012				
BMW	R-80	800	1981	1995			78B40892	DK140
BMW	R-80-GS	800	1987	1987			78B40816	DK113
BMW	R-80-GS	800	1988	1990			178B40836	DK108
BMW	R-80-PD	800	1991	1995			78B40816	DK113
BMW	R-80-R	800	1991	1995			78B40892	DK140
BMW	R-80-RT	800	1983	1995			78B40892	DK140
BMW	R-80-ST	800	1980	1992			178B40836	DK108
BMW	R-850-C	850	1998	2001	68B407D6	DK006		
BMW	R-850-GS	850	1998	2007	68B407D6	DK006		
BMW	R-850-R	850	1994	2001			78B40846	DK124
BMW	R-850-R	850	1995	2000				
BMW	R-850-R	850	2002	2007	68B407D6	DK006		
BMW	R-850-ROADSTER	850	1995	2000				
BMW	R-850-RT	850	1995	2001			78B40846	DK124
BMW	R-850-RT	850	2002	2004	68B407D7	DK007		
BMW	R-850-RT-ABS	850	1995	2001				
BMW	K-1	1000	1989	1993			78B40846	DK124
BMW	K-100	1000	1983	1989	68B407D2	DK095		
BMW	K-100-LT-ABS	1000	1990	1991	68B407D2	DK095		
BMW	K-100-RS	1000	1983	1991	68B407D2	DK095		

ACCOSSATO

dischi freno brake rotor

INDICE ANALITICO / index

	DK: POSTERIORE / Rear				DISCO S. SPORT BREMBO	DKS OEM ANTERIORE Front	DKR ANTERIORE Front
	FISSO / Fix		FLOTTANTE / Floating				
	BREMBO	ACCOSSATO	BREMBO	ACCOSSATO			
				BMW			
	68B40781	DK165					
	68B40781	DK165					
	68B40781	DK165					
	68B40781	DK165					
	68B40781	DK165					
	68B407C0	DK004					
	68B40781	DK165					
	68B40781	DK165					
	68B40781	DK165					
	68B40781	DK165					
	68B40774	DK090					
	68B40774	DK090					
	68B40781	DK165					
	68B407C0	DK004					
	68B407D3	DK175					
	68B407D3	DK175					
	68B407D3	DK175					
	68B407D3	DK175					
	68B407C0	DK004					
	68B407C0	DK004					
	68B407C0	DK004					
	68B407C0	DK004					
	68B407C0	DK004					
	68B407C0	DK004					
	68B407C0	DK004					
	68B407C0	DK004					
	68B407C8	DK005					
	68B407C8	DK005					
	68B407C8	DK005					
	68B407C8	DK005					
	68B407C8	DK005					
	68B407C8	DK005					
	68B407C8	DK005					
	68B407C8	DK005					
	68B407C8	DK005					
	68B407D3	DK175					
	68B407D3	DK175					
	68B407D3	DK175					
	68B407D3	DK175					

dischi freno brake rotor

INDICE ANALITICO / index

MARCA / Brand	MODELLO / Model	CC	DA From	A To	DK: ANTERIORE / Front			
					FISSO / Fix		FLOTTANTE / Floating	
					BREMBO	ACCOSSATO	BREMBO	ACCOSSATO
BMW	K-100-RS-16V	1000	1989	1993			78B40846	DK124
BMW	K-100-RT	1000	1984	1989	68B407D2	DK095		
BMW	R-100-GS	1000	1987	1995			78B40892	DK140
BMW	R-100-PD	1000	1991	1995			78B40892	DK140
BMW	R-100-R	1000	1991	1996			78B40816	DK113
BMW	R-100-RS	1000	1985	1995			78B40816	DK113
BMW	R-100-RT	1000	1985	1995			78B40816	DK113
BMW	S-1000-R	1000	2014	→	168B407D7	DK045		
BMW	S-1000-RR	1000	2009	→	168B407D7	DK045		
BMW	S-1000-RR-HP4	1000	2013	→				
BMW	S-1000-XR	1000	2015	→	168B407D7	DK045		
BMW	K-1100-LT-(noABS)	1100	1993	2000			78B40846	DK124
BMW	K-1100-RS	1100	1993	1999			78B40846	DK124
BMW	R-1100-GS	1100	1994	2001	68B407D6	DK006		
BMW	R-1100-R	1100	1995	2001			78B40846	DK124
BMW	R-1100-R-ROADSTER	1100	1995	2001			78B40846	DK124
BMW	R-1100-RS	1100	1985	1993			78B40846	DK124
BMW	R-1100-RS	1100	1994	2001			78B40846	DK124
BMW	R-1100-RT	1100	1994	2001			78B40846	DK124
BMW	R-1100-RT-ABS	1100	1994	2001			78B40846	DK124
BMW	R-1100-S	1100	1998	2000	68B407D6	DK006		
BMW	R-1100-S	1100	2001	2006	68B407D7	DK007		
BMW	R-1100-S-BOXER	1100	2003	2006	68B407D7	DK007		
BMW	R-1150-GS	1150	1999	2004	68B407D6	DK006		
BMW	R-1150-GS-ADVENTURE	1150	2002	2005	68B407D6	DK006		
BMW	R-1150-R	1150	2001	2006	68B407D7	DK007		
BMW	R-1150-R-ROCKSTER	1150	2003	2006	68B407D7	DK007		
BMW	R-1150-RS	1150	2001	2005	68B407D7	DK007		
BMW	R-1150-RT	1150	2001	2005	68B407D7	DK007		
BMW	R-1150-RT-ABS	1150	2001	2005	68B407D7	DK007		
BMW	HP2-ENDURO	1200	2006	2009	68B407D6	DK006		
BMW	HP2-MEGAMOTO	1200	2007	2007	68B407D7	DK007		
BMW	HP2-MEGAMOTO	1200	2008	2010	168B407D7	DK045		
BMW	HP2-SPORT	1200	2008	2011	168B407D7	DK045		
BMW	K-1200-GT	1200	2002	2007	68B407D7	DK007		
BMW	K-1200-GT	1200	2008	→	168B407D7	DK045		
BMW	K-1200-LT	1200	1999	2001	68B407D6	DK006		
BMW	K-1200-LT	1200	2002	→	68B407D7	DK007		
BMW	K-1200-R	1200	2005	2008	68B407D7	DK007		
BMW	K-1200-RS	1200	1997	2000	68B407D6	DK006		
BMW	K-1200-RS	1200	2001	2006	68B407D7	DK007		
BMW	K-1200-R-SPORT	1200	2007	→	68B407D7	DK007		
BMW	K-1200-S	1200	2005	2007	68B407D7	DK007		
BMW	K-1200-S	1200	2008	→	168B407D7	DK045		
BMW	K-1200-S-ABS	1200	2005	2007	68B407D7	DK007		
BMW	K-1200-S-ABS	1200	2008	→	168B407D7	DK045		
BMW	R-1200-C	1200	1997	2001	68B407D6	DK006		
BMW	R-1200-C-CLASSIC	1200	2003	→	68B407D6	DK006		
BMW	R-1200-CL	1200	2002	2006	68B407D6	DK006		
BMW	R-1200-CRUISER	1200	1997	2001	68B407D6	DK006		
BMW	R-1200-GS	1200	2004	2007				
BMW	R-1200-GS	1200	2008	2012	168B407D6	DK088		
BMW	R-1200-GS	1200	2013	→	168B407D6	DK088		
BMW	R-1200-GS-ABS	1200	2004	2007				
BMW	R-1200-GS-ABS	1200	2008	2012	168B407D6	DK088		
BMW	R-1200-GS-ABS	1200	2013	→	168B407D6	DK088		
BMW	R-1200-GS-ADVENTURE	1200	2006	2007	68B407D6	DK006		
BMW	R-1200-GS-ADVENTURE	1200	2008	2012	168B407D6	DK088		
BMW	R-1200-GS-ADVENTURE	1200	2014	→	168B407D6	DK088		
BMW	R-1200-R	1200	2006	2007	68B407D7	DK007		
BMW	R-1200-R	1200	2008	2012	168B407D7	DK045		

ACCOSSATO

dischi freno brake rotor

INDICE ANALITICO / index

	DK: POSTERIORE / Rear				DISCO S. SPORT BREMBO	DKS OEM ANTERIORE Front	DKR ANTERIORE Front
	FISSO / Fix		FLOTTANTE / Floating				
	BREMBO	ACCOSSATO	BREMBO	ACCOSSATO			
	68B407D3	DK175					
	68B407D3	DK175					
	68B407C8	DK005					
	68B407F2	DK181			208973751	DKS002	
	68B407F2	DK181			208973751	DKS002	
	68B407F2	DK181					
	68B407C0	DK004					
	68B407D3	DK175					
	68B407C8	DK005					
	68B407C8	DK005					
	68B407C8	DK005					
	68B407C8	DK005					
	68B407C8	DK005					
	68B407C8	DK005					
	68B407C8	DK005					
	68B407C8	DK005					
	68B407C8	DK005					
	68B407C8	DK005					
	68B407C8	DK005					
	68B407C8	DK005					
	68B407C8	DK005					
	68B407C8	DK005					
	68B407C8	DK005					
	68B407C8	DK005					
	68B407C0	DK004					
	68B407C0	DK004					
	68B407C0	DK004					
	68B407C0	DK004					
	68B407C0	DK004					
	68B407C0	DK004					
	68B407C0	DK004					
	68B407C0	DK004					
	68B407C0	DK004					
	68B407C0	DK004					
	68B407G9	DK186					
	68B407C0	DK004					
	68B407C0	DK004					
	68B407G9	DK186					
	68B407C0	DK004					
	68B407C0	DK004					
	68B407G9	DK186					
	68B407C0	DK004					
	68B407C0	DK004					

dischi freno brake rotor

INDICE ANALITICO / index

MARCA / Brand	MODELLO / Model	CC	DA From	A To	DK: ANTERIORE / Front				
					FISSO / Fix		FLOTTANTE / Floating		
					BREMBO	ACCOSSATO	BREMBO	ACCOSSATO	
BMW	R-1200-R	1200	2015	→	168B407D7	DK045			
BMW	R-1200-R-DARK-WHITE	1200	2014	→	168B407D6	DK088			
BMW	R-1200-RS	1200	2015	→	168B407D7	DK045			
BMW	R-1200-RT	1200	2005	2007	68B407D7	DK007			
BMW	R-1200-RT	1200	2008	2012	168B407D7	DK045			
BMW	R-1200-RT	1200	2014	→	168B407D7	DK045			
BMW	R-1200-S	1200	2006	2007	68B407D7	DK007			
BMW	R-1200-S	1200	2008	→	168B407D7	DK045			
BMW	R-1200-ST	1200	2005	2007	68B407D7	DK007			
BMW	R-1200-ST	1200	2008	→	168B407D7	DK045			
BMW	R-NINE-T	1200	2014	→	168B407D7	DK045			
BMW	K-1300-GT	1300	2009	2010	168B407D7	DK045			
BMW	K-1300-R	1300	2008	2013	168B407D7	DK045			
BMW	K-1300-S	1300	2009	2012	168B407D7	DK045			
BMW	K-1300-S	1300	2015	→	168B407D7	DK045			
BMW	K-1600-GT	1600	2011	2012	168B407D7	DK045			
BMW	K-1600-GTL	1600	2011	2012	168B407D7	DK045			
BUELL									
BUELL	M2	1200	1998	2002					
BUELL	M2-CYCLONE	1200	1998	2002					
BUELL	S1-LIGHTNING	1200	1998	2002					
BUELL	S3-THUNDERBOLT	1200	1998	2002					
BUELL	S3T-THUNDERBOLT	1200	1998	2002					
BUELL	X1	1200	1998	2002					
CAGIVA									
CAGIVA	MITO	125	1990	1990			78B40870	DK022	
CAGIVA	MITO	125	1991	1994			78B40870	DK022	
CAGIVA	MITO-2	125	1992	→			78B40870	DK022	
CAGIVA	MITO-525	125	2006	2010			78B40870	DK022	
CAGIVA	MITO-EV	125	1995	2007			78B40870	DK022	
CAGIVA	PLANET	125	1997	2003			78B40870	DK022	
CAGIVA	PLANET	125	2004	2007			78B40870	DK022	
CAGIVA	RAPTOR	125	2004	2006			78B40870	DK022	
CAGIVA	SUPER-CITY	125	1992	2000			78B40870	DK022	
CAGIVA	RIVER	500	1999	2001			78B40870	DK022	
CAGIVA	RIVER	600	1995	1999			78B40870	DK022	
CAGIVA	ELEFANT	750	1994	1995					
CAGIVA	ELEFANT-I.E.	900	1990	1996					
CAGIVA	GRAN-CANYON	900	1999	2004					
CCM									
CCM	DS	644	2002	2006					
CCM	R30	644	2002	2006					
DAELIM									
DAELIM	ROADWIN-FI	125	2011	2012	68B407E9	DK098			
DAELIM	ROADWIN-R-FI	125	1999	2000	68B407E9	DK098			
DAELIM	ROADWIN-R-FI	125	2011	2012	68B407E9	DK098			
DAELIM	ROCKET	125	1999	2000	68B407E9	DK098			
DAELIM	VL-DAYSTAR-CLASSIC	125	2000	2003	68B407E9	DK098			
DAELIM	VL-DAYSTAR-FI	125	2000	2012	68B407E9	DK098			
DAELIM	VT-EVOLUTION	125	1999	2011	68B407E9	DK098			
DERBI									
DERBI	GP1	50	2001	2002					
DERBI	GP1-REPLICA	50	2001	2002					
DERBI	BOULEVARD-S	125	2007	→	68B407B0	DK002			
DERBI	PREDATOR	125	1999	→	68B40730	DK010			
DERBI	RAMBLA	125	2009	2011	68B407B0	DK002			
DERBI	PREDATOR	180	1999	→	68B40730	DK010			
DERBI	RAMBLA	250	2009	→	68B407B0	DK002			
DERBI	RAMBLA	300	2010	2011	68B407B0	DK002			
DUCATI									
DUCATI	350-SUPERSPORT	350	1991	1992			78B40870	DK022	

ACCOSSATO

dischi freno brake rotor

INDICE ANALITICO / index

	DK: POSTERIORE / Rear				DISCO S. SPORT BREMBO	DKS OEM ANTERIORE Front	DKR ANTERIORE Front
	FISSO / Fix		FLOTTANTE / Floating				
	BREMBO	ACCOSSATO	BREMBO	ACCOSSATO			
	68B407G9	DK186					
	68B407C0	DK004					
	68B407G9	DK186					
	68B407C0	DK004					
	68B407C0	DK004					
	68B407G9	DK186					
	68B407C0	DK004					
	68B407C0	DK004					
	68B407C0	DK004					
	68B407C0	DK004					
	68B407C0	DK004					
	68B407C0	DK004					
	68B407C0	DK004					
	68B407C0	DK004					
BUELL							
	68B40780	DK016					
	68B40780	DK016					
	68B40780	DK016					
	68B40780	DK016					
	68B40780	DK016					
	68B40780	DK016					
CAGIVA							
	68B40780	DK016					
	68B40780	DK016					
	68B40780	DK016					
CCM							
	68B40752	DK018					
	68B40752	DK018					
DAELIM							
DERBI							
	68B40713	DK009					
	68B40713	DK009					
	68B40732	DK037					
	68B40713	DK009					
	68B40732	DK037					
	68B40713	DK009					
	68B40732	DK037					
	68B40732	DK037					
DUCATI							
	68B40791	DK008					

dischi freno brake rotor

INDICE ANALITICO / index

MARCA / Brand	MODELLO / Model	CC	DA From	A To	DK: ANTERIORE / Front			
					FISSO / Fix		FLOTTANTE / Floating	
					BREMBO	ACCOSSATO	BREMBO	ACCOSSATO
DUCATI	400-SUPERSPORT	400	1993	1997			78B40870	DK022
DUCATI	MONSTER-400	400	1995	1997			78B40870	DK022
DUCATI	MONSTER-400-DARK	400	2003	→			78B40870	DK022
DUCATI	MONSTSER-400	400	2001	2006			78B40870	DK022
DUCATI	SCRAMBLER	400	2015	→				
DUCATI	600-SUPERSPORT	600	1991	2000			78B40870	DK022
DUCATI	MONSTER-600	600	1993	2002			78B40870	DK022
DUCATI	MONSTER-600	600	1998	→			78B40870	DK022
DUCATI	MONSTER-600-DARK	600	1998	→			78B40870	DK022
DUCATI	MONSTER-600-DARK	600	2000	2001			78B40870	DK022
DUCATI	MONSTER-600-DARK-CITY	600	1999	→			78B40870	DK022
DUCATI	MONSTER-600-DARK-CITY	600	2000	2001			78B40870	DK022
DUCATI	MONSTER-600-METALLIC	600	2000	2001			78B40870	DK022
DUCATI	MONSTER-620-DARK-(MONODISCO)	620	2004	2005			78B40870	DK022
DUCATI	MONSTER-620-I.E.	620	2005	2006			78B40850	DK126
DUCATI	MONSTER-620-S-I.E.	620	2002	2004			78B40870	DK022
DUCATI	MULTISTRADA-620-(BIDISCO)	620	2004	→			78B40850	DK126
DUCATI	MULTISTRADA-620-SD	620	2004	2006			78B40870	DK022
DUCATI	SPORT	620	2003	2004			78B40870	DK022
DUCATI	SUPERSPORT	620	2002	2005			78B40870	DK022
DUCATI	MONSTER-695	695	2006	2007			78B40850	DK126
DUCATI	MONSTER-696	696	2008	2012			78B40870	DK022
DUCATI	MONSTER-696	696	2013	→			78B40885	DK138
DUCATI	MONSTER-696-ABS	696	2008	2012			78B40870	DK022
DUCATI	MONSTER-696-ABS	696	2013	→			78B40885	DK138
DUCATI	MONSTER-696-ANNIVERSARY/ABS	696	2013	→			78B40885	DK138
DUCATI	748	748	2000	2002			78B40870	DK022
DUCATI	749	748	2003	2007			78B40880	DK136
DUCATI	748-BIPOSTO	748	1995	1998			78B40870	DK022
DUCATI	748-BIPOSTO	748	1999	2002			78B40870	DK022
DUCATI	748-R	748	2000	2000			78B40870	DK022
DUCATI	748-S	748	1999	2002			78B40870	DK022
DUCATI	748-SP	748	1995	1997			78B40870	DK022
DUCATI	748-SPS	748	1998	1999			78B40870	DK022
DUCATI	749-DARK	748	2003	2007			78B40880	DK136
DUCATI	749-R	748	2003	2007			78B40880	DK136
DUCATI	749-S	748	2003	2007			78B40880	DK136
DUCATI	750-SPORT	750	2001	2002			78B40870	DK022
DUCATI	750-SUPERSPORT	750	1991	1999			78B40870	DK022
DUCATI	750-SUPERSPORT-I.E.	750	2000	2002			78B40870	DK022
DUCATI	M0NSTER-750-DARK-I.E.	750	2002	→			78B40870	DK022
DUCATI	MONSTER-750	750	1994	2001			78B40870	DK022
DUCATI	MONSTER-750	750	2000	2001			78B40870	DK022
DUCATI	MONSTER-750-(BIDISCO)	750	1996	1997			78B40870	DK022
DUCATI	MONSTER-750-(MONODISCO)	750	1996	1997			78B40870	DK022
DUCATI	MONSTER-750-DARK	750	2000	2001			78B40870	DK022
DUCATI	MONSTER-750-METALLIC	750	2000	2001			78B40870	DK022
DUCATI	MONSTER-795	795	2012	2013			78B40885	DK138
DUCATI	MONSTER-795	795	2014	→			78B40885	DK138
DUCATI	MONSTER-795-ABS	795	2013	→			78B40885	DK138
DUCATI	MONSTER-795-ABS-CORSE-STRIPE	795	2014	→			78B40885	DK138
DUCATI	HYPERMOTARD	796	2010	2012			78B40845	DK123
DUCATI	MONSTER	796	2010	→			78B40878	DK053
DUCATI	MONSTER-ABS	796	2010	2012			78B40878	DK053
DUCATI	MONSTER-ABS-ANNIVERSARY	796	2013	→			78B40878	DK053
DUCATI	MONSTER-ANNIVERSARY	796	2013	→			78B40878	DK053
DUCATI	800-SPORT	803	2003	2004			78B40870	DK022
DUCATI	MONSTER-800-S-I.E.	803	2003	2004			78B40870	DK022
DUCATI	MONSTER-S2-R	803	2005	2006			78B40850	DK126
DUCATI	MONSTER-S2-R-DARK	803	2005	2006			78B40850	DK126
DUCATI	SCRAMBLER-CLASSIC	803	2015	→				

ACCOSSATO

dischi freno brake rotor

INDICE ANALITICO / index

	DK: POSTERIORE / Rear				DISCO S. SPORT BREMBO	DKS OEM ANTERIORE Front	DKR ANTERIORE Front
	FISSO / Fix		FLOTTANTE / Floating				
	BREMBO	ACCOSSATO	BREMBO	ACCOSSATO			
	68B40791	DK008					
	68B40791	DK008					
	68B40791	DK008					
	68B40791	DK008					
	68B40791						
	68B40791	DK008					
	68B40791	DK008					
	68B40791						
	68B40791	DK008					
	68B40791	DK008					
	68B40791	DK008					
	68B40791	DK008					
	68B40791	DK008					
	68B40791	DK008					
	68B40791	DK008					
	68B40791	DK008					
	68B40791	DK008					
	68B40791	DK008					
	68B40791	DK008					
	68B40791	DK008					
	68B40791	DK008					
	68B40791	DK008					
	68B40791	DK008					
					208973710	DKS004	DKR004
	68B40768	DK162			208973711	DKS005	
					208973710	DKS004	
					208973710	DKS004	
					208973710	DKS004	
					208973710	DKS004	
					208973710	DKS004	
	68B40768	DK162			208973711	DKS005	
	68B40768	DK162			208973711	DKS005	
	68B40768	DK162			208973711	DKS005	
	68B40791	DK008					
	68B40791	DK008					
	68B40791	DK008					
	68B40791	DK008					
	68B40791	DK008					
	68B40791	DK008					
	68B40791	DK008					
	68B40791	DK008					
	68B40791	DK008					
	68B40791	DK008					
	68B40791	DK008					
	68B40791	DK008					
	68B40792	DK169					
	68B40792	DK169					
	68B407H0	DK187					
	68B407H0	DK187					
	68B40792	DK169					
	68B40791	DK008					
	68B40791	DK008					
	68B40792	DK169					
	68B40792	DK169					
	68B40791	DK008					

dischi freno brake rotor

INDICE ANALITICO / index

MARCA / Brand	MODELLO / Model	CC	DA From	A To	DK: ANTERIORE / Front			
					FISSO / Fix		FLOTTANTE / Floating	
					BREMBO	ACCOSSATO	BREMBO	ACCOSSATO
DUCATI	SCRAMBLER-FULL-THROTTLE	803	2015	→				
DUCATI	SCRAMBLER-ICON	803	2015	→				
DUCATI	SCRAMBLER-URBAN-ENDURO	803	2015	→				
DUCATI	SUPERSPORT-800	803	2006	→			78B40870	DK022
DUCATI	SUPERSPORT-800-S	803	2003	2004			78B40870	DK022
DUCATI	HYPERMOTARD	820	2013	→			78B40878	DK053
DUCATI	HYPERMOTARD-SP	820	2013	→			78B40878	DK053
DUCATI	HYPERMOTARD-TOURING	820	2013	→			78B40878	DK053
DUCATI	HYPERSTRADA	820	2013	→			78B40878	DK053
DUCATI	HYPERMOTARD-SP	821	2015	→			78B40878	DK053
DUCATI	MONSTER-821	821	2015	→			78B40878	DK053
DUCATI	MONSTER-821-DARK	821	2015	→			78B40878	DK053
DUCATI	MONSTER-821-STRIPE	821	2015	→			78B40878	DK053
DUCATI	848	848	2008	2010			78B40880	DK136
DUCATI	848-EVO	848	2011	→			78B40890	DK046
DUCATI	848-EVO-CORSE-SPECIAL-EDITION	848	2012	→			78B40890	DK046
DUCATI	848-SUPERBIKE	848	2013	→			78B40880	DK136
DUCATI	STREETFIGHTER	848	2012	→				
DUCATI	STREETFIGHTER-S	848	2012	→				
DUCATI	851	851	1989	1991			78B40870	DK022
DUCATI	851-SP2	851	1990	→			78B40870	DK022
DUCATI	851-SP3	851	1991	→			78B40870	DK022
DUCATI	851-SP4	851	1992	→			78B40870	DK022
DUCATI	851-SP5	851	1993	→			78B40870	DK022
DUCATI	888-SP	888	1990	1993			78B40870	DK022
DUCATI	888-SUPERBIKE-STRADA	888	1994	1995			78B40870	DK022
DUCATI	PANIGALE	899	2014	→			78B40880	DK136
DUCATI	900-SUPERSPORT	900	1989	1990			78B40870	DK022
DUCATI	900-SUPERSPORT	900	1991	1999			78B40870	DK022
DUCATI	900-SUPERSPORT-I.E.	900	2000	2002			78B40870	DK022
DUCATI	900-SUPERSPORT-S-I.E.	900	2002	→			78B40870	DK022
DUCATI	MH-900-EVOLUTION	900	2001	2002			78B40870	DK022
DUCATI	MONSTER-900	900	1993	1999			78B40870	DK022
DUCATI	MONSTER-900-CROMO	900	1998	→			78B40870	DK022
DUCATI	MONSTER-900-CROMO-I.E.	900	2000	2001			78B40870	DK022
DUCATI	MONSTER-900-DARK-CITY	900	1999	→			78B40870	DK022
DUCATI	MONSTER-900-DARK-I.E.	900	2000	2002			78B40870	DK022
DUCATI	MONSTER-900-I.E.	900	2000	→			78B40870	DK022
DUCATI	MONSTER-900-METALLIC-I.E.	900	2000	2001			78B40870	DK022
DUCATI	MONSTER-900-S-I.E.	900	2000	2001			78B40870	DK022
DUCATI	MONSTER-900-SPECIAL	900	1998	→			78B40870	DK022
DUCATI	SPORT	900	2002	→			78B40870	DK022
DUCATI	SUPERLIGHT-900	900	1992	1992			78B40870	DK022
DUCATI	SUPERLIGHT-900	900	1993	1997			78B40870	DK022
DUCATI	907-I.E.	907	1990	1991				
DUCATI	907-I.E.	907	1992	1993			78B40870	DK022
DUCATI	916	916	1994	1996			78B40870	DK022
DUCATI	916-BIPOSTO-SENNA	916	1994	1998			78B40870	DK022
DUCATI	916-RACING	916	1994	1997			78B40870	DK022
DUCATI	916-S	916	1994	1996			78B40870	DK022
DUCATI	916-SP	916	1994	1996			78B40870	DK022
DUCATI	916-SPS	916	1997	1998			78B40870	DK022
DUCATI	MONSTER-S4	916	2001	2003			78B40870	DK022
DUCATI	MONSTER-S4-FOGGY	916	2002	→			78B40870	DK022
DUCATI	ST4	916	1998	2004			78B40870	DK022
DUCATI	ST4-S	916	2003	→			78B40870	DK022
DUCATI	ST2	944	1997	2003			78B40870	DK022
DUCATI	996	996	1999	2001			78B40870	DK022
DUCATI	996-R	996	2001	→			78B40870	DK022
DUCATI	996-S	996	1999	2001			78B40870	DK022
DUCATI	996-SPS	996	1999	2001			78B40870	DK022

	DK: POSTERIORE / Rear				DISCO S. SPORT BREMBO	DKS OEM ANTERIORE Front	DKR ANTERIORE Front
	FISSO / Fix		FLOTTANTE / Floating				
	BREMBO	ACCOSSATO	BREMBO	ACCOSSATO			
	68B40791	DK008					
	68B40791	DK008					
	68B40791	DK008					
	68B40791	DK008					
	68B40791	DK008					
	68B407H0	DK187					
	68B407H0	DK187					
	68B407H0	DK187					
	68B407H0	DK187					
	68B407H0	DK187					
	68B40791	DK008					
	68B40791	DK008					
	68B40791	DK008					
	68B40792	DK169			208973711	DKS005	
	68B40792	DK169			208973711	DKS005	
	68B40792	DK169			208973711	DKS005	
	68B40792	DK169					
	68B40792	DK169			208973736	DKS006	
	68B40792	DK169			208973736	DKS006	
	68B40791	DK008					
	68B40791	DK008					
	68B40791	DK008					
	68B40791	DK008					
	68B40791	DK008					
	68B40791	DK008					
	68B40791	DK008					
	68B40791	DK008			208973711	DKS005	
	68B40791	DK008					
	68B40791	DK008					
	68B40791	DK008					
	68B40791	DK008					
	68B40791	DK008					
	68B40791	DK008					
	68B40791	DK008					
	68B40791	DK008					
	68B40791	DK008					
	68B40791	DK008					
	68B40791	DK008					
	68B40791	DK008					
	68B40791	DK008					
	68B40791	DK008					
	68B40791	DK008					
	68B40791	DK008					
					208973710	DKS004	DKR004
					208973710	DKS004	
					208973710	DKS004	
					208973710	DKS004	
					208973710	DKS004	
					208973710	DKS004	
	68B40791	DK008			208973710	DKS004	
	68B40791	DK008			208973710	DKS004	
	68B40791	DK008					
	68B40791	DK008					
	68B40791	DK008					
					208973710	DKS004	DKR004
					208973710	DKS004	
					208973710	DKS004	

dischi freno brake rotor

INDICE ANALITICO / index

MARCA / Brand	MODELLO / Model	CC	DA From	A To	DK: ANTERIORE / Front			
					FISSO / Fix		FLOTTANTE / Floating	
					BREMBO	ACCOSSATO	BREMBO	ACCOSSATO
DUCATI	996-SPS-II	996	1999	2001			78B40870	DK022
DUCATI	996-SPS-III	996	1999	2001			78B40870	DK022
DUCATI	ST4-S	996	2001	2005			78B40870	DK022
DUCATI	998	998	2002	→			78B40870	DK022
DUCATI	999	998	2003	2007			78B40880	DK136
DUCATI	998-F.E.	998	2002	→			78B40870	DK022
DUCATI	998-MATRIX	998	2002	→			78B40870	DK022
DUCATI	998-S	998	2002	→			78B40870	DK022
DUCATI	999-R	998	2003	2007			78B40880	DK136
DUCATI	999-S	998	2003	2007			78B40880	DK136
DUCATI	999-RS	999	-	-				
DUCATI	999-XEROX	999	2003	2007			78B40880	DK136
DUCATI	1000SS-S	1000	2003	→			78B40870	DK022
DUCATI	1100SS	1000	2003	2006			78B40870	DK022
DUCATI	DESMOSEDICI-RR	1000	2008	→			78B40890	DK046
DUCATI	GT-1000-TOURING	1000	2006	2010			78B40870	DK022
DUCATI	MONSTER-1000-S-I.E.	1000	2003	2005			78B40870	DK022
DUCATI	MONSTER-S2-R-1000	1000	2006	2007			78B40870	DK022
DUCATI	MONSTER-S2-R-1000-DARK	1000	2006	2007			78B40850	DK126
DUCATI	MONSTER-S4-1000-R	1000	2003	2004			78B40870	DK022
DUCATI	MONSTER-S4-1000-R-(MONOBRACCIO)	1000	2005	2006			78B40870	DK022
DUCATI	MONSTER-S4-1000-RS	1000	2006	2006			78B40880	DK136
DUCATI	MULTISTRADA/S	1000	2003	2006				
DUCATI	PAUL-SMART-I.E.	1000	2006	2007			78B40870	DK022
DUCATI	SPORT	1000	2006	2008			78B40870	DK022
DUCATI	SPORT-S	1000	2007	→			78B40870	DK022
DUCATI	ST3	1000	2004	2006			78B40870	DK022
DUCATI	ST3-S-ABS	1000	2006	2007			78B40870	DK022
DUCATI	1098 RS	-	-	-				
DUCATI	1098/R/S/TRICOLORE	1098	2007	→			78B40890	DK046
DUCATI	STREETFIGHTER	1098	2009	→			78B40890	DK046
DUCATI	STREETFIGHTER-S	1098	2009	→			78B40890	DK046
DUCATI	HYPERMOTARD	1100	2007	2009			78B40845	DK123
DUCATI	HYPERMOTARD-EVO	1100	2010	2012			78B40845	DK123
DUCATI	HYPERMOTARD-EVO-SP	1100	2010	2012			78B40845	DK123
DUCATI	HYPERMOTARD-S	1100	2007	2009			78B40845	DK123
DUCATI	MONSTER	1100	2009	→			78B40878	DK053
DUCATI	MONSTER-EVO-ABS	1100	2011	→			78B40878	DK053
DUCATI	MONSTER-EVO-ABS-ANNIVERSARY	1100	2011	2011			78B40878	DK053
DUCATI	MONSTER-S	1100	2009	2010			78B40880	DK136
DUCATI	MULTISTRADA/S	1100	2007	2009			78B40878	DK053
DUCATI	1198	1198	2009	→			78B40890	DK046
DUCATI	1098-BAYLISS	1198	2009	→			78B40890	DK046
DUCATI	1098-R	1198	2009	→			78B40890	DK046
DUCATI	1198-S	1198	2009	→			78B40890	DK046
DUCATI	1198-SP	1198	2011	→			78B40890	DK046
DUCATI	PANIGALE	1199	2012	→			78B40890	DK046
DUCATI	PANIGALE RS	1199	-	-				
DUCATI	PANIGALE-R	1199	2013	→			78B40890	DK046
DUCATI	PANIGALE-S	1199	2012	→			78B40890	DK046
DUCATI	PANIGALE-S-ABS	1199	2012	→			78B40890	DK046
DUCATI	PANIGALE-S-TRICOLORE-ABS	1199	2012	→			78B40890	DK046
DUCATI	SUPERLEGGERA	1199	2014	→			78B40890	DK046
DUCATI	DIAVEL	1200	2011	→			78B40878	DK053
DUCATI	DIAVEL-CARBON	1200	2013	→			78B40878	DK053
DUCATI	DIAVEL-DARK	1200	2013	→			78B40878	DK053
DUCATI	DIAVEL-STRADA	1200	2013	→			78B40878	DK053
DUCATI	DIAVEL-TITANIUM	1200	2015	→			78B40878	DK053
DUCATI	MONSTER	1200	2014	→			78B40878	DK053
DUCATI	MONSTER-R	1200	2015	→			78B408A4	DK148
DUCATI	MONSTER-S	1200	2014	→			78B408A4	DK148

ACCOSSATO

dischi freno brake rotor

INDICE ANALITICO / index

	DK: POSTERIORE / Rear				DISCO S. SPORT BREMBO	DKS OEM ANTERIORE Front	DKR ANTERIORE Front
	FISSO / Fix		FLOTTANTE / Floating				
	BREMBO	ACCOSSATO	BREMBO	ACCOSSATO			
					208973710	DKS004	
					208973710	DKS004	
	68B40791	DK008					
					208973710	DKS004	DKR004
	68B40768	DK162			208973711	DKS005	
					208973710	DKS004	
					208973710	DKS004	
					208973710	DKS004	
	68B40768	DK162					
	68B40768	DK162			208973711	DKS005	
							DKR007
	68B40768	DK162			208973711	DKS005	
	68B40791	DK008					
	68B40791	DK008					
	68B40768	DK162			208B85911	DKS009	
	68B40791	DK008					
	68B40791	DK008					
	68B40791	DK008			208973710	DKS004	
	68B40791	DK008					
	68B40792	DK169			208973710	DKS004	
	68B40792	DK169			208973710	DKS004	
	68B40792	DK169			208973711	DKS005	
	68B40792	DK169					
	68B40791	DK008					
	68B40791	DK008					
	68B40791	DK008					
	68B40791	DK008					
	68B40791	DK008					
							DKR007
	68B407E8	DK178			208B85911	DKS009	
	68B407E8	DK178			208B85911	DKS009	
	68B407E8	DK178			208B85911	DKS009	
	68B40792	DK169					
	68B40792	DK169					
	68B40792	DK169					
	68B40792	DK169					
	68B40792	DK169			208973736	DKS006	
	68B407H0	DK187			208973736	DKS006	
	68B407H0	DK187			208973736	DKS006	
	68B40792	DK169			208973711	DKS005	
	68B407H1	DK047					
	68B407E8	DK178			208B85911	DKS009	
	68B407E8	DK178			208B85911	DKS009	
	68B407E8	DK178			208B85911	DKS009	
	68B407E8	DK178			208B85911	DKS009	DKR007
	68B407E8	DK178			208B85911	DKS009	DKR007
	68B407H1	DK047			208B85911	DKS009	
							DKR012
	68B407H1	DK047			208B85911	DKS009	
	68B407H1	DK047			208B85911	DKS009	
	68B407H1	DK047			208B85911	DKS009	
	68B407H1	DK047			208B85911	DKS009	
	68B407H1	DK047			208B85911	DKS009	
	68B407H2	DK188			208973736	DKS006	
	68B407H2	DK188			208973736	DKS006	
	68B407H2	DK188			208973736	DKS006	
	68B407H2	DK188			208973736	DKS006	
	68B407H2	DK188			208973736	DKS006	
	68B407H1	DK047			208973736	DKS006	
	68B407H1	DK047			208973736	DKS006	
	68B407H1	DK047			208973736	DKS006	

dischi freno brake rotor

INDICE ANALITICO / index

MARCA / Brand	MODELLO / Model	CC	DA From	A To	DK: ANTERIORE / Front				
					FISSO / Fix		FLOTTANTE / Floating		
					BREMBO	ACCOSSATO	BREMBO	ACCOSSATO	
DUCATI	MONSTER-S-STRIPE	1200	2015	→			78B408A4	DK148	
DUCATI	MULTISTRADA	1200	2010	2012			78B40878	DK053	
DUCATI	MULTISTRADA	1200	2015	→			78B40878	DK053	
DUCATI	MULTISTRADA-ABS	1200	2010	→			78B40878	DK053	
DUCATI	MULTISTRADA-S	1200	2015	→			78B408A4	DK148	
DUCATI	MULTISTRADA-S-D-AIR	1200	2015	→			78B408A4	DK148	
DUCATI	MULTISTRADA-S-GT	1200	2013	→			78B40878	DK053	
DUCATI	MULTISTRADA-S-PIKES-PEAK	1200	2013	→			78B40878	DK053	
DUCATI	MULTISTRADA-S-SPORT	1200	2011	2012					
DUCATI	MULTISTRADA-S-TOURING	1200	2013	→			78B40878	DK053	
DUCATI	MULTISTRADA-TOURING-ABS	1200	2010	→			78B40878	DK053	
DUCATI	PANIGALE	1299	2015	→			78B40890	DK046	
DUCATI	PANIGALE-R	1299	2015	→			78B40890	DK046	
DUCATI	PANIGALE-S	1299	2015	→			78B40890	DK046	
FANTIC MOTOR									
FANTIC MOTOR	LEADER	50	1995	→	68B40717	DK227			
GARELLI									
GARELLI	MOSQUITO	150	2008	→	68B40740	DK014			
GAS GAS									
GAS GAS	EC	125	1996	2011					
GAS GAS	MC	125	1996	2009					
GAS GAS	EC	200	2004	2007					
GAS GAS	HOBBY	200	2007	→					
GAS GAS	EC	250	1996	2009					
GAS GAS	EC-2T	250	1996	2009					
GAS GAS	EC-4T	250	1996	2009					
GAS GAS	EC-F-RACING	250	2013	2013					
GAS GAS	EC-RACING	250	2012	→					
GAS GAS	MC	250	1996	2009					
GAS GAS	EC	300	1996	2009					
GAS GAS	EC-2T	300	2013	→					
GAS GAS	EC-F-RACING	300	2013	→					
GAS GAS	EC-RACING	300	2012	→					
GAS GAS	MC	300	1996	2009					
GAS GAS	EC	400	2002	2005					
GAS GAS	EC	400	2006	2007					
GAS GAS	FSE	400	2004	2007					
GAS GAS	MC	400	2002	2005					
GAS GAS	MC	400	2006	2007					
GAS GAS	PAMPERA	400	2006	2007					
GAS GAS	EC	450	2003	2007					
GAS GAS	FSE	450	2003	2007					
GAS GAS	FSR	450	2007	→					
GAS GAS	MC	450	2003	2006					
GAS GAS	MC	450	2007	→					
GAS GAS	PAMPERA	450	2007	2008					
GILERA									
GILERA	DNA	50	2000	→					
GILERA	ICE	50	1999	→	68B40722	DK026			
GILERA	RUNNER	50	1994	2000	68B40730	DK010			
GILERA	RUNNER	50	2001	→	68B40730	DK010			
GILERA	RUNNER-DD	50	1996	→	68B40730	DK010			
GILERA	RUNNER-PURE-JET	50	2003	→	68B40730	DK010			
GILERA	RUNNER-RACING-REPLICA	50	2003	→	68B40730	DK010			
GILERA	RUNNER-SP	50	2000	2001	68B40730	DK010			
GILERA	RUNNER-SP	50	2006	→	68B40730	DK010			
GILERA	STALKER	50	1998	→	68B40717	DK227			
GILERA	STORM	50	1996	2001	68B40717	DK227			
GILERA	TYPHOON	50	1996	→	68B40717	DK227			
GILERA	TYPHOON-BENETTON	50	1993	1995	68B40717	DK227			
GILERA	TYPHOON-MARTINI	50	1996	→	68B40717	DK227			

	DK: POSTERIORE / Rear				DISCO S. SPORT BREMBO	DKS OEM ANTERIORE Front	DKR ANTERIORE Front
	FISSO / Fix		FLOTTANTE / Floating				
	BREMBO	ACCOSSATO	BREMBO	ACCOSSATO			
	68B407H1	DK047			208973736	DKS006	
	68B407H1	DK047			208973736	DKS006	
	68B407H2	DK188			208973736	DKS006	
	68B407H1	DK047			208973736	DKS006	
	68B407H2	DK188			208973736	DKS006	
	68B407H2	DK188			208973736	DKS006	
	68B407H1	DK047			208973736	DKS006	
	68B407H1	DK047			208973736	DKS006	
	68B407H1	DK047					
	68B407H1	DK047			208973736	DKS006	
					208973736	DKS006	
	68B407H1	DK047					
	68B407H1	DK047					
	68B407H1	DK047					
FANTIC MOTOR							
GARELLI							
	68B40740	DK014					
GAS GAS							
	68B40752	DK018					
	68B40752	DK018					
	68B40752	DK018					
	68B40752	DK018					
	68B40752	DK018					
	68B40752	DK018					
	68B40752	DK018					
	68B40752	DK018					
	68B40752	DK018					
	68B40752	DK018					
	68B40752	DK018					
	68B40752	DK018					
	68B40752	DK018					
	68B40752	DK018					
	68B40752	DK018					
	68B40752	DK018					
	68B40752	DK018					
	68B40752	DK018					
	68B40752	DK018					
	68B40752	DK018					
	68B40752	DK018					
	68B40752	DK018					
	68B40752	DK018					
	68B40752	DK018					
	68B40752	DK018					
GILERA							
	68B40776	DK091					
	68B40713	DK009					
	68B40713	DK009					
	68B40713	DK009					
	68B40713	DK009					
	68B40713	DK009					
	68B40713	DK009					
	68B40713	DK009					
	68B40713	DK009					

dischi freno brake rotor

INDICE ANALITICO / index

MARCA / Brand	MODELLO / Model	CC	DA From	A To	DK: ANTERIORE / Front			
					FISSO / Fix		FLOTTANTE / Floating	
					BREMBO	ACCOSSATO	BREMBO	ACCOSSATO
GILERA	TYPHOON-XR	50	1996	→	68B40717	DK227		
GILERA	DNA	125	2001	2003	68B40776	DK091		
GILERA	GFR	125	1993	→			78B40870	DK022
GILERA	NEXUS	125	2007	2009	68B407B6	DK092		
GILERA	NEXUS-IE	125	2010	→	68B407B6	DK092		
GILERA	RUNNER	125	1995	2005	68B40717	DK227		
GILERA	RUNNER	125	2006	→	68B40730	DK010		
GILERA	RUNNER-FX-(GRIMECA CALIPER)	125	1997	2005	68B40730	DK010		
GILERA	RUNNER-FX-(HENGTONG CALIPER)	125	1997	2005	68B40730	DK010		
GILERA	RUNNER-FX-SP-(GRIMECA CALIPER)	125	1998	2005	68B40730	DK010		
GILERA	RUNNER-FX-SP-(HENGTONG CALIPER)	125	1998	2005	68B40730	DK010		
GILERA	RUNNER-ST	125	2008	→	68B40774	DK090		
GILERA	RUNNER-VX-4T-(GRIMECA CALIPER)	125	1999	2004	68B40730	DK010		
GILERA	RUNNER-VX-4T-(GRIMECA CALIPER)	125	2005	2007	68B40774	DK090		
GILERA	RUNNER-VX-4T-(HENGTONG CALIPER)	125	1999	2004	68B40730	DK010		
GILERA	RUNNER-VX-4T-(HENGTONG CALIPER)	125	2005	2007	68B40774	DK090		
GILERA	TYPHOON-XR	125	1995	→	68B40717	DK227		
GILERA	DNA	180	2001	2003	68B40776	DK091		
GILERA	RUNNER-FXR	180	1998	2004	68B40730	DK010		
GILERA	RUNNER-FXR-SP-(GRIMECA CALIPER)	180	1999	2005	68B40730	DK010		
GILERA	RUNNER-FXR-SP-(HENGTONG CALIPER)	180	1999	2005	68B40730	DK010		
GILERA	RUNNER-SP	180	1998	→	68B40730	DK010		
GILERA	RUNNER-VXR	180	1999	→	68B40730	DK010		
GILERA	RUNNER-VXR	180	2000	→	68B40730	DK010		
GILERA	HERCULES	200	2002	→	68B40730	DK010		
GILERA	RUNNER-SP	200	2001	2002	68B40730	DK010		
GILERA	RUNNER-VXR	200	2001	2004	68B40730	DK010		
GILERA	RUNNER-VXR	200	2005	2008	68B40774	DK090		
GILERA	NEXUS	250	2006	2008	68B407B6	DK092		
GILERA	NEXUS	300	2008	→	68B407B6	DK092		
GILERA	FUOCO-I.E.	500	2007	2011	68B40774	DK090		
GILERA	NEXUS	500	2004	2013	68B407B6	DK092		
GILERA	NEXUS-I.E.-SP	500	2006	2008	68B407B6	DK092		
HARLEY DAVIDSON								
HARLEY DAVIDSON	XL-883-R-ROADSTER	883	2010	2011			78B40891	DK011
HARLEY DAVIDSON	XL-883-R-SPORTSTER	883	2000	2003			78B40891	DK011
HARLEY DAVIDSON	XL-883-SPORTSTER-CUSTOM	883	2004	2010			78B40891	DK011
HARLEY DAVIDSON	XLH-883	883	1970	1984			78B40822	DK114
HARLEY DAVIDSON	XLH-883-SPORTSTER	883	1985	1999			78B40822	DK114
HARLEY DAVIDSON	XLH-883-SPORTSTER	883	2000	2006			78B40891	DK011
HARLEY DAVIDSON	XLH-883-SPORTSTER-HUGGER	883	2000	2003			78B40891	DK011
HARLEY DAVIDSON	XL-L IRON	883	2009	2013			78B40891	DK011
HARLEY DAVIDSON	XL-L-SPORTSTER-LOW	883	2007	2013			78B40891	DK011
HARLEY DAVIDSON	XL-SPORTSTER-CUSTOM	883	2000	2003			78B40891	DK011
HARLEY DAVIDSON	XL	1000	1978	1981			78B40822	DK114
HARLEY DAVIDSON	XLS-ROADSTER	1000	1979	1984			78B40822	DK114
HARLEY DAVIDSON	VRSCA-V-ROD	1130	2002	2005				
HARLEY DAVIDSON	XL-1200-R	1200	2000	2006			78B40891	DK011
HARLEY DAVIDSON	XL-1200-R-SPORTSTER-ROADSTER	1200	2004	2008			78B40891	DK011
HARLEY DAVIDSON	XL-1200-SPORTSTER	1200	2004	2006			78B40891	DK011
HARLEY DAVIDSON	XL-1200-SPORTSTER-CUSTOM	1200	2000	2003			78B40891	DK011
HARLEY DAVIDSON	XL-1200-SPORTSTER-NIGHTSTER	1200	2007	2013			78B40891	DK011
HARLEY DAVIDSON	XL-1200-SPORTSTER-SPORT	1200	2000	2003			78B40891	DK011
HARLEY DAVIDSON	XL-C-SPORTSTER-CUSTOM	1200	2004	2013			78B40891	DK011
HARLEY DAVIDSON	XLH-1200-SPORT	1200	1996	1999			78B40822	DK114
HARLEY DAVIDSON	XLH-1200-SPORTSTER	1200	1987	1999			78B40822	DK114
HARLEY DAVIDSON	XLH-1200-SPORTSTER	1200	2000	2003			78B40891	DK011
HARLEY DAVIDSON	XL-L-SPORTSTER-LOW	1200	2007	2013			78B40891	DK011
HARLEY DAVIDSON	XL-R-SPORTSTER-FORTY EIGHT	1200	2010	2011			78B40891	DK011
HARLEY DAVIDSON	XL-S-SPORT	1200	2000	2003			78B40891	DK011
HARLEY DAVIDSON	XR-1200	1200	2008	2010			78B40891	DK011

	DK: POSTERIORE / Rear				DISCO S. SPORT BREMBO	DKS OEM ANTERIORE Front	DKR ANTERIORE Front
	FISSO / Fix		FLOTTANTE / Floating				
	BREMBO	ACCOSSATO	BREMBO	ACCOSSATO			
	68B40776	DK091					
	68B40777	DK163					
	68B40777	DK163					
	68B40776	DK091					
	68B40776	DK091					
	68B40776	DK091					
	68B40776	DK091					
	68B40776	DK091					
	68B40776	DK091					
	68B40776	DK091					
	68B40776	DK091					
	68B40738	DK025					
	68B40776	DK091					
	68B40738	DK025					
	68B40776	DK091					
	68B40776	DK091					
	68B40776	DK091					
	68B40776	DK091					
	68B40776	DK091					
	68B40776	DK091					
	68B40776	DK091					
	68B40776	DK091					
	68B40776	DK091					
	68B40738	DK025					
	68B40738	DK025					
	68B40777	DK163					
	68B40777	DK163					
	68B40777	DK163					
	68B40777	DK163					
HARLEY DAVIDSON							
			78B40828	DK035			
	68B407E0	DK176					
	68B407E0	DK176					
			78B40828	DK035			
			78B40828	DK035			
			78B40828	DK035			
	68B407E0	DK176					
	68B407E0	DK176					
			78B40828	DK035			
			78B40828	DK035			
			78B40828	DK035			
			78B40828	DK035			
			78B40828	DK035			
			78B40828	DK035			
	68B407E0	DK176					
			78B40828	DK035			
			78B40828	DK035			

dischi freno brake rotor

INDICE ANALITICO / index

MARCA / Brand	MODELLO / Model	CC	DA From	A To	DK: ANTERIORE / Front			
					FISSO / Fix		FLOTTANTE / Floating	
					BREMBO	ACCOSSATO	BREMBO	ACCOSSATO
HARLEY DAVIDSON	XR-1200-X	1200	2010	2012			78B40891	DK011
HARLEY DAVIDSON	FLH-1340-ELECTRA-GLIDE	1340	1982	1983			78B40822	DK114
HARLEY DAVIDSON	FLH-80	1340	1981	1999			78B40822	DK114
HARLEY DAVIDSON	FLSTC-FAT-BOY	1340	1989	1999			78B40822	DK114
HARLEY DAVIDSON	FLSTC-FAT-BOY	1340	2000	2002			78B40891	DK011
HARLEY DAVIDSON	FLSTC-HERITAGE-SOFTAIL-CLASSIC	1340	1989	1999			78B40822	DK114
HARLEY DAVIDSON	FLSTC-HERITAGE-SOFTAIL-CLASSIC	1340	2000	2002			78B40891	DK011
HARLEY DAVIDSON	FLSTF-FAT-BOY	1340	1989	1999			78B40822	DK114
HARLEY DAVIDSON	FXDWG-DYNA-WIDE-GLIDE	1340	1993	1998			78B40822	DK114
HARLEY DAVIDSON	FXLR-1340-LOW-RIDER-CUSTOM	1340	1987	1999			78B40822	DK114
HARLEY DAVIDSON	FXLR-1340-LOW-RIDER-CUSTOM	1340	2000	2000			78B40891	DK011
HARLEY DAVIDSON	FXR-1340-SUPER-GLIDE	1340	1982	1999			78B40822	DK114
HARLEY DAVIDSON	FXRS-1340-LOW-RIDER-SPORT	1340	1987	1999			78B40822	DK114
HARLEY DAVIDSON	FXRS-LOW-RIDER-SPORT	1340	1987	1999			78B40822	DK114
HARLEY DAVIDSON	FXRT-1340-SPORT-GLIDE	1340	1987	1999			78B40822	DK114
HARLEY DAVIDSON	FXSTC-1340-SOFTAIL-CUSTOM	1340	1989	1999			78B40822	DK114
HARLEY DAVIDSON	FXSTS-1340-SPRINGER-SOFTAIL	1340	1989	1999			78B40822	DK114
HARLEY DAVIDSON	FXSTS-1340-SPRINGER-SOFTAIL	1340	2000	2002			78B40891	DK011
HARLEY DAVIDSON	FLHR/I-ROAD-KING	1450	1998	1999			78B40822	DK114
HARLEY DAVIDSON	FLHR/I-ROAD-KING	1450	2000	2007			78B40891	DK011
HARLEY DAVIDSON	FLHRCI-ROAD-KING-CLASSIC	1450	2000	2006				
HARLEY DAVIDSON	FLHT/I ELECTRA-GLIDE-STANDARD	1450	1998	1999			78B40822	DK114
HARLEY DAVIDSON	FLHT/I ELECTRA-GLIDE-STANDARD	1450	2000	2006			78B40891	DK011
HARLEY DAVIDSON	FLHTCUI-ELECTRA-GLIDE-ULTRA-CLAS.	1450	2000	2006			78B40891	DK011
HARLEY DAVIDSON	FLSTC-HERITAGE-SOFTAIL-CLASSIC	1450	2000	2006			78B40891	DK011
HARLEY DAVIDSON	FLSTF-FAT-BOY	1450	2000	2006			78B40891	DK011
HARLEY DAVIDSON	FLSTS/I-HERITAGE-SPRINGER	1450	2000	2003			78B40891	DK011
HARLEY DAVIDSON	FLTR/I-ROAD-GLIDE	1450	1998	1999			78B40822	DK114
HARLEY DAVIDSON	FLTR/I-ROAD-GLIDE-CLASSIC	1450	2000	2007			78B40891	DK011
HARLEY DAVIDSON	FXDC-DYNA-SUPER-GLIDE-CUSTOM	1450	2006	2007				
HARLEY DAVIDSON	FXD-DYNA-SUPER-GLIDE	1450	2000	2003			78B40891	DK011
HARLEY DAVIDSON	FXD-DYNA-SUPER-GLIDE	1450	2006	2007				
HARLEY DAVIDSON	FXDL-DYNA-GLIDE-LOW-RIDER	1450	2000	2006			78B40891	DK011
HARLEY DAVIDSON	FXDS-DYNA-SUPER-GLIDE-SPORT	1450	1998	1999			78B40822	DK114
HARLEY DAVIDSON	FXDS-DYNA-SUPER-GLIDE-SPORT	1450	2000	2006			78B40891	DK011
HARLEY DAVIDSON	FXDWG-DYNA-WIDE-GLIDE	1450	1993	1999			78B40822	DK114
HARLEY DAVIDSON	FXDWG-DYNA-WIDE-GLIDE	1450	2000	2007			78B40891	DK011
HARLEY DAVIDSON	FXDX-DYNA-SUPER-GLIDE-T-SPORT	1450	2000	2005			78B40891	DK011
HARLEY DAVIDSON	FXRS-SPORT-GLIDE	1450	1984	1986			78B40822	DK114
HARLEY DAVIDSON	FXRT-TOUR-GLIDE	1450	1984	1986			78B40822	DK114
HARLEY DAVIDSON	FXSTB/I-NIGHT-TRAIN	1450	2000	2007			78B40891	DK011
HARLEY DAVIDSON	FXSTB-ICE-BOB	1450	2000	2003			78B40822	DK114
HARLEY DAVIDSON	FXSTC-SOFTAIL-CUSTOM	1450	2000	2006			78B40891	DK011
HARLEY DAVIDSON	FXSTD-SOFTAIL-DEUCE	1450	2000	2006			78B40891	DK011
HARLEY DAVIDSON	FXSTS/I-SPRINGER-SOFTAIL	1450	2000	2006			78B40891	DK011
HARLEY DAVIDSON	FXST-SOFTAIL-STANDARD	1450	2000	2007			78B40891	DK011
HARLEY DAVIDSON	FLHRCI-ROAD-KING-CLASSIC	1584	2007	2007			78B40891	DK011
HARLEY DAVIDSON	FLHT/I ELECTRA-GLIDE-STANDARD	1584	2007	2007			78B40891	DK011
HARLEY DAVIDSON	FLHTCUI-ELECTRA-GLIDE-ULTRA-CLAS.	1584	2007	2008			78B40891	DK011
HARLEY DAVIDSON	FLHX-STREET-GLIDE	1584	2006	2007			78B40891	DK011
HARLEY DAVIDSON	FLSTB-FAT-BOY-SPECIAL	1584	2010	2013			78B40891	DK011
HARLEY DAVIDSON	FLSTB-SOFTAIL-CROSS-BONES	1584	2008	2001			78B40891	DK011
HARLEY DAVIDSON	FLSTC-HERITAGE-SOFTAIL-CLASSIC	1584	2007	2014			78B40891	DK011
HARLEY DAVIDSON	FLSTF-FAT-BOY	1584	2007	2014			78B40891	DK011
HARLEY DAVIDSON	FLSTSE-CVO-SOFTAIL-CONVERTIBLE	1584	2010	2011			78B40891	DK011
HARLEY DAVIDSON	FXCWC-ROCKER-C	1584	2008	2013			78B40891	DK011
HARLEY DAVIDSON	FXCW-ROCKER	1584	2008	2009			78B40891	DK011
HARLEY DAVIDSON	FXDB-DYNA-STREET-BOB	1584	2008	2014				
HARLEY DAVIDSON	FXDC-DYNA-SUPER-GLIDE-CUSTOM	1584	2008	2014				
HARLEY DAVIDSON	FXD-DYNA-SUPER-GLIDE	1584	2008	2010				
HARLEY DAVIDSON	FXDF-FAT-BOB	1584	2008	2014				

ACCOSSATO

dischi freno brake rotor

INDICE ANALITICO / index

	DK: POSTERIORE / Rear				DISCO S. SPORT BREMBO	DKS OEM ANTERIORE Front	DKR ANTERIORE Front
	FISSO / Fix		FLOTTANTE / Floating				
	BREMBO	ACCOSSATO	BREMBO	ACCOSSATO			
	68B407E0	DK176					
	68B407E0	DK176					
	68B407E0	DK176					
			78B40828	DK035			
	68B407E0	DK176					
			78B40828	DK035			
	68B407E0	DK176					
	68B407E0	DK176					
	68B407E0	DK176					
			78B40828	DK035			
	68B407E0	DK176					
	68B407E0	DK176					
	68B407E0	DK176					
	68B407E0	DK176					
	68B407E0	DK176					
	68B407E0	DK176					
			78B40828	DK035			
	68B407E0	DK176					
			78B40828	DK035			
			78B40828	DK035			
	68B407E0	DK176					
			78B40828	DK035			
			78B40828	DK035			
			78B40828	DK035			
			78B40828	DK035			
			78B40828	DK035			
	68B407E0	DK176					
			78B40828	DK035			
			78B40828	DK035			
			78B40828	DK035			
			78B40828	DK035			
			78B40828	DK035			
	68B407E0	DK176					
			78B40828	DK035			
	68B407E0	DK176					
			78B40828	DK035			
			78B40828	DK035			
	68B407E0	DK176					
	68B407E0	DK176					
			78B40828	DK035			
	68B407E0	DK176					
			78B40828	DK035			
			78B40828	DK035			
			78B40828	DK035			
			78B40828	DK035			
			78B40828	DK035			
			78B40828	DK035			
			78B40828	DK035			
			78B40828	DK035			
			78B40828	DK035			
			78B40828	DK035			
			78B40828	DK035			
			78B40828	DK035			
			78B40828	DK035			
			78B40828	DK035			
			78B40828	DK035			
			78B40828	DK035			
			78B40828	DK035			
			78B40828	DK035			
			78B40828	DK035			

dischi freno brake rotor

INDICE ANALITICO / index

MARCA / Brand	MODELLO / Model	CC	DA From	A To	DK: ANTERIORE / Front				
					FISSO / Fix		FLOTTANTE / Floating		
					BREMBO	ACCOSSATO	BREMBO	ACCOSSATO	
HARLEY DAVIDSON	FXDL-DYNA-LOW-RIDER	1584	2007	2010					
HARLEY DAVIDSON	FXDWG-DYNA-WIDE-GLIDE	1584	2008	2014					
HARLEY DAVIDSON	FXS-BLACKLINE	1584	2011	2013			78B40891	DK011	
HARLEY DAVIDSON	FXSTB-NIGHT-TRAIN	1584	2008	2010			78B40891	DK011	
HARLEY DAVIDSON	FXSTC-SOFTAIL-CUSTOM	1584	2008	2010			78B40891	DK011	
HARLEY DAVIDSON	FXSTSS-CVO-SOFTAIL-SPRINGER	1584	2009	2009			78B40891	DK011	
HARLEY DAVIDSON	FLD-SWITCHBACK	1690	2012	2014					
HARLEY DAVIDSON	FLS-SOFTAIL-SLIM	1690	2012	2014					
HM									
HM	CRE-F-X	125	2008	→					
HM	CRE-SUPERMOTARD	125	2003	2003					
HM	CRE-SUPERMOTARD	125	2004	2008					
HM	CR-E-SUPERMOTARD	125	2000	2001					
HM	CR-E-SUPERMOTARD	125	2002	2003					
HM	CR-E-SUPERMOTARD	125	2004	2008					
HM	CRM-F-X	125	2008	→					
HM	CRF-ENDURO	230	2004	2010	68B40796	DK036			
HM	CRF-SUPERMOTARD	230	2004	2006					
HM	CRE-F	250	2004	2009	68B40796	DK036			
HM	CRE-SUPERMOTARD	250	2003	2005					
HM	CR-E-SUPERMOTARD	250	2000	2001					
HM	CR-E-SUPERMOTARD	250	2002	2005					
HM	CR-E-SUPERMOTARD	250	2006	2009					
HM	CRE-X	250	2004	2009	68B40796	DK036			
HM	CRE-X-ENDURO	250	2004	2009	68B40796	DK036			
HM	CRF-R-SUPERMOTARD	250	2004	2008					
HM	CRF-X-SUPERMOTARD	250	2004	2008					
HM	CRF-R	450	2002	→	68B40796	DK036			
HM	CRF-R-SUPERMOTARD	450	2002	2003					
HM	CRF-X-SUPERMOTARD	450	2004	2009					
HONDA									
HONDA	CRM	50	1997	2002	68B40769	DK089			
HONDA	AX-1	75	1989	→	68B40769	DK089			
HONDA	CRM	75	1995	1999	68B40769	DK089			
HONDA	CHIOCCIOLA-NES	100	1995	→	68B40740	DK014			
HONDA	@-NES	125	2001	→	68B40740	DK014			
HONDA	CBR-R	125	2003	2009	68B407E9	DK098			
HONDA	CBR-R-REPSOL	125	2003	2009	68B407E9	DK098			
HONDA	CR-E	125	1988	1991	68B40769	DK089			
HONDA	CR-E	125	1992	1994	68B40769	DK089			
HONDA	CR-E	125	1995	1997	68B40796	DK036			
HONDA	CR-E	125	1998	2001	68B40796	DK036			
HONDA	CR-E	125	2002	2008	68B40796	DK036			
HONDA	CRF-SUPERMOTARD	125	2000	2005					
HONDA	CRM	125	1998	→	68B40769	DK089			
HONDA	CR-R	125	1988	1991	68B40769	DK089			
HONDA	CR-R	125	1992	1994	68B40769	DK089			
HONDA	CR-R	125	1995	1997	68B40796	DK036			
HONDA	CR-R	125	1998	2001	68B40796	DK036			
HONDA	CR-R	125	2002	2008	68B40796	DK036			
HONDA	DYLAN	125	2000	2007	68B40740	DK014			
HONDA	FORZA-ABS	125	2015	→	68B407A6	DK059			
HONDA	PANTHEON	125	1998	2002	68B40775	DK058			
HONDA	PANTHEON-FES	125	2003	2007	68B40775	DK058			
HONDA	PSI	125	2006	2008	68B40740	DK014			
HONDA	RS-R	125	1991	2005			78B408A3	DK147	
HONDA	SH-ED	125	2009	→	68B40775	DK058			
HONDA	SH-GT-ABS	125	2012	→	68B40775	DK058			
HONDA	SH-MODE	125	2014	→	68B40740	DK014			
HONDA	S-WING/ABS	125	2007	2011	68B40775	DK058			
HONDA	VARADERO	125	2001	2002					

ACCOSSATO

dischi freno brake rotor

INDICE ANALITICO / index

	DK: POSTERIORE / Rear				DISCO S. SPORT BREMBO	DKS OEM ANTERIORE Front	DKR ANTERIORE Front
	FISSO / Fix		FLOTTANTE / Floating				
	BREMBO	ACCOSSATO	BREMBO	ACCOSSATO			
			78B40828	DK035			
			78B40828	DK035			
			78B40828	DK035			
			78B40828	DK035			
			78B40828	DK035			
			78B40828	DK035			
			78B40828	DK035			
			78B40828	DK035			
HM							
	68B40748	DK156					
	68B40786	DK012					
	68B40786	DK012					
	68B40786	DK012					
	68B40786	DK012					
	68B40786	DK012					
	68B40748	DK156					
	68B40786	DK012					
	68B40786	DK012					
	68B40786	DK012					
	68B40786	DK012					
	68B40786	DK012					
	68B40786	DK012					
	68B40786	DK012					
	68B40786	DK012					
	68B40786	DK012					
	68B40786	DK012					
	68B40786	DK012					
	68B40786	DK012					
HONDA							
	68B40740	DK014					
	68B40740	DK014					
	68B40786	DK012					
	68B40786	DK012					
	68B40786	DK012					
	68B40749	DK003					
	68B40749	DK003					
	68B40780	DK016					
	68B40780	DK016					
	68B40749	DK003					
	68B40740	DK014					

dischi freno brake rotor

INDICE ANALITICO / index

MARCA / Brand	MODELLO / Model	CC	DA From	A To	DK: ANTERIORE / Front			
					FISSO / Fix		FLOTTANTE / Floating	
					BREMBO	ACCOSSATO	BREMBO	ACCOSSATO
HONDA	XLR-R	125	1998	2000	68B40769	DK089		
HONDA	@-NES	150	2001	2006	68B40740	DK014		
HONDA	CRF-F	150	2003	2006	68B40769	DK089		
HONDA	DYLAN	150	2000	2007	68B40740	DK014		
HONDA	PANTHEON	150	1998	2002	68B40775	DK058		
HONDA	PANTHEON-FES	150	2003	2007	68B40775	DK058		
HONDA	PS-I	150	2006	2008	68B40740	DK014		
HONDA	SH	150	1998	2008	68B40740	DK014		
HONDA	SH-ED	150	2009	→	68B40775	DK058		
HONDA	SH-GT-ABS	150	2012	→	68B40775	DK058		
HONDA	S-WING	150	2007	→	68B40775	DK058		
HONDA	CRF-ENDURO	230	2004	2006	68B40796	DK036		
HONDA	CRF-TRIAL	230	2004	2006	68B40769	DK089		
HONDA	SL	230	1998	→	68B40769	DK089		
HONDA	CB	250	1991	2006				
HONDA	CBF	250	2004	2008	68B407H7	DK102		
HONDA	CBR-R	250	2011	2013			78B40838	DK120
HONDA	CBR-R-ABS	250	2011	2013			78B40838	DK120
HONDA	CBR-R-ABS-TRICOLORE	250	2014	→			78B40838	DK120
HONDA	CR-E	250	1988	1991	68B40769	DK089		
HONDA	CR-E	250	1992	1994	68B40769	DK089		
HONDA	CR-E	250	1995	1996	68B40796	DK036		
HONDA	CR-E	250	2002	2008	68B40796	DK036		
HONDA	CRE-F	250	2000	2005				
HONDA	CRF	250	2015	→	68B407N3	DK107		
HONDA	CRF-L	250	2013	→				
HONDA	CRF-R	250	1997	→			78B408A3	DK147
HONDA	CRF-R	250	2004	2014	68B40796	DK036		
HONDA	CRF-R	250	2015	→	68B407N3	DK107		
HONDA	CRF-X	250	2004	2007	68B40796	DK036		
HONDA	CRF-X	250	2008	2012				
HONDA	CRM-R	250	1998	→	68B40769	DK089		
HONDA	CR-R	250	1988	1991	68B40769	DK089		
HONDA	CR-R	250	1992	1994	68B40769	DK089		
HONDA	CR-R	250	1995	1996	68B40796	DK036		
HONDA	CR-R	250	2002	2008	68B40796	DK036		
HONDA	FORESIGHT	250	1997	1999	68B40775	DK058		
HONDA	FORESIGHT	250	2000	2007	68B40775	DK058		
HONDA	FORZA	250	2000	2004	68B40775	DK058		
HONDA	FORZA-X/XE	250	1995	2007	68B40775	DK058		
HONDA	FORZA-X/XE	250	2008	→	68B407A6	DK059		
HONDA	HORNET	250	1997	→			78B408A3	DK147
HONDA	JAZZ	250	2000	2004	68B40775	DK058		
HONDA	NX	250	1988	→	68B40769	DK089		
HONDA	RS-R	250	1990	1997			78B408A3	DK147
HONDA	VTR	250	1998	→				
HONDA	XELVIS	250	1997	1998				
HONDA	XLR-BAJA	250	1988	1991	68B40769	DK089		
HONDA	XLR-BAJA	250	1996	→				
HONDA	XR-R	250	1991	2004	68B40769	DK089		
HONDA	CBR	300	2015	→			78B40838	DK120
HONDA	CBR-ABS	300	2015	→			78B40838	DK120
HONDA	CBR-ABS-HRC-TRICOLORE	300	2014	→			78B40838	DK120
HONDA	CBR-R	300	2014	→			78B40838	DK120
HONDA	CBR-R-ABS	300	2015	→			78B40838	DK120
HONDA	FORZA-ABS	300	2014	→	68B407A6	DK059		
HONDA	FORZA-NSS	300	2012	→	68B407A6	DK059		
HONDA	SH-30-ANNI	300	2015	→	68B407A6	DK059		
HONDA	SH-ABS	300	2006	2015	68B407A6	DK059		
HONDA	SH-I	300	2006	2015	68B407A6	DK059		
HONDA	CB-S-G	350	1987	→	68B407A5	DK013		

	DK: POSTERIORE / Rear				DISCO S. SPORT BREMBO	DKS OEM ANTERIORE Front	DKR ANTERIORE Front
	FISSO / Fix		FLOTTANTE / Floating				
	BREMBO	ACCOSSATO	BREMBO	ACCOSSATO			
	68B40749	DK003					
	68B40780	DK016					
	68B40780	DK016					
	68B40749	DK003					
	68B40780	DK016					
	68B407M0	DK224					
	68B407M0	DK224					
	68B407M0	DK224					
	68B40786	DK012					
	68B40786	DK012					
	68B40786	DK012					
	68B40740	DK014					
	68B40786	DK012					
	68B40786	DK012					
	68B40786	DK012					
	68B40786	DK012					
	68B40786	DK012					
	68B40749	DK003					
	68B40749	DK003					
	68B40780	DK016					
	68B40780	DK016					
	68B40749	DK003					
	68B40749	DK003					
	68B40749	DK003					
	68B40749	DK003					
	68B40748	DK156					
	68B40740	DK014					
	68B40740	DK014					
	68B407M0	DK224					
	68B407M0	DK224					
	68B407M0	DK224					
	68B407M0	DK224					
	68B407M0	DK224					
	68B40780	DK016					
	68B407A6	DK059					
	68B407A6	DK059					
	68B407A6	DK059					

dischi freno brake rotor

INDICE ANALITICO / index

MARCA / Brand	MODELLO / Model	CC	DA From	A To	DK: ANTERIORE / Front			
					FISSO / Fix		FLOTTANTE / Floating	
					BREMBO	ACCOSSATO	BREMBO	ACCOSSATO
HONDA	CB	400	1989	1991				
HONDA	CB-N	400	1982	1988			78B408A3	DK147
HONDA	CBR-F	400	1985	1987			78B408A3	DK147
HONDA	CBR-RR	400	1989	1990			78B408A3	DK147
HONDA	CBR-RR	400	1994	1996			78B408A3	DK147
HONDA	CB-V-TECH	400	2011	→			78B408A3	DK147
HONDA	NSR	400	1985	1988	68B407A6	DK059		
HONDA	SILVER-WING	400	2006	2008	68B407A6	DK059		
HONDA	VFR-R	400	1986	1988	68B407E9	DK098		
HONDA	VFR-R	400	1989	1991			78B408A3	DK147
HONDA	XR-R	400	1995	2005	68B40769	DK089		
HONDA	XR-R	400	2006	2007				
HONDA	XR-SUPERMOTARD	400	2000	2007				
HONDA	XR-R	440	2006	2007				
HONDA	XR-SUPERMOTARD	440	2006	2007				
HONDA	CB-S	450	1985	1989	68B407A5	DK013		
HONDA	CRF	450	2015	→	68B407N3	DK107		
HONDA	CRF R	450	2002	2014	68B40796	DK036		
HONDA	CRF X	450	2004	2012	68B40796	DK036		
HONDA	CR-F-SUPERMOTARD	450	2002	2003				
HONDA	CR-F-SUPERMOTARD	450	2004	→				
HONDA	CB	500	1995	2003				
HONDA	CB-F	500	2004	2008				
HONDA	CB-F	500	2013	→				
HONDA	CBR-R	500	2013	→				
HONDA	CB-S	500	1998	2002				
HONDA	CB-X	500	2013	→				
HONDA	CR	500	1988	1991	68B40769	DK089		
HONDA	CR	500	1992	1994	68B40769	DK089		
HONDA	CR-E	500	1995	2001	68B40796	DK036		
HONDA	CR-R	500	1995	2001	68B40796	DK036		
HONDA	VF-F-F2	500	1983	1987	68B407A6	DK059		
HONDA	XR	500	1991	1993				
HONDA	CBF	600	2004	2007				
HONDA	CBF-N	600	2003	2007				
HONDA	CBF-S-ABS	600	2003	2007				
HONDA	CBR-F	600	1987	1990	68B407E9	DK098		
HONDA	CBR-F	600	1991	1994	68B407E9	DK098		
HONDA	CBR-F	600	1995	1998			78B408A3	DK147
HONDA	CBR-F	600	1999	2000			78B40825	DK116
HONDA	CBR-F	600	2001	2007			78B40823	DK074
HONDA	CBR-F	600	2011	→			78B40824	DK115
HONDA	CBR-F3	600	2003	→			78B40825	DK116
HONDA	CBR-F4	600	2001	2006			78B40823	DK074
HONDA	CBR-F-ABS	600	2011	→			78B40824	DK115
HONDA	CBR-F-SPORT	600	2001	2002			78B40823	DK074
HONDA	CBR-RR	600	2003	→			78B40867	DK015
HONDA	CBR-RR-ABS	600	2009	2012			78B40867	DK015
HONDA	HORNET	600	1998	1999				
HONDA	HORNET	600	2007	2013			78B40824	DK115
HONDA	HORNET/S	600	2000	2006			78B40826	DK075
HONDA	HORNET-ABS	600	2007	2008			78B40824	DK115
HONDA	SILVER-WING	600	2000	2010	68B407A6	DK059		
HONDA	SILVER-WING-ABS	600	2003	→	68B407E9	DK098		
HONDA	XL-R	600	1983	1987	68B40769	DK089		
HONDA	XL-V-TRANSALP	600	1987	1990	68B407E9	DK098		
HONDA	XL-V-TRANSALP	600	1991	1993	68B407E9	DK098		
HONDA	XL-V-TRANSALP	600	1997	1999	68B407A5	DK013		
HONDA	XL-V-TRANSALP-VR/VT	600	1994	1996	68B407E9	DK098		
HONDA	XR-R	600	1988	1999	68B40769	DK089		
HONDA	XR-R-DAKAR	600	1999	→	68B40769	DK089		

ACCOSSATO

dischi freno brake rotor

INDICE ANALITICO / index

	DK: POSTERIORE / Rear				DISCO S. SPORT BREMBO	DKS OEM ANTERIORE Front	DKR ANTERIORE Front
	FISSO / Fix		FLOTTANTE / Floating				
	BREMBO	ACCOSSATO	BREMBO	ACCOSSATO			
	68B40749	DK003					
	68B40749	DK003					
	68B40743	DK153					
	68B40743	DK153					
	68B40780	DK016					
	68B40743	DK153					
	68B40740	DK014					
	68B40740	DK014					
	68B40740	DK014					
	68B40740	DK014					
	68B40740	DK014					
	68B40786	DK012					
	68B40786	DK012					
	68B40786	DK012					
	68B40786	DK012					
	68B40786	DK012					
	68B40780	DK016					
	68B40783	DK166					
	68B407L9	DK223					
	68B407L9	DK223					
	68B40780	DK016					
	68B407L9	DK223					
	68B40740	DK014					
	68B40783	DK166					
	68B40783	DK166					
	68B40783	DK166					
	68B40743	DK153					
	68B40749	DK003					
	68B40749	DK003					
	68B40749	DK003					
	68B40749	DK003					
	68B40783	DK166					
	68B40749	DK003					
	68B40749	DK003					
	68B40783	DK166					
	68B40749	DK003					
	68B40749	DK003			208973746	DKS007	
	68B40749	DK003			208973746	DKS007	
	68B40749	DK003					
	68B40783	DK166					
	68B40749	DK003					
	68B40783	DK166					
	68B40780	DK016					
	68B40780	DK016					
	68B40780	DK016					
	68B40780	DK016					
	68B40780	DK016					
	68B40740	DK014					
	68B40740	DK014					

dischi freno brake rotor

INDICE ANALITICO / index

MARCA / Brand	MODELLO / Model	CC	DA From	A To	DK: ANTERIORE / Front			
					FISSO / Fix		FLOTTANTE / Floating	
					BREMBO	ACCOSSATO	BREMBO	ACCOSSATO
HONDA	CB-F	650	2014	→				
HONDA	CBR-F	650	2014	→				
HONDA	FMX	650	2005	2006				
HONDA	NX-DOMINATOR	650	1988	1992	68B407A5	DK013		
HONDA	NX-DOMINATOR	650	1993	2004	68B407A5	DK013		
HONDA	SLR	650	1997	1999	68B407E9	DK098		
HONDA	VIGOR-FX	650	1999	2001	68B407E9	DK098		
HONDA	XL-V-TRANSALP	650	2000	2007	68B407A5	DK013		
HONDA	XR-L	650	1993	2012	68B407A5	DK013		
HONDA	XR-R	650	1997	1999				
HONDA	XR-R	650	2000	2008	68B40769	DK089		
HONDA	XRV-AFRICA-TWIN	650	1988	1989				
HONDA	CTX	700	2014	→	68B407G7	DK101		
HONDA	CTX-DCTI-ABS	700	2014	→	68B407G7	DK101		
HONDA	CTX-N	700	2014	→	68B407G7	DK101		
HONDA	CTX-N-DCTI-ABS	700	2000	→	68B407G7	DK101		
HONDA	INTEGRA	700	2012	→	68B407G7	DK101		
HONDA	NC-ABS	700	2012	→	68B407G7	DK101		
HONDA	NC-ABS-DCT	700	2012	→	68B407G7	DK101		
HONDA	NC-S	700	2012	→	68B407G7	DK101		
HONDA	NC-X-ABS	700	2012	→	68B407G7	DK101		
HONDA	NC-X-ABS-DCT	700	2012	→	68B407G7	DK101		
HONDA	XL-700-V-TRANSALP	700	2008	2012	68B407A5	DK013		
HONDA	XL-700-V-TRANSALP-ABS	700	2008	2012	68B407A5	DK013		
HONDA	CB-SEVEN-FIFTY	750	1992	1995				
HONDA	CBX-F	750	1984	1988	68B407E9	DK098		
HONDA	INTEGRA-DCT-ABS	750	2014	→				
HONDA	NC-S	750	2014	→	68B407G7	DK101		
HONDA	NC-X	750	2014	→	68B407G7	DK101		
HONDA	VFR-F	750	1985	1987	68B407E9	DK098		
HONDA	VFR-F	750	1988	1989				
HONDA	VFR-F	750	1994	1997			78B408A3	DK147
HONDA	XLV-R	750	1983	1987	68B407E9	DK098		
HONDA	XRV-AFRICA-TWIN	750	1990	2002	68B407C7	DK066		
HONDA	CROSSRUNNER	800	2011	→			78B40825	DK116
HONDA	VFR-INTERCEPTOR	800	1998	2010			78B40825	DK116
HONDA	CBR-RR	900	1992	1993			78B40825	DK116
HONDA	CBR-RR	900	1994	1997			78B408A3	DK147
HONDA	CBR-RR	900	1998	1999				
HONDA	CBR-RR	900	2000	2003			78B40895	DK078
HONDA	HORNET	900	2002	2006			78B40823	DK074
HONDA	CBR-RR	929	1999	2001				
HONDA	CBR-RR	954	2002	2003				
HONDA	CBF	1000	2006	2013				
HONDA	CBF-ABS	1000	2006	2013				
HONDA	CBF-F-ABS	1000	2015	→				
HONDA	CBF-F-ST	1000	2006	2009				
HONDA	CBF-F-ST	1000	2010	2013				
HONDA	CBF-F-ST-ABS	1000	2006	2012				
HONDA	CB-R	1000	2008	→			78B40867	DK015
HONDA	CB-R-ABS	1000	2009	→			78B40867	DK015
HONDA	CBR-F	1000	1993	1997				
HONDA	CBR-RR	1000	2008	→			78B40876	DK207
HONDA	CBR-RR	1000	2004	2005			78B40867	DK015
HONDA	CBR-RR	1000	2006	2007			78B40877	DK135
HONDA	CBR-RR-ABS	1000	2009	→			78B40876	DK207
HONDA	CBR-RR-FIREBLADE	1000	2014	→			78B40876	DK207
HONDA	CBR-RR-SP	1000	2014	→			78B40876	DK207
HONDA	VF-F	1000	1984	1988	68B407E9	DK098		
HONDA	VF-R	1000	1986	1987	68B407E9	DK098		
HONDA	VTR-F	1000	1997	2007			78B408A3	DK147

	DK: POSTERIORE / Rear				DISCO S. SPORT BREMBO	DKS OEM ANTERIORE Front	DKR ANTERIORE Front
	FISSO / Fix		FLOTTANTE / Floating				
	BREMBO	ACCOSSATO	BREMBO	ACCOSSATO			
	68B407L9	DK223					
	68B407L9	DK223					
	68B40748	DK156					
	68B40749	DK003					
	68B40748	DK156					
	68B40748	DK156					
	68B40748	DK156					
	68B40780	DK016					
	68B40749	DK003					
	68B40749	DK003					
	68B40780	DK016					
	68B407G8	DK185					
	68B407G8	DK185					
	68B407G8	DK185					
	68B407G8	DK185					
	68B407G8	DK185					
	68B407G8	DK185					
	68B407G8	DK185					
	68B407G8	DK185					
	68B407G8	DK185					
	68B40780	DK016					
	68B40780	DK016					
	68B40780	DK016					
	68B407G8	DK185					
	68B407G8	DK185					
	68B407G8	DK185					
	68B407A6	DK059					
	68B407A6	DK059					
	68B407M6	DK225					
	68B407A5	DK013					
	68B407M6	DK225					
	68B407M6	DK225					
	68B40749	DK003					
	68B40749	DK003					
	68B40749	DK003					
	68B40780	DK016					
	68B40749	DK003					
	68B40749	DK003					
	68B40783	DK166					
	68B40783	DK166					
	68B40783	DK166					
	68B40783	DK166					
	68B40783	DK166					
	68B40783	DK166					
					208973746	DKS007	
					208973746	DKS007	
	68B407A6	DK059					
	68B40749	DK003					DKR009
	68B40749	DK003			208973746	DKS007	
	68B40749	DK003			208973712	DKS008	
	68B40749	DK003					
	68B40749	DK003					
	68B40749	DK003					
	68B40749	DK003					

dischi freno brake rotor

INDICE ANALITICO / index

MARCA / Brand	MODELLO / Model	CC	DA From	A To	DK: ANTERIORE / Front				
					FISSO / Fix		FLOTTANTE / Floating		
					BREMBO	ACCOSSATO	BREMBO	ACCOSSATO	
HONDA	VTR-SP02	1000	2002	2004			78B40877	DK135	
HONDA	VTR-SP1	1000	2000	2001			78B40877	DK135	
HONDA	XL-L-VARADERO/ABS	1000	2003	2011			78B40825	DK116	
HONDA	XL-VARADERO	1000	1999	2002			78B40825	DK116	
HONDA	CBR-XX	1100	1997	2004					
HONDA	CB-X-11	1100	2000	2003					
HONDA	CROSSTOURER	1200	2012	2014	68B407N0	DK106			
HONDA	CROSSTOURER-DCT-TRAVEL-EDITION	1200	2012	2014	68B407N0	DK106			
HONDA	CROSSTOURER-L	1200	2014	→	68B407N0	DK106			
HONDA	CROSSTOURER-S	1200	2014	→	68B407N0	DK106			
HONDA	VFR	1200	2010	2013					
HONDA	VFR-DCT	1200	2010	2013					
HONDA	CB	1300	2003	2008			78B40867	DK015	
HONDA	GL-C-VALKIRIA	1500	1997	2003			78B40825	DK116	
HONDA	GL-GOLDWING	1800	2001	→			78B40825	DK116	
HRD									
HRD	GS	125	1994	1996					
HRD	GS	125	1997	→					
HRD	MC	125	1994	1996					
HRD	GS	250	1994	1996					
HRD	MC	250	1994	1996					
HUSABERG									
HUSABERG	FE	390	2010	2012	68B407B8	DK017			
HUSABERG	FE	400	2000	2003	68B407B8	DK017			
HUSABERG	FE-E	400	2001	2003	68B407B8	DK017			
HUSABERG	FS-C	400	2001	2003	68B407B8	DK017			
HUSABERG	FS-E	400	2001	2003	68B407B8	DK017			
HUSABERG	FE	450	2010	2012	68B407B8	DK017			
HUSABERG	FS-E	450	2003	2008					
HUSABERG	FX-E	450	2010	→	68B407B8	DK017			
HUSABERG	FC-E	470	2001	2002	68B407B8	DK017			
HUSABERG	CR	501	1999	2003	68B407B8	DK017			
HUSABERG	FC	501	1999	2003	68B407B8	DK017			
HUSABERG	FE-E	501	1999	2004	68B407B8	DK017			
HUSABERG	FE-S	501	1999	2004	68B407B8	DK017			
HUSABERG	FC-E	550	2001	2005	68B407B8	DK017			
HUSABERG	FE-E	550	2004	2008	68B407B8	DK017			
HUSABERG	FE	570	2010	2012	68B407B8	DK017			
HUSABERG	FS	570	2010	→					
HUSABERG	FC	600	1999	2003	68B407B8	DK017			
HUSABERG	FE-E	600	1999	2002	68B407B8	DK017			
HUSABERG	FE-SUPERMOTARD	600	1999	2003					
HUSABERG	FE-E	650	2001	2008	68B407B8	DK017			
HUSABERG	FS-C	650	2001	2008					
HUSABERG	FS-E	650	2001	2008					
HUSABERG	FX-E	650	2001	2005	68B407B8	DK017			
HUSQVARNA									
HUSQVARNA	CR	125	2000	2004			78B40814	DK112	
HUSQVARNA	CR	125	2005	2012			78B40814	DK112	
HUSQVARNA	SM	125	2000	→			78B40814	DK112	
HUSQVARNA	SM-S	125	2003	2012			78B40814	DK112	
HUSQVARNA	SM-S4	125	2010	2011			78B40814	DK112	
HUSQVARNA	TC	125	2014	→	68B407B8	DK017			
HUSQVARNA	TE	125	2010	2012			78B40814	DK112	
HUSQVARNA	TE	125	2014	→	68B407B8	DK017			
HUSQVARNA	WR	125	2000	2005			78B40814	DK112	
HUSQVARNA	WR	125	2006	2012			78B40814	DK112	
HUSQVARNA	WR-E	125	2000	2009			78B40814	DK112	
HUSQVARNA	CR	250	2000	2004			78B40814	DK112	
HUSQVARNA	CR	250	2005	2011			78B40814	DK112	
HUSQVARNA	FC	250	2014	→	68B407B8	DK017			

ACCOSSATO

dischi freno brake rotor

INDICE ANALITICO / index

	DK: POSTERIORE / Rear				DISCO S. SPORT BREMBO	DKS OEM ANTERIORE Front	DKR ANTERIORE Front
	FISSO / Fix		FLOTTANTE / Floating				
	BREMBO	ACCOSSATO	BREMBO	ACCOSSATO			
	68B40749	DK003			208973712	DKS008	
	68B40749	DK003			208973712	DKS008	
	68B407A6	DK059					
	68B407A5	DK013					
	68B407A6	DK059					
	68B407A6	DK059					
	68B407N1	DK197					
	68B407N1	DK197					
	68B407N1	DK197					
	68B407N1	DK197					
	68B407N1	DK197					
	68B407N1	DK197					
	68B407A6	DK059					
HRD							
	68B40756	DK031					
	68B40756	DK031					
	68B40756	DK031					
	68B40756	DK031					
	68B40756	DK031					
HUSABERG							
	68B40752	DK018					
	68B40752	DK018					
	68B40752	DK018					
	68B40752	DK018					
	68B40752	DK018					
	68B40752	DK018					
	68B40752	DK018					
	68B40752	DK018					
	68B40752	DK018					
	68B40752	DK018					
	68B40752	DK018					
	68B40752	DK018					
	68B40752	DK018					
	68B40752	DK018					
	68B40752	DK018					
	68B40752	DK018					
	68B40752	DK018					
	68B40752	DK018					
	68B40752	DK018					
	68B40752	DK018					
HUSQVARNA							
	68B40754	DK160					
	68B40789	DK167					
	68B40754	DK160					
	68B40754	DK160					
	68B40754	DK160					
	68B40752	DK018					
	68B40754	DK160					
	68B40752	DK018					
	68B40754	DK160					
	68B40789	DK167					
	68B40754	DK160					
	68B40754	DK160					
	68B40789	DK167					
	68B40752	DK018					

dischi freno brake rotor

INDICE ANALITICO / index

MARCA / Brand	MODELLO / Model	CC	DA From	A To	DK: ANTERIORE / Front			
					FISSO / Fix		FLOTTANTE / Floating	
					BREMBO	ACCOSSATO	BREMBO	ACCOSSATO
HUSQVARNA	FE	250	2014	→	68B407B8	DK017		
HUSQVARNA	TC	250	2001	2012			78B40814	DK112
HUSQVARNA	TC	250	2014	→	68B407B8	DK017		
HUSQVARNA	TE	250	2004	2006			78B40814	DK112
HUSQVARNA	TE	250	2014	→	68B407B8	DK017		
HUSQVARNA	TXC	250	2011	→			78B40814	DK112
HUSQVARNA	WR	250	2000	2006			78B40814	DK112
HUSQVARNA	WR	250	2007	→			78B40814	DK112
HUSQVARNA	TC	300	2014	→	68B407B8	DK017		
HUSQVARNA	TE	300	2014	→	68B407B8	DK017		
HUSQVARNA	WR	300	2009	→			78B40814	DK112
HUSQVARNA	TE	310	2010	2012			78B40814	DK112
HUSQVARNA	TE-4T	310	2010	2012			78B40814	DK112
HUSQVARNA	TXC	310	2011	→			78B40814	DK112
HUSQVARNA	FC	350	2014	→	68B407B8	DK017		
HUSQVARNA	FE	350	2014	→	68B407B8	DK017		
HUSQVARNA	WR	360	2000	2004			78B40814	DK112
HUSQVARNA	TE	410	2000	2001			78B40814	DK112
HUSQVARNA	SMR	449	2011	2012				
HUSQVARNA	TC-449	449	2011	2013			78B40814	DK112
HUSQVARNA	TE-449	449	2011	2013			78B40814	DK112
HUSQVARNA	FC	450	2014	→	68B407B8	DK017		
HUSQVARNA	FE	450	2014	→	68B407B8	DK017		
HUSQVARNA	SMR	450	2003	2009				
HUSQVARNA	SM-RR	450	2006	2008				
HUSQVARNA	TC	450	2002	2003			78B40814	DK112
HUSQVARNA	TC	450	2004	2010			78B40814	DK112
HUSQVARNA	TE	450	2000	2006			78B40814	DK112
HUSQVARNA	TE	450	2007	2010			78B40814	DK112
HUSQVARNA	TXC	450	2011	2013			78B40814	DK112
HUSQVARNA	TXC	480	2011	2013			78B40814	DK112
HUSQVARNA	FE	501	2014	→	68B407B8	DK017		
HUSQVARNA	SMR	510	2005	2005				
HUSQVARNA	SMR	510	2006	2010				
HUSQVARNA	TC	510	2002	2004			78B40814	DK112
HUSQVARNA	TC	510	2005	2009			78B40814	DK112
HUSQVARNA	TE	510	2002	2004			78B40814	DK112
HUSQVARNA	TE	510	2005	2010			78B40814	DK112
HUSQVARNA	TE-CENTENNIAL	510	2004	→			78B40814	DK112
HUSQVARNA	TXC	510	2011	2012			78B40814	DK112
HUSQVARNA	SMR	511	2011	2012				
HUSQVARNA	TE	511	2011	2013			78B40814	DK112
HUSQVARNA	TXC	511	2011	2013				
HUSQVARNA	SMR	570	2000	→				
HUSQVARNA	SMR	570	2001	2004				
HUSQVARNA	TC	570	2000	2003			78B40814	DK112
HUSQVARNA	TE	570	2001	2004			78B40814	DK112
HUSQVARNA	TC	610	2000	2004			78B40814	DK112
HUSQVARNA	TE	610	2000	2004			78B40814	DK112
HUSQVARNA	TE-E	610	2005	2007			78B40814	DK112
HUSQVARNA	SMR	630	2003	2005				
HUSQVARNA	TE	630	2010	2012			78B40814	DK112
HUSQVARNA	TR-STRADA	650	2013	→	68B407G5	DK100		
HUSQVARNA	TR-TERRA	650	2013	→	68B407G5	DK100		
HUSQVARNA	NUDA-ABS	900	2011	→	68B407H7	DK102		
HUSQVARNA	NUDA-R	900	2011	→	68B407H7	DK102		
HYOSUNG								
HYOSUNG	SUPER-CAB	50	1995	→	68B40714	DK019		
HYOSUNG	SUPER-CAB-PLUS	50	1998	→	68B40714	DK019		
ITALJET								
ITALJET	DRAGSTER	125	1999	2001				

	DK: POSTERIORE / Rear				DISCO S. SPORT BREMBO	DKS OEM ANTERIORE Front	DKR ANTERIORE Front
	FISSO / Fix		FLOTTANTE / Floating				
	BREMBO	ACCOSSATO	BREMBO	ACCOSSATO			
	68B40752	DK018					
	68B40789	DK167					
	68B40752	DK018					
	68B40754	DK160					
	68B40752	DK018					
	68B40789	DK167					
	68B40754	DK160					
	68B40789	DK167					
	68B40752	DK018					
	68B40754	DK160					
	68B40789	DK167					
	68B40789	DK167					
	68B40789	DK167					
	68B40752	DK018					
	68B40752	DK018					
	68B40754	DK160					
	68B40754	DK160					
	68B40789	DK167					
	68B40789	DK167					
	68B40789	DK167					
	68B40752	DK018					
	68B40752	DK018					
	68B40754	DK160					
	68B40789	DK167					
	68B40754	DK160					
	68B40789	DK167					
	68B40754	DK160					
	68B40789	DK167					
	68B40789	DK167					
	68B40789	DK167					
	68B40752	DK018					
	68B40754	DK160					
	68B40789	DK167					
	68B40754	DK160					
	68B40789	DK167					
	68B40754	DK160					
	68B40789	DK167					
	68B40754	DK160					
	68B40789	DK167					
	68B40789	DK167					
	68B40789	DK167					
	68B40789	DK167					
	68B40754	DK160					
	68B40754	DK160					
	68B40754	DK160					
	68B40754	DK160					
	68B40754	DK160					
	68B40754	DK160					
	68B40754	DK160					
	68B40754	DK160					
	68B40754	DK160					
	68B40781	DK165					
	68B40781	DK165					
	68B407C0	DK004					
	68B407C0	DK004					
HYOSUNG							
ITALJET							
	68B40776	DK091					

dischi freno brake rotor

INDICE ANALITICO / index

ACCOSSATO

MARCA / Brand	MODELLO / Model	CC	DA From	A To	DK: ANTERIORE / Front				
					FISSO / Fix		FLOTTANTE / Floating		
					BREMBO	ACCOSSATO	BREMBO	ACCOSSATO	
ITALJET	DRAGSTER	180	1999	2001					
ITALJET	JUPITER	250	2000	→	68B407C9	DK082			
KAWASAKI									
KAWASAKI	KX	125	1988	2002					
KAWASAKI	KX	125	2003	2005					
KAWASAKI	KX	125	2006	2008			78B40811	DK109	
KAWASAKI	KDX	200	2004	2006					
KAWASAKI	KDX	220	2003	2005					
KAWASAKI	KLX	250	2014	→			78B40811	DK109	
KAWASAKI	KX	250	1987	2002					
KAWASAKI	KX	250	2003	2005					
KAWASAKI	KX	250	2006	2008			78B40811	DK109	
KAWASAKI	KXE-F	250	2006	2007			78B40811	DK109	
KAWASAKI	KX-F	250	2004	2005					
KAWASAKI	KX-F	250	2006	2013			78B40811	DK109	
KAWASAKI	KX-F	250	2014	→					
KAWASAKI	Z-SL	250	2015	→	68B407L2	DK104			
KAWASAKI	ZZR	250	1992	→			78B40841	DK038	
KAWASAKI	J	300	2014	→			78B40819	DK072	
KAWASAKI	KLX	300	1996	2007					
KAWASAKI	NINJA-ABS	300	2013	→	68B407L2	DK104			
KAWASAKI	Z-ABS	300	2015	→	68B407L2	DK104			
KAWASAKI	ZXR	400	1989	1990			78B40841	DK038	
KAWASAKI	ZXR	400	1991	2002					
KAWASAKI	KLX-F	450	2007	2009			78B40811	DK109	
KAWASAKI	KLX-R	450	2006	→			78B40811	DK109	
KAWASAKI	KXE-F	450	2006	2007			78B40811	DK109	
KAWASAKI	KX-F	450	2006	2014			78B40811	DK109	
KAWASAKI	KX-F	450	2015	→					
KAWASAKI	KX	500	1990	2004					
KAWASAKI	ZR-ZEPHYR	550	1993	2001			78B40841	DK038	
KAWASAKI	ZL-ELIMINATOR	600	1995	1999			78B40841	DK038	
KAWASAKI	ZX-6R	600	2013	→			78B40840	DK051	
KAWASAKI	ZX-6R	600	1995	1997			78B40841	DK038	
KAWASAKI	ZX-6R	600	1998	2002			78B40841	DK038	
KAWASAKI	ZX-6R	600	2007	2012			78B40840	DK051	
KAWASAKI	ZX-6RR	600	2003	2004			78B40815	DK070	
KAWASAKI	ZX-6RR	600	2005	2006			78B40840	DK051	
KAWASAKI	ZZR	600	1990	1992			78B40841	DK038	
KAWASAKI	ZZR	600	1993	2006			78B40841	DK038	
KAWASAKI	ZX-6R	636	2002	2002			78B40841	DK038	
KAWASAKI	ZX-6R	636	2003	2004			78B40815	DK070	
KAWASAKI	ZX-6R	636	2005	2006			78B40840	DK051	
KAWASAKI	ZX-6R-ABS	636	2013	→			78B40861	DK052	
KAWASAKI	ZX-6-RR	636	2003	2006					
KAWASAKI	ER-6F	650	2006	→			78B40840	DK051	
KAWASAKI	ER-6N	650	2006	→			78B40840	DK051	
KAWASAKI	KLX-R	650	1993	2003					
KAWASAKI	VERSYS	650	2007	2014			78B40840	DK051	
KAWASAKI	VERSYS-ABS	650	2007	2014					
KAWASAKI	GPX-R	750	1986	1990					
KAWASAKI	Z-750	750	2004	2006			78B40841	DK038	
KAWASAKI	Z-750-ABS	750	2007	→			78B40840	DK051	
KAWASAKI	Z-750-R	750	2011	2012			78B40840	DK051	
KAWASAKI	Z-750-R-ABS	750	2011	2012			78B40840	DK051	
KAWASAKI	Z-750-S	750	2005	2006			78B40841	DK038	
KAWASAKI	ZEPHYR	750	1991	2003			78B40841	DK038	
KAWASAKI	ZR-7	750	1999	2003			78B40841	DK038	
KAWASAKI	ZR-7S	750	1999	2003			78B40841	DK038	
KAWASAKI	ZX-7R	750	1996	2002			78B408A1	DK145	
KAWASAKI	ZX-7R	750	1999	2003					

	DK: POSTERIORE / Rear				DISCO S. SPORT BREMBO	DKS OEM ANTERIORE Front	DKR ANTERIORE Front
	FISSO / Fix		FLOTTANTE / Floating				
	BREMBO	ACCOSSATO	BREMBO	ACCOSSATO			
	68B40776	DK091					
				KAWASAKI			
	68B40746	DK155					
	68B40782	DK214					
	68B40782	DK214					
	68B40746	DK155					
	68B40746	DK155					
	68B40746	DK155					
	68B40782	DK214					
	68B40782	DK214					
	68B40782	DK214					
	68B40782	DK214					
	68B40782	DK214					
	68B40782	DK214					
	68B407N1	DK197					
	68B407K4	DK084					
	68B40746	DK155					
					108973757	DKS018	
	68B407N1	DK197					
	68B40779	DK164					
	68B40782	DK214					
	68B40782	DK214					
	68B40782	DK214					
	68B40782	DK214					
	68B40746	DK155					
	68B40779	DK164					
	68B40747	DK050			208973714	DKS010	
	68B40747	DK050					
	68B40747	DK050			208973714	DKS010	
	68B40747	DK050					
	68B40747	DK050			208973714	DKS010	
	68B40779	DK164					
	68B40747	DK050					
	68B40747	DK050					
	68B40747	DK050			208973714	DKS010	
	68B40747	DK050			208973734	DKS011	
	68B40747	DK050					
	68B40747	DK050					
	68B40747	DK050					
	68B40746	DK155					
	68B40747	DK050					
	68B40747	DK050					
	68B40779	DK164					
	68B40747	DK050					
	68B407A3	DK171			208973714	DKS010	
	68B407A3	DK171			208973714	DKS010	
	68B407A3	DK171			208973714	DKS010	
	68B40747	DK050					
	68B40779	DK164					
	68B40779	DK164					
	68B40761	DK039					
	68B40761	DK039					

dischi freno brake rotor

INDICE ANALITICO / index

MARCA / Brand	MODELLO / Model	CC	DA From	A To	DK: ANTERIORE / Front				
					FISSO / Fix		FLOTTANTE / Floating		
					BREMBO	ACCOSSATO	BREMBO	ACCOSSATO	
KAWASAKI	ZX-7-RR	750	1993	2004			78B408A1	DK145	
KAWASAKI	ZXR	750	1989	1990			78B40899	DK042	
KAWASAKI	ZXR	750	1991	1995			78B408A1	DK145	
KAWASAKI	ZXR-R	750	1989	1995					
KAWASAKI	Z-800	800	2013	→			78B40861	DK052	
KAWASAKI	Z-800-ABS	800	2013	→			78B40861	DK052	
KAWASAKI	Z-800-E	800	2013	→			78B40861	DK052	
KAWASAKI	GPZ-R	900	1990	2003			78B40841	DK038	
KAWASAKI	ZX-9R	900	1994	1997			78B408A1	DK145	
KAWASAKI	ZX-9R	900	1998	1999					
KAWASAKI	ZX-9R	900	2000	2001			78B40899	DK042	
KAWASAKI	ZX-9R	900	2002	2004			78B408A1	DK145	
KAWASAKI	GTR	1000	1986	1993					
KAWASAKI	GTR	1000	1994	2006			78B40841	DK038	
KAWASAKI	KLV	1000	2004	2007			78B40865	DK129	
KAWASAKI	VERSYS	1000	2012	2014			78B40840	DK051	
KAWASAKI	Z	1000	2003	2006			78B40841	DK038	
KAWASAKI	Z	1000	2007	→			78B40840	DK051	
KAWASAKI	Z1000	1000	2007	→			78B40840	DK051	
KAWASAKI	Z-SX	1000	2011	→			78B40840	DK051	
KAWASAKI	Z-SX-ABS	1000	2011	→			78B40840	DK051	
KAWASAKI	ZX-10-R	1000	2004	2010			78B40840	DK051	
KAWASAKI	ZX-10-R-(ABS)	1000	2011	→			78B40861	DK052	
KAWASAKI	GPZ	1100	1995	1998			78B40841	DK038	
KAWASAKI	ZEPHYR	1100	1992	1998			78B40899	DK042	
KAWASAKI	ZRX	1100	1997	2000			78B40899	DK042	
KAWASAKI	ZZE	1100	1993	2001			78B408A1	DK145	
KAWASAKI	ZZR	1100	1990	1992			78B40899	DK042	
KAWASAKI	ZX1200	1200	2001	2008			78B40899	DK042	
KAWASAKI	ZX12R-NINJA	1200	2000	2004			78B408A1	DK145	
KAWASAKI	ZX12R-NINJA	1200	2005	2006			78B40841	DK038	
KAWASAKI	ZZR	1200	2002	2004			78B408A1	DK145	
KAWASAKI	GTR	1400	2007	2011			78B40861	DK052	
KAWASAKI	ZZR	1400	2006	→			78B40861	DK052	
KAWASAKI	ZZR-ABS	1400	2006	→			78B40861	DK052	
KAWASAKI	VN	1500	2002	2004			78B408A1	DK145	
KAWASAKI	M1600	1600	2004	2005			78B408A1	DK145	
KAWASAKI	VN	1600	2004	2008			78B408A1	DK145	
KEEWAY									
KEEWAY	OUTLOOK	125	2008	→	68B40740	DK014			
KEEWAY	OUTLOOK	151	2008	→	68B40740	DK014			
KL									
KL	HELIOS	50	1998	→	68B40717	DK227			
KL	KRYPTON	50	1999	→	68B40717	DK227			
KL	XR7	50	1998	→	68B40717	DK227			
KL	NOX	125	2000	2001	68B40717	DK227			
KL	PROXY	125	2001	→	68B40717	DK227			
KL	PULSAR	125	2000	→	68B40717	DK227			
KL	NOX	150	2000	→	68B40717	DK227			
KL	PROXY	150	2001	→	68B40717	DK227			
KL	PULSAR	150	2000	→	68B40717	DK227			
KTM									
KTM	EXC	125	1998	→	68B407B8	DK017			
KTM	EXC-SIX-DAYS	125	2009	→	68B407B8	DK017			
KTM	GS	125	1988	1992					
KTM	GS	125	1993	1997	68B407B8	DK017			
KTM	MX	125	1989	1992	68B407B8	DK017			
KTM	STING	125	1998	→					
KTM	SX	125	1993	→	68B407B8	DK017			
KTM	SXS	125	2000	2010	68B407B8	DK017			
KTM	SX	144	2007	2010	68B407B8	DK017			

ACCOSSATO

dischi freno brake rotor

INDICE ANALITICO / index

	DK: POSTERIORE / Rear				DISCO S. SPORT BREMBO	DKS OEM ANTERIORE Front	DKR ANTERIORE Front
	FISSO / Fix		FLOTTANTE / Floating				
	BREMBO	ACCOSSATO	BREMBO	ACCOSSATO			
	68B40761	DK039					
	68B40761	DK039					
	68B407J3	DK195			208973734	DKS011	
	68B407J3	DK195			208973734	DKS011	
	68B407J3	DK195			208973734	DKS011	
	68B40761	DK039					
	68B40747	DK050					
	68B40747	DK050					
	68B40747	DK050					
	68B40761	DK039					
	68B407E3	DK177					
	68B407A3	DK171					
	68B40747	DK050					
	68B407A3	DK171			208973714	DKS010	
	68B407A3	DK171			208973714	DKS010	
	68B407A3	DK171			208973714	DKS010	
	68B407A3	DK171			208973714	DKS010	
	68B40747	DK050			208973714	DKS010	
	68B40747	DK050			208973734	DKS011	
	68B40761	DK039					
					208973734	DKS011	
	68B407A3	DK171			208973734	DKS011	
	68B407A3	DK171			208973734	DKS011	
KEEWAY							
	68B40740	DK014					
	68B40740	DK014					
KL							
KTM							
	68B40752	DK018					
	68B40752	DK018					
	68B40752	DK018					
	68B40752	DK018					
	68B40752	DK018					
	68B40752	DK018					
	68B40752	DK018					
	68B40752	DK018					
	68B40752	DK018					

dischi freno brake rotor

INDICE ANALITICO / index

MARCA / Brand	MODELLO / Model	CC	DA From	A To	DK: ANTERIORE / Front				
					FISSO / Fix		FLOTTANTE / Floating		
					BREMBO	ACCOSSATO	BREMBO	ACCOSSATO	
KTM	SX	150	2008	→	68B407B8	DK017			
KTM	EXC	200	1998	→	68B407B8	DK017			
KTM	EXC-SIX-DAYS	200	2015	→	68B407B8	DK017			
KTM	MXC	200	1998	2003	68B407B8	DK017			
KTM	SX	200	2003	2009	68B407B8	DK017			
KTM	XC-W	200	2006	2009	68B407B8	DK017			
KTM	EXC	250	1998	→	68B407B8	DK017			
KTM	EXC-F	250	2003	2003	68B407B8	DK017			
KTM	EXC-F	250	2004	→	68B407B8	DK017			
KTM	EXC-F-SIX-DAYS	250	2009	→	68B407B8	DK017			
KTM	EXC-G	250	2004	2009	68B407B8	DK017			
KTM	EXC-SIX-DAYS	250	2009	→	68B407B8	DK017			
KTM	GS	250	1988	1992					
KTM	GS	250	1993	1997	68B407B8	DK017			
KTM	MX	250	1989	1991					
KTM	MX	250	1992	→	68B407B8	DK017			
KTM	MXC	250	1998	2003	68B407B8	DK017			
KTM	SX	250	1993	1997	68B407B8	DK017			
KTM	SX	250	1998	→	68B407B8	DK017			
KTM	SX-F	250	2003	→	68B407B8	DK017			
KTM	SXS	250	2003	2010	68B407B8	DK017			
KTM	SXS-F	250	2006	2009	68B407B8	DK017			
KTM	XC-F	250	2007	2012	68B407B8	DK017			
KTM	XC-W	250	2006	2012	68B407B8	DK017			
KTM	EXC	300	1997	→	68B407B8	DK017			
KTM	EXC-SIX-DAYS	300	2009	→	68B407B8	DK017			
KTM	GS	300	1991	1996	68B407B8	DK017			
KTM	MX	300	1991	1992	68B407B8	DK017			
KTM	MXC	300	1998	2005	68B407B8	DK017			
KTM	SX	300	1993	1996	68B407B8	DK017			
KTM	SX	300	1997	2003	68B407B8	DK017			
KTM	XC	300	2006	2012	68B407B8	DK017			
KTM	XC-W	300	2006	2012	68B407B8	DK017			
KTM	EXC-F	350	2010	→	68B407B8	DK017			
KTM	EXC-F-SIX-DAYS	350	2011	→	68B407B8	DK017			
KTM	GS	350	1993	→	68B407B8	DK017			
KTM	SXF	350	2011	→	68B407B8	DK017			
KTM	EXC	380	1998	2002	68B407B8	DK017			
KTM	MXC	380	1998	2001	68B407B8	DK017			
KTM	SX	380	1998	2002	68B407B8	DK017			
KTM	EGS	400	1996	1999					
KTM	EXC	400	1994	2011	68B407B8	DK017			
KTM	SX	400	2000	2002	68B407B8	DK017			
KTM	XC-W	400	2007	2009	68B407B8	DK017			
KTM	EXC	450	2003	→	68B407B8	DK017			
KTM	EXC-R	450	2008	2009	68B407B8	DK017			
KTM	EXC-SIX-DAYS	450	2009	→	68B407B8	DK017			
KTM	MXC	450	2003	2006	68B407B8	DK017			
KTM	SMR	450	2004	2008					
KTM	SXF	450	2003	→	68B407B8	DK017			
KTM	SXS	450	2003	2010	68B407B8	DK017			
KTM	SXS-F	450	2003	2010	68B407B8	DK017			
KTM	XC	450	2006	2009	68B407B8	DK017			
KTM	XC-F	450	2007	2009	68B407B8	DK017			
KTM	XC-W	450	2007	2009	68B407B8	DK017			
KTM	EXC	500	2010	→	68B407B8	DK017			
KTM	EXC-SIX-DAYS	500	2011	→	68B407B8	DK017			
KTM	MX	500	1989	1993	68B407B8	DK017			
KTM	SX	500	1993	1995	68B407B8	DK017			
KTM	SX-F	505	2007	2009	68B407B8	DK017			
KTM	XC-F	505	2007	2009	68B407B8	DK017			

	DK: POSTERIORE / Rear				DISCO S. SPORT BREMBO	DKS OEM ANTERIORE Front	DKR ANTERIORE Front
	FISSO / Fix		FLOTTANTE / Floating				
	BREMBO	ACCOSSATO	BREMBO	ACCOSSATO			
	68B40752	DK018					
	68B40752	DK018					
	68B40752	DK018					
	68B40752	DK018					
	68B40752	DK018					
	68B40752	DK018					
	68B40752	DK018					
	68B40752	DK018					
	68B40752	DK018					
	68B40752	DK018					
	68B40752	DK018					
	68B40752	DK018					
	68B40752	DK018

dischi freno brake rotor

INDICE ANALITICO / index

MARCA / Brand	MODELLO / Model	CC	DA From	A To	DK: ANTERIORE / Front			
					FISSO / Fix		FLOTTANTE / Floating	
					BREMBO	ACCOSSATO	BREMBO	ACCOSSATO
KTM	EXC	520	2000	2002	68B407B8	DK017		
KTM	MXC	520	2001	2002	68B407B8	DK017		
KTM	SX-RACING	520	2000	2002	68B407B8	DK017		
KTM	EXC	525	2003	2008	68B407B8	DK017		
KTM	MXC	525	2003	2005	68B407B8	DK017		
KTM	SMR	525	2004	2005				
KTM	SX	525	2003	2006	68B407B8	DK017		
KTM	SX-RACING	525	2005	2006	68B407B8	DK017		
KTM	XC	525	2006	2008	68B407B8	DK017		
KTM	XCG	525	2006	2008	68B407B8	DK017		
KTM	XCW	525	2006	2008	68B407B8	DK017		
KTM	EXC	530	2010	2011	68B407B8	DK017		
KTM	EXC-R	530	2008	2009	68B407B8	DK017		
KTM	EXC-SIX-DAYS	530	2009	→	68B407B8	DK017		
KTM	SXC	540	1998	2000	68B407B8	DK017		
KTM	SXS	540	2001	2006	68B407B8	DK017		
KTM	SMR	560	2006	2008				
KTM	GS-4T	600	1993	→	68B407B8	DK017		
KTM	LC4	600	1990	1993	68B407B8	DK017		
KTM	MX	600	1990	1992	68B407B8	DK017		
KTM	ADVENTURE	620	1997	1998				
KTM	DUKE-4T	620	1995	1997				
KTM	DUKE-4T	620	1998	→				
KTM	EGS-LC4	620	1996	2002				
KTM	LC4-SC-SUPERCOMPETITION	620	1998	2004	68B407B8	DK017		
KTM	LC4-SXC-SUPERMOTO	620	1999	2001	68B407B8	DK017		
KTM	LC4-SC-SUPERCOMPETITION	625	2002	→	68B407B8	DK017		
KTM	LC4-SC-SUPERCOMPETITION	625	2003	2004				
KTM	SMC	625	2005	2008				
KTM	SXC	625	2003	2008	68B407B8	DK017		
KTM	DUKE-II	640	1999	2002				
KTM	DUKE-II	640	2003	2006			78B40870	DK022
KTM	LC4-ADVENTURE	640	1998	2007				
KTM	LC4-ENDURO	640	1998	2007				
KTM	LC4-SUPERMOTO	640	1998	2004				
KTM	LC4-SUPERMOTO	640	2005	2005			78B40870	DK022
KTM	LC4-SUPERMOTO	640	2006	→				
KTM	SMC	660	2003	2007				
KTM	DUKE	690	2008	2013			78B40870	DK022
KTM	DUKE	690	2014	→				
KTM	DUKE-ABS	690	2012	2012			78B40870	DK022
KTM	DUKE-R	690	2014	→			78B40870	DK022
KTM	ENDURO-R	690	2014	→			78B408A5	DK149
KTM	SM	690	2007	→			78B40870	DK022
KTM	SMC-R	690	2014	→			78B408A8	DK209
KTM	SM-PRESTIGE	690	2008	2009			78B40870	DK022
KTM	SM-R	690	2008	→			78B40870	DK022
KTM	SMR-R	690	2014	→			78B408A8	DK209
KTM	SUPERMOTO	690	2007	2008				
KTM	LC8-ADVENTURE	950	2002	2006				
KTM	LC8-ADVENTURE-S	950	2002	2006				
KTM	SUPERENDURO-R	950	2006	2008				
KTM	SUPERMOTO	950	2005	2007				
KTM	SUPERMOTO-R	950	2006	2008			78B408A7	DK208
KTM	LC8-ADVENTURE-R	990	2010	2012			78B408A5	DK149
KTM	LC8-ADVENTURE-S	990	2006	2008			78B408A5	DK149
KTM	LC8-ADVENTURE-S/ABS	990	2006	2008			78B408A5	DK149
KTM	SUPER-DUKE	990	2005	2011			78B40870	DK022
KTM	SUPERDUKE-R	990	2007	2011			78B40870	DK022
KTM	SUPERMOTO	990	2007	2012				
KTM	SUPERMOTO-R	990	2010	2012			78B408A7	DK208

ACCOSSATO

dischi freno brake rotor

INDICE ANALITICO / index

	DK: POSTERIORE / Rear				DISCO S. SPORT BREMBO	DKS OEM ANTERIORE Front	DKR ANTERIORE Front
	FISSO / Fix		FLOTTANTE / Floating				
	BREMBO	ACCOSSATO	BREMBO	ACCOSSATO			
	68B40752	DK018					
	68B40752	DK018					
	68B40752	DK018	

dischi freno brake rotor

INDICE ANALITICO / index

MARCA / Brand	MODELLO / Model	CC	DA From	A To	DK: ANTERIORE / Front				
					FISSO / Fix		FLOTTANTE / Floating		
					BREMBO	ACCOSSATO	BREMBO	ACCOSSATO	
KTM	ADVENTURE	1050	2015	→			78B40878	DK053	
KTM	RC8	1190	2008	2009			78B40870	DK022	
KTM	SUPER-ADVENTURE	1290	2015	→			78B40878	DK053	
KYMCO									
KYMCO	AGILITY-R10"	50	2006	→	68B40714	DK019			
KYMCO	AGILITY-R12	50	2006	2011	68B40714	DK019			
KYMCO	AGILITY-R16	50	2008	→	68B407B2	DK020			
KYMCO	B&W	50	2001	2002	68B40730	DK010			
KYMCO	B&W	50	2003	2006	68B40731	DK021			
KYMCO	DINK	50	1998	2002	68B40714	DK019			
KYMCO	DINK	50	2008	→	68B40771	DK040			
KYMCO	DINK-CLASSIC	50	2003	2007	68B40731	DK021			
KYMCO	DINK-SPORTS	50	2002	2006	68B40731	DK021			
KYMCO	FEVER-ZX	50	1999	→	68B40714	DK019			
KYMCO	MAXXER	50	2002	2003	68B40714	DK019			
KYMCO	NEW-DINK	50	2008	→	68B40771	DK040			
KYMCO	PEOPLE	50	1999	2011	68B40757	DK061			
KYMCO	PEOPLE-S	50	2005	→	68B407B2	DK020			
KYMCO	SUPER-9	50	2002	→					
KYMCO	SUPER-9-L.C.	50	2002	→					
KYMCO	TOP-BOY	50	1999	2006	68B40714	DK019			
KYMCO	VITALITY	50	2008	→	68B40714	DK019			
KYMCO	YUP	50	2000	→	68B40714	DK019			
KYMCO	YUP-SP	50	2000	→	68B40714	DK019			
KYMCO	YUP-SP	90	1995	→	68B40714	DK019			
KYMCO	AGILITY-16-PLUS	125	2014	→	68B407B2	DK020			
KYMCO	AGILITY-R-12"	125	2006	2010	68B40714	DK019			
KYMCO	AGILITY-R-16	125	2008	2014	68B407B2	DK020			
KYMCO	B&W	125	2000	→	68B40731	DK021			
KYMCO	DINK	125	1998	2004	68B40714	DK019			
KYMCO	DINK-CLASSIC	125	2002	→	68B40731	DK021			
KYMCO	DINK-LX	125	1999	2001	68B40714	DK019			
KYMCO	DOWNTOWN	125	2009	2014			78B40819	DK072	
KYMCO	DOWNTOWN-I	125	2015	→			78B40819	DK072	
KYMCO	GRAND-DINK	125	2002	2007	68B40731	DK021			
KYMCO	K-XCTI	125	2013	→			78B40819	DK072	
KYMCO	LIKE	125	2009	→					
KYMCO	MAXXER	125	2002	2003					
KYMCO	MOVIE-XL	125	1999	2009	68B40731	DK021			
KYMCO	PEOPLE	125	1999	2011	68B40757	DK061			
KYMCO	PEOPLE-GTI	125	2010	→	68B40794	DK063			
KYMCO	PEOPLE-ONE-125DD	125	2014	→					
KYMCO	PEOPLE-S	125	2005	2006	68B407B2	DK020			
KYMCO	PEOPLE-S	125	2007	→	68B407B2	DK020			
KYMCO	SUPER-DINK	125	2009	2013					
KYMCO	AGILITY-R16	150	2008	2012	68B407B2	DK020			
KYMCO	B&W	150	2000	→	68B40731	DK021			
KYMCO	DINK	150	1998	2001	68B40714	DK019			
KYMCO	DINK-CLASSIC	150	2002	2003	68B40731	DK021			
KYMCO	DINK-LX	150	1998	2001	68B40714	DK019			
KYMCO	GRAND-DINK	150	2002	2007	68B40731	DK021			
KYMCO	MAXXER	150	2002	2003					
KYMCO	MOVIE-XL	150	2001	→	68B40731	DK021			
KYMCO	PEOPLE	150	1999	2004	68B40757	DK061			
KYMCO	AGILITY-16-PLUS	200	2014	→	68B407B2	DK020			
KYMCO	AGILITY-R16	200	2009	2014	68B407B2	DK020			
KYMCO	DINK-CLASSIC	200	2003	→	68B40731	DK021			
KYMCO	DOWNTOWN-I	200	2010	2014			78B40819	DK072	
KYMCO	LIKE-200-I	200	2009	→					
KYMCO	NEW-DINK	200	2008	→	68B40795	DK023			
KYMCO	PEOPLE-GTI	200	2010	→	68B40794	DK063			

ACCOSSATO

dischi freno brake rotor

INDICE ANALITICO / index

	DK: POSTERIORE / Rear				DISCO S. SPORT BREMBO	DKS OEM ANTERIORE Front	DKR ANTERIORE Front
	FISSO / Fix		FLOTTANTE / Floating				
	BREMBO	ACCOSSATO	BREMBO	ACCOSSATO			
					208973710	DKS004	
KYMCO							
	68B40714	DK019					
	68B40714	DK019					
	68B40714	DK019					
	68B40795	DK023					
	68B40795	DK023					
	68B40714	DK019					
	68B40714	DK019					
	68B40714	DK019					
	68B40714	DK019					
	68B40795	DK023					
	68B40771	DK040					
	68B40724	DK210					
	68B40771	DK040					
	68B407D8	DK083					
	68B40714	DK019					
	68B40794	DK063					
	68B407D8	DK083					
	68B407B2	DK020					
	68B40771	DK040					
	68B40795	DK023					
	68B40714	DK019					
	68B40714	DK019					
	68B40714	DK019					
	68B40724	DK210					
	68B40714	DK019					
	68B40795	DK023					
	68B40795	DK023					
	68B40714	DK019					
	68B40795	DK023					
	68B407D8	DK083					
	68B40724	DK210					
	68B40794	DK063					

dischi freno brake rotor

INDICE ANALITICO / index

MARCA / Brand	MODELLO / Model	CC	DA From	A To	DK: ANTERIORE / Front				
					FISSO / Fix		FLOTTANTE / Floating		
					BREMBO	ACCOSSATO	BREMBO	ACCOSSATO	
KYMCO	PEOPLE-S	200	2005	2006	68B407B2	DK020			
KYMCO	PEOPLE-S	200	2007	→	68B407B2	DK020			
KYMCO	B&W	250	2000	2006	68B40731	DK021			
KYMCO	GRAND-DINK	250	2000	2006	68B40731	DK021			
KYMCO	PEOPLE-S	250	2002	2005	68B407B2	DK020			
KYMCO	PEOPLE-S	250	2006	2009	68B407B2	DK020			
KYMCO	XCITING	250	2005	2008	68B407E1	DK024			
KYMCO	YUP	250	2003	→	68B40731	DK021			
KYMCO	DOWNTOWN-I	300	2009	2014			78B40819	DK072	
KYMCO	DOWNTOWN-I-ABS	300	2010	2014			78B40819	DK072	
KYMCO	G-DINK	300	2012	→	68B40795	DK023			
KYMCO	K-XCTI	300	2012	→			78B40819	DK072	
KYMCO	MXU	300	2006	→					
KYMCO	PEOPLE-GTI	300	2010	→	68B40794	DK063			
KYMCO	PEOPLE-GTI-ABS	300	2014	→	68B40794	DK063			
KYMCO	PEOPLE-S	300	2008	2010	68B407B2	DK020			
KYMCO	PEOPLE-SI	300	2008	2010	68B407B2	DK020			
KYMCO	SUPER-DINK	300	2009	2012			78B40819	DK072	
KYMCO	XCITING	300	2008	2011	68B407E1	DK024			
KYMCO	XCITING-R	300	2008	2011	68B407E1	DK024			
KYMCO	XCITING-RI	300	2008	2009	68B407E1	DK024			
KYMCO	DOWNTOWN-I-ABS	350	2015	→			78B40819	DK072	
KYMCO	XCITING	400	2012	2014					
KYMCO	XCITING-ABS	400	2012	→					
KYMCO	XCITING	500	2004	2009	68B407E1	DK024			
KYMCO	XCITING-R	500	2007	2011	68B407E1	DK024			
LAVERDA									
LAVERDA	GHOST	650	1996	1999			78B40870	DK022	
LAVERDA	SPORT	650	1995	2001			78B40870	DK022	
LAVERDA	DIAMANTE	668	1996	1998			78B40870	DK022	
LAVERDA	STRIKE	668	1997	1999			78B40870	DK022	
LAVERDA	BLACK-STRIKE	750	2000	→			78B40870	DK022	
LAVERDA	FORMULA	750	1997	1998			78B40870	DK022	
LAVERDA	FORMULA	750	1999	2001					
LAVERDA	SPORT	750	1997	1998			78B40870	DK022	
LAVERDA	STRIKE	750	1998	2001			78B40870	DK022	
LAVERDA	SUPER-SPORT	750	1999	2000					
LAVERDA	T-8	800	1998	→			78B40870	DK022	
LAVERDA	TSS	800	1998	→			78B40870	DK022	
LAVERDA	SFC-LIMITED-EDITION	1000	2003	→					
LEM									
LEM	STAR-DE-LUXE	150	2009	→	68B40722	DK026			
LML									
LML	STAR-2T	125	2010	→	68B40722	DK026			
LML	STAR-4T	125	2010	→	68B40722	DK026			
LML	STAR-DELUXE	125	2009	→	68B40722	DK026			
LML	STAR-2T	150	2010	→	68B40722	DK026			
LML	STAR-4T	150	2010	→	68B40722	DK026			
LML	STAR-DE-LUXE	150	2009	→	68B40722	DK026			
LML	STAR-4T	151	2010	→	68B40722	DK026			
LML	STAR-4T	200	2010	→	68B40722	DK026			
MALAGUTI									
MALAGUTI	F18-PROJECT	125	2000	→					
MALAGUTI	F18-WARRIOR	125	2000	→					
MALAGUTI	MADISON	125	1999	→	68B40735	DK211			
MALAGUTI	MADISON-BLACK-RIDER	125	2003	→	68B40735	DK211			
MALAGUTI	PHANTOM-MAX	125	2003	→	68B40735	DK211			
MALAGUTI	F18-PROJECT	150	2000	→					
MALAGUTI	F18-WARRIOR	150	2000	→					
MALAGUTI	MADISON	150	1999	→	68B40735	DK211			
MALAGUTI	MADISON	180	1999	→	68B40735	DK211			

ACCOSSATO

dischi freno brake rotor

INDICE ANALITICO / index

	DK: POSTERIORE / Rear				DISCO S. SPORT BREMBO	DKS OEM ANTERIORE Front	DKR ANTERIORE Front
	FISSO / Fix		FLOTTANTE / Floating				
	BREMBO	ACCOSSATO	BREMBO	ACCOSSATO			
	68B407B2	DK020					
	68B40724	DK210					
	68B407B2	DK020					
	68B407B2	DK020					
	68B40799	DK170					
	68B40724	DK210					
	68B40771	DK040					
	68B407N5	DK087					
	68B407D8	DK083					
	68B40771	DK040					
	68B40714	DK019					
	68B40794	DK063					
	68B40794	DK063					
	68B407B2	DK020					
	68B407B2	DK020					
	68B40795	DK023					
	68B40799	DK170					
	68B40799	DK170					
	68B40799	DK170					
	68B40771	DK040					
	68B40799	DK170					
	68B40799	DK170					
	68B40799	DK170					
	68B40799	DK170					
LAVERDA							
	68B40791	DK008					
	68B40791	DK008					
	68B40791	DK008					
	68B40791	DK008					
	68B40791	DK008					
	68B40791	DK008					
	68B40791	DK008					
	68B40791	DK008					
	68B40791	DK008					
	68B40791	DK008					
	68B40791	DK008					
	68B40791	DK008					
	68B407G6	DK184					
LEM							
LML							
MALAGUTI							
	68B40735	DK211					
	68B40735	DK211					
	68B40735	DK211					
	68B40735	DK211					
	68B40735	DK211					
	68B40735	DK211					
	68B40735	DK211					
	68B40735	DK211					
	68B40735	DK211					

dischi freno brake rotor

INDICE ANALITICO / index

MARCA / Brand	MODELLO / Model	CC	DA From	A To	DK: ANTERIORE / Front				
					FISSO / Fix		FLOTTANTE / Floating		
					BREMBO	ACCOSSATO	BREMBO	ACCOSSATO	
MALAGUTI	MADISON	200	2002	→	68B40735	DK211			
MALAGUTI	MADISON-BLACK-RIDER	200	2003	→	68B40735	DK211			
MALAGUTI	PHANTOM-MAX	200	2003	→	68B40735	DK211			
MALAGUTI	MADISON	250	1999	2003					
MALAGUTI	MADISON-3	250	2008	→	68B40735	DK211			
MALAGUTI	MADISON-RS	250	2004	→	68B40735	DK211			
MALAGUTI	PASSWORD	250	2005	→					
MALAGUTI	PHANTOM-MAX	250	2005	2006	68B40735	DK211			
MBK									
MBK	NEO'S	50	1994	→	68B40717	DK227			
MBK	OVETTO	50	1996	2010	68B40717	DK227			
MBK	OVETTO	100	2000	2002	68B40717	DK227			
MBK	DOODO	125	2000	→	68B407G3	DK201			
MBK	SKYLINER	125	1999	2001	68B407G3	DK201			
MBK	SKYLINER	125	2002	2010	68B407G3	DK201			
MBK	THUNDER	125	2001	→					
MBK	DOODO	150	2001	→	68B407G3	DK201			
MBK	SKYLINER	150	2000	2000	68B407G3	DK201			
MBK	SKYLINER	150	2001	→	68B407G3	DK201			
MBK	SKYLINER	180	2003	→	68B407G3	DK201			
MBK	SKYLINER	250	2000	2003	68B40791	DK008			
MBK	KILIBRE	300	2003	2004					
MONDIAL									
MONDIAL	XR7	50	1999	→	68B40717	DK227			
MONDIAL	PIEGA	999	2003	→			78B40870	DK022	
MONDIAL	PIEGA-EVO	999	2003	→			78B40870	DK022	
MONDIAL	PIEGA-NUDA	999	2004	→			78B40870	DK022	
MONDIAL	RZ-NUDA	999	2002	→					
MONDIAL	RZ-STARFIGHTER	999	2002	→					
MOTO GUZZI									
MOTO GUZZI	BREVA-750-I.E.	750	2003	2007			78B40870	DK022	
MOTO GUZZI	NEVADA	750	2003	2007			78B40870	DK022	
MOTO GUZZI	NEVADA-AQUILA-NERA	750	2010	→			78B40870	DK022	
MOTO GUZZI	NEVADA-CLASSIC-I.E.	750	2003	→			78B40870	DK022	
MOTO GUZZI	NEVADA-CLUB	750	2003	→			78B40870	DK022	
MOTO GUZZI	V7-CAFE'-CLASSIC	750	2010	→			78B40870	DK022	
MOTO GUZZI	V7-CLASSIC	750	2009	→			78B40870	DK022	
MOTO GUZZI	V7-II-CAFE'-RACER	750	2015	→			78B40870	DK022	
MOTO GUZZI	V7-II-RACER	750	2015	→			78B40870	DK022	
MOTO GUZZI	V7-II-SPECIAL	750	2015	→			78B40870	DK022	
MOTO GUZZI	V7-II-STONE	750	2015	→			78B40870	DK022	
MOTO GUZZI	V7-RACER	750	2010	→			78B40870	DK022	
MOTO GUZZI	V7-SPECIAL	750	2012	→			78B40870	DK022	
MOTO GUZZI	V7-STONE	750	2012	→			78B40870	DK022	
MOTO GUZZI	BREVA	850	2006	2008			78B40870	DK022	
MOTO GUZZI	GRISO	850	2006	→			78B40870	DK022	
MOTO GUZZI	NORGE-T-GTL	850	2007	→			78B40870	DK022	
MOTO GUZZI	NORGE-T-GTL-ABS	850	2007	→			78B40870	DK022	
MOTO GUZZI	BELLAGIO	940	2010	→			78B40870	DK022	
MOTO GUZZI	CALIFORNIA-AQUILA-NERA	1000	2010	→			78B40870	DK022	
MOTO GUZZI	CALIFORNIA-STONE	1000	2001	2006			78B40870	DK022	
MOTO GUZZI	DAYTONA-RACING	1000	1996	→			78B40870	DK022	
MOTO GUZZI	DAYTONA-RS	1000	1996	→			78B40870	DK022	
MOTO GUZZI	V10-CENTAURO	1000	1997	1999			78B40870	DK022	
MOTO GUZZI	V10-CENTAURO-GT	1000	1999	2001			78B40870	DK022	
MOTO GUZZI	V10-CENTAURO-SPORT	1000	1998	2000			78B40870	DK022	
MOTO GUZZI	BREVA	1100	2005	2007			78B40870	DK022	
MOTO GUZZI	BREVA-ABS	1100	2005	2007			78B40870	DK022	
MOTO GUZZI	CALIFORNIA-ALUMINIUM	1100	2003	→			78B40870	DK022	
MOTO GUZZI	CALIFORNIA-EV	1100	1996	2000			78B40870	DK022	
MOTO GUZZI	CALIFORNIA-EV-SPECIAL	1100	1997	2003			78B40870	DK022	

ACCOSSATO

dischi freno brake rotor

INDICE ANALITICO / index

	DK: POSTERIORE / Rear				DISCO S. SPORT BREMBO	DKS OEM ANTERIORE Front	DKR ANTERIORE Front
	FISSO / Fix		FLOTTANTE / Floating				
	BREMBO	ACCOSSATO	BREMBO	ACCOSSATO			
	68B40735	DK211					
	68B40735	DK211					
	68B40735	DK211					
	68B40735	DK211					
	68B40798	DK064					
	68B40735	DK211					
MBK							
	68B407G1	DK218					
	68B407G2	DK219					
	68B407G1	DK218					
	68B407G1	DK218					
	68B40778	DK213					
MONDIAL							
	68B407G2	DK219					
	68B407G2	DK219					
	68B407G2	DK219					
	68B407G2	DK219					
	68B407G2	DK219					
MOTO GUZZI							
	68B407G4	DK183					
	68B407G4	DK183					
	68B407G4	DK183					
	68B407G4	DK183					

dischi freno brake rotor

INDICE ANALITICO / index

MARCA / Brand	MODELLO / Model	CC	DA From	A To	DK: ANTERIORE / Front				
					FISSO / Fix		FLOTTANTE / Floating		
					BREMBO	ACCOSSATO	BREMBO	ACCOSSATO	
MOTO GUZZI	CALIFORNIA-EV-TOURING	1100	2003	→			78B40870	DK022	
MOTO GUZZI	CALIFORNIA-JACKAL	1100	2001	2006			78B40870	DK022	
MOTO GUZZI	CALIFORNIA-TITANIUM	1100	2003	→			78B40870	DK022	
MOTO GUZZI	GRISO	1100	2005	2008			78B40870	DK022	
MOTO GUZZI	METAL	1100	2002	→			78B40870	DK022	
MOTO GUZZI	SPORT	1100	1994	1996			78B40870	DK022	
MOTO GUZZI	SPORT	1100	1998	1999			78B40870	DK022	
MOTO GUZZI	SPORT	1100	2000	→			78B40870	DK022	
MOTO GUZZI	SPORT-CORSA	1100	1998	1999			78B40870	DK022	
MOTO GUZZI	SPORT-I.E.	1100	1996	1999			78B40870	DK022	
MOTO GUZZI	V11	1100	2000	→			78B40870	DK022	
MOTO GUZZI	V11-BALLABIO	1100	2003	→			78B40870	DK022	
MOTO GUZZI	V11-CAFE'-SPORT	1100	2003	→			78B40870	DK022	
MOTO GUZZI	V11-COPPA-ITALIA	1100	2003	→			78B40870	DK022	
MOTO GUZZI	V11-LE-MANS	1100	2001	2005			78B40870	DK022	
MOTO GUZZI	V11-LE-MANS-NERO-CORSA	1100	2003	→			78B40870	DK022	
MOTO GUZZI	V11-LE-MANS-ROSSO-CORSA	1100	2003	→			78B40870	DK022	
MOTO GUZZI	V11-NAKED	1100	2001	2002			78B40870	DK022	
MOTO GUZZI	V11-NAKED	1100	2003	→					
MOTO GUZZI	V11-SPORT	1100	2001	2002			78B40870	DK022	
MOTO GUZZI	BREVA	1200	2008	2009			78B40870	DK022	
MOTO GUZZI	BREVA-ABS	1200	2008	2009			78B40870	DK022	
MOTO GUZZI	GRISO-8V	1200	2007	→			78B40870	DK022	
MOTO GUZZI	NORGE-ABS	1200	2006	→			78B40870	DK022	
MOTO GUZZI	NORGE-GT-8V	1200	2008	→			78B40870	DK022	
MOTO GUZZI	NORGE-T-GTL	1200	2006	2009			78B40870	DK022	
MOTO GUZZI	SPORT	1200	2006	2007			78B40870	DK022	
MOTO GUZZI	SPORT-8V	1200	2009	→			78B40870	DK022	
MOTO GUZZI	SPORT-ABS	1200	2006	2007			78B40870	DK022	
MOTO GUZZI	STELVIO	1200	2008	→			78B40870	DK022	
MOTO GUZZI	CALIFORNIA-CUSTOM	1400	2013	→					
MOTO GUZZI	CALIFORNIA-TOURING	1400	2013	→					
MOTO GUZZI	ELDORADO	1400	2015	→					
MOTO MORINI									
MOTO MORINI	9-1/2	1200	2006	2009			78B40870	DK022	
MOTO MORINI	CORSARO	1200	2005	2009			78B40870	DK022	
MOTO MORINI	CORSARO-AVIO	1200	2008	2009			78B40870	DK022	
MOTO MORINI	CORSARO-VELOCE	1200	2007	2009			78B40870	DK022	
MOTO MORINI	GRANPASSO	1200	2008	→			78B408A2	DK146	
MOTO MORINI	SCRAMBLER	1200	2009	→			78B408A2	DK146	
MOTO MORINI	SPORT	1200	2008	2010			78B40870	DK022	
MOTOR UNION									
MOTOR UNION	MAXI	125	1999	→	68B40791	DK008			
MOTOR UNION	MAXI	150	1999	→	68B40791	DK008			
MOTOR UNION	MIDI	150	1999	→	68B40714	DK019			
MOTOR UNION	MAXI	400	1999	→	68B40791	DK008			
MV AGUSTA									
MV AGUSTA	BRUTALE	675	2013	→			78B40893	DK141	
MV AGUSTA	F3	675	2011	→			78B40893	DK141	
MV AGUSTA	F3-RC	675	2016	→			78B40893	DK141	
MV AGUSTA	F3-SERIE-ORO	675	2012	2013			78B40889	DK139	
MV AGUSTA	BRUTALE	750	-	-					
MV AGUSTA	BRUTALE-S	750	2001	2006			78B40868	DK130	
MV AGUSTA	F4	750	-	-					
MV AGUSTA	F4-BIPOSTO-S	750	1998	2006					
MV AGUSTA	F4-BIPOSTO-S	750	2000	2006			78B40868	DK130	
MV AGUSTA	F4-SENNA	750	1998	2006			78B40868	DK130	
MV AGUSTA	BRUTALE	800	2013	→			78B40893	DK141	
MV AGUSTA	BRUTALE-RR	800	2015	→			78B40893	DK141	
MV AGUSTA	DRAGSTER	800	2014	→			78B40893	DK141	
MV AGUSTA	DRAGSTER-RR	800	2014	→			78B40893	DK141	

ACCOSSATO

dischi freno brake rotor

INDICE ANALITICO / index

	DK: POSTERIORE / Rear				DISCO S. SPORT BREMBO	DKS OEM ANTERIORE Front	DKR ANTERIORE Front
	FISSO / Fix		FLOTTANTE / Floating				
	BREMBO	ACCOSSATO	BREMBO	ACCOSSATO			
	68B407G4	DK183					
	68B407G4	DK183					
	68B407G4	DK183					
	68B407G4	DK183					
	68B407G4	DK183					
	68B407G4	DK183					
	68B407G4	DK183					
	68B407G4	DK183					
	68B407G4	DK183					
	68B407G4	DK183					
	68B407G4	DK183					
	68B407G4	DK183					
	68B407G4	DK183					
	68B407G4	DK183					
	68B407G4	DK183					
	68B407K1	DK221					
	68B407K1	DK221					
	68B407K1	DK221					
MOTO MORINI							
MOTOR UNION							
	68B40714	DK019					
	68B40714	DK019					
	68B40714	DK019					
	68B40714	DK019					
MV AGUSTA							
	68B407J2	DK194			208973747	DKS020	
	68B407J2	DK194			208973747	DKS020	
	68B407J2	DK194					
	68B407J2	DK194					
							DKR013
	68B407J1	DK193			208973727	DKS013	
							DKR013
	68B407J1	DK193					
	68B407J1	DK193			208973727	DKS013	
					208973727	DKS013	
	68B407J2	DK194			208973747	DKS020	
	68B407J2	DK194			208973747	DKS020	
	68B407J2	DK194					
	68B407J2	DK194					

dischi freno brake rotor

INDICE ANALITICO / index

MARCA / Brand	MODELLO / Model	CC	DA From	A To	DK: ANTERIORE / Front				
					FISSO / Fix		FLOTTANTE / Floating		
					BREMBO	ACCOSSATO	BREMBO	ACCOSSATO	
MV AGUSTA	DRAGSTER-RR-LH44	800	2015	→			78B40893	DK141	
MV AGUSTA	F3	800	2012	2013			78B40893	DK141	
MV AGUSTA	F3-AGO	800	2014	→			78B40889	DK139	
MV AGUSTA	F3-RC	800	2016	→			78B40893	DK141	
MV AGUSTA	F3-SERIE-ORO	800	2012	2013			78B40889	DK139	
MV AGUSTA	RIVALE	800	2013	→			78B40893	DK141	
MV AGUSTA	STRADALE	800	2015	→			78B40893	DK141	
MV AGUSTA	TURISMO-VELOCE	800	2014	→			78B40893	DK141	
MV AGUSTA	TURISMO-VELOCE-LUSSO	800	2014	→			78B40893	DK141	
MV AGUSTA	BRUTALE	910	-	-					
MV AGUSTA	BRUTALE-R	910	2006	2008			78B40889	DK139	
MV AGUSTA	BRUTALE-S	910	2005	2008			78B40868	DK130	
MV AGUSTA	BRUTALE	920	2012	→			78B40889	DK139	
MV AGUSTA	BRUTALE-R	989	2008	2008			78B40868	DK130	
MV AGUSTA	F4	1000	2013	→			78B40889	DK139	
MV AGUSTA	F4-312-R	1000	2007	2008			78B40889	DK139	
MV AGUSTA	F4-FRECCE-TRICOLORI	1000	2010	2012			78B40889	DK139	
MV AGUSTA	F4-R	1000	2006	2007			78B40889	DK139	
MV AGUSTA	F4-R	1000	2010	2013			78B40889	DK139	
MV AGUSTA	F4-RC	1000	2016	→			78B40889	DK139	
MV AGUSTA	F4-RR	1000	2010	2013			78B40889	DK139	
MV AGUSTA	F4-S	1000	2010	2012			78B40889	DK139	
MV AGUSTA	F4-S-MAMBA	1000	2004	2007			78B40868	DK130	
MV AGUSTA	BRUTALE	1078	2008	2009			78B40889	DK139	
MV AGUSTA	F4-312-R	1078	2007	2008			78B40889	DK139	
MV AGUSTA	BRUTALE	1090	2013	→					
MV AGUSTA	BRUTALE-CORSA	1090	2014	→			78B40889	DK139	
MV AGUSTA	BRUTALE-R	1090	2012	→					
MV AGUSTA	BRUTALE-RR	1090	2012	→			78B40889	DK139	
MZ									
MZ	1000-S	1000	2001	→					
MZ	1000-S	1000	2003	→					
PEUGEOT									
PEUGEOT	BUXY-R	50	1993	1997	68B40717	DK227			
PEUGEOT	DJANGO	50	2015	→	68B407M2	DK202			
PEUGEOT	SPEEDFIGHT-(AJP-CAL.)	50	2000	→					
PEUGEOT	SPEEDFIGHT-(BREMBO-CAL.)	50	1996	→					
PEUGEOT	TWEET	50	2011	→	68B407J4	DK067			
PEUGEOT	TWEET-RS	50	2013	→	68B407J4	DK067			
PEUGEOT	VIVA-3	50	2012	→	68B407M2	DK202			
PEUGEOT	X-RACE	50	2002	2005					
PEUGEOT	SPEEDFIGHT-(AJP-CAL.)	100	1998	2002					
PEUGEOT	DJANGO	125	2015	→	68B407M2	DK202			
PEUGEOT	DJANGO-ALLURE	125	2014	→	68B407M2	DK202			
PEUGEOT	DJANGO-EVASION	125	2014	→	68B407M2	DK202			
PEUGEOT	DJANGO-HERITAGE	125	2014	→	68B407M2	DK202			
PEUGEOT	DJANGO-ID	125	2015	→	68B407M2	DK202			
PEUGEOT	DJANGO-SPORT	125	2015	→	68B407M2	DK202			
PEUGEOT	GEOPOLIS	125	2006	2009	68B407D9	DK097			
PEUGEOT	GEOPOLIS-RS	125	2010	→	68B407D9	DK097			
PEUGEOT	GEO-RS	125	2007	2008	68B407D9	DK097			
PEUGEOT	SATELIS	125	2004	2008	68B407D9	DK097			
PEUGEOT	SATELIS-ABS	125	2006	2008	68B407D9	DK097			
PEUGEOT	SATELIS-COMPRESSOR	125	2011	→	68B407D9	DK097			
PEUGEOT	SATELIS-RS	125	2011	→	68B407D9	DK097			
PEUGEOT	TWEET	125	2011	→	68B407J4	DK067			
PEUGEOT	TWEET-EVO	125	2015	→	68B407J4	DK067			
PEUGEOT	TWEET-RS	125	2013	→	68B407J4	DK067			
PEUGEOT	VIVA-3	125	2012	→	68B407M2	DK202			
PEUGEOT	DJANGO	150	2015	→	68B407M2	DK202			
PEUGEOT	DJANGO-ALLURE	150	2014	→	68B407M2	DK202			

	DK: POSTERIORE / Rear				DISCO S. SPORT BREMBO	DKS OEM ANTERIORE Front	DKR ANTERIORE Front
	FISSO / Fix		FLOTTANTE / Floating				
	BREMBO	ACCOSSATO	BREMBO	ACCOSSATO			
	68B407J2	DK194					
	68B407J2	DK194					
	68B407J2	DK194					
	68B407J2	DK194					
	68B407J2	DK194					
	68B407J2	DK194			208973747	DKS020	
	68B407J2	DK194					
	68B407J2	DK194			208973747	DKS020	
	68B407J2	DK194			208973747	DKS020	
							DKR013
	68B407J1	DK193			208973727	DKS013	
	68B407J1	DK193			208973728	DKS014	
	68B407J1	DK193			208973728	DKS014	DKR013
	68B407J1	DK193			208973728	DKS014	
	68B407J1	DK193					
	68B407J1	DK193			208973728	DKS014	
					208973727	DKS013	
	68B407J1	DK193			208973728	DKS014	
	68B407J1	DK193			208973728	DKS014	
	68B407J1	DK193			208973728	DKS014	
	68B407J1	DK193			208973728	DKS014	
MZ							
	68B40753	DK159					
	68B40753	DK159					
PEUGEOT							
	68B40714	DK019					
	68B40714	DK019					
	68B407J4	DK067					
	68B40714	DK019					
	68B40714	DK019					
	68B40751	DK158					
	68B40751	DK158					
	68B407A8	DK173					
	68B407J4	DK067					
	68B407J4	DK067					
	68B407J4	DK067					

dischi freno brake rotor

INDICE ANALITICO / index

MARCA / Brand	MODELLO / Model	CC	DA From	A To	DK: ANTERIORE / Front			
					FISSO / Fix		FLOTTANTE / Floating	
					BREMBO	ACCOSSATO	BREMBO	ACCOSSATO
PEUGEOT	DJANGO-EVASION	150	2015	→	68B407M2	DK202		
PEUGEOT	DJANGO-HERITAGE	150	2014	→	68B407M2	DK202		
PEUGEOT	DJANGO-ID	150	2015	→	68B407M2	DK202		
PEUGEOT	DJANGO-SPORT	150	2015	→	68B407M2	DK202		
PEUGEOT	TWEET	150	2011	→	68B407J4	DK067		
PEUGEOT	TWEET-EVO	150	2015	→	68B407J4	DK067		
PEUGEOT	TWEET-RS	150	2013	→	68B407J4	DK067		
PEUGEOT	GEOPOLIS	250	2006	2009	68B407D9	DK097		
PEUGEOT	GEO-RS	250	2006	2008	68B407D9	DK097		
PEUGEOT	SATELIS	250	2006	→	68B407D9	DK097		
PEUGEOT	SATELIS-RS	250	2011	→	68B407D9	DK097		
PEUGEOT	SV	250	2002	2007	68B40775	DK058		
PEUGEOT	GEOPOLIS	300	2011	→	68B407D9	DK097		
PEUGEOT	GEOPOLIS-GT	300	2013	→	68B407D9	DK097		
PEUGEOT	GEO-RS	300	2011	→	68B407D9	DK097		
PEUGEOT	SATELIS	300	2014	→	68B407D9	DK097		
PEUGEOT	GEOPOLIS	400	2007	2009	68B407D9	DK097		
PEUGEOT	GEOPOLIS-GT	400	2014	→	68B407D9	DK097		
PEUGEOT	GEOPOLIS-RS	400	2007	2008	68B407D9	DK097		
PEUGEOT	METROPOLIS-GT	400	2014	→	68B407L7	DK105		
PEUGEOT	METROPOLIS-i	400	2014	→	68B407L7	DK105		
PEUGEOT	METROPOLIS-i-SPORT	400	2014	→	68B407L7	DK105		
PEUGEOT	METROPOLIS-RS	400	2014	→	68B407L7	DK105		
PEUGEOT	SATELIS	400	2007	→	68B407D9	DK097		
PEUGEOT	SATELIS-RS	400	2007	→	68B407D9	DK097		
PEUGEOT	GEOPOLIS	500	2008	→	68B407D9	DK097		
PEUGEOT	GEOPOLIS-RS	500	2009	→	68B407D9	DK097		
PEUGEOT	SATELIS	500	2006	→	68B407D9	DK097		
PEUGEOT	SATELIS-RS	500	2007	→	68B407D9	DK097		
PEUGEOT	SATELIS-ABS	600	2004	→	68B407D9	DK097		
PIAGGIO								
PIAGGIO	CLASSIC-SPORT	50	1997	→	68B40730	DK010		
PIAGGIO	ENERGY-EXTREME-DD	50	1999	→	68B40730	DK010		
PIAGGIO	ENERGY-EXTREME-DT	50	1999	→	68B40730	DK010		
PIAGGIO	FLY-2T	50	2005	2007	68B40722	DK026		
PIAGGIO	FLY-2T	50	2010	2011	68B40722	DK026		
PIAGGIO	FLY-4T	50	2008	2011	68B40722	DK026		
PIAGGIO	FREE-FL	50	1995	2002	68B40722	DK026		
PIAGGIO	LIBERTY	50	1997	2011	68B40738	DK025		
PIAGGIO	LIBERTY-2T	50	2006	2008	68B40738	DK025		
PIAGGIO	LIBERTY-2T-RST	50	2004	→	68B40738	DK025		
PIAGGIO	LIBERTY-2T-SPORT	50	2006	2008	68B40738	DK025		
PIAGGIO	LIBERTY-4T	50	2000	2009	68B40738	DK025		
PIAGGIO	LIBERTY-4T-DELIVERY-TNT	50	2009	→	68B40738	DK025		
PIAGGIO	LIBERTY-4T-RST	50	2004	→	68B40738	DK025		
PIAGGIO	LIBERTY-4T-SPORT	50	2006	2008	68B40738	DK025		
PIAGGIO	LIBERTY-PTT-EURO2	50	2004	2005	68B40738	DK025		
PIAGGIO	NRG-EXTREME	50	1999	2000	68B40730	DK010		
PIAGGIO	NRG-MC3	50	2001	2004	68B40730	DK010		
PIAGGIO	NRG-POWER-DD	50	2005	2011	68B40738	DK025		
PIAGGIO	NRG-POWER-DD-SERIE-SPECIALE	50	2007	→	68B40738	DK025		
PIAGGIO	NRG-POWER-DT	50	2006	2011	68B40738	DK025		
PIAGGIO	NRG-POWER-PUREJET	50	2004	→	68B40738	DK025		
PIAGGIO	NRG-PUREJET	50	2002	2004	68B40730	DK010		
PIAGGIO	NRG-PUREJET	50	2005	2010	68B40738	DK025		
PIAGGIO	NRG-RST-MC2	50	1996	1998	68B40717	DK227		
PIAGGIO	NTT	50	1996	→	68B40717	DK227		
PIAGGIO	SFERA-RST	50	1996	1998	68B40722	DK026		
PIAGGIO	STEALTH	50	1998	→	68B40730	DK010		
PIAGGIO	STORM	50	1994	→	68B40717	DK227		
PIAGGIO	TYPHOON	50	1994	→	68B40717	DK227		

ACCOSSATO

dischi freno brake rotor

INDICE ANALITICO / index

	DK: POSTERIORE / Rear				DISCO S. SPORT BREMBO	DKS OEM ANTERIORE Front	DKR ANTERIORE Front
	FISSO / Fix		FLOTTANTE / Floating				
	BREMBO	ACCOSSATO	BREMBO	ACCOSSATO			
	68B407J4	DK067					
	68B407J4	DK067					
	68B407J4	DK067					
	68B407A8	DK173					
	68B40751	DK158					
	68B40751	DK158					
	68B40749	DK003					
	68B40751	DK158					
	68B407A8	DK173					
	68B40751	DK158					
	68B40751	DK158					
	68B407L8	DK222					
	68B407L8	DK222					
	68B407L8	DK222					
	68B407L8	DK222					
	68B407A8	DK173					
	68B407A8	DK173					
	68B407A8	DK173					
	68B407A8	DK173					
PIAGGIO							
	68B40713	DK009					
	68B40713	DK009					
	68B40713	DK009					
	68B40713	DK009					
	68B40713	DK009					
	68B40713	DK009					
	68B40713	DK009					
	68B40713	DK009					
	68B40713	DK009					

dischi freno brake rotor

INDICE ANALITICO / index

MARCA / Brand	MODELLO / Model	CC	DA From	A To	DK: ANTERIORE / Front				
					FISSO / Fix		FLOTTANTE / Floating		
					BREMBO	ACCOSSATO	BREMBO	ACCOSSATO	
PIAGGIO	VESPA-ET2	50	1997	2005	68B40722	DK026			
PIAGGIO	VESPA-ET4	50	1997	2005	68B40722	DK026			
PIAGGIO	VESPA-LX-2T	50	2005	2013	68B40722	DK026			
PIAGGIO	VESPA-LX-2T-FL	50	2009	2010	68B40722	DK026			
PIAGGIO	VESPA-LX-2T-TOURING	50	2010	2013	68B40722	DK026			
PIAGGIO	VESPA-LX-4T	50	2005	2008	68B40722	DK026			
PIAGGIO	VESPA-LX-4T-4V	50	2009	2013	68B40722	DK026			
PIAGGIO	VESPA-LX-4T-4V-TOURING	50	2010	2013	68B40722	DK026			
PIAGGIO	VESPA-LXV-2T	50	2006	2009	68B40722	DK026			
PIAGGIO	VESPA-LXV-2T-NAVY	50	2008	2008	68B40722	DK026			
PIAGGIO	VESPA-PRIMAVERA	50	2013	→	68B40722	DK026			
PIAGGIO	VESPA-PRIMAVERA-4T-4V	50	2013	→	68B40722	DK027			
PIAGGIO	VESPA-S-2T	50	2007	2012	68B40722	DK026			
PIAGGIO	VESPA-S-4T&COLLEGE	50	2008	2012	68B40722	DK026			
PIAGGIO	VESPA-S-4T-4V	50	2008	2009	68B40722	DK026			
PIAGGIO	VESPA-S-COLLEGE-4T	50	2007	2010	68B40722	DK026			
PIAGGIO	VESPA-SPRINT-2T-2V	50	2014	→	68B40722	DK026			
PIAGGIO	VESPA-SPRINT-4T-4V	50	2014	→	68B40722	DK026			
PIAGGIO	ZIP	50	2000	2004	68B40713	DK009			
PIAGGIO	ZIP-2T	50	2008	2010	68B40713	DK009			
PIAGGIO	ZIP-4T	50	2000	2010	68B40713	DK009			
PIAGGIO	ZIP-II	50	2001	→	68B40713	DK009			
PIAGGIO	ZIP-SP	50	1996	2008	68B40722	DK026			
PIAGGIO	ZIP-SP-EURO2	50	2006	2013	68B40722	DK026			
PIAGGIO	ZIP-SPORT-H2O-SP	50	1996	→	68B40722	DK026			
PIAGGIO	SFERA	75	1996	1997	68B40722	DK026			
PIAGGIO	TYPHOON	80	1996	→	68B40717	DK227			
PIAGGIO	FLY-4T	100	2006	2008	68B40722	DK026			
PIAGGIO	FREE	100	2002	2003	68B40738	DK025			
PIAGGIO	ZIP-4T	100	2006	2010	68B40713	DK009			
PIAGGIO	BEVERLY	125	2001	2006	68B407B7	DK027			
PIAGGIO	BEVERLY-EURO3	125	2007	2008	68B407B7	DK027			
PIAGGIO	BEVERLY-EURO3-MIC	125	2007	→	68B407B7	DK027			
PIAGGIO	BEVERLY-EURO3-SPORT	125	2007	2008	68B407B7	DK027			
PIAGGIO	BEVERLY-I.E.-GT	125	2010	→					
PIAGGIO	BEVERLY-RST	125	2004	2007	68B407B7	DK027			
PIAGGIO	BEVERLY-TOURER-EURO3	125	2008	2010	68B407B7	DK027			
PIAGGIO	CARNABY	125	2007	2010	68B407B7	DK027			
PIAGGIO	FLY	125	2005	2007	68B40722	DK026			
PIAGGIO	FLY-4T-3V-EURO-3	125	2013	→					
PIAGGIO	FLY-EURO3	125	2008	2011	68B40722	DK026			
PIAGGIO	GTS-SUPER-IE	125	2015	→	68B40738	DK025			
PIAGGIO	HEXAGON	125	1994	1997	68B40713	DK009			
PIAGGIO	HEXAGON-GTX	125	2000	→	68B40722	DK026			
PIAGGIO	HEXAGON-LX	125	1998	1999	68B40722	DK026			
PIAGGIO	LIBERTY	125	1998	2002	68B40738	DK025			
PIAGGIO	LIBERTY	125	2012	→	68B40776	DK091			
PIAGGIO	LIBERTY-4T	125	2006	2007	68B40738	DK025			
PIAGGIO	LIBERTY-4T-DELIVERY-EURO3	125	2008	→	68B40738	DK025			
PIAGGIO	LIBERTY-4T-EURO3	125	2007	2008	68B40738	DK025			
PIAGGIO	LIBERTY-4T-SPORT-EURO3	125	2006	2008	68B40738	DK025			
PIAGGIO	LIBERTY-RST	125	2004	2005	68B40738	DK025			
PIAGGIO	LIBERTY-RST-PTT	125	2005	2006	68B40738	DK025			
PIAGGIO	LIBERTY-S	125	2006	→	68B40738	DK025			
PIAGGIO	MP3	125	2007	2008	68B40774	DK090			
PIAGGIO	MP3-HYBRID	125	2009	2010	68B40774	DK090			
PIAGGIO	MP3-IE	125	2008	2009	68B40774	DK090			
PIAGGIO	SFERA	125	1996	1998	68B40722	DK026			
PIAGGIO	SKIPPER-4T	125	2000	2002	68B40730	DK010			
PIAGGIO	SKIPPER-LX	125	1998	1999	68B40730	DK010			
PIAGGIO	SKR	125	2001	2002	68B40730	DK010			

ACCOSSATO

dischi freno brake rotor

INDICE ANALITICO / index

	DK: POSTERIORE / Rear				DISCO S. SPORT BREMBO	DKS OEM ANTERIORE Front	DKR ANTERIORE Front
	FISSO / Fix		FLOTTANTE / Floating				
	BREMBO	ACCOSSATO	BREMBO	ACCOSSATO			
	68B407B7	DK027					
	68B407B7	DK027					
	68B407B7	DK027					
	68B407B7	DK027					
	68B40760	DK161					
	68B407B7	DK027					
	68B407B7	DK027					
	68B407B7	DK027					
	68B40738	DK025					
	68B40738	DK025					
	68B40722	DK026					
	68B40777	DK163					
	68B40777	DK163					
	68B40777	DK163					

dischi freno brake rotor

INDICE ANALITICO / index

MARCA / Brand	MODELLO / Model	CC	DA From	A To	DK: ANTERIORE / Front			
					FISSO / Fix		FLOTTANTE / Floating	
					BREMBO	ACCOSSATO	BREMBO	ACCOSSATO
PIAGGIO	STEALTH	125	1996	→	68B40730	DK010		
PIAGGIO	SUPER-HEXAGON-GTX-12"	125	2001	2003	68B40777	DK163		
PIAGGIO	TYPHOON	125	1996	2000	68B40717	DK227		
PIAGGIO	TYPHOON-CATALIZ.	125	2002	→	68B40717	DK227		
PIAGGIO	VESPA-946	125	2014	→	68B407L5	DK069		
PIAGGIO	VESPA-ET4	125	1996	2002	68B40722	DK026		
PIAGGIO	VESPA-GRANTURISMO	125	2003	2007	68B40738	DK025		
PIAGGIO	VESPA-GRANTURISMO-EURO3	125	2006	2007	68B40738	DK025		
PIAGGIO	VESPA-GRANTURISMO-L	125	2001	2003	68B40730	DK010		
PIAGGIO	VESPA-GT-L	125	2004	→	68B40738	DK025		
PIAGGIO	VESPA-GTS-4T-IE-SUPER	125	2009	→	68B40738	DK025		
PIAGGIO	VESPA-GTS-EURO3	125	2007	2011	68B40738	DK025		
PIAGGIO	VESPA-GTV	125	2007	2008	68B40738	DK025		
PIAGGIO	VESPA-GTV-4T-NAVY-EURO3	125	2008	→	68B40738	DK025		
PIAGGIO	VESPA-LX	125	2004	2011	68B40722	DK026		
PIAGGIO	VESPA-LX-4T-FL	125	2009	2009	68B40722	DK026		
PIAGGIO	VESPA-LX-EURO-3	125	2006	2008	68B40722	DK026		
PIAGGIO	VESPA-LX-EURO3-IE	125	2009	2011	68B40722	DK026		
PIAGGIO	VESPA-LX-TOURING	125	2010	2013	68B40722	DK026		
PIAGGIO	VESPA-LXV-4T-NAVY-EURO3	125	2007	2008	68B40722	DK026		
PIAGGIO	VESPA-LXV-IE-4T	125	2010	2013	68B40722	DK026		
PIAGGIO	VESPA-PRIMAVERA-4T	125	2013	→	68B40722	DK026		
PIAGGIO	VESPA-PX	125	1998	2011	68B40722	DK026		
PIAGGIO	VESPA-PX-30-ANNI	125	2007	2008	68B40722	DK026		
PIAGGIO	VESPA-S-4T-EURO3	125	2007	2008	68B40722	DK026		
PIAGGIO	VESPA-S-4T-IE	125	2012	→	68B40722	DK026		
PIAGGIO	VESPA-S-4T-IE&COLLEGE	125	2009	2011	68B40722	DK026		
PIAGGIO	VESPA-SPRINT-4T-IE	125	2014	→	68B40722	DK026		
PIAGGIO	X10-EXECUTIVE	125	2013	→	68B407J5	DK103		
PIAGGIO	X10-I.E.	125	2012	→	68B407J5	DK103		
PIAGGIO	X7	125	2007	2009	68B407B6	DK092		
PIAGGIO	X7-EURO3	125	2008	2009	68B407B6	DK092		
PIAGGIO	X7-EVO-IE-EURO3	125	2009	2010	68B407B6	DK092		
PIAGGIO	X8	125	2004	2006	68B407B6	DK092		
PIAGGIO	X8-PREMIUM-EURO2	125	2006	2007	68B407B6	DK092		
PIAGGIO	X8-PREMIUM-EURO3	125	2006	2007	68B407B6	DK092		
PIAGGIO	X9	125	2001	→	68B40776	DK091		
PIAGGIO	X9-EVOLUTION	125	2003	2007	68B40776	DK091		
PIAGGIO	X9-EVOLUTION-EURO3	125	2007	→	68B40776	DK091		
PIAGGIO	X-EVO	125	2007	→	68B407B6	DK092		
PIAGGIO	ZIP	125	2000	2002	68B40713	DK009		
PIAGGIO	ZIP-4T	125	2002	→	68B40738	DK025		
PIAGGIO	FLY	150	2005	2007	68B40722	DK026		
PIAGGIO	FLY-EURO3	150	2008	2011	68B40722	DK026		
PIAGGIO	HEXAGON	150	1994	1997	68B40713	DK009		
PIAGGIO	HEXAGON	150	1998	→	68B40722	DK026		
PIAGGIO	LIBERTY	150	2000	→	68B40738	DK025		
PIAGGIO	LIBERTY	150	2012	→	68B40776	DK091		
PIAGGIO	LIBERTY-4T-EURO3	150	2008	→	68B40738	DK025		
PIAGGIO	LIBERTY-4T-SPORT	150	2008	→	68B40738	DK025		
PIAGGIO	SKIPPER-LXT-ST	150	1999	→	68B40730	DK010		
PIAGGIO	SKR	150	2001	2002	68B40730	DK010		
PIAGGIO	STEALTH	150	1996	→	68B40730	DK010		
PIAGGIO	SUPERHEXAGON	150	1999	→	68B40738	DK025		
PIAGGIO	VESPA-ET4	150	1999	2005	68B40722	DK026		
PIAGGIO	VESPA-GRANTURISMO-L	150	2001	→	68B40730	DK010		
PIAGGIO	VESPA-LX	150	2005	2006	68B40722	DK026		
PIAGGIO	VESPA-LX-4T-FL	150	2009	→	68B40722	DK026		
PIAGGIO	VESPA-LX-EURO3	150	2006	2008	68B40722	DK026		
PIAGGIO	VESPA-LX-EURO3-IE	150	2009	2011	68B40722	DK026		
PIAGGIO	VESPA-LX-TOURING	150	2010	2013	68B40722	DK026		

ACCOSSATO

dischi freno brake rotor

INDICE ANALITICO / index

	DK: POSTERIORE / Rear				DISCO S. SPORT BREMBO	DKS OEM ANTERIORE Front	DKR ANTERIORE Front
	FISSO / Fix		FLOTTANTE / Floating				
	BREMBO	ACCOSSATO	BREMBO	ACCOSSATO			
	68B40738	DK025					
	68B407L6	DK085					
	68B40738	DK025					
	68B40738	DK025					
	68B40730	DK010					
	68B40738	DK025					
	68B40738	DK025					
	68B40738	DK025					
	68B40738	DK025					
	68B40738	DK025					
	68B407J6	DK220					
	68B40777	DK163					
	68B40776	DK091					
	68B40777	DK163					
	68B40777	DK163					
	68B40776	DK091					
	68B40776	DK091					
	68B40776	DK091					
	68B40776	DK091					
	68B40776	DK091					
	68B40776	DK091					
	68B40777	DK163					
	68B40776	DK091					
	68B40738	DK025					
	68B40730	DK010					

dischi freno brake rotor

INDICE ANALITICO / index

MARCA / Brand	MODELLO / Model	CC	DA From	A To	DK: ANTERIORE / Front				
					FISSO / Fix		FLOTTANTE / Floating		
					BREMBO	ACCOSSATO	BREMBO	ACCOSSATO	
PIAGGIO	VESPA-PRIMAVERA	150	2014	→	68B40722	DK026			
PIAGGIO	VESPA-PX	150	2002	2012	68B40722	DK026			
PIAGGIO	VESPA-S-4T	150	2008	2009	68B40722	DK026			
PIAGGIO	VESPA-S-4T-IE&COLLEGE	150	2009	2012	68B40722	DK026			
PIAGGIO	X8	150	2006	2008	68B407B6	DK092			
PIAGGIO	HEXAGON	180	1994	1998	68B40713	DK009			
PIAGGIO	HEXAGON-LXT	180	1999	2000	68B40722	DK026			
PIAGGIO	SUPERHEXAGON	180	1999	2000	68B40722	DK026			
PIAGGIO	SUPER-HEXAGON-GTX-12"	180	2001	2003	68B40777	DK163			
PIAGGIO	X9	180	2000	2002	68B40776	DK091			
PIAGGIO	X9-AMALFI	180	2000	2003	68B40776	DK091			
PIAGGIO	BEVERLY	200	2003	2006	68B407B6	DK092			
PIAGGIO	CARNABY	200	2007	2009	68B407B6	DK092			
PIAGGIO	LIBERTY	200	2006	→	68B40738	DK025			
PIAGGIO	LIBERTY-4T-EURO3	200	2007	2008	68B40738	DK025			
PIAGGIO	LIBERTY-4T-SPORT-EURO3	200	2006	2007	68B40738	DK025			
PIAGGIO	LIBERTY-RST	200	2004	→	68B40738	DK025			
PIAGGIO	LIBERTY-S	200	2001	→	68B40738	DK025			
PIAGGIO	LIBERTY-SPORT	200	2006	→	68B40738	DK025			
PIAGGIO	VESPA-GRANTURISMO	200	2006	2007	68B40738	DK025			
PIAGGIO	VESPA-GT-L	200	2004	2006	68B40738	DK025			
PIAGGIO	VESPA-PX	200	1996	2007	68B40722	DK026			
PIAGGIO	VESPA-PX-E	200	1996	2007	68B40722	DK026			
PIAGGIO	VESPA-PX-TIME	200	2001	2007	68B40722	DK026			
PIAGGIO	X8	200	2005	2007	68B407B6	DK092			
PIAGGIO	X8-EVO	200	2005	2007	68B407B6	DK092			
PIAGGIO	X9	200	2002	2003	68B40776	DK091			
PIAGGIO	X9-AMALFI	200	2001	2002	68B40776	DK091			
PIAGGIO	X9-EVOLUTION	200	2003	2004	68B40776	DK091			
PIAGGIO	BEVERLY	250	2006	2007	68B407B7	DK027			
PIAGGIO	BEVERLY-CRUISER	250	2007	2009	68B407B7	DK027			
PIAGGIO	BEVERLY-EURO3-MIC	250	2007	→	68B407B7	DK027			
PIAGGIO	BEVERLY-IE-EURO3	250	2006	2008	68B407B7	DK027			
PIAGGIO	BEVERLY-RST	250	2004	2005	68B407B7	DK027			
PIAGGIO	BEVERLY-SPORT	250	2006	2008	68B407B7	DK027			
PIAGGIO	BEVERLY-TOURER-EURO3	250	2008	2009	68B407B7	DK027			
PIAGGIO	CARNABY	250	2008	2009	68B407B7	DK027			
PIAGGIO	HEXAGON	250	1998	2001	68B40722	DK026			
PIAGGIO	MP3	250	2006	2008	68B40774	DK090			
PIAGGIO	MP3-LT	250	2009	→	68B40774	DK090			
PIAGGIO	MP3-MIC	250	2008	2009	68B40774	DK090			
PIAGGIO	SUPERHEXAGON	250	1999	2001	68B40738	DK025			
PIAGGIO	VESPA-GT-60-EURO	250	2006	2007	68B40738	DK025			
PIAGGIO	VESPA-GTS	250	2005	2012	68B40738	DK025			
PIAGGIO	VESPA-GTS-ABS	250	2005	2012	68B40738	DK025			
PIAGGIO	VESPA-GTV	250	2006	2009	68B40738	DK025			
PIAGGIO	VESPA-GTV-4T-NAVY-EURO3	250	2008	→	68B40738	DK025			
PIAGGIO	X7	250	2008	2009	68B407B6	DK092			
PIAGGIO	X8-I.E.	250	2005	2008	68B407B6	DK092			
PIAGGIO	X9	250	2000	2006	68B40776	DK091			
PIAGGIO	X9-EVOLUTION	250	2004	2006	68B40776	DK091			
PIAGGIO	X-EVO	250	2007	2011	68B407B6	DK092			
PIAGGIO	BEVERLY-I.E.	300	2010	→	68B407D4	DK096			
PIAGGIO	BEVERLY-S	300	2011	→	68B407D4	DK096			
PIAGGIO	BEVERLY-TOURER-EURO3	300	2009	→	68B407B7	DK027			
PIAGGIO	CARNABY-CRUISER	300	2009	2012	68B407B6	DK092			
PIAGGIO	MP3-LT-BUSINESS-I.E.	300	2013	→	68B40774	DK090			
PIAGGIO	MP3-LT-HYBRID-I.E.	300	2010	→	68B40774	DK090			
PIAGGIO	MP3-LT-I.E.	300	2010	2011	68B40774	DK090			
PIAGGIO	MP3-LT-SPORT-I.E.	300	2009	2010	68B40774	DK090			
PIAGGIO	MP3-MIC-I.E.	300	2010	→	68B40774	DK090			

ACCOSSATO

dischi freno brake rotor

INDICE ANALITICO / index

	DK: POSTERIORE / Rear				DISCO S. SPORT BREMBO	DKS OEM ANTERIORE Front	DKR ANTERIORE Front
	FISSO / Fix		FLOTTANTE / Floating				
	BREMBO	ACCOSSATO	BREMBO	ACCOSSATO			
	68B40722	DK026					
	68B40738	DK025					
	68B40776	DK091					
	68B40776	DK091					
	68B407B6	DK092					
	68B407B6	DK092					
	68B40738	DK025					
	68B40738	DK025					
	68B40776	DK091					
	68B40776	DK091					
	68B40776	DK091					
	68B40776	DK091					
	68B40776	DK091					
	68B407B7	DK027					
	68B407B7	DK027					
	68B407B7	DK027					
	68B407B7	DK027					
	68B407B7	DK027					
	68B407B7	DK027					
	68B407B7	DK027					
	68B407B7	DK027					
	68B40738	DK025					
	68B40777	DK163					
	68B40777	DK163					
	68B40777	DK163					
	68B40722	DK026					
	68B40738	DK025					
	68B40738	DK025					
	68B40738	DK025					
	68B40738	DK025					
	68B40738	DK025					
	68B40777	DK163					
	68B40776	DK091					
	68B40776	DK091					
	68B40776	DK091					
	68B40777	DK163					
	68B40760	DK161					
	68B40760	DK161					
	68B407B7	DK027					
	68B407B6	DK092					
	68B40777	DK163					
	68B40777	DK163					
	68B40777	DK163					
	68B40777	DK163					
	68B40777	DK163					

dischi freno brake rotor

INDICE ANALITICO / index

MARCA / Brand	MODELLO / Model	CC	DA From	A To	DK: ANTERIORE / Front				
					FISSO / Fix		FLOTTANTE / Floating		
					BREMBO	ACCOSSATO	BREMBO	ACCOSSATO	
PIAGGIO	MP3-TOURING	300	2011	→	68B40774	DK090			
PIAGGIO	MP3-YOURBAN	300	2011	2014	68B40774	DK090			
PIAGGIO	MP3-YOURBAN-ie	300	2015	→	68B40774	DK090			
PIAGGIO	MP3-YOURBAN-LT	300	2013	→	68B40774	DK090			
PIAGGIO	MP3-YOURBAN-SPORT-I.E.	300	2013	→	68B40774	DK090			
PIAGGIO	MP3-YOURBAN-SPORT-LT-I.E.	300	2013	→	68B40774	DK090			
PIAGGIO	VESPA-GTS-IE	300	2012	→	68B40738	DK025			
PIAGGIO	VESPA-GTS-SUPER	300	2008	2013	68B40738	DK025			
PIAGGIO	VESPA-GTS-SUPER-SPORT	300	2010	→	68B40738	DK025			
PIAGGIO	VESPA-GTS-TOURING	300	2011	2012	68B40738	DK025			
PIAGGIO	VESPA-GTS-TOURING	300	2015	→	68B40738	DK025			
PIAGGIO	VESPA-GTS-TOURING-IE-ABS	300	2015	→	68B40738	DK025			
PIAGGIO	VESPA-GTV-VIA-MONTENAPOLEONE	300	2010	→	68B40738	DK025			
PIAGGIO	X7-EVO-I.E.	300	2009	2011	68B407B6	DK092			
PIAGGIO	BEVERLY-I.E.-GT	350	2011	→	68B407D4	DK096			
PIAGGIO	BEVERLY-S	350	2014	→	68B407D4	DK096			
PIAGGIO	X10-EXECUTIVE-ABS	350	2012	→	68B407J5	DK103			
PIAGGIO	X10-I.E.	350	2012	→	68B407J5	DK103			
PIAGGIO	BEVERLY-I.E.	400	2006	2007	68B407B6	DK092			
PIAGGIO	BEVERLY-TOURER-EURO3	400	2008	2010	68B407B6	DK092			
PIAGGIO	MP3	400	2007	2008	68B40774	DK090			
PIAGGIO	MP3-LT	400	2009	2010	68B40774	DK090			
PIAGGIO	MP3-LT-I.E.	400	2009	2010	68B40774	DK090			
PIAGGIO	MP3-LT-SPORT	400	2009	2010	68B40774	DK090			
PIAGGIO	MP3-LT-SPORT-I.E.	400	2009	2010	68B40774	DK090			
PIAGGIO	MP3-MIC	400	2008	2009	68B40774	DK090			
PIAGGIO	X8-I.E.	400	2006	2008	68B40776	DK091			
PIAGGIO	X-EVO	400	2007	2011	68B40776	DK091			
PIAGGIO	BEVERLY	500	2002	2006	68B407B7	DK027			
PIAGGIO	BEVERLY-CRUISER	500	2007	2012	68B407B6	DK092			
PIAGGIO	BEVERLY-EURO3	500	2006	2009	68B407B7	DK027			
PIAGGIO	MP3-SPORT	500	2011	→	68B40774	DK090			
PIAGGIO	MP3-TOURING-IE	500	2012	→	68B40774	DK090			
PIAGGIO	MP3-T-BUSINESS-I.E.	500	2013	→	68B40774	DK090			
PIAGGIO	NEXUS-IE-SP	500	2006	2008					
PIAGGIO	X10	500	2012	→	68B407J5	DK103			
PIAGGIO	X10-EXECUTIVE	500	2012	→	68B407J5	DK103			
PIAGGIO	X9	500	2001	2002	68B407B7	DK027			
PIAGGIO	X9-EVOLUTION	500	2003	2007	68B407B6	DK092			
PIAGGIO	X9-EVOLUTION-ABS	500	2006	2007	68B407B6	DK092			
SUZUKI									
SUZUKI	BURGMAN	125	2001	2006	68B40737	DK060			
SUZUKI	BURGMAN-NEW	125	2006	→	68B40770	DK062			
SUZUKI	RM	125	1989	1998			78B40813	DK111	
SUZUKI	RM	125	2000	2009			78B40813	DK111	
SUZUKI	BURGMAN	150	2001	2006	68B40737	DK060			
SUZUKI	BURGMAN	200	2007	→	68B40770	DK062			
SUZUKI	BURGMAN	250	2003	2006	68B407B4	DK065			
SUZUKI	BURGMAN	250	2007	2008	68B407B4	DK065			
SUZUKI	RM	250	1989	1989			78B40813	DK111	
SUZUKI	RM	250	1999	2008			78B40813	DK111	
SUZUKI	RMX	250	1992	1998			78B40813	DK111	
SUZUKI	RM-Z	250	2004	2006					
SUZUKI	RM-Z	250	2007	→			78B40812	DK110	
SUZUKI	BURGMAN	400	2003	2005	68B407B4	DK065			
SUZUKI	BURGMAN	400	2006	→	68B407B4	DK065			
SUZUKI	BURGMAN-ABS	400	2011	→	68B407B4	DK065			
SUZUKI	DRZ-E	400	2000	2008			78B40813	DK111	
SUZUKI	DRZ-S	400	2000	2009			78B40813	DK111	
SUZUKI	DRZ-SM	400	2005	2009					
SUZUKI	GSR	400	2006	2008			78B40866	DK048	

	DK: POSTERIORE / Rear				DISCO S. SPORT BREMBO	DKS OEM ANTERIORE Front	DKR ANTERIORE Front
	FISSO / Fix		FLOTTANTE / Floating				
	BREMBO	ACCOSSATO	BREMBO	ACCOSSATO			
	68B40777	DK163					
	68B40777	DK163					
	68B40777	DK163					
	68B40777	DK163					
	68B40777	DK163					
	68B40777	DK163					
	68B40738	DK025					
	68B40738	DK025					
	68B40738	DK025					
	68B40738	DK025					
	68B40738	DK025					
	68B40738	DK025					
	68B40738	DK025					
	68B40777	DK163					
	68B40760	DK161					
	68B40760	DK161					
	68B407J6	DK220					
	68B40777	DK163					
	68B40776	DK091					
	68B40776	DK091					
	68B40777	DK163					
	68B40777	DK163					
	68B40777	DK163					
	68B40777	DK163					
	68B40777	DK163					
	68B40777	DK163					
	68B40776	DK091					
	68B40777	DK163					
	68B40777	DK163					
	68B40777	DK163					
	68B40777	DK163					
	68B40777	DK163					
	68B40777	DK163					
	68B40777	DK163					
	68B40777	DK163					
	68B40777	DK163					
	68B40777	DK163					
	68B407J6	DK220					
	68B40777	DK163					
	68B40777	DK163					
	68B40777	DK163					
				SUZUKI			
	68B40741	DK081					
	68B40770	DK062					
	68B40784	DK215					
	68B40741	DK081					
	68B40770	DK062					
	68B40725	DK079					
	68B40726	DK080					
	68B40784	DK215					
	68B40782	DK214					
	68B40788	DK216					
	68B40725	DK079					
	68B40726	DK080					
	68B40726	DK080					
	68B40784	DK215					
	68B40785	DK049					

dischi freno brake rotor

INDICE ANALITICO / index

MARCA / Brand	MODELLO / Model	CC	DA From	A To	DK: ANTERIORE / Front			
					FISSO / Fix		FLOTTANTE / Floating	
					BREMBO	ACCOSSATO	BREMBO	ACCOSSATO
SUZUKI	RMX	450	2010	2011			78B40812	DK110
SUZUKI	RM-Z	450	2005	→			78B40812	DK110
SUZUKI	GS-E	500	1989	2008			78B408A0	DK144
SUZUKI	GSF-BANDIT	600	1995	2004			78B40820	DK073
SUZUKI	GSF-BANDIT-S	600	1995	2004				
SUZUKI	GSR	600	2006	2010			78B40866	DK048
SUZUKI	GSX-F	600	1989	1997			78B40820	DK073
SUZUKI	GSX-F	600	1998	2003			78B40820	DK073
SUZUKI	GSX-F	600	2004	2006			78B40821	DK044
SUZUKI	GSX-R	600	1997	2003			78B40875	DK041
SUZUKI	GSX-R	600	2004	2005			78B40842	DK121
SUZUKI	GSX-R	600	2006	2007			78B40864	DK205
SUZUKI	GSX-R	600	2008	→			78B40863	DK204
SUZUKI	RF-R	600	1993	1997			78B40820	DK073
SUZUKI	BURGMAN-ABS	650	2004	2012	68B407B4	DK065		
SUZUKI	DL-V-STROM	650	2004	2006			78B40865	DK129
SUZUKI	DL-V-STROM	650	2007	2012			78B40866	DK048
SUZUKI	DL-V-STROM XT (left/rear)	650	2015	→			78B40866	DK048
SUZUKI	DL-V-STROM-ABS	650	2007	→			78B40866	DK048
SUZUKI	GLADIUS	650	2009	2014			78B40829	DK117
SUZUKI	GLADIUS-ABS	650	2009	2014			78B40829	DK117
SUZUKI	GSF-BANDIT	650	2005	2006			78B40821	DK044
SUZUKI	GSF-BANDIT	650	2007	2012			78B40866	DK048
SUZUKI	GSF-BANDIT-ABS	650	2011	2014			78B40866	DK048
SUZUKI	GSF-BANDIT-S	650	2005	2006			78B40821	DK044
SUZUKI	GSF-BANDIT-S	650	2007	2012			78B40866	DK048
SUZUKI	GSX-F	650	2008	2012			78B40866	DK048
SUZUKI	GSX-F-ABS	650	2008	2014			78B40866	DK048
SUZUKI	SV	650	1999	2002			78B40820	DK073
SUZUKI	SV	650	2003	2010			78B40821	DK044
SUZUKI	SV	650	2007	→			78B40829	DK117
SUZUKI	SV-S	650	1999	2002			78B40820	DK073
SUZUKI	SV-S	650	2003	2010			78B40821	DK044
SUZUKI	SV-S-ABS	650	2007	2009			78B40829	DK117
SUZUKI	GSR	750	2011	2014			78B40866	DK048
SUZUKI	GSR-ABS	750	2011	2014			78B40866	DK048
SUZUKI	GSX	750	1997	2003				
SUZUKI	GSX-F	750	1998	2003			78B40820	DK073
SUZUKI	GSX-F	750	2004	2006			78B40821	DK044
SUZUKI	GSX-F-FL-SLINGSHOT	750	1989	1992			78B40820	DK073
SUZUKI	GSX-R	750	1985	1987				
SUZUKI	GSX-R	750	1988	1989				
SUZUKI	GSX-R	750	1990	1995				
SUZUKI	GSX-R	750	1996	2003			78B40875	DK041
SUZUKI	GSX-R	750	2004	2005			78B40842	DK121
SUZUKI	GSX-R	750	2006	2007			78B40864	DK205
SUZUKI	GSX-R	750	2008	→			78B40863	DK204
SUZUKI	RF-F	900	1994	1997				
SUZUKI	RF-R	900	1994	1998			78B408A0	DK144
SUZUKI	DL-V-STROM	1000	2002	2010			78B40865	DK129
SUZUKI	DL-V-STROM-ABS	1000	2014	→			78B40866	DK048
SUZUKI	GSX-R	1000	2001	2002			78B40875	DK041
SUZUKI	GSX-R	1000	2003	2004			78B40842	DK121
SUZUKI	GSX-R	1000	2005	2008			78B40864	DK205
SUZUKI	GSX-R	1000	2009	2014			78B40863	DK204
SUZUKI	SV	1000	2003	2007			78B40865	DK129
SUZUKI	SV-S	1000	2003	2007			78B40865	DK129
SUZUKI	TL-R	1000	1998	2003			78B40875	DK041
SUZUKI	TL-S	1000	1997	2001			78B40875	DK041
SUZUKI	V-STROM-ABS	1000	2014	→				
SUZUKI	GSX-R	1100	1986	1988				

	DK: POSTERIORE / Rear				DISCO S. SPORT BREMBO	DKS OEM ANTERIORE Front	DKR ANTERIORE Front
	FISSO / Fix		FLOTTANTE / Floating				
	BREMBO	ACCOSSATO	BREMBO	ACCOSSATO			
	68B40788	DK216					
	68B40788	DK216					
	68B40771	DK040					
	68B40771	DK040					
	68B40785	DK049			208973735	DKS021	
	68B40771	DK040					
	68B40771	DK040					
	68B40744	DK154			208973715	DKS015	DKR014
	68B40744	DK154			208973716	DKS016	DKR014
	68B40744	DK154			208973717	DKS017	
	68B40744	DK154			208973732	DKS019	
	68B40771	DK040					
	68B407E3	DK177					
	68B407E3	DK177					
	68B407E3	DK177					
	68B407E3	DK177					
	68B40785	DK049					
	68B40785	DK049					
	68B40771	DK040					
	68B40785	DK049					
	68B40785	DK049					
	68B40771	DK040					
	68B40785	DK049					
	68B40785	DK049					
	68B40785	DK049					
	68B40771	DK040					
	68B40744	DK154					
	68B40771	DK040					
	68B40744	DK154					
	68B40785	DK049			208973735	DKS021	
	68B40785	DK049					
	68B40771	DK040					
	68B40771	DK040					
	68B40771	DK040					
	68B40744	DK154					
	68B40771	DK040					
	68B40771	DK040					
	68B40744	DK154			208973715	DKS015	DKR014
	68B40744	DK154			208973716	DKS016	DKR014
	68B40744	DK154			208973717	DKS017	
	68B40744	DK154			208973732	DKS019	
	68B40771	DK040					
	68B407E3	DK177					
	68B407E3	DK177					
	68B40744	DK154			208973715	DKS015	DKR014
	68B40744	DK154			208973716	DKS016	DKR014
	68B40744	DK154			208973717	DKS017	
	68B40744	DK154			208973732	DKS019	DKR015
	68B40744	DK154					
	68B40744	DK154					
	68B40744	DK154			208973715	DKS015	
	68B40744	DK154			208973715	DKS015	
	68B407E3	DK177					
	68B40744	DK154					

dischi freno brake rotor

INDICE ANALITICO / index

MARCA / Brand	MODELLO / Model	CC	DA From	A To	DK: ANTERIORE / Front				
					FISSO / Fix		FLOTTANTE / Floating		
					BREMBO	ACCOSSATO	BREMBO	ACCOSSATO	
SUZUKI	GSX-R	1100	1989	1989					
SUZUKI	GSX-R	1100	1990	1992					
SUZUKI	GSX-R-W	1100	1993	2000					
SUZUKI	GSF-BANDIT	1200	1997	2005			78B408A0	DK144	
SUZUKI	GSF-BANDIT	1200	2006	→			78B40866	DK048	
SUZUKI	GSF-BANDIT-S	1200	1997	2005			78B408A0	DK144	
SUZUKI	GSX	1200	1999	2001					
SUZUKI	GSX	1200	2002	→					
SUZUKI	GSF-BANDIT	1250	2007	2011			78B40866	DK048	
SUZUKI	GSF-BANDIT-ABS	1250	2015	→			78B40866	DK048	
SUZUKI	GSF-BANDIT-S	1250	2011	2012			78B40866	DK048	
SUZUKI	GSF-BANDIT-S-ABS	1250	2011	→			78B40866	DK048	
SUZUKI	GSX-F	1250	2010	→					
SUZUKI	GSX-FA	1250	2010	→			78B40866	DK048	
SUZUKI	B-KING	1300	2008	2010			78B40866	DK048	
SUZUKI	GSX-R-HAYABUSA	1300	1999	2007			78B40875	DK041	
SUZUKI	GSX-R-HAYABUSA	1300	2008	→			78B40866	DK048	
SUZUKI	GSX	1400	2002	2007			78B40875	DK041	
TM									
TM	GS	125	1990	1992					
TM	MC	125	1990	1992					
TRIUMPH									
TRIUMPH	BABY-SPEED	600	2001	2002					
TRIUMPH	DAYTONA	600	2003	2007					
TRIUMPH	SPEED-FOUR	600	2003	2006					
TRIUMPH	TT	600	2000	2003					
TRIUMPH	DAYTONA	675	2006	2012			78B40862	DK128	
TRIUMPH	DAYTONA	675	2013	→			78B40859	DK203	
TRIUMPH	DAYTONA-R	675	2011	2012			78B40862	DK128	
TRIUMPH	DAYTONA-R	675	2013	→			78B40859	DK203	
TRIUMPH	SPEED TRIPLE	675	2007	2009					
TRIUMPH	STREET-TRIPLE	675	2007	2012			78B40862	DK128	
TRIUMPH	STREET-TRIPLE	675	2013	→			78B40869	DK206	
TRIUMPH	STREET-TRIPLE-R	675	2007	2012			78B40862	DK128	
TRIUMPH	STREET-TRIPLE-R	675	2013	→			78B40869	DK206	
TRIUMPH	STREET-TRIPLE-RX	675	2015	→			78B40869	DK206	
TRIUMPH	BONNEVILLE	800	2001	2006					
TRIUMPH	TIGER	800	2011	2014			78B40847	DK125	
TRIUMPH	TIGER-ABS	800	2011	2014			78B40847	DK125	
TRIUMPH	TIGER-XC	800	2011	2014			78B40847	DK125	
TRIUMPH	TIGER-XC	800	2015	→			78B40862	DK128	
TRIUMPH	TIGER-XC-ABS	800	2011	2014			78B40847	DK125	
TRIUMPH	TIGER-XCx	800	2015	→			78B40862	DK128	
TRIUMPH	TIGER-XR	800	2015	→			78B40862	DK128	
TRIUMPH	TIGER-XRx	800	2015	→			78B40862	DK128	
TRIUMPH	BONNEVILLE	865	2007	2008					
TRIUMPH	BONNEVILLE-SE	865	2009	2011					
TRIUMPH	BONNEVILLE-T100	865	2005	→	68B407K2	DK068			
TRIUMPH	SCRAMBLER	865	2006	2008					
TRIUMPH	SCRAMBLER-IE	865	2006	2014					
TRIUMPH	T509-SPEED-TRIPLE	855	1997	1998			78B40874	DK134	
TRIUMPH	THRUXTON	865	2004	2007					
TRIUMPH	THRUXTON-IE	865	2008	2014					
TRIUMPH	SPEED-TRIPLE	900	1999	→					
TRIUMPH	SPEED-TRIPLE-T509	900	1997	1998			78B40874	DK134	
TRIUMPH	THRUXTON	900	2004	2011					
TRIUMPH	TIGER	900	1993	1998	68B407E9	DK098			
TRIUMPH	DAYTONA-T595	950	1996	1998			78B40874	DK134	
TRIUMPH	DAYTONA-T955I	955	1999	2001			78B40874	DK134	
TRIUMPH	DAYTONA-T955I	955	2002	2006			78B40873	DK133	
TRIUMPH	SPEED-TRIPLE	955	1999	2001			78B40874	DK134	

	DK: POSTERIORE / Rear				DISCO S. SPORT BREMBO	DKS OEM ANTERIORE Front	DKR ANTERIORE Front
	FISSO / Fix		FLOTTANTE / Floating				
	BREMBO	ACCOSSATO	BREMBO	ACCOSSATO			
	68B40771	DK040					
	68B40771	DK040					
	68B40771	DK040					
	68B40771	DK040					
	68B40785	DK049					
	68B40771	DK040					
	68B40771	DK040					
	68B40771	DK040					
	68B40785	DK049					
	68B40785	DK049					
	68B40785	DK049					
	68B40785	DK049					
	68B40771	DK040					
	68B40785	DK049					
					208973735	DKS021	
	68B40771	DK040			208973715	DKS015	
					208973735	DKS021	
				TM			
	68B40756	DK031					
	68B40756	DK031					
				TRIUMPH			
	68B40749	DK003					
	68B40749	DK003					
	68B40749	DK003					
	68B40749	DK003					
	68B40749	DK003			208973730	DKS024	
	68B407H6	DK191			208973759	DKS023	
	68B40749	DK003					
	68B407H6	DK191			208973759	DKS023	
					208973730	DKS024	
	68B40749	DK003			208973730	DKS024	
	68B407H6	DK191			208973756	DKS27	
	68B40749	DK003			208973730	DKS024	
	68B407H6	DK191			208973756	DKS27	
	68B407H6	DK191					
	68B407A4	DK172					
	68B40749	DK003					
	68B407A4	DK172					
	68B40749	DK003					
	68B407N6	DK198					
	68B407A4	DK172					
	68B407N6	DK198					
	68B407N6	DK198					
	68B407N6	DK198					
	68B407A4	DK172					
	68B407A4	DK172					
	68B407A4	DK172					
	68B407A4	DK172					
	68B407A4	DK172					
	68B40749	DK003					
	68B407A4	DK172					
	68B407A4	DK172					
	68B40749	DK003					
	68B40749	DK003					
	68B407A4	DK172					
	68B40749	DK003					
	68B40749	DK003					
	68B40749	DK003					
	68B40749	DK003					

dischi freno brake rotor

INDICE ANALITICO / index

MARCA / Brand	MODELLO / Model	CC	DA From	A To	DK: ANTERIORE / Front			
					FISSO / Fix		FLOTTANTE / Floating	
					BREMBO	ACCOSSATO	BREMBO	ACCOSSATO
TRIUMPH	SPEED-TRIPLE	955	2002	2004			78B40873	DK133
TRIUMPH	SPRINT-RS	955	1999	2004			78B40874	DK134
TRIUMPH	SPRINT-ST	955	1998	2004			78B40874	DK134
TRIUMPH	SPEED TRIPLE S	1050	2005	2007				
TRIUMPH	SPEED-TRIPLE	1050	2005	2006			78B40881	DK137
TRIUMPH	SPEED-TRIPLE	1050	2007	2008			78B40872	DK132
TRIUMPH	SPEED-TRIPLE	1050	2009	→			78B40872	DK132
TRIUMPH	SPEED-TRIPLE-ABS	1050	2007	2008			78B40872	DK132
TRIUMPH	SPEED-TRIPLE-ABS	1050	2009	→			78B40872	DK132
TRIUMPH	SPEED-TRIPLE-R	1050	2012	2013			78B40881	DK137
TRIUMPH	SPEED-TRIPLE-R	1050	2014	→			78B40872	DK132
TRIUMPH	SPEED-TRIPLE-R-ABS	1050	2012	2013			78B40881	DK137
TRIUMPH	SPEED-TRIPLE-R-ABS	1050	2014	→			78B40872	DK132
TRIUMPH	SPRINT-GT	1050	2010	→			78B40872	DK132
TRIUMPH	SPRINT-ST	1050	2005	2010			78B40873	DK133
TRIUMPH	SPRINT-ST-ABS	1050	2005	2010			78B40873	DK133
TRIUMPH	SPRINT-ST-i	1050	2011	2012			78B40872	DK132
TRIUMPH	SPRINT-ST-i-ABS	1050	2011	2012			78B40872	DK132
TRIUMPH	TIGER	1050	2007	2011			78B40881	DK137
TRIUMPH	TIGER-SE	1050	2010	2013			78B40881	DK137
TRIUMPH	TIGER-SPORT-ABS	1050	2013	→			78B40881	DK137
TRIUMPH	TIGER-EXPLORER	1200	2012	→			78B40847	DK125
TRIUMPH	TIGER-EXPLORER-XC	1200	2013	→			78B40847	DK125
TRIUMPH	TIGER-XC	1200	2013	→			78B40847	DK125
TRIUMPH	TROPHY	1215	2012	→			78B40872	DK132
TRIUMPH	TROPHY-SE	1215	2012	→			78B40872	DK132
TRIUMPH	ROCKET-III	2300	2004	2009			78B40873	DK133
TRIUMPH	ROCKET-III-CLASSIC	2300	2007	2009			78B40873	DK133
TRIUMPH	ROCKET-III-ROADSTER-ABS	2300	2010	→			78B40873	DK133
TRIUMPH	ROCKET-X	2300	2015	→			78B40873	DK133
VOXAN								
VOXAN	BLACK-MAGIC	1000	2006	→			78B40870	DK022
VOXAN	CAFE'-RACER	1000	1999	2006			78B40870	DK022
VOXAN	ROADSTER	1000	2000	2006			78B40870	DK022
YAMAHA								
YAMAHA	NEO'S	50	1996	2006	68B40717	DK227		
YAMAHA	OVETTO	50	1996	→	68B40717	DK227		
YAMAHA	TZR	50	1993	2002	68B40791	DK008		
YAMAHA	NEO'S	100	1996	→	68B40717	DK227		
YAMAHA	NEO'S	100	2000	2002	68B40717	DK227		
YAMAHA	DT-R	125	1992	2003				
YAMAHA	DT-RE	125	2005	2006	68B407M5	DK086		
YAMAHA	DT-X-SUPERMOTARD	125	2005	2006			78B40843	DK122
YAMAHA	MAJESTY	125	1998	2000	68B407G3	DK201		
YAMAHA	MAJESTY	125	2001	2009	68B407G3	DK201		
YAMAHA	MAXSTER	125	2001	→				
YAMAHA	SR	125	1995	→				
YAMAHA	TDR	125	1989	1999				
YAMAHA	TDR-R	125	1993	→			78B40870	DK022
YAMAHA	TEO'S	125	1999	2002	68B407G3	DK201		
YAMAHA	TEO'S	125	2003	→	68B407G3	DK201		
YAMAHA	TZR-R	125	1991	→			78B40870	DK022
YAMAHA	WR	125	1989	1989				
YAMAHA	WR	125	1990	1997				
YAMAHA	WR	125	2001	2007			78B40813	DK111
YAMAHA	X-MAX	125	2005	2013	68B407C2	DK029	78B40817	DK056
YAMAHA	X-MAX	125	2014	→	68B407C2	DK029	78B40817	DK056
YAMAHA	X-MAX-ABS	125	2013	→	68B407C2	DK029	78B40817	DK056
YAMAHA	XV-S-DRAG-STAR	125	1999	2002	68B407D0	DK094		
YAMAHA	XV-S-VIRAGO	125	1997	2000	68B407D0	DK094		
YAMAHA	XV-VIRAGO	125	1997	2001	68B407D0	DK094		

ACCOSSATO

dischi freno brake rotor

INDICE ANALITICO / index

	DK: POSTERIORE / Rear				DISCO S. SPORT BREMBO	DKS OEM ANTERIORE Front	DKR ANTERIORE Front
	FISSO / Fix		FLOTTANTE / Floating				
	BREMBO	ACCOSSATO	BREMBO	ACCOSSATO			
	68B40749	DK003					
	68B407A4	DK172					
	68B407A4	DK172					
	68B40749	DK003					
	68B40749	DK003					
	68B407A4	DK172					
	68B40749	DK003			208973723	DKS022	
	68B40749	DK003					
	68B40749	DK003					
	68B407A4	DK172					
	68B407A4	DK172					
	68B407A4	DK172					
	68B40749	DK003					
	68B407A4	DK172					
	68B40749	DK003					
	68B407A4	DK172					
	68B40749	DK003			208973723	DKS022	
	68B40749	DK003					
	68B407A4	DK172					
	68B407H5	DK190					
	68B407H5	DK190					
	68B407H5	DK190					
	68B407H5	DK190					
	68B407H5	DK190					
VOXAN							
YAMAHA							
	68B40756	DK031					
	68B407M5	DK086					
	68B407G1	DK218					
	68B407G2	DK219					
	68B407E4	DK033					
	68B40756	DK031					
	68B407G2	DK219					
	68B40756	DK031					
	68B40756	DK031					
	68B40790	DK168					
	68B40778	DK213					
	68B407N9	DK199					

dischi freno brake rotor

INDICE ANALITICO / index

MARCA / Brand	MODELLO / Model	CC	DA From	A To	DK: ANTERIORE / Front			
					FISSO / Fix		FLOTTANTE / Floating	
					BREMBO	ACCOSSATO	BREMBO	ACCOSSATO
YAMAHA	YZ	125	1985	1989				
YAMAHA	YZ	125	1990	1997				
YAMAHA	YZ	125	1998	2001			78B40813	DK111
YAMAHA	YZ	125	2002	→			78B40813	DK111
YAMAHA	MAJESTY	150	1998	2000	68B407G3	DK201		
YAMAHA	MAJESTY	150	2001	2002	68B407G3	DK201		
YAMAHA	MAXSTER	150	2001	→				
YAMAHA	TEO'S	150	2003	→	68B40791	DK008		
YAMAHA	MAJESTY	180	2001	2006	68B407G3	DK201		
YAMAHA	DT	200	1989	→				
YAMAHA	WR	200	1992	1995				
YAMAHA	FZX-ZEAL	250	1991	→			78B40870	DK022
YAMAHA	MAJESTY	250	1996	1997	68B40791	DK008		
YAMAHA	MAJESTY-ABS	250	1998	1999	68B40791	DK008		
YAMAHA	MAJESTY-ABS	250	2000	2005	68B40791	DK008		
YAMAHA	TDR	250	1989	1992			78B40870	DK022
YAMAHA	TT	250	2000	→				
YAMAHA	TZR	250	1989	1989			78B40870	DK022
YAMAHA	TZR	250	1990	1992			78B40870	DK022
YAMAHA	WR	250	1990	1991				
YAMAHA	WR	250	1992	1997				
YAMAHA	WR	250	2001	2007			78B40813	DK111
YAMAHA	WR-F	250	2001	2002			78B40813	DK111
YAMAHA	WR-F	250	2003	→			78B40813	DK111
YAMAHA	X-CITY	250	2007	→				
YAMAHA	X-MAX	250	2005	2013	68B407C2	DK029	78B40817	DK056
YAMAHA	X-MAX	250	2014	→	68B407C2	DK029	78B40817	DK056
YAMAHA	X-MAX-ABS	250	2013	→	68B407C2	DK029	78B40817	DK056
YAMAHA	X-MAX-SPORT	250	2011	2013	68B407C2	DK029	78B40817	DK056
YAMAHA	X-MAX-SPORT	250	2014	→	68B407C2	DK029	78B40817	DK056
YAMAHA	XV-S-VIRAGO	250	1995	2007	68B407D0	DK094		
YAMAHA	XV-VIRAGO	250	1995	1987	68B407D0	DK094		
YAMAHA	YZ	250	1985	1989				
YAMAHA	YZ	250	1990	1997				
YAMAHA	YZ	250	1998	2001			78B40813	DK111
YAMAHA	YZ	250	2002	→			78B40813	DK111
YAMAHA	YZ-F	250	2001	2002			78B40813	DK111
YAMAHA	YZ-F	250	2003	→			78B40813	DK111
YAMAHA	YZF-F	250	2003	2005			78B40813	DK111
YAMAHA	XC-VERSITY	300	2003	2004				
YAMAHA	XC-VERSITY	300	2004	2006				
YAMAHA	YZF-R3	321	2015	→			78B40849	DK077
YAMAHA	RD-LC	350	1985	1993	68B407E4	DK033		
YAMAHA	YZ	360	1989	→				
YAMAHA	YZ	360	1990	1993				
YAMAHA	FZ-R	400	1985	→				
YAMAHA	MAJESTY	400	2004	2007	68B407C3	DK093	78B40817	DK056
YAMAHA	MAJESTY-ABS	400	2008	→	68B407C3	DK093	78B40817	DK056
YAMAHA	SRX	400	1991	→				
YAMAHA	WR-F	400	1998	2000			78B40813	DK111
YAMAHA	XJR	400	1995	2000				
YAMAHA	X-MAX	400	2014	→			78B40835	DK076
YAMAHA	X-MAX-ABS	400	2014	→			78B40835	DK076
YAMAHA	YZ-F	400	1998	2000			78B40813	DK111
YAMAHA	WR-F	426	2001	2002			78B40813	DK111
YAMAHA	YZ-F	426	2001	2002			78B40813	DK111
YAMAHA	WR-F	450	2003	→			78B40813	DK111
YAMAHA	YZ-F	450	2003	→			78B40813	DK111
YAMAHA	RD-LC	500	1984	1988	68B407E4	DK033		
YAMAHA	T-MAX	500	2001	2003	68B407D0	DK094		
YAMAHA	T-MAX	500	2004	2007			78B40817	DK056

ACCOSSATO

dischi freno brake rotor

INDICE ANALITICO / index

	DK: POSTERIORE / Rear				DISCO S. SPORT BREMBO	DKS OEM ANTERIORE Front	DKR ANTERIORE Front
	FISSO / Fix		FLOTTANTE / Floating				
	BREMBO	ACCOSSATO	BREMBO	ACCOSSATO			
	68B40756	DK031					
	68B40756	DK031					
	68B40790	DK168					
	68B407G1	DK218					
	68B407G2	DK219					
	68B407G2	DK219					
	68B407G1	DK218					
	68B40755	DK212					
	68B40756	DK031					
	68B40756	DK031					
	68B40756	DK031					
	68B40756	DK031					
	68B40790	DK168					
	68B40790	DK168					
	68B40790	DK168					
	68B40778	DK213					
	68B40778	DK213					
	68B407N9	DK199					
	68B40778	DK213					
	68B40756	DK031					
	68B40756	DK031					
	68B40790	DK168					
	68B40790	DK168					
	68B40778	DK213					
	68B40778	DK213					
	68B407P0	DK200					
	68B407E4	DK033					
	68B40756	DK031					
	68B40756	DK031					
	68B407E4	DK033					
	68B407C4	DK174					
	68B407C4	DK174					
	68B40791	DK008					
	68B40756	DK031					
	68B40791	DK008					
	68B407C4	DK174					
	68B407C4	DK174					
	68B40756	DK031					
	68B40790	DK168					
	68B40790	DK168					
	68B40790	DK168					
	68B40790	DK168					
	68B407E4	DK033					
	68B407E4	DK033					

dischi freno brake rotor

INDICE ANALITICO / index

MARCA / Brand	MODELLO / Model	CC	DA From	A To	DK: ANTERIORE / Front			
					FISSO / Fix		FLOTTANTE / Floating	
					BREMBO	ACCOSSATO	BREMBO	ACCOSSATO
YAMAHA	T-MAX	500	2008	2011			78B40818	DK071
YAMAHA	T-MAX-ABS	500	2008	2011			78B40818	DK071
YAMAHA	T-MAX-BLACK-MAX	500	2004	2007			78B40817	DK056
YAMAHA	WR	500	1992	1993				
YAMAHA	T-MAX	530	2012	→			78B40817	DK056
YAMAHA	T-MAX-ABS	530	2012	→			78B40817	DK056
YAMAHA	T-MAX-BRONZE-MAX/ABS	530	2013	→			78B40817	DK056
YAMAHA	T-MAX-IRON-MAX	530	2015	→			78B40817	DK056
YAMAHA	XV-VIRAGO	535	1996	2000			78B40830	DK118
YAMAHA	DIVERSION	600	2009	→			78B40831	DK119
YAMAHA	FZ6-FAZER	600	2004	2008			78B40831	DK119
YAMAHA	FZ6-FAZER-S2	600	2007	2008			78B40831	DK119
YAMAHA	FZR	600	1989	1995			78B408A2	DK146
YAMAHA	FZR-R	600	1994	1995			78B408A2	DK146
YAMAHA	FZS-FAZER	600	1998	2000				
YAMAHA	FZS-FAZER	600	2001	2003				
YAMAHA	FZS-FAZER	600	2004	2008				
YAMAHA	SRX	600	1986	→	68B407E4	DK033		
YAMAHA	TT-E	600	1997	2000	68B407C1	DK030		
YAMAHA	TT-R	600	1998	2000	68B407C1	DK030		
YAMAHA	TT-RE	600	2004	2007	68B407C1	DK030		
YAMAHA	XJ6	600	2009	2011			78B40831	DK119
YAMAHA	XJ-DIVERSION	600	1991	1997				
YAMAHA	XJ-DIVERSION	600	1998	2003			78B40830	DK118
YAMAHA	XJ-DIVERSION	600	2009	2011			78B40831	DK119
YAMAHA	XJ-F	600	1983	1990	68B407E4	DK033		
YAMAHA	XJN	600	1998	2003			78B40830	DK118
YAMAHA	XT	600	1983	1985	68B407E4	DK033		
YAMAHA	XT	600	1986	1989	68B407E4	DK033		
YAMAHA	XT-E	600	1990	1994				
YAMAHA	XT-E	600	1995	→	68B407D0	DK094		
YAMAHA	XT-K	600	1983	1985	68B407E4	DK033		
YAMAHA	XT-K	600	1986	1989	68B407E4	DK033		
YAMAHA	XT-TENERE'	600	1983	1989	68B407E4	DK033		
YAMAHA	XTZ-TENERE'	600	1986	1991	68B407E4	DK033		
YAMAHA	YZF-R6	600	1999	2002			78B40830	DK118
YAMAHA	YZF-R6	600	2003	2004			78B40831	DK119
YAMAHA	YZF-R6	600	2005	→			78B40860	DK127
YAMAHA	YZF-R-THUNDER-CAT	600	1996	2004			78B40830	DK118
YAMAHA	XVS-DRAG-STAR	650	1997	2004			78B40830	DK118
YAMAHA	XVS-DRAG-STAR-CLASSIC	650	1998	2006			78B40830	DK118
YAMAHA	MT-03	660	2006	2011			78B40831	DK119
YAMAHA	SZR	660	1995	→			78B40870	DK022
YAMAHA	XT-R	660	2004	2013			78B40843	DK122
YAMAHA	XT-R	660	2014	→			78B40843	DK122
YAMAHA	XT-X	660	2004	2009			78B40894	DK142
YAMAHA	XTZ-TENERE'	660	1991	1996	68B407D0	DK094		
YAMAHA	XTZ-TENERE'	660	2008	2013			78B40843	DK122
YAMAHA	MT-07	700	2014	→				
YAMAHA	MT-07-ABS	700	2015	→				
YAMAHA	FZ	750	1985	1988	68B407E4	DK033		
YAMAHA	FZ-GENESIS	750	1989	1992			78B408A2	DK146
YAMAHA	FZR	750	1989	1992			78B40870	DK022
YAMAHA	FZR-GENESIS	750	1987	→			78B40870	DK022
YAMAHA	FZX	750	1987	→	68B407E4	DK033		
YAMAHA	XJ-F	750	1983	1988	68B407E4	DK033		
YAMAHA	XTZ-SUPERTENERE	750	1989	→				
YAMAHA	XV-VIRAGO	750	1987	1993	68B407E4	DK033		
YAMAHA	XV-VIRAGO	750	1994	2000	68B407D0	DK094		
YAMAHA	YZF-R	750	1993	1997			78B40870	DK022
YAMAHA	YZF-R7	750	1999	2001			78B40894	DK142

	DK: POSTERIORE / Rear				DISCO S. SPORT BREMBO	DKS OEM ANTERIORE Front	DKR ANTERIORE Front
	FISSO / Fix		FLOTTANTE / Floating				
	BREMBO	ACCOSSATO	BREMBO	ACCOSSATO			
	68B407E4	DK033					
	68B407E4	DK033					
	68B407E4	DK033					
	68B40756	DK031					
	68B407F8	DK182					
	68B407F8	DK182					
	68B407F8	DK182					
	68B407F8	DK182					
	68B40793	DK217					
	68B407H3	DK189			208973719	DKS026	
	68B407H3	DK189			208973719	DKS026	
	68B407H8	DK192					
	68B407H8	DK192					
	68B407H8	DK192					
	68B407H3	DK189					
	68B407H8	DK192					
	68B40756	DK031					
	68B40756	DK031					
	68B40793	DK217					
	68B407H8	DK192					
	68B407H8	DK192					
	68B407E4	DK033					
	68B40791	DK008					
	68B40742	DK032					
	68B40742	DK032					
	68B40742	DK032					
	68B40742	DK032					
	68B40742	DK032					
	68B40755	DK212			208973718	DKS025	
	68B40750	DK157			208973719	DKS026	
	68B40750	DK157			208973720	DKS028	DKR008
	68B407H8	DK192			208973718	DKS025	
	68B407H3	DK189			208973719	DKS026	
	68B407H8	DK192					
	68B407H8	DK192					
	68B40742	DK032					
	68B407H8	DK192					
	68B407L0	DK196					
	68B407L0	DK196					
	68B407E4	DK033					
	68B407E4	DK033					
	68B407E4	DK033					
	68B407E4	DK033					
	68B407C9	DK082					
	68B407E4	DK033					
	68B40791	DK008			208973710	DKS004	
	68B407H8	DK192					

dischi freno brake rotor

INDICE ANALITICO / index

MARCA / Brand	MODELLO / Model	CC	DA From	A To	DK: ANTERIORE / Front			
					FISSO / Fix		FLOTTANTE / Floating	
					BREMBO	ACCOSSATO	BREMBO	ACCOSSATO
YAMAHA	YZF-SP	750	1993	1997			78B40870	DK022
YAMAHA	FZ-8	800	2010	2013			78B40860	DK127
YAMAHA	FZS-FAZER	800	1998	1999				
YAMAHA	FZS-FAZER	800	2010	2012			78B40860	DK127
YAMAHA	MT-09	850	2014	→			78B40831	DK119
YAMAHA	MT-09-ABS	850	2014	→			78B40831	DK119
YAMAHA	MT-09-STREET-RALLY	850	2014	→			78B40831	DK119
YAMAHA	MT-09-STREET-RALLY-ABS	850	2014	→			78B40831	DK119
YAMAHA	TDM	850	1991	2001			78B408A2	DK146
YAMAHA	TRX	850	1995	2000			78B408A2	DK146
YAMAHA	TDM	900	2002	2010			78B40830	DK118
YAMAHA	TDM-ABS	900	2002	2010			78B40830	DK118
YAMAHA	XJ-DIVERSION	900	1994	→				
YAMAHA	XJ-F	900	1983	1990	68B407E4	DK033		
YAMAHA	XVS-MIDNIGHT-STAR	950	2009	→			78B40894	DK142
YAMAHA	FZ1	1000	2006	2011			78B40871	DK131
YAMAHA	FZ1-FAZER	1000	2006	2012			78B40871	DK131
YAMAHA	FZR	1000	1987	1988				
YAMAHA	FZR-EX-UP	1000	1989	1990			78B40870	DK022
YAMAHA	FZR-EX-UP	1000	1991	1991			78B40870	DK022
YAMAHA	FZR-EX-UP	1000	1992	1993			78B40870	DK022
YAMAHA	FZR-EX-UP	1000	1994	1995			78B40870	DK022
YAMAHA	FZR-GENESIS	1000	1987	1988			78B40870	DK022
YAMAHA	FZS-FAZER	1000	2001	2005			78B40830	DK118
YAMAHA	GTS	1000	1993	1996				
YAMAHA	YZF-R1	1000	2004	-				
YAMAHA	YZF-R1	1000	1998	2001			78B40830	DK118
YAMAHA	YZF-R1	1000	2002	2003			78B40830	DK118
YAMAHA	YZF-R1	1000	2004	2006			78B40871	DK131
YAMAHA	YZF-R1	1000	2007	2014			78B40860	DK127
YAMAHA	YZF-R1	1000	2015	→			78B40871	DK131
YAMAHA	YZF-R1M-SPECIAL-EDITION	1000	2015	→			78B40871	DK131
YAMAHA	YZF-R1-SP	1000	2006	→				
YAMAHA	YZF-THUNDER-ACE	1000	1996	1998			78B40830	DK118
YAMAHA	BT-BULLDOG	1100	2002	2006			78B40830	DK118
YAMAHA	FJ	1100	1984	1985	68B407D0	DK094		
YAMAHA	XVS-DRAG-STAR	1100	1999	2006			78B40830	DK118
YAMAHA	XV-VIRAGO	1100	1987	1993	68B407E4	DK033		
YAMAHA	FJ	1200	1988	1995			78B408A2	DK146
YAMAHA	FJ-ABS	1200	1988	1995				
YAMAHA	V-MAX	1200	1986	1992	68B407D0	DK094		
YAMAHA	V-MAX	1200	1993	2006			78B40830	DK118
YAMAHA	XJR	1200	1995	1998			78B40870	DK022
YAMAHA	XTZ-SUPERTENERE	1200	2010	2013			78B40860	DK127
YAMAHA	XVZ-VENTURE-ROYALE	1200	1984	1987			78B40830	DK118
YAMAHA	XVZ-VENTURE-ROYALE	1200	1996	2007			78B40830	DK118
YAMAHA	FJR-A	1300	2006	→				
YAMAHA	FJR-ABS	1300	2001	2004			78B40830	DK118
YAMAHA	FJR-ABS	1300	2006	→			78B40894	DK142
YAMAHA	FJR-AS	1300	2006	→				
YAMAHA	XJR	1300	1999	→			78B40830	DK118
YAMAHA	XJR-(BREMBO-CALIPER)	1300	1998	→			78B40870	DK022
YAMAHA	XJR-SP	1300	1999	→				
YAMAHA	XVS-MIDNIGHT-STAR	1300	2007	2011			78B40830	DK118
YAMAHA	WILD-STAR	1600	1999	2007			78B40830	DK118
YAMAHA	MT-01	1670	2005	→			78B40894	DK142
YAMAHA	XV-PC-ROAD-STAR-WARRIOR	1700	2002	2007			78B40830	DK118
YAMAHA	XV-ROADLINER	1900	2006	→			78B40830	DK118

ACCOSSATO

dischi freno brake rotor

INDICE ANALITICO / index

	DK: POSTERIORE / Rear				DISCO S. SPORT BREMBO	DKS OEM ANTERIORE Front	DKR ANTERIORE Front
	FISSO / Fix		FLOTTANTE / Floating				
	BREMBO	ACCOSSATO	BREMBO	ACCOSSATO			
	68B40791	DK008			208973710	DKS004	
	68B407C2	DK029			208973720	DKS028	
	68B407H8	DK192					
	68B407C2	DK029			208973720	DKS028	
	68B407L0	DK196					
	68B407L0	DK196					
	68B407L0	DK196					
	68B407L0	DK196					
	68B407H8	DK192					
	68B407H8	DK192					
	68B40791	DK008					
	68B40791	DK008					
	68B407E4	DK033					
	68B407H3	DK189			208973721	DKS029	
	68B407H3	DK189			208973721	DKS029	
	68B407E4	DK033					
	68B407E4	DK033					
	68B407E4	DK033					
	68B407E4	DK033					
	68B407E4	DK033					
	68B407E4	DK033					
	68B407E4	DK033					
	68B407D0	DK094					
							DKR008
	68B40791	DK008			208973718	DKS025	
	68B40755	DK212			208973718	DKS025	
	68B40750	DK157			208973721	DKS029	DKR008
	68B40750	DK157			208973720	DKS028	DKR008
	68B40750	DK157					
	68B40750	DK157					
	68B40750	DK157					
	68B407H8	DK192			208973718	DKS025	
	68B407E4	DK033					
	68B407D0	DK094					
	68B407D0	DK094					
	68B407D0	DK094					
	68B407D0	DK094					
	68B407D0	DK094					
	68B407D0	DK094					
	68B407E4	DK033					
	68B407D0	DK094					
	68B407D0	DK094					
	68B407D0	DK094					
	68B407D0	DK094					
	68B407D0	DK094					
	68B407E4	DK033					
	68B407E4	DK033					
	68B407E4	DK033					
	68B407E4	DK033					

APPLICAZIONI PER CODICE DISCO
applications for rotor code

DK
DK002

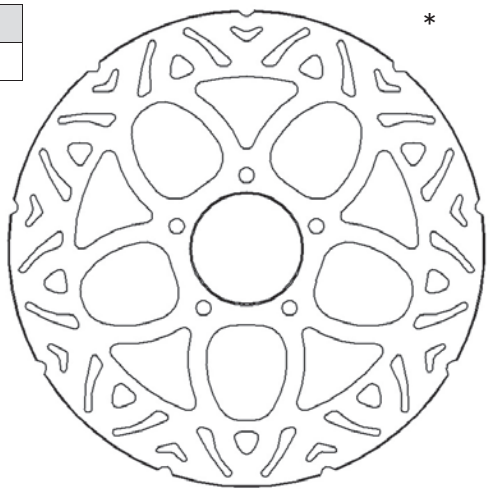

* **l'immagine del prodotto è puramente indicativa**
picture for illustrative purposes only

CODICE Reference	Ø ESTERNO Outer	Ø INTERNO Inner	SPESSORE Thickness	NR FORI No. holes	INTERASSE FORI Bolt patterns	Ø FORI Holes	CAMPANATURA Total height
DK002	260	60	4	5	80	8,5	0

CROSS REFERENCE		
ACCOSSATO	BREMBO	BRAKING
DK002	68B407B0	N.D.

CODICE OEM	
APRILIA	AP8113697
DERBI	AP8113541

DK002					
MODELLO Model	CC	DA From	A To	ANT. Front	POST. Rear
APRILIA					
SCARABEO	125	1999	2003	X	
SCARABEO	125	2004	2007	X	
SCARABEO GT	125	1999	2003	X	
SCARABEO I.E.	125	2008	→	X	
SPORTCITY	125	2005	2005	X	
SPORTCITY	125	2006	2007	X	
SPORTCITY CUBE	125	2009	→	X	
SCARABEO	150	1999	2003	X	
SCARABEO GT	200	2001	2006	X	
SCARABEO LIGHT	200	2007	→	X	
SPORTCITY	200	2004	2008	X	
SPORTCITY CUBE	200	2008	2010	X	
SCARABEO	250	2004	2005	X	
SCARABEO	250	2010	→	X	
SCARABEO I.E.	250	2006	2009	X	
SCARABEO LIGHT	250	2006	2008	X	
SPORTCITY	250	2006	2008	X	
SCARABEO LIGHT	300	2006	2010	X	
SCARABEO SPECIAL	300	2009	→	X	
SPORTCITY CUBE	300	2008	→	X	
ATLANTIC SPRINT	400	2006	→	X	
SCARABEO I.E.	400	2006	→	X	
SCARABEO LIGHT	400	2007	→	X	
SCARABEO URBAN	400	2006	2008	X	
ATLANTIC	500	2001	2005	X	
ATLANTIC SPRINT	500	2005	2005	X	
ATLANTIC SPRINT	500	2006	2008	X	
SCARABEO	500	2003	2006	X	
SCARABEO CLASSIC	500	2010	→	X	
SCARABEO GT ABS	500	2006	→	X	
SCARABEO LIGHT	500	2007	→	X	
SCARABEO URBAN	500	2006	2011	X	
DERBI					
BOULEVARD-S	125	2007	→	X	
RAMBLA	125	2009	2011	X	
RAMBLA	250	2009	→	X	
RAMBLA	300	2010	2011	X	

ACCOSSATO

dischi freno brake rotor

APPLICAZIONI PER CODICE DISCO / applications for rotor code

DK
DK003

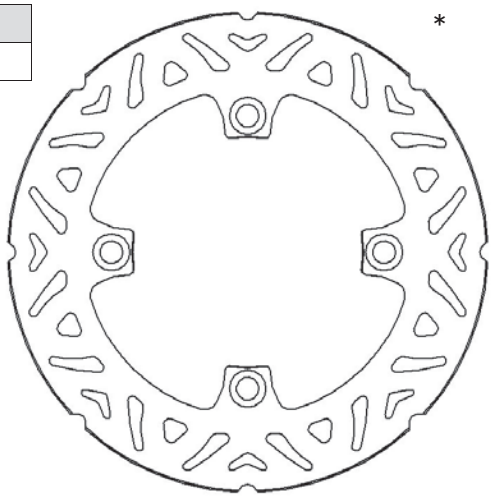

* **l'immagine del prodotto è puramente indicativa**
picture for illustrative purposes only

CODICE Reference	Ø ESTERNO Outer	Ø INTERNO Inner	SPESSORE Thickness	NR FORI No. holes	INTERASSE FORI Bolt patterns	Ø FORI Holes	CAMPANATURA Total height
DK003	220	105	5	4	125	10,5	0

CROSS REFERENCE		
ACCOSSATO	BREMBO	BRAKING
DK003	68B40749	HO22RI

CODICE OEM	
HONDA	/
PEUGEOT	755113
TRIUMPH	/

DK003					
MODELLO Model	CC	DA From	A To	ANT. Front	POST. Rear
HONDA					
PANTHEON-FES	125	2003	2007		X
S-WING/ABS	125	2007	2011		X
FORESIGHT	250	2000	2007		X
FORZA	250	2000	2004		X
HORNET	250	1997	→		X
JAZZ	250	2000	2004		X
VTR	250	1998	→		X
XELVIS	250	1997	1998		X
CB	400	1989	1991		X
CB-N	400	1982	1988		X
CBR-F	600	1991	1994		X
CBR-F	600	1995	1998		X

DK003					
MODELLO Model	CC	DA From	A To	ANT. Front	POST. Rear
CBR-F	600	1999	2000		X
CBR-F	600	2001	2007		X
CBR-F-SPORT	600	2001	2002		X
CBR-F3	600	2003	→		X
CBR-F4	600	2001	2006		X
CBR-RR	600	2003	→		X
CBR-RR-ABS	600	2009	2012		X
HORNET	600	1998	1999		X
HORNET/S	600	2000	2006		X
NX-DOMINATOR	650	1988	1992		X
XR-L	650	1993	2012		X
XR-R	650	1997	1999		X
CBR-RR	900	1992	1993		X
CBR-RR	900	1998	1999		X
CBR-RR	900	2000	2003		X
CBR-RR	929	1999	2001		X
CBR-RR	954	2002	2003		X
CBR-RR	1000	2004	2005		X
CBR-RR	1000	2006	2007		X
CBR-RR	1000	2008	→		X
CBR-RR-ABS	1000	2009	→		X
CBR-RR-FIREBLADE	1000	2014	→		X
VTR-F	1000	1997	2007		X
VTR-SP02	1000	2002	2004		X
VTR-SP1	1000	2000	2001		X
VTR-SP1	1000	2000	2001		X
VTR-SP2	1000	2002	2004		X
PEUGEOT					
SV	250	2002	2007		X
TRIUMPH					
BABY-SPEED	600	2001	2002		X
DAYTONA	600	2003	2007		X
SPEED-FOUR	600	2003	2006		X
TT	600	2000	2003		X
DAYTONA-R	675	2011	2012		X
STREET-TRIPLE	675	2007	2012		X
STREET-TRIPLE-R	675	2007	2012		X
T509-SPEED-TRIPLE	855	1997	1998		X
SPEED-TRIPLE	900	1999	→		X
SPEED-TRIPLE-T509	900	1997	1998		X
DAYTONA-T595	950	1996	1998		X
DAYTONA-T955I	955	1999	2001		X
DAYTONA-T955I	955	2002	2006		X
SPEED-TRIPLE	955	1999	2001		X
SPEED-TRIPLE	955	2002	2004		X
SPEED-TRIPLE	1050	2005	2006		X
SPEED-TRIPLE	1050	2007	2008		X
SPEED-TRIPLE-ABS	1050	2007	2008		X

dischi freno brake rotor

APPLICAZIONI PER CODICE DISCO / applications for rotor code

DK
DK004

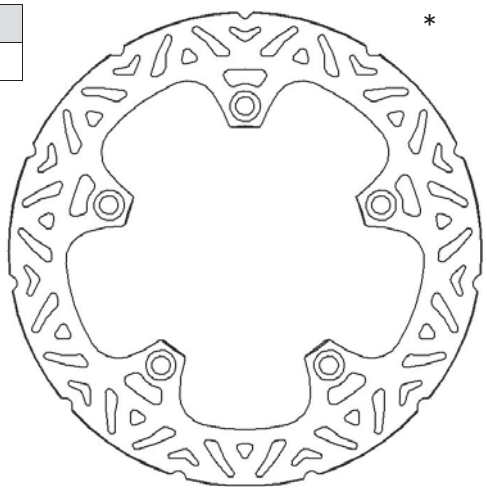

* l'immagine del prodotto è puramente indicativa
picture for illustrative purposes only

CODICE Reference	Ø ESTERNO Outer	Ø INTERNO Inner	SPESSORE Thickness	NR FORI No. holes	INTERASSE FORI Bolt patterns	Ø FORI Holes	CAMPANATURA Total height
DK004	265	136,5	5	5	160	10,5	0

CROSS REFERENCE		
ACCOSSATO	BREMBO	BRAKING
DK004	68B407C0	BW06RI

CODICE OEM	
BMW	/
HUSQVARNA	7664102

DK004					
MODELLO Model	CC	DA From	A To	ANT. Front	POST. Rear
BMW					
F-650-GS	650	2008	→		X
F-700-GS	700	2013	→		X
F-800-GS	800	2009	→		X

DK004					
MODELLO Model	CC	DA From	A To	ANT. Front	POST. Rear
F-800-GS-ADVENTURE	800	2014	→		X
F-800-GT	800	2013	→		X
F-800-R	800	2009	2011		X
F-800-S	800	2006	2007		X
F-800-S	800	2008	2010		X
F-800-ST	800	2006	2007		X
F-800-ST	800	2008	2012		X
S-1000-XR	1000	2015	→		X
HP2-ENDURO	1200	2006	2009		X
HP2-MEGAMOTO	1200	2007	2007		X
HP2-MEGAMOTO	1200	2008	2010		X
HP2-SPORT	1200	2008	2011		X
K-1200-R	1200	2005	2008		X
K-1200-R-SPORT	1200	2007	→		X
K-1200-S	1200	2005	2007		X
K-1200-S-ABS	1200	2005	2007		X
R-1200-GS	1200	2004	2007		X
R-1200-GS	1200	2008	2012		X
R-1200-GS-ABS	1200	2004	2007		X
R-1200-GS-ABS	1200	2008	2012		X
R-1200-GS-ADVENTURE	1200	2006	2007		X
R-1200-GS-ADVENTURE	1200	2008	2012		X
R-1200-R	1200	2006	2007		X
R-1200-R	1200	2008	2012		X
R-1200-R-DARK-WHITE	1200	2014	→		X
R-1200-RT	1200	2005	2007		X
R-1200-RT	1200	2008	2012		X
R-1200-S	1200	2006	2007		X
R-1200-S	1200	2008	→		X
R-1200-ST	1200	2005	2007		X
R-1200-ST	1200	2008	→		X
R-NINE-T	1200	2014	→		X
K-1300-R	1300	2008	2013		X
K-1300-S	1300	2009	2012		X
K-1300-S	1300	2015	→		X
HUSQUARNA					
NUDA R /ABS	900	2011	→		X
NUDA /ABS	900	2011	→		X

ACCOSSATO

dischi freno brake rotor

APPLICAZIONI PER CODICE DISCO / applications for rotor code

DK
DK005

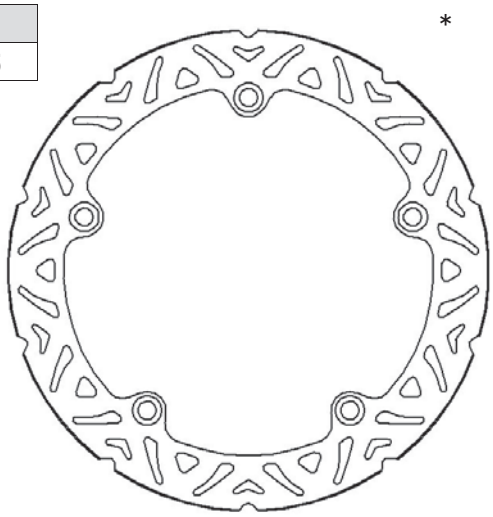

*

*** l'immagine del prodotto è puramente indicativa**
picture for illustrative purposes only

CODICE Reference	Ø ESTERNO Outer	Ø INTERNO Inner	SPESSORE Thickness	NR FORI No. holes	INTERASSE FORI Bolt patterns	Ø FORI Holes	CAMPANATURA Total height
DK005	276	176	5	5	198	10,5	0

CROSS REFERENCE		
ACCOSSATO	BREMBO	BRAKING
DK005	68B407C8	BW03RI

CODICE OEM	
BMW	/

DK005					
MODELLO Model	CC	DA From	A To	ANT. Front	POST. Rear
BMW					
R-850-C	850	1998	2001		X
R-850-GS	850	1998	2007		X
R-850-R	850	1994	2001		X
R-850-R	850	1995	2000		X
R-850-R	850	2002	2007		X
R-850-ROADSTER	850	1995	2000		X
R-850-RT	850	1995	2001		X
R-850-RT	850	2002	2004		X
R-850-RT-ABS	850	1995	2001		X
R-100-R	1000	1991	1996		X
R-1100-GS	1100	1994	2001		X
R-1100-R	1100	1995	2001		X
R-1100-R-ROADSTER	1100	1995	2001		X
R-1100-RS	1100	1985	1993		X
R-1100-RT	1100	1994	2001		X
R-1100-RT-ABS	1100	1994	2001		X
R-1100-S	1100	1998	2000		X
R-1100-S	1100	2001	2006		X
R-1100-S-BOXER	1100	2003	2006		X
R-1150-GS	1150	1999	2004		X
R-1150-GS-ADVENTURE	1150	2002	2005		X
R-1150-R	1150	2001	2006		X
R-1150-R-ROCKSTER	1150	2003	2006		X
R-1150-RS	1150	2001	2005		X
R-1150-RT	1150	2001	2005		X
R-1150-RT-ABS	1150	2001	2005		X

DK
DK006

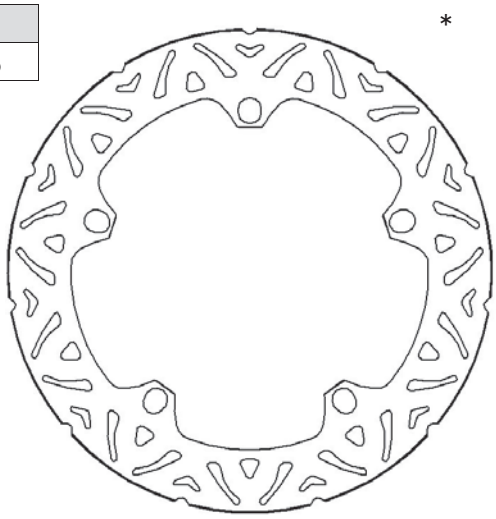

*

*** l'immagine del prodotto è puramente indicativa**
picture for illustrative purposes only

CODICE Reference	Ø ESTERNO Outer	Ø INTERNO Inner	SPESSORE Thickness	NR FORI No. holes	INTERASSE FORI Bolt patterns	Ø FORI Holes	CAMPANATURA Total height
DK006	305	181	5	5	230	14	0

CROSS REFERENCE		
ACCOSSATO	BREMBO	BRAKING
DK006	68B407D6	RH7003

CODICE OEM	
BMW	/

DK006					
MODELLO Model	CC	DA From	A To	ANT. Front	POST. Rear
BMW					
R-850-C	850	1998	2001	X	
R-850-GS	850	1998	2007	X	
R-850-R	850	2002	2007	X	
R-1100-GS	1100	1994	2001	X	
R-1100-S	1100	1998	2000	X	
R-1150-GS	1150	1999	2004	X	
R-1150-GS-ADVENTURE	1150	2002	2005	X	
HP2-ENDURO	1200	2006	2009	X	
K-1200-LT	1200	1999	2001	X	
K-1200-RS	1200	1997	2000	X	
R-1200-C	1200	1997	2001	X	
R-1200-C-CLASSIC	1200	2003	→	X	
R-1200-CL	1200	2002	2006	X	
R-1200-CRUISER	1200	1997	2001	X	
R-1200-GS-ADVENTURE	1200	2006	2007	X	

dischi freno brake rotor

APPLICAZIONI PER CODICE DISCO / applications for rotor code

DK
DK007

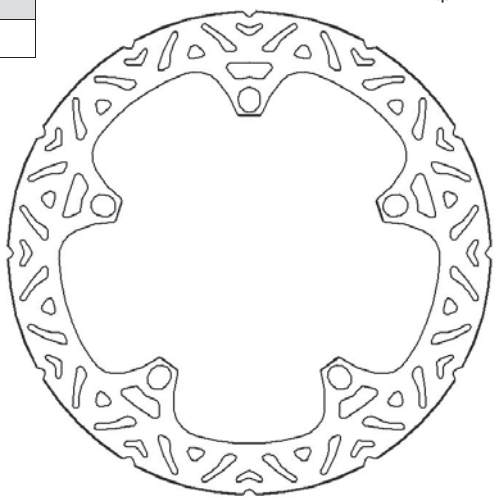

* l'immagine del prodotto è puramente indicativa
picture for illustrative purposes only

CODICE Reference	Ø ESTERNO Outer	Ø INTERNO Inner	SPESSORE Thickness	NR FORI No. holes	INTERASSE FORI Bolt patterns	Ø FORI Holes	CAMPANATURA Total height
DK007	320	181	5	5	203	14	0

CROSS REFERENCE		
ACCOSSATO	BREMBO	BRAKING
DK007	68B407D7	RH7004

CODICE OEM	
BMW	/

DK007					
MODELLO Model	CC	DA From	A To	ANT. Front	POST. Rear
BMW					
F-800-ABS	800	2004	2007	X	
F-800-S	800	2006	2007	X	
F-800-ST	800	2006	2007	X	
R-850-RT	850	2002	2004	X	
R-1100-S	1100	2001	2006	X	
R-1100-S-BOXER	1100	2003	2006	X	
R-1150-R	1150	2001	2006	X	
R-1150-R-ROCKSTER	1150	2003	2006	X	
R-1150-RS	1150	2001	2005	X	
R-1150-RT	1150	2001	2005	X	
R-1150-RT-ABS	1150	2001	2005	X	
HP2-MEGAMOTO	1200	2007	2007	X	
K-1200-GT	1200	2002	2007	X	
K-1200-LT	1200	2002	→	X	
K-1200-R	1200	2005	2008	X	
K-1200-R-SPORT	1200	2007	→	X	
K-1200-RS	1200	2001	2006	X	
K-1200-S	1200	2005	2007	X	
K-1200-S-ABS	1200	2005	2007	X	
R-1200-R	1200	2006	2007	X	
R-1200-RT	1200	2005	2007	X	
R-1200-S	1200	2006	2007	X	
R-1200-ST	1200	2005	2007	X	

DK008
DK008

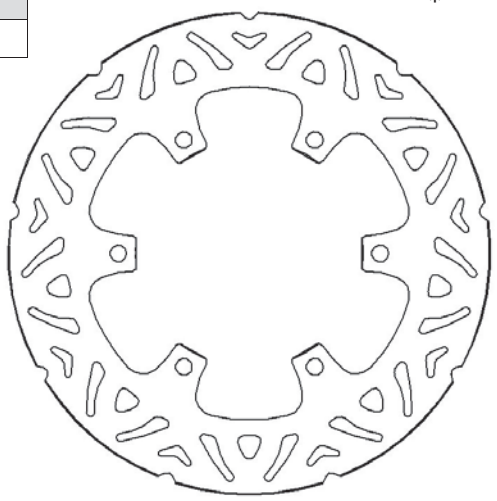

* l'immagine del prodotto è puramente indicativa
picture for illustrative purposes only

CODICE Reference	Ø ESTERNO Outer	Ø INTERNO Inner	SPESSORE Thickness	NR FORI No. holes	INTERASSE FORI Bolt patterns	Ø FORI Holes	CAMPANATURA Total height
DK008	245	115	4	6	133	8,5	0

CROSS REFERENCE		
ACCOSSATO	BREMBO	BRAKING
DK008	68B40791	YA08RI

CODICE OEM	
DUCATI	49240032A
LAVERDA	/
MBK	4HC2582T0000
MOTOR UNION	/
YAMAHA	5PX2581T0000
YAMAHA	4HC2582T0000

DK008					
MODELLO Model	CC	DA From	A To	ANT. Front	POST. Rear
DUCATI					
350-SUPERSPORT	350	1991	1992		X
400-SUPERSPORT	400	1993	1997		X
MONSTER-400	400	1995	1997		X
MONSTER-400-DARK	400	2003	→		X
MONSTSER-400	400	2001	2006		X
SCRAMBLER	400	2015	→		X
600-SUPERSPORT	600	1991	2000		X
MONSTER-600	600	1993	2002		X
MONSTER-600	600	1998	→		X
MONSTER-600-DARK	600	1998	→		X
MONSTER-600-DARK	600	2000	2001		X
MONSTER-600-DARK-CITY	600	1999	→		X
MONSTER-600-DARK-CITY	600	2000	2001		X
MONSTER-600-METALLIC	600	2000	2001		X
MONSTER-620-DARK-(MONODISCO)	620	2004	2005		X
MONSTER-620-I.E.	620	2005	2006		X
MONSTER-620-S-I.E.	620	2002	2004		X
MULTISTRADA-620-(BIDISCO)	620	2004	→		X
MULTISTRADA-620-SD	620	2004	2006		X
SPORT	620	2003	2004		X
SUPERSPORT	620	2002	2005		X

ACCOSSATO

dischi freno brake rotor

APPLICAZIONI PER CODICE DISCO / applications for rotor code

DK008					
MODELLO Model	CC	DA From	A To	ANT. Front	POST. Rear
MONSTER-695	695	2006	2007		X
MONSTER-696	696	2008	2012		X
MONSTER-696	696	2013	→		X
MONSTER-696-ABS	696	2008	2012		X
MONSTER-696-ABS	696	2013	→		X
MONSTER-696-ANNIVERSARY/ABS	696	2013	→		X
750-SPORT	750	2001	2002		X
750-SUPERSPORT	750	1991	1999		X
750-SUPERSPORT-I.E.	750	2000	2002		X
MONSTER-750-DARK-I.E.	750	2002	→		X
MONSTER-750	750	1994	2001		X
MONSTER-750	750	2000	2001		X
MONSTER-750-(BIDISCO)	750	1996	1997		X
MONSTER-750-(MONODISCO)	750	1996	1997		X
MONSTER-750-DARK	750	2000	2001		X
MONSTER-750-METALLIC	750	2000	2001		X
MONSTER-795	795	2012	2013		X
MONSTER-795	795	2014	→		X
MONSTER-795-ABS	795	2013	→		X
MONSTER-795-ABS-CORSE-STRIPE	795	2014	→		X
800-SPORT	803	2003	2004		X
MONSTER-800-S-I.E.	803	2003	2004		X
SCRAMBLER-CLASSIC	803	2015	→		X
SCRAMBLER-FULL-THROTTLE	803	2015	→		X
SCRAMBLER-ICON	803	2015	→		X
SCRAMBLER-URBAN-ENDURO	803	2015	→		X
SUPERSPORT-800	803	2006	→		X
SUPERSPORT-800-S	803	2003	2004		X
MONSTER-821	821	2015	→		X
MONSTER-821-DARK	821	2015	→		X
MONSTER-821-STRIPE	821	2015	→		X
851	851	1989	1991		X
851-SP5	851	1993	→		X
851-SP2	851	1990	→		X
851-SP3	851	1991	→		X
851-SP4	851	1992	→		X
888-SP	888	1990	1993		X
888-SUPERBIKE-STRADA	888	1994	1995		X
PANIGALE	899	2014	→		X
900-SUPERSPORT	900	1989	1990		X
900-SUPERSPORT	900	1991	1999		X
900-SUPERSPORT-I.E.	900	2000	2002		X
900-SUPERSPORT-S-I.E.	900	2002	→		X
MONSTER-900	900	1993	1999		X
MONSTER-900-CROMO	900	1998	→		X
MONSTER-900-CROMO-I.E.	900	2000	2001		X
MONSTER-900-DARK-CITY	900	1999	→		X
MONSTER-900-DARK-I.E.	900	2000	2002		X
MONSTER-900-I.E.	900	2000	→		X
MONSTER-900-METALLIC-I.E.	900	2000	2001		X
MONSTER-900-S-I.E.	900	2000	2001		X

DK008					
MODELLO Model	CC	DA From	A To	ANT. Front	POST. Rear
MONSTER-900-SPECIAL	900	1998	→		X
SPORT	900	2002	→		X
SUPERLIGHT-900	900	1992	1992		X
SUPERLIGHT-900	900	1993	1997		X
907-I.E.	907	1990	1991		X
907-I.E.	907	1992	1993		X
MONSTER-S4	916	2001	2003		X
MONSTER-S4-FOGGY	916	2002	→		X
ST4	916	1998	2004		X
ST4-S	916	2003	→		X
ST2	944	1997	2003		X
ST4-S	996	2001	2005		X
1000SS-S	1000	2003	→		X
1100SS	1000	2003	2006		X
GT-1000-TOURING	1000	2006	2010		X
MONSTER-1000-S-I.E.	1000	2003	2005		X
MONSTER-S2-R-1000	1000	2006	2007		X
MONSTER-S2-R-1000-DARK	1000	2006	2007		X
PAUL-SMART-I.E.	1000	2006	2007		X
SPORT	1000	2006	2008		X
SPORT-S	1000	2007	→		X
ST3	1000	2004	2006		X
ST3-S-ABS	1000	2006	2007		X
LAVERDA					
GHOST	650	1996	1999		X
SPORT	650	1995	2001		X
DIAMANTE	668	1996	1998		X
STRIKE	668	1997	1999		X
BLACK-STRIKE	750	2000	→		X
FORMULA	750	1997	1998		X
FORMULA	750	1999	2001		X
SPORT	750	1997	1998		X
STRIKE	750	1998	2001		X
SUPER-SPORT	750	1999	2000		X
T-8	800	1998	→		X
TSS	800	1998	→		X
MBK					
SKYLINER	250	2000	2003	X	
MOTOR UNION					
MAXI	125	1999	→	X	
MAXI	150	1999	→	X	
MAXI	400	1999	→	X	
YAMAHA					
TZR	50	1993	2002	X	
TEO'S	150	2003	→	X	
MAJESTY	250	1996	1997	X	
MAJESTY-ABS	250	1998	1999	X	
MAJESTY-ABS	250	2000	2005	X	
SRX	400	1991	→	X	
XJR	400	1995	2000	X	
XJN	600	1998	2003	X	
YZF-R	750	1993	1997	X	
YZF-SP	750	1993	1997	X	
TDM	900	2002	2010	X	
TDM-ABS	900	2002	2010	X	
YZF-R1	1000	1998	2001	X	

dischi freno brake rotor

APPLICAZIONI PER CODICE DISCO / applications for rotor code

DK
DK009

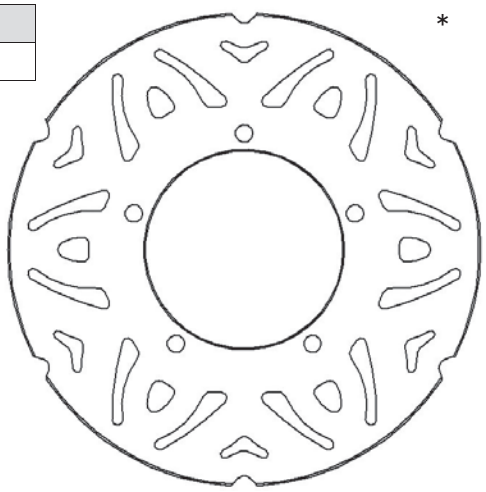

*

*** l'immagine del prodotto è puramente indicativa**
picture for illustrative purposes only

CODICE Reference	Ø ESTERNO Outer	Ø INTERNO Inner	SPESSORE Thickness	NR FORI No. holes	INTERASSE FORI Bolt patterns	Ø FORI Holes	CAMPANATURA Total height
DK009	175	73	4	5	86	6,5	0

CROSS REFERENCE		
ACCOSSATO	BREMBO	BRAKING
DK009	68B40713	ND

CODICE OEM	
DERBI	00G01302531
GILERA	56396R
PIAGGIO	56396R

DK009					
MODELLO Model	CC	DA From	A To	ANT. Front	POST. Rear
DERBI					
GP1	50	2001	2002		X
GP1-REPLICA	50	2001	2002		X
PREDATOR	125	1999	→		X
PREDATOR	180	1999	→		X
GILERA					
RUNNER			→		X
RUNNER-DD			2002		X
RUNNER-PURE-JET			→		X
RUNNER-RACING-REPLICA			→		X
RUNNER-SP					
RUNNER-SP					
STALKER					
STORM					
PIAGGIO					
ENERGY-EXTREME-DD	50	1999	→		X
NRG-EXTREME	50	1999	2000		X
NRG-MC3	50	2001	2004		X
NRG-POWER-DD	50	2005	2011		X
NRG-POWER-DD-SERIE-SPECIALE	50	2007	→		X
NRG-POWER-PUREJET	50	2004	→		X
NRG-PUREJET	50	2002	2004		X
NRG-PUREJET	50	2005	2010		X
NRG-RST-MC2	50	1996	1998		X
ZIP	50	2000	2004	X	
ZIP-2T	50	2008	2010	X	
ZIP-4T	50	2000	2010	X	
ZIP-II	50	2001	→	X	
ZIP-4T	100	2006	2010	X	
HEXAGON	125	1994	1997	X	
ZIP	125	2000	2002	X	
HEXAGON	150	1994	1997	X	
HEXAGON	180	1994	1998	X	

ACCOSSATO

dischi freno brake rotor

APPLICAZIONI PER CODICE DISCO / applications for rotor code

DK
DK010

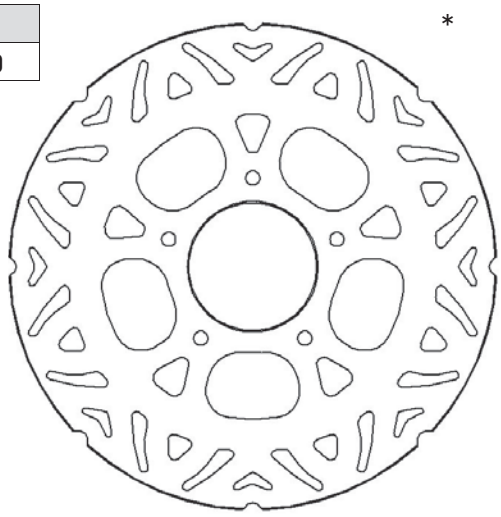

* **l'immagine del prodotto è puramente indicativa**
picture for illustrative purposes only

CODICE Reference	Ø ESTERNO Outer	Ø INTERNO Inner	SPESSORE Thickness	NR FORI No. holes	INTERASSE FORI Bolt patterns	Ø FORI Holes	CAMPANATURA Total height
DK010	220	58	4	5	80	6,5	0

CROSS REFERENCE		
ACCOSSATO	BREMBO	BRAKING
DK010	68B40730	ND

CODICE OEM	
APRILIA	561714
BETA	/
DERBI	/
GILERA	649226
KYMCO	156908
PIAGGIO	56484R
PIAGGIO	561714

DK010					
MODELLO Model	CC	DA From	A To	ANT. Front	POST. Rear
APRILIA					
SPORTCITY ONE 2T/4T	50	2008	→	X	
SPORTCITY ONE STREET	50	2009	→	X	
SPORTCITY ONE	125	2011	→	X	
BETA					
EIKON	125	2000	→	X	
EIKON	150	2000	→	X	
DERBI					
PREDATOR	125	1999	→		
PREDATOR	180	1999	→		

DK010					
MODELLO Model	CC	DA From	A To	ANT. Front	POST. Rear
GILERA					
RUNNER	50	1994	2000	X	
RUNNER	50	2001	→	X	
RUNNER-DD	50	1996	→	X	
RUNNER-PURE-JET	50	2003	→	X	
RUNNER-RACING-REPLICA	50	2003	→	X	
RUNNER-SP	50	2000	2001	X	
RUNNER-SP	50	2006	→	X	
RUNNER	125	2006	→	X	
RUNNER-FX-(GRIMECA CALIPER)	125	1997	2005	X	
RUNNER-FX-(HENGTONG CALIPER)	125	1997	2005	X	
RUNNER-FX-SP-(GRIMECA CALIPER)	125	1998	2005	X	
RUNNER-FX-SP-(HENGTONG CALIPER)	125	1998	2005	X	
RUNNER-VX-4T-(GRIMECA CALIPER)	125	1999	2004	X	
RUNNER-VX-4T-(HENGTONG CALIPER)	125	1999	2004	X	
RUNNER-FXR	180	1998	2004	X	
RUNNER-FXR-SP-(GRIMECA CALIPER)	180	1999	2005	X	
RUNNER-FXR-SP-(HENGTONG CALIPER)	180	1999	2005	X	
RUNNER-SP	180	1998	→	X	
RUNNER-VXR	180	1999	→	X	
RUNNER-VXR	180	2000	→	X	
HERCULES	200	2002	→	X	
RUNNER-SP	200	2001	2002	X	
RUNNER-VXR	200	2001	2004	X	
KYMCO					
B&W	50	2001	2002	X	
PIAGGIO					
CLASSIC-SPORT	50	1997	→	X	
ENERGY-EXTREME-DD	50	1999	→	X	
ENERGY-EXTREME-DT	50	1999	→	X	
NRG-EXTREME	50	1999	2000	X	
NRG-MC3	50	2001	2004	X	
NRG-PUREJET	50	2002	2004	X	
STEALTH	50	1998	→	X	
SKIPPER-4T	125	2000	2002	X	
SKIPPER-LX	125	1998	1999	X	
SKR	125	2001	2002	X	
STEALTH	125	1996	→	X	
VESPA-GRANTURISMO-L	125	2001	2003	X	X
SKIPPER-LXT-ST	150	1999	→	X	
SKR	150	2001	2002	X	
STEALTH	150	1996	→	X	
VESPA-GRANTURISMO-L	150	2001	→	X	X

dischi freno brake rotor

APPLICAZIONI PER CODICE DISCO / applications for rotor code

ACCOSSATO

DK
DK011

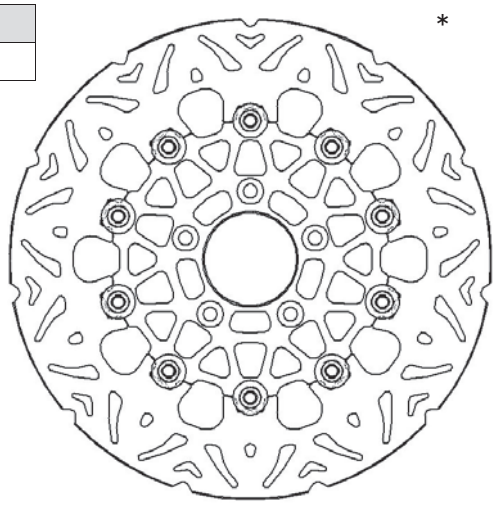

* l'immagine del prodotto è puramente indicativa
picture for illustrative purposes only

COLORI FASCIA FRENANTE / braking strip colours		
NERO	black	N

CODICE Reference	Ø ESTERNO Outer	Ø INTERNO Inner	SPESSORE Thickness	NR FORI No. holes	INTERASSE FORI Bolt patterns	Ø FORI Holes	CAMPANATURA Total height
DK011	292	56	5	5	82,5	8,5	0

CROSS REFERENCE		
ACCOSSATO	BREMBO	BRAKING
DK011	78B40891	HD01FL

CODICE OEM	
HARLEY DAVIDSON	/

DK011					
MODELLO Model	CC	DA From	A To	ANT. Front	POST. Rear
HARLEY DAVIDSON					
XL-883-R-ROADSTER	883	2010	2011	X	
XL-883-R-SPORTSTER	883	2000	2003	X	
XL-883-SPORTSTER-CUSTOM	883	2004	2010	X	
XL-L IRON	883	2009	2013	X	
XL-L-SPORTSTER-LOW	883	2007	2013	X	
XL-SPORTSTER-CUSTOM	883	2000	2003	X	
XLH-883-SPORTSTER	883	2000	2006	X	
XLH-883-SPORTSTER-HUGGER	883	2000	2003	X	
XL-1200-R	1200	2000	2006	X	
XL-1200-R-SPORTSTER-ROADSTER	1200	2004	2008	X	
XL-1200-SPORTSTER	1200	2004	2006	X	
XL-1200-SPORTSTER-CUSTOM	1200	2000	2003	X	
XL-1200-SPORTSTER-NIGHTSTER	1200	2007	2013	X	
XL-1200-SPORTSTER-SPORT	1200	2000	2003	X	
XL-C-SPORTSTER-CUSTOM	1200	2004	2013	X	
XL-L-SPORTSTER-LOW	1200	2007	2013	X	
XL-R-SPORTSTER-FORTY EIGHT	1200	2010	2011	X	
XL-S-SPORT	1200	2000	2003	X	

DK011					
MODELLO Model	CC	DA From	A To	ANT. Front	POST. Rear
XLH-1200-SPORTSTER	1200	2000	2003	X	
XR-1200	1200	2008	2010	X	
XR-1200-X	1200	2010	2012	X	
FLSTC-FAT-BOY	1340	2000	2002	X	
FLSTC-HERITAGE-SOFTAIL-CLASSIC	1340	2000	2002	X	
FXLR-1340-LOW-RIDER-CUSTOM	1340	2000	2000	X	
FXSTS-1340-SPRINGER-SOFTAIL	1340	2000	2002	X	
FLHR/I-ROAD-KING	1450	2000	2007	X	
FLHT/I ELECTRA-GLIDE-STANDARD	1450	2000	2006	X	
FLHTCUI-ELECTRA-GLIDE-ULTRA-CLAS.	1450	2000	2006	X	
FLSTC-HERITAGE-SOFTAIL-CLASSIC	1450	2000	2006	X	
FLSTF-FAT-BOY	1450	2000	2006	X	
FLSTS/I-HERITAGE-SPRINGER	1450	2000	2003	X	
FLTR/I-ROAD-GLIDE-CLASSIC	1450	2000	2007	X	
FXD-DYNA-SUPER-GLIDE	1450	2000	2003	X	
FXDL-DYNA-GLIDE-LOW-RIDER	1450	2000	2006	X	
FXDS-DYNA-SUPER-GLIDE-SPORT	1450	2000	2006	X	
FXDWG-DYNA-WIDE-GLIDE	1450	2000	2007	X	
FXDX-DYNA-SUPER-GLIDE-T-SPORT	1450	2000	2005	X	
FXST-SOFTAIL-STANDARD	1450	2000	2007	X	
FXSTB/I-NIGHT-TRAIN	1450	2000	2007	X	
FXSTC-SOFTAIL-CUSTOM	1450	2000	2006	X	
FXSTD-SOFTAIL-DEUCE	1450	2000	2006	X	
FXSTS/I-SPRINGER-SOFTAIL	1450	2000	2006	X	
FLHRCI-ROAD-KING-CLASSIC	1584	2007	2007	X	
FLHT/I ELECTRA-GLIDE-STANDARD	1584	2007	2007	X	
FLHTCUI-ELECTRA-GLIDE-ULTRA-CLAS.	1584	2007	2008	X	
FLHX-STREET-GLIDE	1584	2006	2007	X	
FLSTB-FAT-BOY-SPECIAL	1584	2010	2013	X	
FLSTB-SOFTAIL-CROSS-BONES	1584	2008	2001	X	
FLSTC-HERITAGE-SOFTAIL-CLASSIC	1584	2007	2014	X	
FLSTF-FAT-BOY	1584	2007	2014	X	
FLSTSE-CVO-SOFTAIL-CONVERTIBLE	1584	2010	2011	X	
FXCW-ROCKER	1584	2008	2009	X	
FXCWC-ROCKER-C	1584	2008	2013	X	
FXS-BLACKLINE	1584	2011	2013	X	
FXSTB-NIGHT-TRAIN	1584	2008	2010	X	
FXSTC-SOFTAIL-CUSTOM	1584	2008	2010	X	
FXSTSS-CVO-SOFTAIL-SPRINGER	1584	2009	2009	X	

ACCOSSATO

dischi freno brake rotor

APPLICAZIONI PER CODICE DISCO / applications for rotor code

DK
DK012

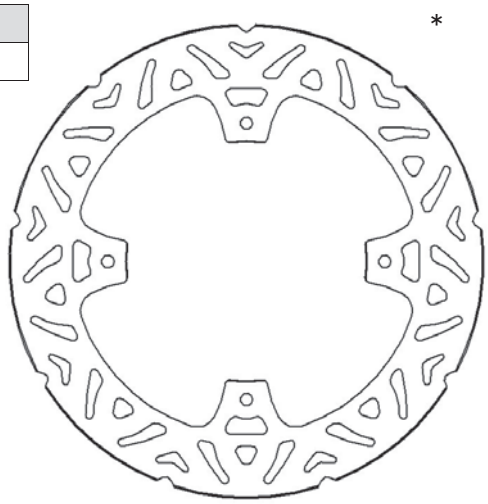

*

*** l'immagine del prodotto è puramente indicativa**
picture for illustrative purposes only

CODICE Reference	Ø ESTERNO Outer	Ø INTERNO Inner	SPESSORE Thickness	NR FORI No. holes	INTERASSE FORI Bolt patterns	Ø FORI Holes	CAMPANATURA Total height
DK012	240	121	4	4	140	6,25	0

CROSS REFERENCE		
ACCOSSATO	BREMBO	BRAKING
DK012	68B40786	ND

CODICE OEM	
HM	RDP003
HONDA	/

DK012					
MODELLO Model	CC	DA From	A To	ANT. Front	POST. Rear
HM					
CR-E-SUPERMOTARD	125	2000	2001		X
CR-E-SUPERMOTARD	125	2002	2003		X
CR-E-SUPERMOTARD	125	2004	2008		X
CRE-SUPERMOTARD	125	2003	2003		X
CRE-SUPERMOTARD	125	2004	2008		X
CRF-ENDURO	230	2004	2010		X
CRF-SUPERMOTARD	230	2004	2006		X
CR-E-SUPERMOTARD	250	2000	2001		X
CR-E-SUPERMOTARD	250	2002	2005		X
CR-E-SUPERMOTARD	250	2006	2009		X
CRE-F	250	2004	2009		X
CRE-SUPERMOTARD	250	2003	2005		X
CRE-X	250	2004	2009		X
CRE-X-ENDURO	250	2004	2009		X
CRF-R-SUPERMOTARD	250	2004	2008		X
CRF-X-SUPERMOTARD	250	2004	2008		X
CRF-R	450	2002	→		X
CRF-R-SUPERMOTARD	450	2002	2003		X
CRF-X-SUPERMOTARD	450	2004	2009		X
HONDA					
CR-E	125	2002	2008		X
CRF-SUPERMOTARD	125	2000	2005		X
CR-R	125	2002	2008		X
CR-E	250	2002	2008		X
CR-R	250	2002	2008		X
CRE-F	250	2000	2005		X
CRF	250	2015	→		X
CRF-R	250	2004	2014		X
CRF-R	250	2015	→		X
CRF-X	250	2004	2007		X
CRF-X	250	2008	2012		X
CR-F-SUPERMOTARD	450	2002	2003		X
CR-F-SUPERMOTARD	450	2004	→		X
CRF	450	2015	→		X
CRF R	450	2002	2014		X
CRF X	450	2004	2012		X

dischi freno brake rotor

APPLICAZIONI PER CODICE DISCO / applications for rotor code

DK
DK013

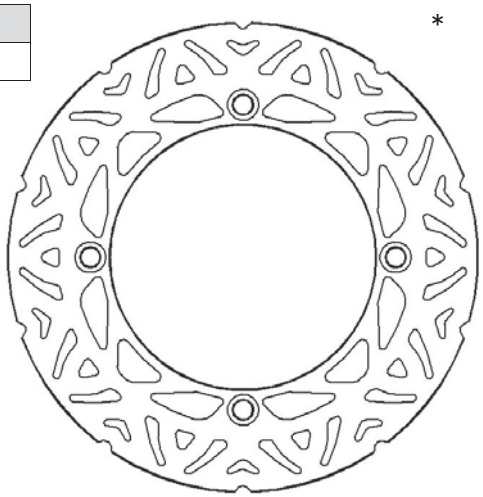

*

* **l'immagine del prodotto è puramente indicativa**
picture for illustrative purposes only

CODICE Reference	Ø ESTERNO Outer	Ø INTERNO Inner	SPESSORE Thickness	NR FORI No. holes	INTERASSE FORI Bolt patterns	Ø FORI Holes	CAMPANATURA Total height
DK013	256	144	4	4	166	10,5	0

CROSS REFERENCE		
ACCOSSATO	BREMBO	BRAKING
DK013	68B407A5	HO03FI

CODICE OEM	
HONDA	/

DK013					
MODELLO Model	CC	DA From	A To	ANT. Front	POST. Rear
HONDA					
CB-S-G	350	1987	→	X	
CB-S	450	1985	1989	X	
XL-V-TRANSALP	600	1997	1999	X	
NX-DOMINATOR	650	1988	1992	X	
NX-DOMINATOR	650	1993	2004	X	
XL-V-TRANSALP	650	2000	2007	X	
XR-L	650	1993	2012	X	
XL-700-V-TRANSALP	700	2008	2012	X	
XL-700-V-TRANSALP-ABS	700	2008	2012	X	
XRV-AFRICA-TWIN	750	1990	2002		X
XL-VARADERO	1000	1999	2002		X

DK
DK014

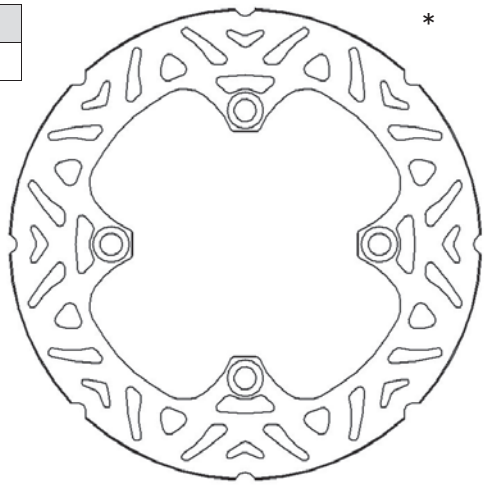

*

* **l'immagine del prodotto è puramente indicativa**
picture for illustrative purposes only

CODICE Reference	Ø ESTERNO Outer	Ø INTERNO Inner	SPESSORE Thickness	NR FORI No. holes	INTERASSE FORI Bolt patterns	Ø FORI Holes	CAMPANATURA Total height
DK014	220	105,5	4	4	125	10,5	0

CROSS REFERENCE		
ACCOSSATO	BREMBO	BRAKING
DK014	68B40740	HO09RI

CODICE OEM	
AXY	/
GARELLI	GA09119
HONDA	/
KEEWAY	44105T430000

DK014					
MODELLO Model	CC	DA From	A To	ANT. Front	POST. Rear
AXY					
GULP	125	2008	→	X	X
YUK	125	2007	→	X	X

DK014					
MODELLO Model	CC	DA From	A To	ANT. Front	POST. Rear
GULP	150	2008	→	X	X
YUK	150	2007	→	X	X
GULP	200	2008	→	X	X
YUK	200	2007	→	X	X
ROAR	300	2008	→	X	X
GARELLI					
MOSQUITO	150	2008	→	X	X
HONDA					
CHIOCCIOLA-NES	100	1995	→	X	
CBR-R	125	2003	2009		X
CBR-R-REPSOL	125	2003	2009		X
@-NES	125	2001	→	X	
DYLAN	125	2000	2007	X	
PSI	125	2006	2008	X	
SH-MODE	125	2014	→	X	
VARADERO	125	2001	2002		X
@-NES	150	2001	2006	X	
DYLAN	150	2000	2007	X	
PS-I	150	2006	2008	X	
SH	150	1998	2008	X	
CRF-L	250	2013	→		X
XLR-BAJA	250	1996	→		X
XR-R	250	1991	2004		X
XR-R	400	1995	2005		X
XR-R	400	2006	2007		X
XR-SUPERMOTARD	400	2000	2007		X
XR-R	440	2006	2007		X
XR-SUPERMOTARD	440	2006	2007		X
XR	500	1991	1993		X
XR-R	600	1988	1999		X
XR-R-DAKAR	600	1999	→		X
KEEWAY					
OUTLOOK	125	2008	→	X	X
OUTLOOK	151	2008	→	X	X

ACCOSSATO

dischi freno brake rotor

APPLICAZIONI PER CODICE DISCO / applications for rotor code

DK
DK015

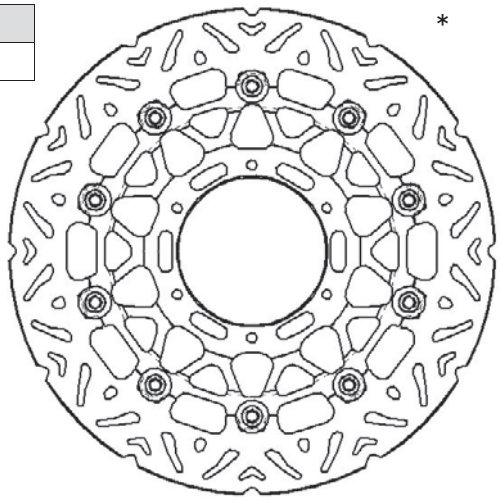

* **l'immagine del prodotto è puramente indicativa**
picture for illustrative purposes only

COLORI FASCIA FRENANTE / braking strip colours		
NERO	black	**N**
ROSSO	red	**R**

CODICE Reference	Ø ESTERNO Outer	Ø INTERNO Inner	SPESSORE Thickness	NR FORI No. holes	INTERASSE FORI Bolt patterns	Ø FORI Holes	CAMPANATURA Total height
DK015	310	94	5	6	110	6,5	12,5

CROSS REFERENCE		
ACCOSSATO	BREMBO	BRAKING
DK015	78B40867	STX47

CODICE OEM	
HONDA	/

DK015					
MODELLO Model	CC	DA From	A To	ANT. Front	POST. Rear
HONDA					
CBR-RR	600	2003	→	X	
CBR-RR-ABS	600	2009	2012	X	
CB-R	1000	2008	→	X	
CB-R-ABS	1000	2009	→	X	
CBR-RR	1000	2004	2005	X	
CB	1300	2003	2008	X	

DK
DK016

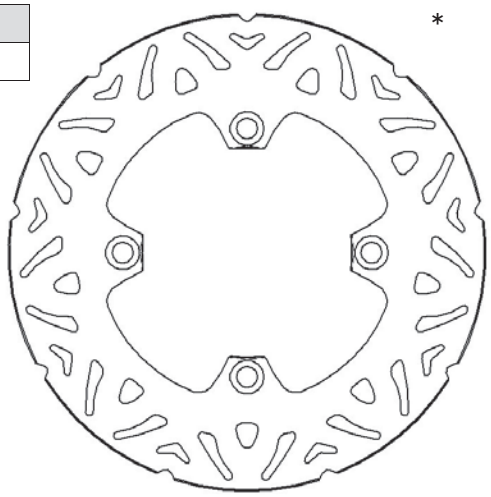

* **l'immagine del prodotto è puramente indicativa**
picture for illustrative purposes only

CODICE Reference	Ø ESTERNO Outer	Ø INTERNO Inner	SPESSORE Thickness	NR FORI No. holes	INTERASSE FORI Bolt patterns	Ø FORI Holes	CAMPANATURA Total height
DK016	240	105	5	4	125	10,5	0

CROSS REFERENCE		
ACCOSSATO	BREMBO	BRAKING
DK016	68B40780	H005RI & BL01RI

CODICE OEM	
BUELL	/
CAGIVA	800062819
HONDA	/

DK016					
MODELLO Model	CC	DA From	A To	ANT. Front	POST. Rear
BUELL					
M2	1200	1998	2002		X
M2-CYCLONE	1200	1998	2002		X
S1-LIGHTNING	1200	1998	2002		X
S3-THUNDERBOLT	1200	1998	2002		X
S3T-THUNDERBOLT	1200	1998	2002		X
X1	1200	1998	2002		X
CAGIVA					
ELEFANT	750	1994	1995		X
ELEFANT-I.E.	900	1990	1996		X
GRAN-CANYON	900	1999	2004		X
HONDA					
SH-ED	125	2009	→		X
SH-GT-ABS	125	2012	→		X
SH-ED	150	2009	→		X
SH-GT-ABS	150	2012	→		X
CB	250	1991	2006		X
FORZA-X/XE	250	1995	2007		X
FORZA-X/XE	250	2008	→		X
FORZA-NSS	300	2012	→		X
SILVER-WING	400	2006	2008		X
CB	500	1995	2003		X
CB-S	500	1998	2002		X
SILVER-WING	600	2000	2010		X
SILVER-WING-ABS	600	2003	→		X
XL-V-TRANSALP	600	1991	1993		X
XL-V-TRANSALP	600	1997	1999		X
XL-V-TRANSALP-VR/VT	600	1994	1996		X
XL-V-TRANSALP	650	2000	2007		X
XRV-AFRICA-TWIN	650	1988	1989		X
XL-700-V-TRANSALP	700	2008	2012		X
XL-700-V-TRANSALP-ABS	700	2008	2012		X
CB-SEVEN-FIFTY	750	1992	1995		X
HORNET	900	2002	2006		X

dischi freno brake rotor

APPLICAZIONI PER CODICE DISCO / applications for rotor code

DK
DK017

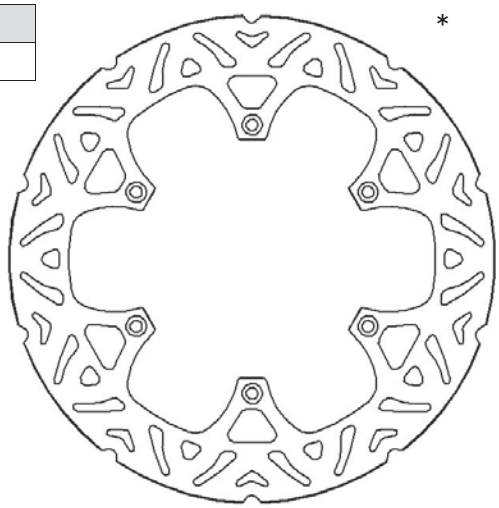

* l'immagine del prodotto è puramente indicativa
picture for illustrative purposes only

CODICE Reference	Ø ESTERNO Outer	Ø INTERNO Inner	SPESSORE Thickness	NR FORI No. holes	INTERASSE FORI Bolt patterns	Ø FORI Holes	CAMPANATURA Total height
DK017	260	127	3,5	6	143	6,5	0

CROSS REFERENCE		
ACCOSSATO	BREMBO	BRAKING
DK017	68B407B8	ND

CODICE OEM	
BETA	/
HUSABERG	/
HUSQVARNA	8000H0192
KTM	/

DK017					
MODELLO Model	CC	DA From	A To	ANT. Front	POST. Rear
BETA					
RR	250	2013	→	X	
RR	300	2013	→	X	
RR	350	2013	→	X	
RR	400	2013	→	X	
RR	450	2013	→	X	
RR	498	2013	→	X	
HUSABERG					
FE	390	2010	2012	X	
FE	400	2000	2003	X	
FE-E	400	2001	2003	X	
FS-C	400	2001	2003	X	
FS-E	400	2001	2003	X	
FE	450	2010	2012	X	
FX-E	450	2010	→	X	
FC-E	470	2001	2002	X	
CR	501	1999	2003	X	
FC	501	1999	2003	X	
FE-E	501	1999	2004	X	
FE-S	501	1999	2004	X	
FC-E	550	2001	2005	X	
FE-E	550	2004	2008	X	
FE	570	2010	2012	X	
FC	600	1999	2003	X	
FE-E	600	1999	2002	X	

DK017					
MODELLO Model	CC	DA From	A To	ANT. Front	POST. Rear
FE-E	650	2001	2008	X	
FX-E	650	2001	2005	X	
HUSQVARNA					
TC	125	2014	→	X	
TE	125	2014	→	X	
FC	250	2014	→	X	
FE	250	2014	→	X	
TC	250	2014	→	X	
TE	250	2014	→	X	
TC	300	2014	→	X	
TE	300	2014	→	X	
FC	350	2014	→	X	
FE	350	2014	→	X	
FC	450	2014	→	X	
FE	450	2014	→	X	
FE	501	2014	→	X	
KTM					
EXC	125	1998	→	X	
EXC-SIX-DAYS	125	2009	→	X	
GS	125	1993	1997	X	
MX	125	1989	1992	X	
SX	125	1993	→	X	
SXS	125	2000	2010	X	
SX	144	2007	2010	X	
SX	150	2008	→	X	
EXC	200	1998	→	X	
EXC-SIX-DAYS	200	2015	→	X	
MXC	200	1998	2003	X	
SX	200	2003	2009	X	
XC-W	200	2006	2009	X	
EXC	250	1998	→	X	
EXC-F	250	2003	2003	X	
EXC-F	250	2004	→	X	
EXC-F-SIX-DAYS	250	2009	→	X	
EXC-G	250	2004	2009	X	
EXC-SIX-DAYS	250	2009	→	X	
GS	250	1993	1997	X	
MX	250	1992	→	X	
MXC	250	1998	2003	X	
SX	250	1993	1997	X	
SX	250	1998	→	X	
SX-F	250	2003	→	X	
SXS	250	2003	2010	X	
SXS-F	250	2006	2009	X	
XC-F	250	2007	2012	X	
XC-W	250	2006	2012	X	
EXC	300	1997	→	X	
EXC-SIX-DAYS	300	2009	→	X	
GS	300	1991	1996	X	
MX	300	1991	1992	X	
MXC	300	1998	2005	X	
SX	300	1993	1996	X	
SX	300	1997	2003	X	
XC	300	2006	2012	X	
XC-W	300	2006	2012	X	
EXC-F	350	2010	→	X	
EXC-F-SIX-DAYS	350	2011	→	X	
GS	350	1993	→	X	
SXF	350	2011	→	X	
EXC	380	1998	2002	X	
MXC	380	1998	2001	X	

ACCOSSATO

dischi freno brake rotor

APPLICAZIONI PER CODICE DISCO / applications for rotor code

DK017					
MODELLO Model	CC	DA From	A To	ANT. Front	POST. Rear
SX	380	1998	2002	X	
EXC	400	1994	2011	X	
SX	400	2000	2002	X	
XC-W	400	2007	2009	X	
EXC	450	2003	→	X	
EXC-R	450	2008	2009	X	
EXC-SIX-DAYS	450	2009	→	X	
MXC	450	2003	2006	X	
SXF	450	2003	→	X	
SXS	450	2003	2010	X	
SXS-F	450	2003	2010	X	
XC	450	2006	2009	X	
XC-F	450	2007	2009	X	
XC-W	450	2007	2009	X	
EXC	500	2010	→	X	
EXC-SIX-DAYS	500	2011	→	X	
MX	500	1989	1993	X	
SX	500	1993	1995	X	
SX-F	505	2007	2009	X	
XC-F	505	2007	2009	X	
EXC	520	2000	2002	X	
MXC	520	2001	2002	X	

DK017					
MODELLO Model	CC	DA From	A To	ANT. Front	POST. Rear
SX-RACING	520	2000	2002	X	
EXC	525	2003	2008	X	
MXC	525	2003	2005	X	
SX	525	2003	2006	X	
SX-RACING	525	2005	2006	X	
XC	525	2006	2008	X	
XCG	525	2006	2008	X	
XCW	525	2006	2008	X	
EXC	530	2010	2011	X	
EXC-R	530	2008	2009	X	
EXC-SIX-DAYS	530	2009	→	X	
SXC	540	1998	2000	X	
SXS	540	2001	2006	X	
GS-4T	600	1993	→	X	
LC4	600	1990	1993	X	
MX	600	1990	1992	X	
LC4-SC-SUPERCOMPETITION	620	1998	2004	X	
LC4-SXC-SUPERMOTO	620	1999	2001	X	
LC4-SC-SUPERCOMPETITION	625	2002	→	X	
SXC	625	2003	2008	X	

DK
DK018

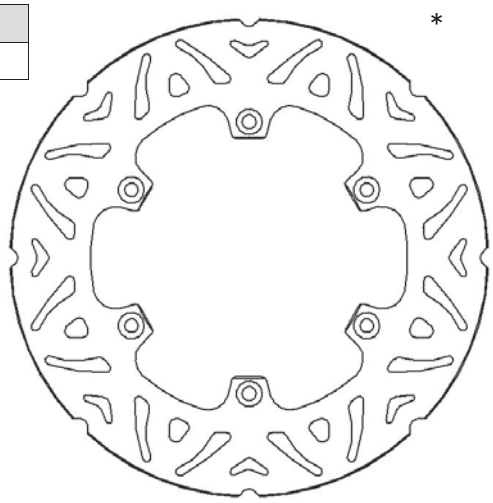

* **l'immagine del prodotto è puramente indicativa**
picture for illustrative purposes only

CODICE Reference	Ø ESTERNO Outer	Ø INTERNO Inner	SPESSORE Thickness	NR FORI No. holes	INTERASSE FORI Bolt patterns	Ø FORI Holes	CAMPANATURA Total height
DK018	220	110	4	6	125	6,5	0

CROSS REFERENCE		
ACCOSSATO	BREMBO	BRAKING
DK018	68B40752	ND

CODICE OEM	
CCM	/
GAS GAS	BE250422012
HUSABERG	/
HUSQVARNA	8B00H4977
KTM	/

DK018					
MODELLO Model	CC	DA From	A To	ANT. Front	POST. Rear
CCM					
DS	644	2002	2006		X
R30	644	2002	2006		X
GAS GAS					
EC	125	1996	2011		X
MC	125	1996	2009		X
EC	200	2004	2007		X
HOBBY	200	2007	→		X
EC	250	1996	2009		X
EC-2T	250	1996	2009		X
EC-4T	250	1996	2009		X
EC-F-RACING	250	2013	2013		X
EC-RACING	250	2012	→		X
MC	250	1996	2009		X
EC	300	1996	2009		X
EC-2T	300	2013	→		X
EC-F-RACING	300	2013	→		X
EC-RACING	300	2012	→		X
MC	300	1996	2009		X
EC	400	2002	2005		X
EC	400	2006	2007		X
FSE	400	2004	2007		X
MC	400	2002	2005		X
MC	400	2006	2007		X
PAMPERA	400	2006	2007		X
EC	450	2003	2007		X
FSE	450	2003	2007		X
FSR	450	2007	→		X
MC	450	2003	2006		X
MC	450	2007	→		X
PAMPERA	450	2007	2008		X

dischi freno brake rotor

APPLICAZIONI PER CODICE DISCO / applications for rotor code

DK018					
MODELLO Model	CC	DA From	A To	ANT. Front	POST. Rear
HUSABERG					
FE	390	2010	2012		X
FE	400	2000	2003		X
FE-E	400	2001	2003		X
FS-C	400	2001	2003		X
FS-E	400	2001	2003		X
FE	450	2010	2012		X
FS-E	450	2003	2008		X
FX-E	450	2010	→		X
FC	501	1999	2003		X
FE-E	501	1999	2004		X
FE-S	501	1999	2004		X
FC-E	550	2001	2005		X
FE-E	550	2004	2008		X
FE	570	2010	2012		X
FS	570	2010	→		X
FC	600	1999	2003		X
FE-E	600	1999	2002		X
FE-SUPERMOTARD	600	1999	2003		X
FE-E	650	2001	2008		X
FS-C	650	2001	2008		X
FS-E	650	2001	2008		X
FX-E	650	2001	2005		X
HUSQVARNA					
TC	125	2014	→		X
TE	125	2014	→		X
FC	250	2014	→		X
FE	250	2014	→		X
TC	250	2014	→		X
TE	250	2014	→		X
TE	300	2014	→		X
FC	350	2014	→		X
FE	350	2014	→		X
FC	450	2014	→		X
FE	450	2014	→		X
FE	501	2014	→		X
KTM					
EXC	125	1998	→		X
EXC-SIX-DAYS	125	2009	→		X
GS	125	1988	1992		X
GS	125	1993	1997		X
MX	125	1989	1992		X
STING	125	1998	→		X
SX	125	1993	→		X
SXS	125	2000	2010		X
SX	144	2007	2010		X
SX	150	2008	→		X
EXC	200	1998	→		X
EXC-SIX-DAYS	200	2015	→		X
MXC	200	1998	2003		X
SX	200	2003	2009		X
XC-W	200	2006	2009		X
EXC	250	1998	→		X
EXC-F	250	2004	→		X
EXC-F-SIX-DAYS	250	2009	→		X
EXC-G	250	2004	2009		X
EXC-SIX-DAYS	250	2009	→		X
GS	250	1988	1992		X
GS	250	1993	1997		X
MX	250	1989	1991		X
MX	250	1992	→		X

DK018					
MODELLO Model	CC	DA From	A To	ANT. Front	POST. Rear
MXC	250	1998	2003		X
SX	250	1993	1997		X
SX	250	1998	→		X
SX-F	250	2003	→		X
SXS	250	2003	2010		X
SXS-F	250	2006	2009		X
XC-F	250	2007	2012		X
XC-W	250	2006	2012		X
EXC	300	1997	→		X
EXC-SIX-DAYS	300	2009	→		X
GS	300	1991	1996		X
MX	300	1991	1992		X
MXC	300	1998	2005		X
SX	300	1997	2003		X
XC	300	2006	2012		X
XC-W	300	2006	2012		X
EXC-F	350	2010	→		X
EXC-F-SIX-DAYS	350	2011	→		X
GS	350	1993	→		X
SXF	350	2011	→		X
EXC	380	1998	2002		X
MXC	380	1998	2001		X
SX	380	1998	2002		X
EGS	400	1996	1999		X
EXC	400	1994	2011		X
SX	400	2000	2002		X
XC-W	400	2007	2009		X
EXC	450	2003	→		X
EXC-R	450	2008	2009		X
EXC-SIX-DAYS	450	2009	→		X
MXC	450	2003	2006		X
SMR	450	2004	2008		X
SXF	450	2003	→		X
SXS	450	2003	2010		X
SXS-F	450	2003	2010		X
XC	450	2006	2009		X
XC-F	450	2007	2009		X
XC-W	450	2007	2009		X
EXC	500	2010	→		X
EXC-SIX-DAYS	500	2011	→		X
MX	500	1989	1993		X
SX	500	1993	1995		X
SX-F	505	2007	2009		X
XC-F	505	2007	2009		X
EXC	520	2000	2002		X
MXC	520	2001	2002		X
SX-RACING	520	2000	2002		X
EXC	525	2003	2008		X
MXC	525	2003	2005		X
SMR	525	2004	2005		X
SX	525	2003	2006		X
SX-RACING	525	2005	2006		X
XC	525	2006	2008		X
XCG	525	2006	2008		X
XCW	525	2006	2008		X
EXC	530	2010	2011		X
EXC-R	530	2008	2009		X
EXC-SIX-DAYS	530	2009	→		X
SXC	540	1998	2000		X
SXS	540	2001	2006		X
SMR	560	2006	2008	X	

ACCOSSATO

dischi freno brake rotor

APPLICAZIONI PER CODICE DISCO / applications for rotor code

DK018					
MODELLO Model	CC	DA From	A To	ANT. Front	POST. Rear
GS-4T	600	1993	→		X
LC4	600	1990	1993		X
MX	600	1990	1992		X
ADVENTURE	620	1997	1998		X
DUKE-4T	620	1995	1997		X
DUKE-4T	620	1998	→		X
EGS-LC4	620	1996	2002		X
LC4-SC-SUPERCOMPETITION	620	1998	2004		X
LC4-SXC-SUPERMOTO	620	1999	2001		X
LC4-SC-SUPERCOMPETITION	625	2002	→		X

DK018					
MODELLO Model	CC	DA From	A To	ANT. Front	POST. Rear
LC4-SC-SUPERCOMPETITION	625	2003	2004		X
SMC	625	2005	2008		X
SXC	625	2003	2008		X
DUKE-II	640	1999	2002	X	
DUKE-II	640	2003	2006		X
LC4-ADVENTURE	640	1998	2007		X
LC4-ENDURO	640	1998	2007		X
LC4-SUPERMOTO	640	1998	2004		X
LC4-SUPERMOTO	640	2005	2005		X
LC4-SUPERMOTO	640	2006	→		X
SMC	660	2003	2007		X

DK

DK019

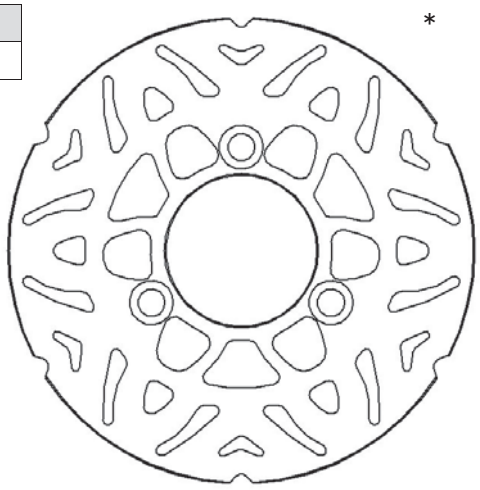

* **l'immagine del prodotto è puramente indicativa**
picture for illustrative purposes only

CODICE Reference	Ø ESTERNO Outer	Ø INTERNO Inner	SPESSORE Thickness	NR FORI No. holes	INTERASSE FORI Bolt patterns	Ø FORI Holes	CAMPANATURA Total height
DK019	180	58	4	3	80	10,6	0

CROSS REFERENCE		
ACCOSSATO	BREMBO	BRAKING
DK019	68B40714	ND

CODICE OEM	
HYSOUNG	/
KYMCO	157082
KYMCO	156977
MOTOR UNION	/
PEUGEOT	/

DK019					
MODELLO Model	CC	DA From	A To	ANT. Front	POST. Rear
HYSOUNG					
SUPER-CAB					
SUPER-CAB-PLUS					
KYMCO					
AGILITY-R10"					
AGILITY-R12					
DINK					
FEVER-ZX					
MAXXER					
SUPER-9					
SUPER-9-L.C.					
TOP-BOY					
VITALITY					
YUP					
YUP-SP					
YUP-SP					
AGILITY-R-12"					
B&W					
DINK					
DINK-CLASSIC					
DINK-LX					
DINK					
DINK-LX					
MAXXER					
DINK-CLASSIC					
MXU					
MOTOR UNION					
MAXI					
MAXI					
MIDI					
MAXI					
PEUGEOT					
SPEEDFIGHT-(AJP-CAL.)					
SPEEDFIGHT-(BREMBO-CAL.)					
X-RACE					
SPEEDFIGHT-(AJP-CAL.)					

dischi freno brake rotor

APPLICAZIONI PER CODICE DISCO / applications for rotor code

DK
DK020

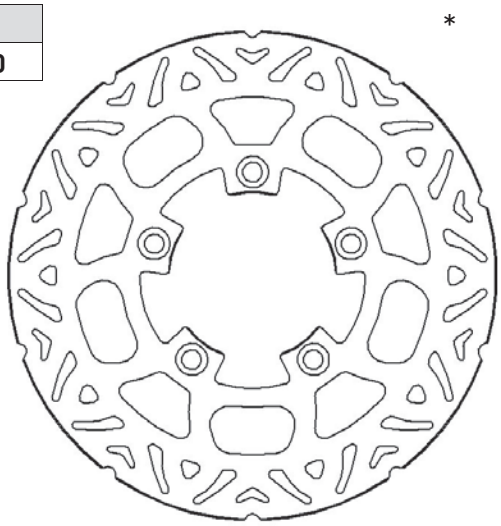

*

*** l'immagine del prodotto è puramente indicativa**
picture for illustrative purposes only

CODICE Reference	Ø ESTERNO Outer	Ø INTERNO Inner	SPESSORE Thickness	NR FORI No. holes	INTERASSE FORI Bolt patterns	Ø FORI Holes	CAMPANATURA Total height
DK020	260	88	4	5	110	10,5	0

CROSS REFERENCE		
ACCOSSATO	BREMBO	BRAKING
DK020	68B407B2	RF8117

CODICE OEM	
KYMCO	145010

DK020					
MODELLO Model	CC	DA From	A To	ANT. Front	POST. Rear
KYMCO					
AGILITY-R16	50	2008	→	X	
PEOPLE-S	50	2005	→	X	
AGILITY-16-PLUS	125	2014	→	X	
AGILITY-R-16	125	2008	2014	X	
PEOPLE-S	125	2005	2006	X	
PEOPLE-S	125	2007	→	X	X
AGILITY-R16	150	2008	2012	X	
AGILITY-16-PLUS	200	2014	→	X	
AGILITY-R16	200	2009	2014	X	
PEOPLE-S	200	2005	2006	X	
PEOPLE-S	200	2007	→	X	X
PEOPLE-S	250	2002	2005	X	X
PEOPLE-S	250	2006	2009	X	X
PEOPLE-S	300	2008	2010	X	X
PEOPLE-SI	300	2008	2010	X	X

DK
DK021

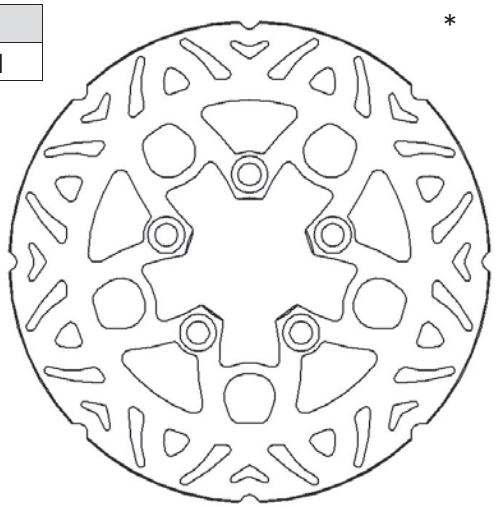

*

*** l'immagine del prodotto è puramente indicativa**
picture for illustrative purposes only

CODICE Reference	Ø ESTERNO Outer	Ø INTERNO Inner	SPESSORE Thickness	NR FORI No. holes	INTERASSE FORI Bolt patterns	Ø FORI Holes	CAMPANATURA Total height
DK021	220	58	4	5	80	10,5	0

CROSS REFERENCE		
ACCOSSATO	BREMBO	BRAKING
DK021	68B40731	ND

CODICE OEM	
KYMCO	156909

DK021					
MODELLO Model	CC	DA From	A To	ANT. Front	POST. Rear
KYMCO					
B&W	50	2003	2006	X	
DINK-CLASSIC	50	2003	2007	X	
DINK-SPORTS	50	2002	2006	X	
B&W	125	2000	→	X	
DINK-CLASSIC	125	2002	→	X	
GRAND-DINK	125	2002	2007	X	
MOVIE-XL	125	1999	2009	X	
B&W	150	2000	→	X	
DINK-CLASSIC	150	2002	2003	X	
GRAND-DINK	150	2002	2007	X	
MOVIE-XL	150	2001	→	X	
DINK-CLASSIC	200	2003	→	X	
B&W	250	2000	2006	X	
GRAND-DINK	250	2000	2006	X	
YUP	250	2003	→	X	

ACCOSSATO

dischi freno brake rotor

APPLICAZIONI PER CODICE DISCO / applications for rotor code

DK
DK022

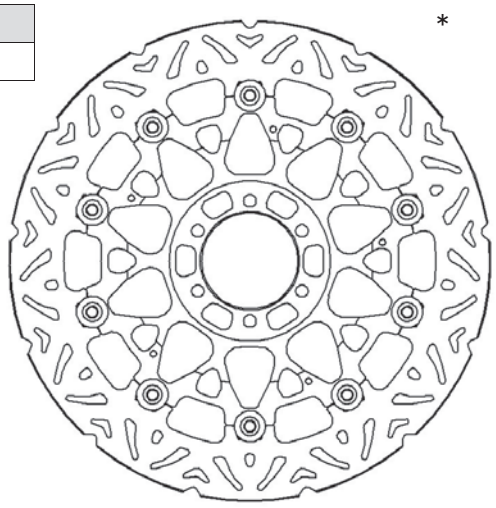

* **l'immagine del prodotto è puramente indicativa**
picture for illustrative purposes only

COLORI FASCIA FRENANTE / braking strip colours		
NERO	black	N
ORO	gold	Y
ROSSO	red	R

CODICE Reference	Ø ESTERNO Outer	Ø INTERNO Inner	SPESSORE Thickness	NR FORI No. holes	INTERASSE FORI Bolt patterns	Ø FORI Holes	CAMPANATURA Total height
DK022	320	64	5	6	80	8,5	10

CROSS REFERENCE		
ACCOSSATO	BREMBO	BRAKING
DK022	78B40870	STX01

CODICE OEM	
APRILIA	896011
APRILIA	893135
APRILIA	856774
APRILIA	AP8113926
BENELLI	R180271101000
BENELLI	R320171101000
BIMOTA	/
BMW	/
CAGIVA	8000A8064
CAGIVA	800062587
DUCATI	49240241A
GILERA	/
KTM	/
LAVERDA	/
MONDIAL	/
MOTO GUZZI	/
MOTO MORINI	M12000001400
VOXAN	/
YAMAHA	4KG2581T1000

DK022					
MODELLO Model	CC	DA From	A To	ANT. Front	POST. Rear
APRILIA					
AF-1 FUTURA	125	1990	1992	X	
MX	125	2004	2007	X	
RS EXTREMA	125	1989	1991	X	
RS EXTREMA	125	1992	1997	X	
RS REPLICA	125	1992	1997	X	
SPORT PRODUCTION	125	1992	→	X	
TUONO	125	2004	2005	X	
PEGASO FACTORY	650	2007	2009	X	
PEGASO STRADA	650	2005	2009	X	
DORSODURO	750	2008	→	X	
DORSODURO ABS	750	2008	→	X	
DORSODURO FACTORY	750	2010	→	X	
SHIVER	750	2007	→	X	

DK022					
MODELLO Model	CC	DA From	A To	ANT. Front	POST. Rear
SHIVER-GT-ABS	750	2009	→	X	
SHIVER-SL	750	2007	2009	X	
MANA	850	2007	2011	X	
MANA-GT	850	2009	2013	X	
RSV	1000	1998	2000	X	
RSV	1000	2001	2003	X	
RSV-FACTORY	1000	2003	2007	X	
RSV-R	1000	2000	2008	X	
RSV-SP	1000	1999	2000	X	
RSV4-FACTORY	1000	2009	2011	X	
RSV4-FACTORY-APRC	1000	2011	2012	X	
RSV4-FACTORY-APRC-ABS	1000	2013	→	X	
RSV4-R	1000	2010	2010	X	
RSV4-RF	1000	2015	→	X	
RSV4-RR	1000	2015	→	X	
SL-FALCO	1000	2000	2004	X	
TUONO	1000	2003	→	X	
TUONO-FIGHTER	1000	2002	2005	X	
TUONO-R	1000	2003	2009	X	
TUONO-RACING	1000	2004	2005	X	
TUONO-V4-FACTORY	1000	2015	→	X	
TUONO-V4-FACTORY-RR	1000	2015	→	X	
TUONO-V4R	1000	2011	→	X	
TUONO-V4R-APRC	1000	2011	→	X	
TUONO-V4R-APRC-ABS	1000	2014	→	X	
CAPONORD	1200	2013	→	X	
CAPONORD-ABS	1200	2013	→	X	
CAPONORD-RALLY	1200	2015	→	X	
DORSODURO	1200	2011	→	X	
DORSODURO-ABS	1200	2011	→	X	
BENELLI					
BN-302	300	2014	→	X	
BN	600	2014	→	X	
BN-GT	600	2014	→	X	
TNT-CENTURY-RACER	899	2011	→	X	
TRE-899-K	899	2011	→	X	
TORNADO-3-BIPOSTO	900	2002	2003	X	
TORNADO-3-L.E.	900	2003	2006	X	
TORNADO-3-RS	900	2004	2006	X	
TNT	1130	2004	→	X	
TNT	1130	2005	2006	X	
TNT-CAFE'-RACER	1130	2005	2007	X	
TNT-CENTURY-RACER	1130	2011	→	X	
TNT-R-160	1130	2011	→	X	
TNT-RS	1130	2005	2006	X	
TNT-SPORT	1130	2005	→	X	
TNT-TITANIUM	1130	2005	2007	X	
TORNADO-TRE	1130	2006	→	X	
TORNADO-TRE-R	1130	2013	→	X	
TRE-K	1130	2006	2007	X	
TRE-K	1130	2011	→	X	
TRE-K-AMAZONAS	1130	2013	→	X	
BIMOTA					
YB-7	400	1989	→	X	
V-DUE	500	1997	2000	X	
BB1-SUPERMONO	650	1996	2000	X	
TESI	851	1990	1991	X	
DB2-SR	904	1993	2000	X	
DB3-MANTRA	904	1995	2000	X	
DB4	904	1998	1999	X	
DB5	1000	2005	→	X	

dischi freno brake rotor

APPLICAZIONI PER CODICE DISCO / applications for rotor code

DK022					
MODELLO Model	CC	DA From	A To	ANT. Front	POST. Rear
DB6-R-DELIRIO	1000	2006	→	X	
DIECI-BIPOSTO	1000	1992	1995	X	
SB8-K-GOBERT	1000	2004	2006	X	
SB8-R	1000	1997	2000	X	
SB6	1100	1996	2000	X	
SB6R	1100	1998	2000	X	
SB8K-SANTAMONICA	1100	2004	→	X	
BMW					
G-650-XMOTO	650	2007	2009	X	
CAGIVA					
MITO	125	1990	1990	X	
MITO	125	1991	1994	X	
MITO-2	125	1992	→	X	
MITO-525	125	2006	2010	X	
MITO-EV	125	1995	2007	X	
PLANET	125	1997	2003	X	
PLANET	125	2004	2007	X	
RAPTOR	125	2004	2006	X	
SUPER-CITY	125	1992	2000	X	
RIVER	500	1999	2001	X	
RIVER	600	1995	1999	X	
DUCATI					
350-SUPERSPORT	350	1991	1992	X	
400-SUPERSPORT	400	1993	1997	X	
MONSTER-400	400	1995	1997	X	
MONSTER-400-DARK	400	2003	→	X	
MONSTSER-400	400	2001	2006	X	
600-SUPERSPORT	600	1991	2000	X	
MONSTER-600	600	1993	2002	X	
MONSTER-600	600	1998	→	X	
MONSTER-600-DARK	600	1998	→	X	
MONSTER-600-DARK	600	2000	2001	X	
MONSTER-600-DARK-CITY	600	1999	→	X	
MONSTER-600-DARK-CITY	600	2000	2001	X	
MONSTER-600-METALLIC	600	2000	2001	X	
MONSTER-620-DARK-(MONODISCO)	620	2004	2005	X	
MONSTER-620-S-I.E.	620	2002	2004	X	
MULTISTRADA-620-SD	620	2004	2006	X	
SPORT	620	2003	2004	X	
SUPERSPORT	620	2002	2005	X	
MONSTER-696	696	2008	2012	X	
MONSTER-696-ABS	696	2008	2012	X	
748	748	2000	2002	X	
748-BIPOSTO	748	1995	1998	X	
748-BIPOSTO	748	1999	2002	X	
748-R	748	2000	2000	X	
748-S	748	1999	2002	X	
748-SP	748	1995	1997	X	
748-SPS	748	1998	1999	X	
750-SPORT	750	2001	2002	X	
750-SUPERSPORT	750	1991	1999	X	
750-SUPERSPORT-I.E.	750	2000	2002	X	
MONSTER-750-DARK-I.E.	750	2002	→	X	
MONSTER-750	750	1994	2001	X	
MONSTER-750	750	2000	2001	X	
MONSTER-750-(BIDISCO)	750	1996	1997	X	
MONSTER-750-(MONODISCO)	750	1996	1997	X	
MONSTER-750-DARK	750	2000	2001	X	
MONSTER-750-METALLIC	750	2000	2001	X	
800-SPORT	803	2003	2004	X	

DK022					
MODELLO Model	CC	DA From	A To	ANT. Front	POST. Rear
MONSTER-800-S-I.E.	803	2003	2004	X	
SUPERSPORT-800	803	2006	→	X	
SUPERSPORT-800-S	803	2003	2004	X	
851	851	1989	1991	X	
851-SP5	851	1993	→	X	
851-SP2	851	1990	→	X	
851-SP3	851	1991	→	X	
851-SP4	851	1992	→	X	
888-SP	888	1990	1993	X	
888-SUPERBIKE-STRADA	888	1994	1995	X	
900-SUPERSPORT	900	1989	1990	X	
900-SUPERSPORT	900	1991	1999	X	
900-SUPERSPORT-I.E.	900	2000	2002	X	
900-SUPERSPORT-S-I.E.	900	2002	→	X	
MH-900-EVOLUTION	900	2001	2002	X	
MONSTER-900	900	1993	1999	X	
MONSTER-900-CROMO	900	1998	→	X	
MONSTER-900-CROMO-I.E.	900	2000	2001	X	
MONSTER-900-DARK-CITY	900	1999	→	X	
MONSTER-900-DARK-I.E.	900	2000	2002	X	
MONSTER-900-I.E.	900	2000	→	X	
MONSTER-900-METALLIC-I.E.	900	2000	2001	X	
MONSTER-900-S-I.E.	900	2000	2001	X	
MONSTER-900-SPECIAL	900	1998	→	X	
SPORT	900	2002	→	X	
SUPERLIGHT-900	900	1992	1992	X	
SUPERLIGHT-900	900	1993	1997	X	
907-I.E.	907	1992	1993	X	
916	916	1994	1996	X	
916-BIPOSTO-SENNA	916	1994	1998	X	
916-RACING	916	1994	1997	X	
916-S	916	1994	1996	X	
916-SP	916	1994	1996	X	
916-SPS	916	1997	1998	X	
MONSTER-S4	916	2001	2003	X	
MONSTER-S4-FOGGY	916	2002	→	X	
ST4	916	1998	2004	X	
ST4-S	916	2003	→	X	
ST2	944	1997	2003	X	
996	996	1999	2001	X	
996-R	996	2001	→	X	
996-S	996	1999	2001	X	
996-SPS	996	1999	2001	X	
996-SPS-II	996	1999	2001	X	
996-SPS-III	996	1999	2001	X	
ST4-S	996	2001	2005	X	
998	998	2002	→	X	
998-F.E.	998	2002	→	X	
998-MATRIX	998	2002	→	X	
998-S	998	2002	→	X	
1000SS-S	1000	2003	→	X	
1100SS	1000	2003	2006	X	
GT-1000-TOURING	1000	2006	2010	X	
MONSTER-1000-S-I.E.	1000	2003	2005	X	
MONSTER-S2-R-1000	1000	2006	2007	X	
MONSTER-S4-1000-R	1000	2003	2004	X	
MONSTER-S4-1000-R-(MONOBRACCIO)	1000	2005	2006	X	
PAUL-SMART-I.E.	1000	2006	2007	X	
SPORT	1000	2006	2008	X	
SPORT-S	1000	2007	→	X	

ACCOSSATO

dischi freno brake rotor

APPLICAZIONI PER CODICE DISCO / applications for rotor code

DK022					
MODELLO Model	CC	DA From	A To	ANT. Front	POST. Rear
ST3	1000	2004	2006	X	
ST3-S-ABS	1000	2006	2007	X	
GILERA					
GFR	125	1993	→	X	
KTM					
DUKE-II	640	2003	2006	X	
LC4-SUPERMOTO	640	2005	2005	X	
DUKE	690	2008	2013	X	
DUKE-ABS	690	2012	2012	X	
DUKE-R	690	2014	→	X	
SM	690	2007	→	X	
SM-PRESTIGE	690	2008	2009	X	
SM-R	690	2008	→	X	
SUPER-DUKE	990	2005	2011	X	
SUPERDUKE-R	990	2007	2011	X	
RC8	1190	2008	2009	X	
LAVERDA					
GHOST	650	1996	1999	X	
SPORT	650	1995	2001	X	
DIAMANTE	668	1996	1998	X	
STRIKE	668	1997	1999	X	
BLACK-STRIKE	750	2000	→	X	
FORMULA	750	1997	1998	X	
SPORT	750	1997	1998	X	
STRIKE	750	1998	2001	X	
T-8	800	1998	→	X	
TSS	800	1998	→	X	
MONDIAL					
PIEGA	999	2003	→	X	
PIEGA-EVO	999	2003	→	X	
PIEGA-NUDA	999	2004	→	X	
MOTO GUZZI					
BREVA-750-I.E.	750	2003	2007	X	
NEVADA	750	2003	2007	X	
NEVADA-AQUILA-NERA	750	2010	→	X	
NEVADA-CLASSIC-I.E.	750	2003	→	X	
NEVADA-CLUB	750	2003	→	X	
V7-CAFE'-CLASSIC	750	2010	→	X	
V7-CLASSIC	750	2009	→	X	
V7-II-CAFE'-RACER	750	2015	→	X	
V7-II-RACER	750	2015	→	X	
V7-II-SPECIAL	750	2015	→	X	
V7-II-STONE	750	2015	→	X	
V7-RACER	750	2010	→	X	
V7-SPECIAL	750	2012	→	X	
V7-STONE	750	2012	→	X	
BREVA	850	2006	2008	X	
GRISO	850	2006	→	X	
NORGE-T-GTL	850	2007	→	X	
NORGE-T-GTL-ABS	850	2007	→	X	
BELLAGIO	940	2010	→	X	
CALIFORNIA-AQUILA-NERA	1000	2010	→	X	
CALIFORNIA-STONE	1000	2001	2006	X	
DAYTONA-RACING	1000	1996	→	X	
DAYTONA-RS	1000	1996	→	X	
V10-CENTAURO	1000	1997	1999	X	
V10-CENTAURO-GT	1000	1999	2001	X	
V10-CENTAURO-SPORT	1000	1998	2000	X	
BREVA	1100	2005	2007	X	
BREVA-ABS	1100	2005	2007	X	
CALIFORNIA-ALUMINIUM	1100	2003	→	X	

DK022					
MODELLO Model	CC	DA From	A To	ANT. Front	POST. Rear
CALIFORNIA-EV	1100	1996	2000	X	
CALIFORNIA-EV-SPECIAL	1100	1997	2003	X	
CALIFORNIA-EV-TOURING	1100	2003	→	X	
CALIFORNIA-JACKAL	1100	2001	2006	X	
CALIFORNIA-TITANIUM	1100	2003	→	X	
GRISO	1100	2005	2008	X	
METAL	1100	2002	→	X	
SPORT	1100	1994	1996	X	
SPORT	1100	1998	1999	X	
SPORT	1100	2000	→	X	
SPORT-CORSA	1100	1998	1999	X	
SPORT-I.E.	1100	1996	1999	X	
V11	1100	2000	→	X	
V11-CAFE'-SPORT	1100	2003	→	X	
V11-LE-MANS-NERO-CORSA	1100	2003	→	X	
V11-LE-MANS-ROSSO-CORSA	1100	2003	→	X	
V11-BALLABIO	1100	2003	→	X	
V11-COPPA-ITALIA	1100	2003	→	X	
V11-LE-MANS	1100	2001	2005	X	
V11-NAKED	1100	2001	2002	X	
V11-SPORT	1100	2001	2002	X	
BREVA	1200	2008	2009	X	
BREVA-ABS	1200	2008	2009	X	
GRISO-8V	1200	2007	→	X	
NORGE-ABS	1200	2006	→	X	
NORGE-GT-8V	1200	2008	→	X	
NORGE-T-GTL	1200	2006	2009	X	
SPORT	1200	2006	2007	X	
SPORT-8V	1200	2009	→	X	
SPORT-ABS	1200	2006	2007	X	
STELVIO	1200	2008	→	X	
MOTO MORINI					
9-1/2	1200	2006	2009	X	
CORSARO	1200	2005	2009	X	
CORSARO-AVIO	1200	2008	2009	X	
CORSARO-VELOCE	1200	2007	2009	X	
SPORT	1200	2008	2010	X	
VOXAN					
BLACK-MAGIC	1000	2006	→	X	
CAFE'-RACER	1000	1999	2006	X	
ROADSTER	1000	2000	2006	X	
YAMAHA					
TDR-R	125	1993	→	X	
TZR-R	125	1991	→	X	
FZX-ZEAL	250	1991	→	X	
TDR	250	1989	1992	X	
TZR	250	1989	1989	X	
TZR	250	1990	1992	X	
SZR	660	1995	→	X	
FZR	750	1989	1992	X	
FZR-GENESIS	750	1987	→	X	
YZF-R	750	1993	1997	X	
YZF-SP	750	1993	1997	X	
FZR-EX-UP	1000	1989	1990	X	
FZR-EX-UP	1000	1991	1991	X	
FZR-EX-UP	1000	1992	1993	X	
FZR-EX-UP	1000	1994	1995	X	
FZR-GENESIS	1000	1987	1988	X	
XJR	1200	1995	1998	X	
XJR-(BREMBO-CALIPER)	1300	1998	→	X	

dischi freno brake rotor

APPLICAZIONI PER CODICE DISCO / applications for rotor code

DK
DK023

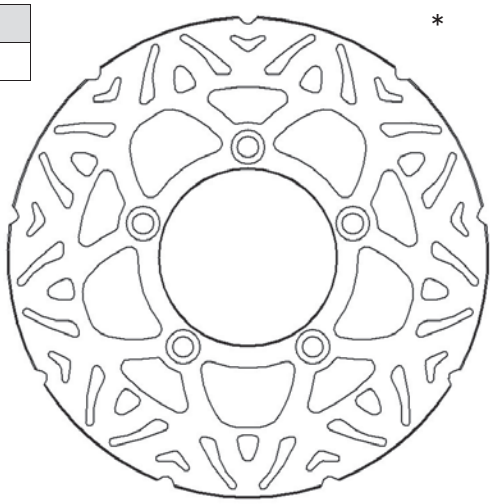

* l'immagine del prodotto è puramente indicativa
picture for illustrative purposes only

CODICE Reference	Ø ESTERNO Outer	Ø INTERNO Inner	SPESSORE Thickness	NR FORI No. holes	INTERASSE FORI Bolt patterns	Ø FORI Holes	CAMPANATURA Total height
DK023	240	88	4	5	110	10,5	0

CROSS REFERENCE		
ACCOSSATO	BREMBO	BRAKING
DK023	68B40795	SZ08RI

CODICE OEM	
KYMCO	143068
KYMCO	143057

DK023					
MODELLO Model	CC	DA From	A To	ANT. Front	POST. Rear
KYMCO					
AGILITY-16-PLUS	125	2014	→		X
AGILITY-R-16	125	2008	2014		X
DOWNTOWN	125	2009	2014		X
AGILITY-R16	150	2008	2012		X
AGILITY-16-PLUS	200	2014	→		X
AGILITY-R16	200	2009	2014		X
DOWNTOWN-I	200	2010	2014		X
NEW-DINK	200	2008	→	X	
G-DINK	300	2012	→	X	
SUPER-DINK	300	2009	2012		X

DK
DK024

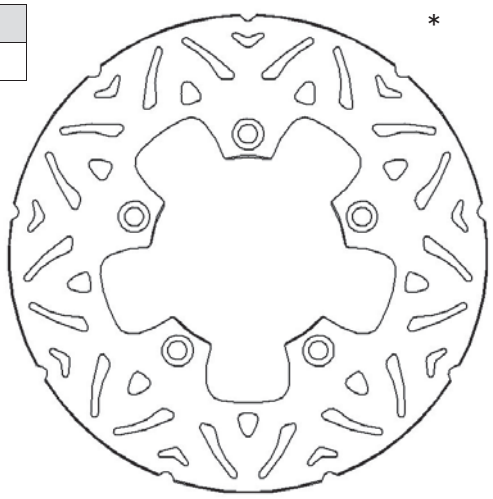

* l'immagine del prodotto è puramente indicativa
picture for illustrative purposes only

CODICE Reference	Ø ESTERNO Outer	Ø INTERNO Inner	SPESSORE Thickness	NR FORI No. holes	INTERASSE FORI Bolt patterns	Ø FORI Holes	CAMPANATURA Total height
DK024	260	105	5	5	130	10,6	0

CROSS REFERENCE		
ACCOSSATO	BREMBO	BRAKING
DK024	68B407E1	KM05FI

CODICE OEM	
KYMCO	156231

DK024					
MODELLO Model	CC	DA From	A To	ANT. Front	POST. Rear
KYMCO					
XCITING	250	2005	2008	X	
XCITING	300	2008	2011	X	
XCITING-R	300	2008	2011	X	
XCITING-RI	300	2008	2009	X	
XCITING	500	2004	2009	X	
XCITING-R	500	2007	2011	X	

ACCOSSATO

dischi freno brake rotor

APPLICAZIONI PER CODICE DISCO / applications for rotor code

DK
DK025

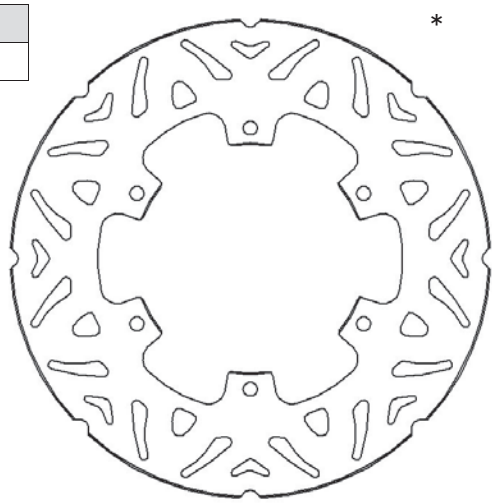

* l'immagine del prodotto è puramente indicativa
picture for illustrative purposes only

CODICE Reference	Ø ESTERNO Outer	Ø INTERNO Inner	SPESSORE Thickness	NR FORI No. holes	INTERASSE FORI Bolt patterns	Ø FORI Holes	CAMPANATURA Total height
DK025	220	105	4	6	120	6,5	0

CROSS REFERENCE		
ACCOSSATO	BREMBO	BRAKING
DK025	68B40738	RF8119

CODICE OEM	
BETA	/
GILERA	561714
PIAGGIO	56484R

DK025					
MODELLO Model	CC	DA From	A To	ANT. Front	POST. Rear
BETA					
TEMPO-"16"	50	2000	→	X	
GILERA					
RUNNER-VX-4T-(GRIMECA CALIPER)	125	1999	2004		X
RUNNER-VX-4T-(HENGTONG CALIPER)	125	2005	2007		X
RUNNER-SP	200	2001	2002		X
RUNNER-VXR	200	2005	2008		X
PIAGGIO					
LIBERTY	50	1997	2011	X	
LIBERTY-2T	50	2006	2008	X	
LIBERTY-2T-RST	50	2004	→	X	
LIBERTY-2T-SPORT	50	2006	2008	X	
LIBERTY-4T	50	2000	2009	X	
LIBERTY-4T-DELIVERY-TNT	50	2009	→	X	
LIBERTY-4T-RST	50	2004	→	X	
LIBERTY-4T-SPORT	50	2006	2008	X	
LIBERTY-PTT-EURO2	50	2004	2005	X	
NRG-POWER-DD	50	2005	2011	X	
NRG-POWER-DD-SERIE-SPECIALE	50	2007	→	X	
NRG-POWER-DT	50	2006	2011	X	

DK025					
MODELLO Model	CC	DA From	A To	ANT. Front	POST. Rear
NRG-POWER-PUREJET	50	2004	→	X	
NRG-PUREJET	50	2005	2010	X	
FREE	100	2002	2003	X	
FLY-4T-3V-EURO-3	125	2013	→		X
GTS-SUPER-IE	125	2015	→	X	X
LIBERTY	125	1998	2002	X	
LIBERTY-4T	125	2006	2007	X	
LIBERTY-4T-DELIVERY-EURO3	125	2008	→	X	
LIBERTY-4T-EURO3	125	2007	2008	X	
LIBERTY-4T-SPORT-EURO3	125	2006	2008	X	
LIBERTY-RST	125	2004	2005	X	
LIBERTY-RST-PTT	125	2005	2006	X	
LIBERTY-S	125	2006	→	X	
VESPA-GRANTURISMO	125	2003	2007	X	X
VESPA-GRANTURISMO-EURO3	125	2006	2007	X	X
VESPA-GT-L	125	2004	→	X	X
VESPA-GTS-4T-IE-SUPER	125	2009	→	X	X
VESPA-GTS-EURO3	125	2007	2011	X	X
VESPA-GTV	125	2007	2008	X	X
VESPA-GTV-4T-NAVY-EURO3	125	2008	→	X	X
ZIP-4T	125	2002	→	X	
LIBERTY	150	2000	→	X	
LIBERTY-4T-EURO3	150	2008	→	X	
LIBERTY-4T-SPORT	150	2008	→	X	
SUPERHEXAGON	150	1999	→	X	X
SUPER-HEXAGON-GTX-12"	180	2001	2003		X
LIBERTY	200	2006	→	X	
LIBERTY-4T-EURO3	200	2007	2008	X	
LIBERTY-4T-SPORT-EURO3	200	2006	2007	X	
LIBERTY-RST	200	2004	→	X	
LIBERTY-S	200	2001	→	X	
LIBERTY-SPORT	200	2006	→	X	
VESPA-GRANTURISMO	200	2006	2007	X	X
VESPA-GT-L	200	2004	2006	X	X
HEXAGON	250	1998	2001		X
SUPERHEXAGON	250	1999	2001	X	X
VESPA-GT-60-EURO	250	2006	2007	X	X
VESPA-GTS	250	2005	2012	X	X
VESPA-GTS-ABS	250	2005	2012	X	X
VESPA-GTV	250	2006	2009	X	X
VESPA-GTV-4T-NAVY-EURO3	250	2008	→	X	X
VESPA-GTS-IE	300	2012	→	X	X
VESPA-GTS-SUPER	300	2008	2013	X	X
VESPA-GTS-SUPER-SPORT	300	2010	→	X	X
VESPA-GTS-TOURING	300	2011	2012	X	X
VESPA-GTS-TOURING	300	2015	→	X	X
VESPA-GTS-TOURING-IE-ABS	300	2015	→	X	X
VESPA-GTV-VIA-MONTENAPOLEONE	300	2010	→	X	X

dischi freno brake rotor

ACCOSSATO

APPLICAZIONI PER CODICE DISCO / applications for rotor code

DK
DK026

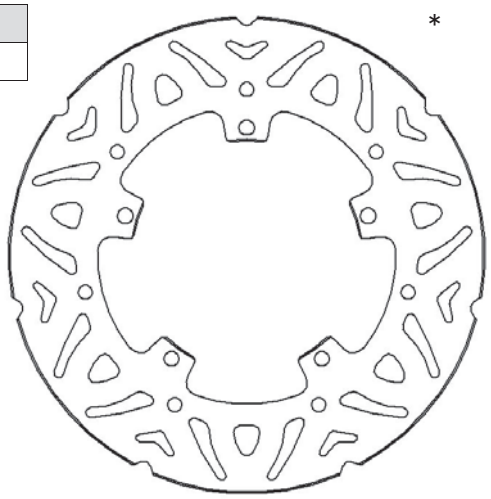

*

*** l'immagine del prodotto è puramente indicativa**
picture for illustrative purposes only

CODICE Reference	Ø ESTERNO Outer	Ø INTERNO Inner	SPESSORE Thickness	NR FORI No. holes	INTERASSE FORI Bolt patterns	Ø FORI Holes	CAMPANATURA Total height
DK026	200	96	4	5	107	6,5	0

CROSS REFERENCE		
ACCOSSATO	BREMBO	BRAKING
DK026	68B40722	PI01FI

CODICE OEM	
GILERA	563246
LEM	/
LML	C-3721415
PIAGGIO	56395R

DK026					
MODELLO Model	CC	DA From	A To	ANT. Front	POST. Rear
GILERA					
ICE	50	1999	→	X	
LEM					
STAR-DE-LUXE	150	2009	→	X	
LML					
STAR-2T	125	2010	→	X	
STAR-4T	125	2010	→	X	
STAR-DELUXE	125	2009	→	X	
STAR-2T	150	2010	→	X	
STAR-4T	150	2010	→	X	
STAR-DE-LUXE	150	2009	→	X	
STAR-4T	151	2010	→	X	
STAR-4T	200	2010	→	X	
PIAGGIO					
FLY-2T	50	2005	2007	X	
FLY-2T	50	2010	2011	X	
FLY-4T	50	2008	2011	X	
FREE-FL	50	1995	2002	X	
SFERA-RST	50	1996	1998	X	
VESPA-ET2	50	1997	2005	X	
VESPA-ET4	50	1997	2005	X	
VESPA-LX-2T	50	2005	2013	X	
VESPA-LX-2T-FL	50	2009	2010	X	
VESPA-LX-2T-TOURING	50	2010	2013	X	

DK026					
MODELLO Model	CC	DA From	A To	ANT. Front	POST. Rear
VESPA-LX-4T	50	2005	2008	X	
VESPA-LX-4T-4V	50	2009	2013	X	
VESPA-LX-4T-4V-TOURING	50	2010	2013	X	
VESPA-LXV-2T	50	2006	2009	X	
VESPA-LXV-2T-NAVY	50	2008	2008	X	
VESPA-PRIMAVERA	50	2013	→	X	
VESPA-PRIMAVERA-4T-4V	50	2013	→	X	
VESPA-S-2T	50	2007	2012	X	
VESPA-S-4T&COLLEGE	50	2008	2012	X	
VESPA-S-4T-4V	50	2008	2009	X	
VESPA-S-COLLEGE-4T	50	2007	2010	X	
VESPA-SPRINT-2T-2V	50	2014	→	X	
VESPA-SPRINT-4T-4V	50	2014	→	X	
ZIP-SP	50	1996	2008	X	
ZIP-SP-EURO2	50	2006	2013	X	
ZIP-SPORT-H2O-SP	50	1996	→	X	
SFERA	75	1996	1997	X	
FLY-4T	100	2006	2008	X	
FLY	125	2005	2007	X	
FLY-EURO3	125	2008	2011	X	
HEXAGON-GTX	125	2000	→	X	X
HEXAGON-LX	125	1998	1999	X	
SFERA	125	1996	1998	X	
VESPA-ET4	125	1996	2002	X	
VESPA-LX	125	2004	2011	X	
VESPA-LX-4T-FL	125	2009	2009	X	
VESPA-LX-EURO-3	125	2006	2008	X	
VESPA-LX-EURO3-IE	125	2009	2011	X	
VESPA-LX-TOURING	125	2010	2013	X	
VESPA-LXV-4T-NAVY-EURO3	125	2007	2008	X	
VESPA-LXV-IE-4T	125	2010	2013	X	
VESPA-PRIMAVERA-4T	125	2013	→	X	
VESPA-PX	125	1998	2011	X	
VESPA-PX-30-ANNI	125	2007	2008	X	
VESPA-S-4T-EURO3	125	2007	2008	X	
VESPA-S-4T-IE	125	2012	→	X	
VESPA-S-4T-IE&COLLEGE	125	2009	2011	X	
VESPA-SPRINT-4T-IE	125	2014	→	X	
FLY	150	2005	2007	X	
FLY-EURO3	150	2008	2011	X	
HEXAGON	150	1998	→	X	
VESPA-ET4	150	1999	2005	X	
VESPA-LX	150	2005	2006	X	
VESPA-LX-4T-FL	150	2009	→	X	
VESPA-LX-EURO3	150	2006	2008	X	
VESPA-LX-EURO3-IE	150	2009	2011	X	
VESPA-LX-TOURING	150	2010	2013	X	
VESPA-PRIMAVERA	150	2014	→	X	
VESPA-PX	150	2002	2012	X	
VESPA-S-4T	150	2008	2009	X	
VESPA-S-4T-IE&COLLEGE	150	2009	2012	X	
HEXAGON-LXT	180	1999	2000	X	
SUPERHEXAGON	180	1999	2000	X	X
VESPA-PX	200	1996	2007	X	
VESPA-PX-E	200	1996	2007	X	
VESPA-PX-TIME	200	2001	2007	X	
HEXAGON	250	1998	2001	X	X

ACCOSSATO

dischi freno brake rotor

APPLICAZIONI PER CODICE DISCO / applications for rotor code

DK
DK027

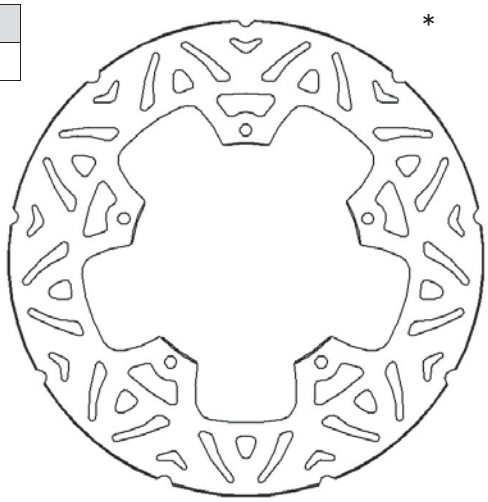

*

*** l'immagine del prodotto è puramente indicativa**
picture for illustrative purposes only

CODICE Reference	Ø ESTERNO Outer	Ø INTERNO Inner	SPESSORE Thickness	NR FORI No. holes	INTERASSE FORI Bolt patterns	Ø FORI Holes	CAMPANATURA Total height
DK027	260	125	5	5	140	6,5	0

CROSS REFERENCE		
ACCOSSATO	BREMBO	BRAKING
DK027	68B407B7	PI04FI

CODICE OEM	
PIAGGIO	56397R

DK027					
MODELLO Model	CC	DA From	A To	ANT. Front	POST. Rear
PIAGGIO					
BEVERLY	125	2001	2006	X	X
BEVERLY-EURO3	125	2007	2008	X	X
BEVERLY-EURO3-MIC	125	2007	→	X	X
BEVERLY-EURO3-SPORT	125	2007	2008	X	X
BEVERLY-RST	125	2004	2007	X	X
BEVERLY-TOURER-EURO3	125	2008	2010	X	X
CARNABY	125	2007	2010	X	X
BEVERLY	250	2006	2007	X	X
BEVERLY-CRUISER	250	2007	2009	X	X
BEVERLY-EURO3-MIC	250	2007	→	X	X
BEVERLY-IE-EURO3	250	2006	2008	X	X
BEVERLY-RST	250	2004	2005	X	X
BEVERLY-SPORT	250	2006	2008	X	X
BEVERLY-TOURER-EURO3	250	2008	2009	X	X
CARNABY	250	2008	2009	X	X
BEVERLY-TOURER-EURO3	300	2009	→	X	X
BEVERLY	500	2002	2006	X	
BEVERLY-EURO3	500	2006	2009	X	
X9	500	2001	2002	X	

DK029
DK029

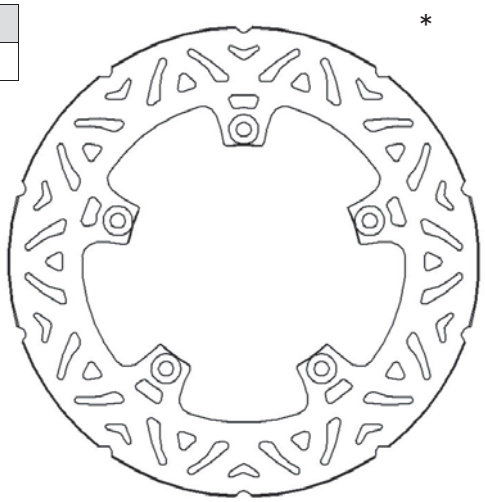

*

*** l'immagine del prodotto è puramente indicativa**
picture for illustrative purposes only

CODICE Reference	Ø ESTERNO Outer	Ø INTERNO Inner	SPESSORE Thickness	NR FORI No. holes	INTERASSE FORI Bolt patterns	Ø FORI Holes	CAMPANATURA Total height
DK029	267	132	5	5	150	8,5	0

CROSS REFERENCE		
ACCOSSATO	BREMBO	BRAKING
DK029	68B407C2	ND

CODICE OEM	
YAMAHA	1B9F582U0000

DK029					
MODELLO Model	CC	DA From	A To	ANT. Front	POST. Rear
YAMAHA					
X-MAX	125	2005	2013	X	
X-MAX	125	2014	→	X	
X-MAX-ABS	125	2013	→	X	
X-MAX	250	2005	2013	X	
X-MAX	250	2014	→	X	
X-MAX-ABS	250	2013	→	X	
X-MAX-SPORT	250	2011	2013	X	
X-MAX-SPORT	250	2014	→	X	
FZ-8	800	2010	2013		X
FZS-FAZER	800	2010	2012		X

dischi freno brake rotor

APPLICAZIONI PER CODICE DISCO / applications for rotor code

ACCOSSATO

DK
DK030

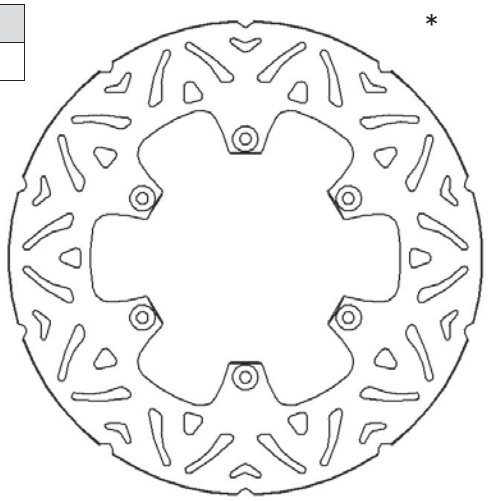

* l'immagine del prodotto è puramente indicativa
picture for illustrative purposes only

CODICE Reference	Ø ESTERNO Outer	Ø INTERNO Inner	SPESSORE Thickness	NR FORI No. holes	INTERASSE FORI Bolt patterns	Ø FORI Holes	CAMPANATURA Total height
DK030	267	118	4	6	134	6,5	0

CROSS REFERENCE			CODICE OEM	
ACCOSSATO	BREMBO	BRAKING	YAMAHA	4GVF582T0000
DK030	68B407C1	ND		

DK030					
MODELLO Model	CC	DA From	A To	ANT. Front	POST. Rear
YAMAHA					
TT-E	600	1997	2000	X	
TT-R	600	1998	2000	X	
TT-RE	600	2004	2007	X	

DK031	220	115	5	6	133	6,5	0

CROSS REFERENCE			CODICE OEM	
ACCOSSATO	BREMBO	BRAKING	HRD	/
DK031	68B40756	YA01RI	TM	/
			YAMAHA	4GVF582W0000
			YAMAHA	5DH2582W0000

DK024					
MODELLO Model	CC	DA From	A To	ANT. Front	POST. Rear
HRD					
GS	125	1994	1996		X
GS	125	1997	→		X
MC	125	1994	1996		X
GS	250	1994	1996		X
MC	250	1994	1996		X
TM					
GS	125	1990	1992		X
MC	125	1990	1992		X
YAMAHA					
DT-R	125	1992	2003		X
TDR	125	1989	1999		X
WR	125	1989	1989		X
WR	125	1990	1997		X
YZ	125	1985	1989		X
YZ	125	1990	1997		X
WR	200	1992	1995		X
TT	250	2000	→		X
WR	250	1990	1991		X
WR	250	1992	1997		X
YZ	250	1985	1989		X
YZ	250	1990	1997		X
YZ	360	1989	→		X
YZ	360	1990	1993		X
WR-F	400	1998	2000		X
YZ-F	400	1998	2000		X
WR	500	1992	1993		X
TT-R	600	1998	2000		X
TT-RE	600	2004	2007		X

ACCOSSATO

dischi freno brake rotor

APPLICAZIONI PER CODICE DISCO / applications for rotor code

DK
DK032

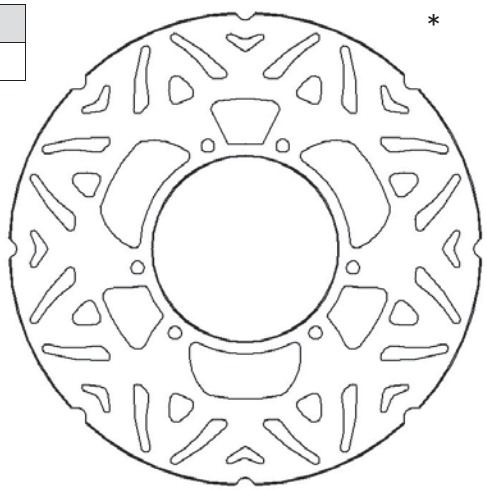

* **l'immagine del prodotto è puramente indicativa**
picture for illustrative purposes only

CODICE Reference	Ø ESTERNO Outer	Ø INTERNO Inner	SPESSORE Thickness	NR FORI No. holes	INTERASSE FORI Bolt patterns	Ø FORI Holes	CAMPANATURA Total height
DK032	220	86	4	6	102	6,25	0

CROSS REFERENCE		
ACCOSSATO	BREMBO	BRAKING
DK032	68B40742	ND

CODICE OEM	
YAMAHA	2KF258315000

DK032					
MODELLO Model	CC	DA From	A To	ANT. Front	POST. Rear
YAMAHA					
XT	600	1986	1989		X
XT-E	600	1990	1994		X
XT-E	600	1995	→		X
XT-K	600	1986	1989		X
XTZ-TENERE'	600	1986	1991		X
XTZ-TENERE'	660	1991	1996		X

DK
DK033

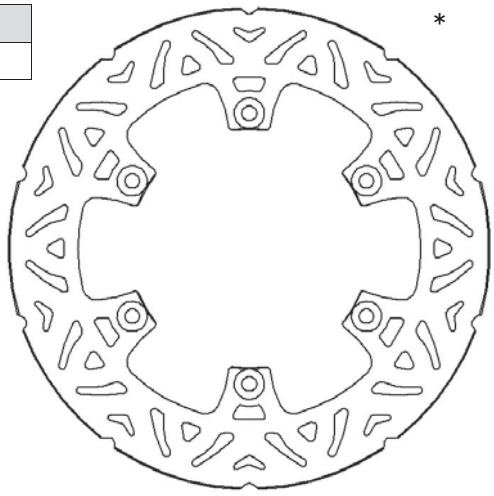

*** l'immagine del prodotto è puramente indicativa**
picture for illustrative purposes only

CODICE Reference	Ø ESTERNO Outer	Ø INTERNO Inner	SPESSORE Thickness	NR FORI No. holes	INTERASSE FORI Bolt patterns	Ø FORI Holes	CAMPANATURA Total height
DK033	267	132	5	6	150	8,5	0

CROSS REFERENCE		
ACCOSSATO	BREMBO	BRAKING
DK033	68B407E4	YA09RI

CODICE OEM	
YAMAHA	3GM2582WA000
YAMAHA	4B52582V0000

DK033					
MODELLO Model	CC	DA From	A To	ANT. Front	POST. Rear
YAMAHA					
SR	125	1995	→	X	
RD-LC	350	1985	1993	X	X
FZ-R	400	1985	→		X
RD-LC	500	1984	1988	X	

DK033					
MODELLO Model	CC	DA From	A To	ANT. Front	POST. Rear
T-MAX	500	2001	2003		X
T-MAX	500	2004	2007		X
T-MAX	500	2008	2011		X
T-MAX-ABS	500	2008	2011		X
T-MAX-BLACK-MAX	500	2004	2007		X
SRX	600	1986	→	X	
XJ-F	600	1983	1990	X	X
XT	600	1983	1985	X	
XT	600	1986	1989	X	
XT-K	600	1983	1985	X	
XT-K	600	1986	1989	X	
XT-TENERE'	600	1983	1989	X	
XTZ-TENERE'	600	1986	1991	X	
FZ	750	1985	1988	X	X
FZ-GENESIS	750	1989	1992		X
FZR-GENESIS	750	1987	→		X
FZX	750	1987	→	X	X
XJ-F	750	1983	1988	X	
XV-VIRAGO	750	1987	1993	X	X
XJ-F	900	1983	1990	X	
XJ-DIVERSION	900	1994	→		X
FZR	1000	1987	1988		X
FZR-EX-UP	1000	1989	1990		X
FZR-EX-UP	1000	1991	1991		X
FZR-EX-UP	1000	1992	1993		X
FZR-EX-UP	1000	1994	1995		X
FZR-GENESIS	1000	1987	1988		X
FZS-FAZER	1000	2001	2005		X
BT-BULLDOG	1100	2002	2006		X
XV-VIRAGO	1100	1987	1993	X	
XJR	1200	1995	1998		X
XJR	1300	1999	→		X
XJR-(BREMBO-CALIPER)	1300	1998	→		X
XJR-SP	1300	1999	→		X
MT-01	1670	2005	→		X

dischi freno brake rotor

APPLICAZIONI PER CODICE DISCO / applications for rotor code

ACCOSSATO

DK
DK035

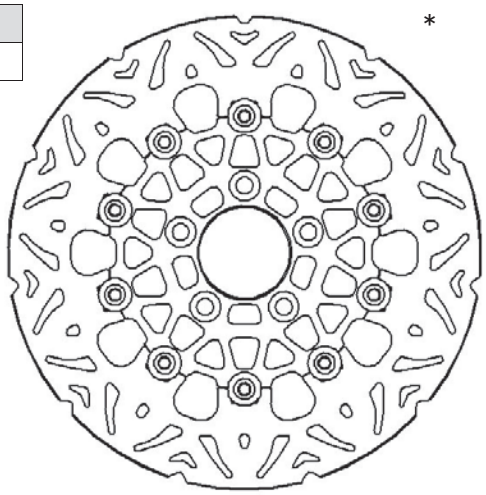

* l'immagine del prodotto è puramente indicativa
picture for illustrative purposes only

COLORI FASCIA FRENANTE / braking strip colours		
NERO	black	N

CODICE Reference	Ø ESTERNO Outer	Ø INTERNO Inner	SPESSORE Thickness	NR FORI No. holes	INTERASSE FORI Bolt patterns	Ø FORI Holes	CAMPANATURA Total height
DK035	292	56	5	4	82,5	10,5	0

CROSS REFERENCE		
ACCOSSATO	BREMBO	BRAKING
DK035	78B40828	HD01RL

CODICE OEM	
HARLEY DAVIDSON	/

DK035					
MODELLO Model	CC	DA From	A To	ANT. Front	POST. Rear
HARLEY DAVIDSON					
XL-883-SPORTSTER-CUSTOM	883	2004	2010		X
XL-SPORTSTER-CUSTOM	883	2000	2003		X
XLH-883-SPORTSTER	883	2000	2006		X
XLH-883-SPORTSTER-HUGGER	883	2000	2003		X
VRSCA-V-ROD	1130	2002	2005		X
XL-1200-SPORTSTER	1200	2004	2006		X
XL-1200-SPORTSTER-CUSTOM	1200	2000	2003		X
XL-1200-SPORTSTER-NIGHTSTER	1200	2007	2013		X
XL-1200-SPORTSTER-SPORT	1200	2000	2003		X
XL-C-SPORTSTER-CUSTOM	1200	2004	2013		X
XL-S-SPORT	1200	2000	2003		X
XLH-1200-SPORTSTER	1200	2000	2003		X
FLSTC-FAT-BOY	1340	2000	2002		X
FLSTC-HERITAGE-SOFTAIL-CLASSIC	1340	2000	2002		X
FXLR-1340-LOW-RIDER-CUSTOM	1340	2000	2000		X
FXSTS-1340-SPRINGER-SOFTAIL	1340	2000	2002		X
FLHR/I-ROAD-KING	1450	2000	2007		X
FLHRCI-ROAD-KING-CLASSIC	1450	2000	2006		X

DK035					
MODELLO Model	CC	DA From	A To	ANT. Front	POST. Rear
FLHT/I ELECTRA-GLIDE-STANDARD	1450	2000	2006		X
FLHTCUI-ELECTRA-GLIDE-ULTRA-CLAS.	1450	2000	2006		X
FLSTC-HERITAGE-SOFTAIL-CLASSIC	1450	2000	2006		X
FLSTF-FAT-BOY	1450	2000	2006		X
FLSTS/I-HERITAGE-SPRINGER	1450	2000	2003		X
FLTR/I-ROAD-GLIDE-CLASSIC	1450	2000	2007		X
FXD-DYNA-SUPER-GLIDE	1450	2000	2003		X
FXD-DYNA-SUPER-GLIDE	1450	2006	2007		X
FXDC-DYNA-SUPER-GLIDE-CUSTOM	1450	2006	2007		X
FXDL-DYNA-GLIDE-LOW-RIDER	1450	2000	2006		X
FXDS-DYNA-SUPER-GLIDE-SPORT	1450	2000	2006		X
FXDWG-DYNA-WIDE-GLIDE	1450	2000	2007		X
FXDX-DYNA-SUPER-GLIDE-T-SPORT	1450	2000	2005		X
FXST-SOFTAIL-STANDARD	1450	2000	2007		X
FXSTB/I-NIGHT-TRAIN	1450	2000	2007		X
FXSTD-SOFTAIL-DEUCE	1450	2000	2006		X
FXSTS/I-SPRINGER-SOFTAIL	1450	2000	2006		X
FLHRCI-ROAD-KING-CLASSIC	1584	2007	2007		X
FLHT/I ELECTRA-GLIDE-STANDARD	1584	2007	2007		X
FLHTCUI-ELECTRA-GLIDE-ULTRA-CLAS.	1584	2007	2008		X
FLHX-STREET-GLIDE	1584	2006	2007		X
FLSTB-FAT-BOY-SPECIAL	1584	2010	2013		X
FLSTB-SOFTAIL-CROSS-BONES	1584	2008	2001		X
FLSTC-HERITAGE-SOFTAIL-CLASSIC	1584	2007	2014		X
FLSTF-FAT-BOY	1584	2007	2014		X
FLSTSE-CVO-SOFTAIL-CONVERTIBLE	1584	2010	2011		X
FXCW-ROCKER	1584	2008	2009		X
FXCWC-ROCKER-C	1584	2008	2013		X
FXD-DYNA-SUPER-GLIDE	1584	2008	2010		X
FXDB-DYNA-STREET-BOB	1584	2008	2014		X
FXDC-DYNA-SUPER-GLIDE-CUSTOM	1584	2008	2014		X
FXDF-FAT-BOB	1584	2008	2014		X
FXDL-DYNA-LOW-RIDER	1584	2007	2010		X
FXDWG-DYNA-WIDE-GLIDE	1584	2008	2014		X
FXS-BLACKLINE	1584	2011	2013		X
FXSTB-NIGHT-TRAIN	1584	2008	2010		X
FXSTC-SOFTAIL-CUSTOM	1584	2008	2010		X
FXSTSS-CVO-SOFTAIL-SPRINGER	1584	2009	2009		X
FLD-SWITCHBACK	1690	2012	2014		X
FLS-SOFTAIL-SLIM	1690	2012	2014		X

ACCOSSATO

dischi freno brake rotor

APPLICAZIONI PER CODICE DISCO / applications for rotor code

DK
DK036

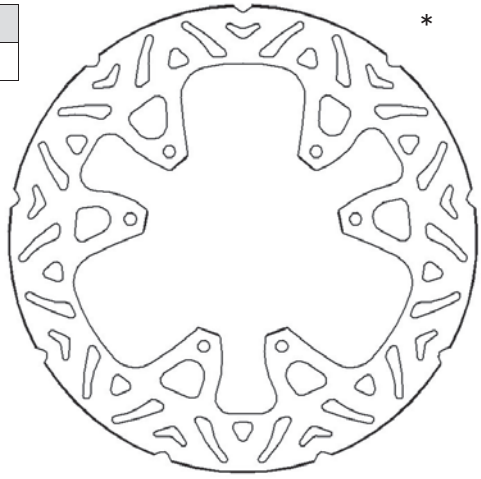

*

*** l'immagine del prodotto è puramente indicativa**
picture for illustrative purposes only

CODICE Reference	Ø ESTERNO Outer	Ø INTERNO Inner	SPESSORE Thickness	NR FORI No. holes	INTERASSE FORI Bolt patterns	Ø FORI Holes	CAMPANATURA Total height
DK036	240	101	3	6	117	6,25	0

CROSS REFERENCE			CODICE OEM	
ACCOSSATO	BREMBO	BRAKING	HM	RDP003
DK036	68B40796	ND	HONDA	/

DK036

MODELLO Model	CC	DA From	A To	ANT. Front	POST. Rear
HM					
CRF-ENDURO	230	2004	2010	X	
CRE-F	250	2004	2009	X	
CRE-X	250	2004	2009	X	
CRE-X-ENDURO	250	2004	2009	X	
CRF-R	450	2002	→	X	
HONDA					
CR-E	125	1995	1997	X	
CR-E	125	1998	2001	X	
CR-E	125	2002	2008	X	
CR-R	125	1995	1997	X	
CR-R	125	1998	2001	X	
CR-R	125	2002	2008	X	
CRF-ENDURO	230	2004	2006	X	
CR-E	250	1995	1996	X	
CR-E	250	2002	2008	X	
CR-R	250	1995	1996	X	
CR-R	250	2002	2008	X	
CRF-R	250	2004	2014	X	
CRF-X	250	2004	2007	X	
CRF R	450	2002	2014	X	
CRF X	450	2004	2012	X	
CR-E	500	1995	2001	X	
CR-R	500	1995	2001	X	

DK
DK037

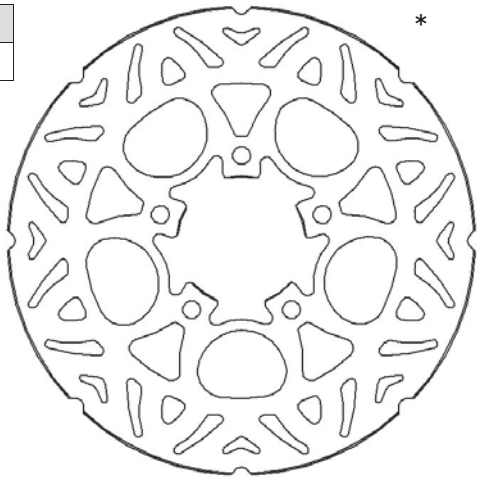

*

*** l'immagine del prodotto è puramente indicativa**
picture for illustrative purposes only

CODICE Reference	Ø ESTERNO Outer	Ø INTERNO Inner	SPESSORE Thickness	NR FORI No. holes	INTERASSE FORI Bolt patterns	Ø FORI Holes	CAMPANATURA Total height
DK037	220	60	4	5	80	8,5	0

CROSS REFERENCE			CODICE OEM	
ACCOSSATO	BREMBO	BRAKING	APRILIA	AP8113541
DK037	68B40732	AP16FI	DERBI	AP8113541

DK037

MODELLO Model	CC	DA From	A To	ANT. Front	POST. Rear
APRILIA					
SCARABEO	50	1998	2005	X	
SCARABEO 4T	50	2002	2009	X	
SCARABEO 4T RESTYLING	50	2006	2008	X	
SCARABEO 4V4T	50	2013	→	X	
SCARABEO BRIGHT	50	1998	→	X	
SCARABEO DE LUXE	50	1998	→	X	
SCARABEO DITECH	50	2002	2004	X	
SCARABEO DITECH	50	2005	→	X	
SCARABEO STREET	50	1998	→	X	
SCARABEO	100	1999	→	X	
LEONARDO	125	1995	2002	X	
LEONARDO ST	125	2003	→	X	
SCARABEO	125	1999	2003		X
SCARABEO GT	125	1999	2003		X
SPORTCITY	125	2006	2007		X
SPORTCITY CUBE	125	2009	→		X
SPORTCITY STREET	125	2012	2012		X
LEONARDO	150	1996	1998	X	
LEONARDO ST	150	1999	2002	X	X
SCARABEO	150	1999	2003		X
SCARABEO GT	200	2001	2006		X
SPORTCITY	200	2004	2008		X
SPORTCITY CUBE	200	2008	2010		X
LEONARDO	250	1999	2004	X	
SPORTCITY	250	2006	2008		X
SPORTCITY CUBE	250	2008	2012		X
LEONARDO ST	300	2005	2006	X	
SPORTCITY CUBE	300	2008	→		X
DERBI					
BOULEVARD-S	125	2007	→		X
RAMBLA	125	2009	2011		X
RAMBLA	250	2009	→		X
RAMBLA	300	2010	2011		X

dischi freno brake rotor

APPLICAZIONI PER CODICE DISCO / applications for rotor code

DK
DK038

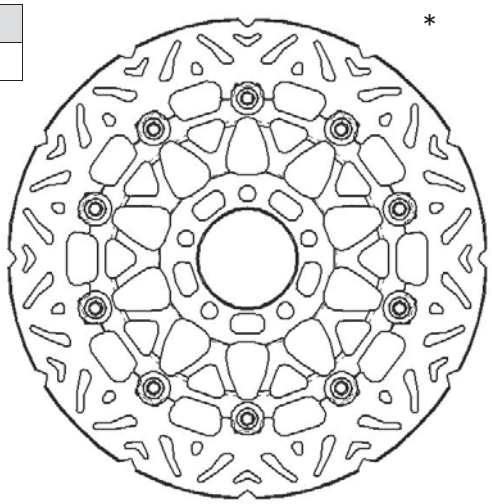

*

DK
DK039



*

* **l'immagine del prodotto è puramente indicativa**
picture for illustrative purposes only

COLORI FASCIA FRENANTE / braking strip colours		
NERO	black	N

CODICE Reference	Ø ESTERNO Outer	Ø INTERNO Inner	SPESSORE Thickness	NR FORI No. holes	INTERASSE FORI Bolt patterns	Ø FORI Holes	CAMPANATURA Total height
DK038	300	61	5	5	81	10,5	13,5

CROSS REFERENCE		
ACCOSSATO	BREMBO	BRAKING
DK038	78B40841	STX08

CODICE OEM	
KAWASAKI	410800001488
KAWASAKI	410800045S6
KAWASAKI	410801442A4

DK038					
MODELLO Model	CC	DA From	A To	ANT. Front	POST. Rear
KAWASAKI					
ZZR	250	1992	→	X	
ZXR	400	1989	1990	X	
ZR-ZEPHYR	550	1993	2001	X	
ZL-ELIMINATOR	600	1995	1999	X	
ZX-6R	600	1995	1997	X	
ZX-6R	600	1998	2002	X	
ZZR	600	1990	1992	X	
ZZR	600	1993	2006	X	
ZX-6R	636	2002	2002	X	
Z-750	750	2004	2006	X	
Z-750-S	750	2005	2006	X	
ZEPHYR	750	1991	2003	X	
ZR-7	750	1999	2003	X	
ZR-7S	750	1999	2003	X	
GPZ-R	900	1990	2003	X	
GTR	1000	1994	2006	X	
Z	1000	2003	2006	X	
GPZ	1100	1995	1998	X	
ZX12R-NINJA	1200	2005	2006	X	

* **l'immagine del prodotto è puramente indicativa**
picture for illustrative purposes only

CODICE Reference	Ø ESTERNO Outer	Ø INTERNO Inner	SPESSORE Thickness	NR FORI No. holes	INTERASSE FORI Bolt patterns	Ø FORI Holes	CAMPANATURA Total height
DK039	230	82	6	5	104	10,5	0

CROSS REFERENCE		
ACCOSSATO	BREMBO	BRAKING
DK039	68B40761	KW09RI

CODICE OEM	
KAWASAKI	410801242FB

DK039					
MODELLO Model	CC	DA From	A To	ANT. Front	POST. Rear
KAWASAKI					
ZX-7R	750	1996	2002		X
ZX-7R	750	1999	2003		X
ZX-7-RR	750	1993	2004		X
ZXR-R	750	1989	1995		X
ZX-9R	900	1994	1997		X
GTR	1000	1986	1993		X
ZEPHYR	1100	1992	1998		X

ACCOSSATO

dischi freno brake rotor

APPLICAZIONI PER CODICE DISCO / applications for rotor code

DK
DK040

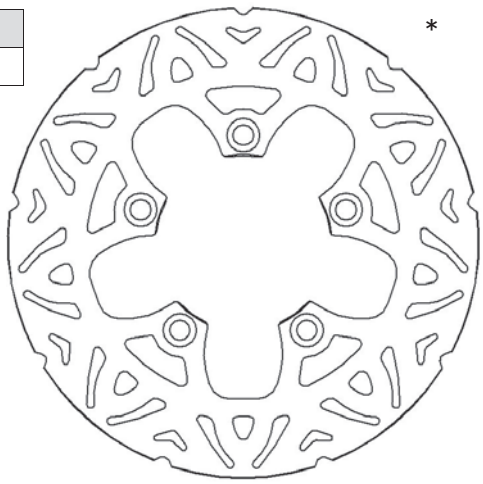

* **l'immagine del prodotto è puramente indicativa**
picture for illustrative purposes only

CODICE Reference	Ø ESTERNO Outer	Ø INTERNO Inner	SPESSORE Thickness	NR FORI No. holes	INTERASSE FORI Bolt patterns	Ø FORI Holes	CAMPANATURA Total height
DK040	240	89	5	5	110	10,5	0

CROSS REFERENCE		
ACCOSSATO	BREMBO	BRAKING
DK040	68B40771	SZ08RI

CODICE OEM	
KYMCO	143068
KYMCO	143186
SUZUKI	69211-38G00-000

DK040

MODELLO Model	CC	DA From	A To	ANT. Front	POST. Rear
KYMCO					
DINK	50	2008	→	X	
NEW-DINK	50	2008	→	X	
DOWNTOWN-I	125	2015	→		X
K-XCTI	125	2013	→		X
SUPER-DINK	125	2009	2013		X
DOWNTOWN-I	300	2009	2014		X
K-XCTI	300	2012	→		X
DOWNTOWN-I-ABS	350	2015	→		X
SUZUKI					
GSF-BANDIT	600	1995	2004		X
GSF-BANDIT-S	600	1995	2004		X
GSX-F	600	1998	2003		X
GSX-F	600	2004	2006		X
RF-R	600	1993	1997		X
GSF-BANDIT	650	2005	2006		X
GSF-BANDIT-S	650	2005	2006		X
SV	650	1999	2002		X
SV-S	650	1999	2002		X
GSX	750	1997	2003		X
GSX-F	750	1998	2003		X
GSX-F	750	2004	2006		X
GSX-R	750	1988	1989		X
GSX-R	750	1990	1995		X
RF-F	900	1994	1997		X
GSX-R	1100	1989	1989		X
GSX-R	1100	1990	1992		X
GSX-R-W	1100	1993	2000		X
GSF-BANDIT	1200	1997	2005		X
GSF-BANDIT-S	1200	1997	2005		X
GSX	1200	1999	2001		X
GSX	1200	2002	→		X
GSX-F	1250	2010	→		X
GSX-R-HAYABUSA	1300	1999	2007		X

DK
DK041

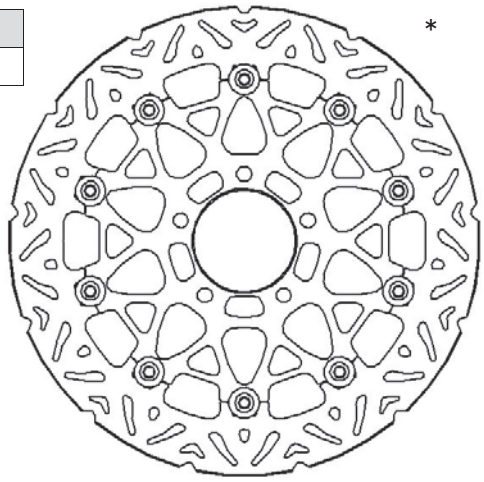

* **l'immagine del prodotto è puramente indicativa**
picture for illustrative purposes only

COLORI FASCIA FRENANTE / braking strip colours		
NERO	black	N

CODICE Reference	Ø ESTERNO Outer	Ø INTERNO Inner	SPESSORE Thickness	NR FORI No. holes	INTERASSE FORI Bolt patterns	Ø FORI Holes	CAMPANATURA Total height
DK041	320	69	5	5	91	10,5	0

CROSS REFERENCE		
ACCOSSATO	BREMBO	BRAKING
DK041	78B40875	STX20

CODICE OEM	
SUZUKI	59210-33E80-000
SUZUKI	59210-33E30-000

DK041

MODELLO Model	CC	DA From	A To	ANT. Front	POST. Rear
SUZUKI					
GSX-R	600	1997	2003	X	
GSX-R	750	1996	2003	X	
GSX-R	1000	2001	2002	X	
TL-R	1000	1998	2003	X	
TL-S	1000	1997	2001	X	
GSX-R-HAYABUSA	1300	1999	2007	X	
GSX	1400	2002	2007	X	

dischi freno brake rotor

APPLICAZIONI PER CODICE DISCO / applications for rotor code

DK
DK042

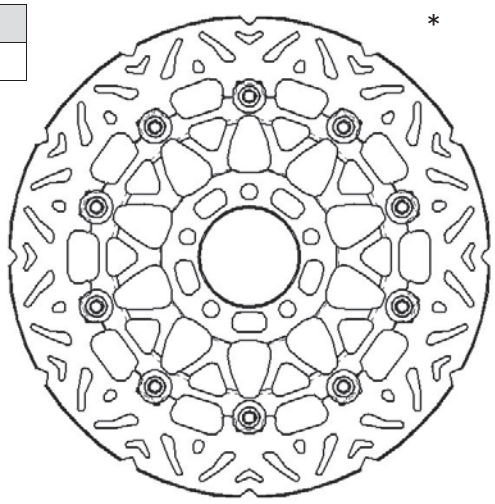

* **l'immagine del prodotto è puramente indicativa**
picture for illustrative purposes only

COLORI FASCIA FRENANTE / braking strip colours		
NERO	black	N

CODICE Reference	Ø ESTERNO Outer	Ø INTERNO Inner	SPESSORE Thickness	NR FORI No. holes	INTERASSE FORI Bolt patterns	Ø FORI Holes	CAMPANATURA Total height
DK042	310	61	5	5	81	10,5	13,5

CROSS REFERENCE		
ACCOSSATO	BREMBO	BRAKING
DK042	78B40899	STX06

CODICE OEM	
KAWASAKI	410801468A4

DK042					
MODELLO Model	CC	DA From	A To	ANT. Front	POST. Rear
KAWASAKI					
ZXR	750	1989	1990	X	
ZX-9R	900	2000	2001	X	
ZEPHYR	1100	1992	1998	X	
ZRX	1100	1997	2000	X	
ZZR	1100	1990	1992	X	
ZX1200	1200	2001	2008	X	

DK
DK044

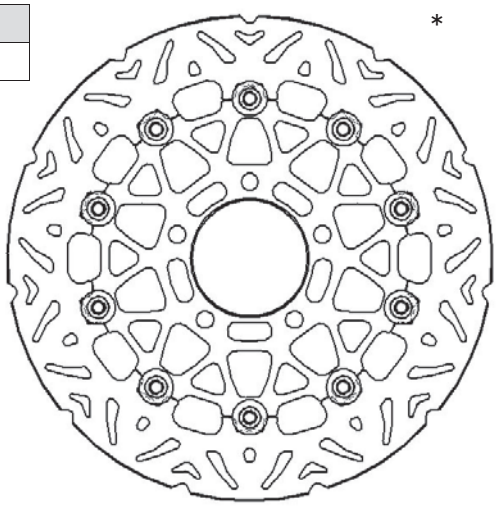

* **l'immagine del prodotto è puramente indicativa**
picture for illustrative purposes only

COLORI FASCIA FRENANTE / braking strip colours		
NERO	black	N

CODICE Reference	Ø ESTERNO Outer	Ø INTERNO Inner	SPESSORE Thickness	NR FORI No. holes	INTERASSE FORI Bolt patterns	Ø FORI Holes	CAMPANATURA Total height
DK044	290	69	5	5	91	10,5	0

CROSS REFERENCE		
ACCOSSATO	BREMBO	BRAKING
DK044	78B40821	ND

CODICE OEM	
SUZUKI	59210-38G10-000

DK044					
MODELLO Model	CC	DA From	A To	ANT. Front	POST. Rear
SUZUKI					
GSX-F	600	2004	2006	X	
GSF-BANDIT	650	2005	2006	X	
GSF-BANDIT-S	650	2005	2006	X	
SV	650	2003	2010	X	
SV-S	650	2003	2010	X	
GSX-F	750	2004	2006	X	

ACCOSSATO

dischi freno brake rotor

APPLICAZIONI PER CODICE DISCO / applications for rotor code

DK
DK045

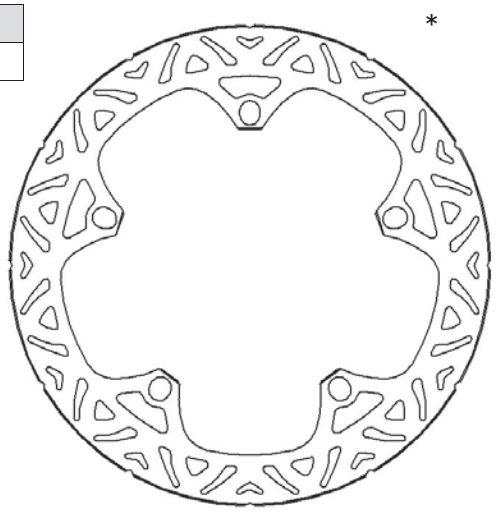

* **l'immagine del prodotto è puramente indicativa**
picture for illustrative purposes only

CODICE Reference	Ø ESTERNO Outer	Ø INTERNO Inner	SPESSORE Thickness	NR FORI No. holes	INTERASSE FORI Bolt patterns	Ø FORI Holes	CAMPANATURA Total height
DK045	320	181	5	5	203	14	0

CROSS REFERENCE		
ACCOSSATO	BREMBO	BRAKING
DK045	168B407D7	ND

CODICE OEM	
BMW	/

DK045					
MODELLO Model	CC	DA From	A To	ANT. Front	POST. Rear
BMW					
F-800-ABS	800	2008	2013	X	
F-800-GT	800	2013	→	X	
F-800-R	800	2009	2011	X	
F-800-S	800	2008	2010	X	
S-1000-R	1000	2014	→	X	
S-1000-RR	1000	2009	→	X	
S-1000-XR	1000	2015	→	X	
HP2-MEGAMOTO	1200	2008	2010	X	
HP2-SPORT	1200	2008	2011	X	
K-1200-GT	1200	2008	→	X	
K-1200-S	1200	2008	→	X	
K-1200-S-ABS	1200	2008	→	X	
R-1200-R	1200	2008	2012	X	
R-1200-R	1200	2015	→	X	
R-1200-RS	1200	2015	→	X	
R-1200-RT	1200	2008	2012	X	
R-1200-RT	1200	2014	→	X	
R-1200-S	1200	2008	→	X	
R-1200-ST	1200	2008	→	X	
R-NINE-T	1200	2014	→	X	
K-1300-GT	1300	2009	2010	X	
K-1300-R	1300	2008	2013	X	
K-1300-S	1300	2009	2012	X	
K-1300-S	1300	2015	→	X	
K-1600-GT	1600	2011	2012	X	
K-1600-GTL	1600	2011	2012	X	

DK
DK046

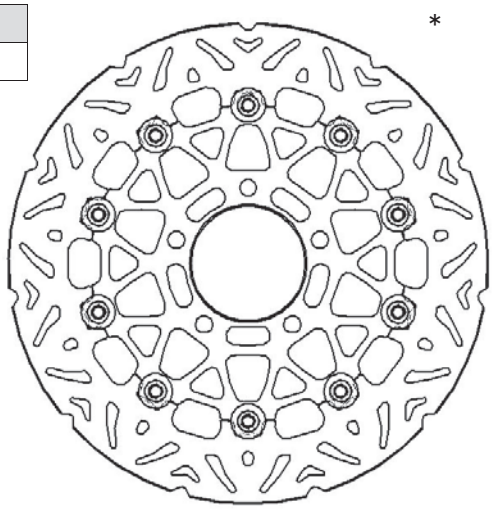

* **l'immagine del prodotto è puramente indicativa**
picture for illustrative purposes only

COLORI FASCIA FRENANTE / braking strip colours		
NERO	black	N
ROSSO	red	R

CODICE Reference	Ø ESTERNO Outer	Ø INTERNO Inner	SPESSORE Thickness	NR FORI No. holes	INTERASSE FORI Bolt patterns	Ø FORI Holes	CAMPANATURA Total height
DK046	330	72	5	5	90	8,5	14,5

CROSS REFERENCE		
ACCOSSATO	BREMBO	BRAKING
DK046	78B40890	ND

CODICE OEM	
DUCATI	49240891A

DK046					
MODELLO Model	CC	DA From	A To	ANT. Front	POST. Rear
DUCATI					
848-EVO	848	2011	→	X	
848-EVO-CORSE-SPECIAL-EDITION	848	2012	→	X	
DESMOSEDICI-RR	1000	2008	→	X	
1098/R/S/TRICOLORE	1098	2007	→	X	
STREETFIGHTER	1098	2009	→	X	
STREETFIGHTER-S	1098	2009	→	X	
1098-BAYLISS	1198	2009	→	X	
1098-R	1198	2009	→	X	
1198	1198	2009	→	X	
1198-S	1198	2009	→	X	
1198-SP	1198	2011	→	X	
PANIGALE	1199	2012	→	X	
PANIGALE-R	1199	2013	→	X	
PANIGALE-S	1199	2012	→	X	
PANIGALE-S-ABS	1199	2012	→	X	
PANIGALE-S-TRICOLORE-ABS	1199	2012	→	X	
SUPERLEGGERA	1199	2014	→	X	
PANIGALE	1299	2015	→	X	
PANIGALE-R	1299	2015	→	X	
PANIGALE-S	1299	2015	→	X	

dischi freno brake rotor

APPLICAZIONI PER CODICE DISCO / applications for rotor code

DK
DK047

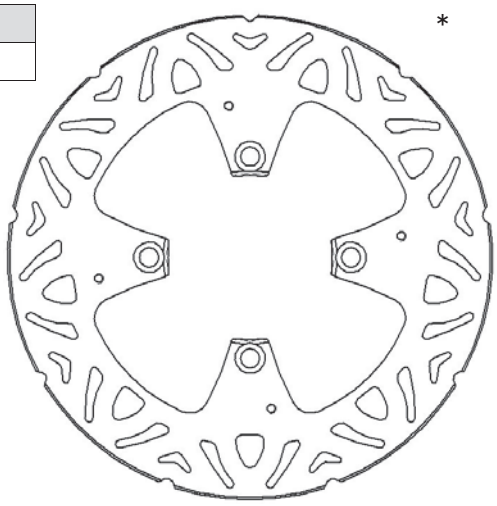

* l'immagine del prodotto è puramente indicativa
picture for illustrative purposes only

DK
DK048

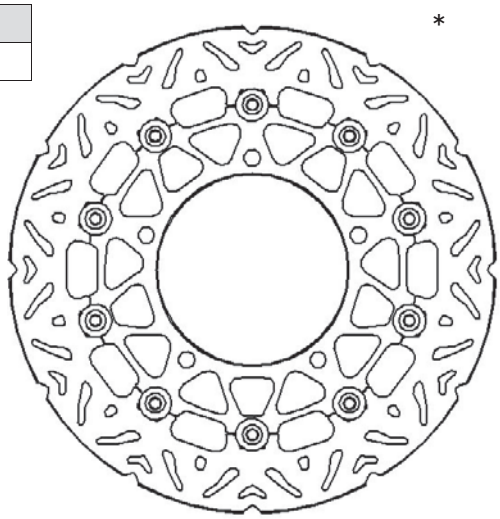

* l'immagine del prodotto è puramente indicativa
picture for illustrative purposes only

COLORI FASCIA FRENANTE / braking strip colours		
NERO	black	N
ROSSO	red	R
BLU	blue	B

CODICE Reference	Ø ESTERNO Outer	Ø INTERNO Inner	SPESSORE Thickness	NR FORI No. holes	INTERASSE FORI Bolt patterns	Ø FORI Holes	CAMPANATURA Total height
DK047	245	83	5	4	102	9,85	0

CROSS REFERENCE		
ACCOSSATO	BREMBO	BRAKING
DK047	68B407H1	RF7524

CODICE OEM	
DUCATI	49210061A

DK047					
MODELLO Model	CC	DA From	A To	ANT. Front	POST. Rear
DUCATI					
MULTISTRADA/S	1100	2007	2009		X
PANIGALE	1199	2012	→		X
PANIGALE-R	1199	2013	→		X
PANIGALE-S	1199	2012	→		X
PANIGALE-S-ABS	1199	2012	→		X
PANIGALE-S-TRICOLORE-ABS	1199	2012	→		X
SUPERLEGGERA	1199	2014	→		X
MONSTER	1200	2014	→		X
MONSTER-R	1200	2015	→		X
MONSTER-S	1200	2014	→		X
MONSTER-S-STRIPE	1200	2015	→		X
MULTISTRADA	1200	2010	2012		X
MULTISTRADA-ABS	1200	2010	→		X
MULTISTRADA-S-GT	1200	2013	→		X
MULTISTRADA-S-PIKES-PEAK	1200	2013	→		X
MULTISTRADA-S-SPORT	1200	2011	2012		X
MULTISTRADA-S-TOURING	1200	2013	→		X
PANIGALE	1299	2015	→		X
PANIGALE-R	1299	2015	→		X
PANIGALE-S	1299	2015	→		X

CROSS REFERENCE		
ACCOSSATO	BREMBO	BRAKING
DK048	78B40866	RL7010

CODICE OEM	
SUZUKI	59210-44G11-000

DK048					
MODELLO Model	CC	DA From	A To	ANT. Front	POST. Rear
SUZUKI					
GSR	400	2006	2008	X	
GSR	600	2006	2010	X	
DL-V-STROM	650	2007	2012	X	
DL-V-STROM-ABS	650	2007	→	X	
DL-V-STROM XT (left/rear)	650	2015	→	X	
GSF-BANDIT	650	2007	2012	X	
GSF-BANDIT-ABS	650	2011	2014	X	
GSF-BANDIT-S	650	2007	2012	X	
GSX-F	650	2008	2012	X	
GSX-F-ABS	650	2008	2014	X	
GSR	750	2011	2014	X	
GSR-ABS	750	2011	2014	X	
DL-V-STROM-ABS	1000	2014	→	X	
GSF-BANDIT	1200	2006	→	X	
GSF-BANDIT	1250	2007	2011	X	
GSF-BANDIT-ABS	1250	2015	→	X	
GSF-BANDIT-S	1250	2011	2012	X	
GSF-BANDIT-S-ABS	1250	2011	→	X	
GSX-FA	DK	2010	→	X	
B-KING	1300	2008	2010	X	
GSX-R-HAYABUSA	1300	2008	→	X	

ACCOSSATO

dischi freno brake rotor

APPLICAZIONI PER CODICE DISCO / applications for rotor code

DK
DK049

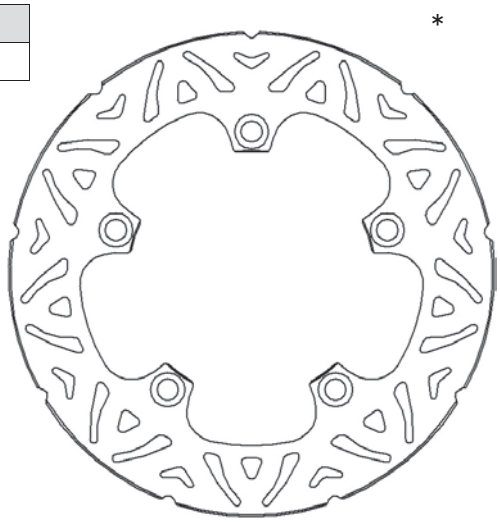

* l'immagine del prodotto è puramente indicativa
picture for illustrative purposes only

CODICE Reference	Ø ESTERNO Outer	Ø INTERNO Inner	SPESSORE Thickness	NR FORI No. holes	INTERASSE FORI Bolt patterns	Ø FORI Holes	CAMPANATURA Total height
DK049	240	120,5	5	5	141	10,5	0

CROSS REFERENCE		
ACCOSSATO	BREMBO	BRAKING
DK049	68B40785	RF7535

CODICE OEM	
SUZUKI	69211-38G00-000

DK049					
MODELLO Model	CC	DA From	A To	ANT. Front	POST. Rear
SUZUKI					
GSR	400	2006	2008		X
GSR	600	2006	2010		X
GLADIUS	650	2009	2014		X
GLADIUS-ABS	650	2009	2014		X
GSF-BANDIT	650	2007	2012		X
GSF-BANDIT-ABS	650	2011	2014		X
GSF-BANDIT-S	650	2007	2012		X
GSX-F	650	2008	2012		X
GSX-F-ABS	650	2008	2014		X
GSR	750	2011	2014		X
GSR-ABS	750	2011	2014		X
GSF-BANDIT	1200	2006	→		X
GSF-BANDIT	1250	2007	2011		X
GSF-BANDIT-ABS	1250	2015	→		X
GSF-BANDIT-S	1250	2011	2012		X
GSF-BANDIT-S-ABS	1250	2011	→		X
GSX-FA	1250	2010	→		X

DK
DK050

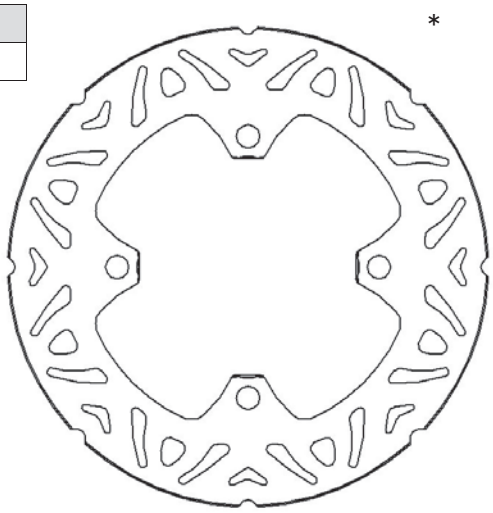

* l'immagine del prodotto è puramente indicativa
picture for illustrative purposes only

CODICE Reference	Ø ESTERNO Outer	Ø INTERNO Inner	SPESSORE Thickness	NR FORI No. holes	INTERASSE FORI Bolt patterns	Ø FORI Holes	CAMPANATURA Total height
DK050	220	100	5	4	120	10,5	0

CROSS REFERENCE		
ACCOSSATO	BREMBO	BRAKING
DK050	68B40747	ND

CODICE OEM	
KAWASAKI	410800040

DK050					
MODELLO Model	CC	DA From	A To	ANT. Front	POST. Rear
KAWASAKI					
ZX-6R	600	1998	2002		X
ZX-6R	600	2007	2012		X
ZX-6R	600	2013	→		X
ZX-6RR	600	2003	2004		X
ZX-6RR	600	2005	2006		X
ZX-6-RR	636	2003	2006		X
ZX-6R	636	2002	2002		X
ZX-6R	636	2003	2004		X
ZX-6R	636	2005	2006		X
ZX-6R-ABS	636	2013	→		X
ER-6F	650	2006	→		X
ER-6N	650	2006	→		X
VERSYS	650	2007	2014		X
VERSYS-ABS	650	2007	2014		X
Z-750	750	2004	2006		X
Z-750-S	750	2005	2006		X
ZX-9R	900	1998	1999		X
ZX-9R	900	2000	2001		X
ZX-9R	900	2002	2004		X
Z	1000	2003	2006		X
ZX-10-R	1000	2004	2010		X
ZX-10-R-(ABS)	1000	2011	→		X

dischi freno brake rotor

APPLICAZIONI PER CODICE DISCO / applications for rotor code

DK
DK051

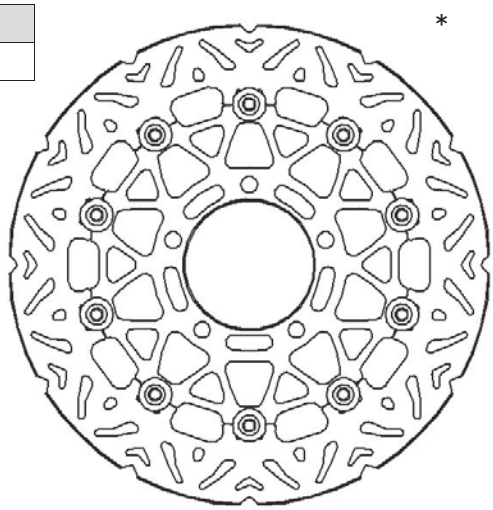

* **l'immagine del prodotto è puramente indicativa**
picture for illustrative purposes only

COLORI FASCIA FRENANTE / braking strip colours		
NERO	black	N
VERDE	green	G

CODICE Reference	Ø ESTERNO Outer	Ø INTERNO Inner	SPESSORE Thickness	NR FORI No. holes	INTERASSE FORI Bolt patterns	Ø FORI Holes	CAMPANATURA Total height
DK051	300	80	5	5	100	10,5	0

CROSS REFERENCE		
ACCOSSATO	BREMBO	BRAKING
DK051	78B40840	STX70

CODICE OEM	
KAWASAKI	41080016311I

DK051					
MODELLO Model	CC	DA From	A To	ANT. Front	POST. Rear
KAWASAKI					
ZX-6R	600	2007	2012	X	
ZX-6R	600	2013	→	X	
ZX-6RR	600	2005	2006	X	
ZX-6R	636	2005	2006	X	
ER-6F	650	2006	→	X	
ER-6N	650	2006	→	X	
VERSYS	650	2007	2014	X	
Z-750-ABS	750	2007	→	X	
Z-750-R	750	2011	2012	X	
Z-750-R-ABS	750	2011	2012	X	
VERSYS	1000	2012	2014	X	
Z	1000	2007	→	X	
Z-SX	1000	2011	→	X	
Z-SX-ABS	1000	2011	→	X	
Z1000-ABS	1000	2007	→	X	
ZX-10-R	1000	2004	2010	X	

DK052
DK052

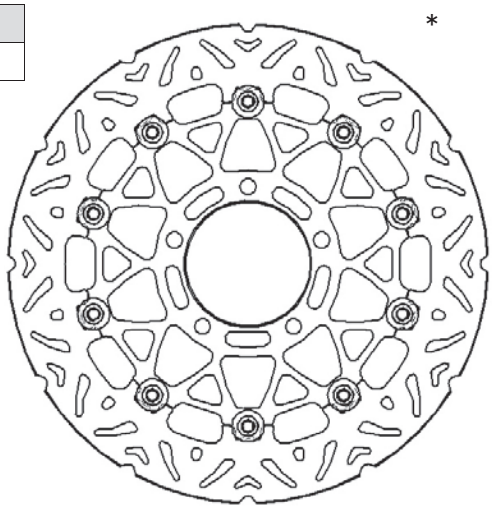

* **l'immagine del prodotto è puramente indicativa**
picture for illustrative purposes only

COLORI FASCIA FRENANTE / braking strip colours		
NERO	black	N
VERDE	green	G

CODICE Reference	Ø ESTERNO Outer	Ø INTERNO Inner	SPESSORE Thickness	NR FORI No. holes	INTERASSE FORI Bolt patterns	Ø FORI Holes	CAMPANATURA Total height
DK052	310	80,5	5	5	100	10,5	0

CROSS REFERENCE		
ACCOSSATO	BREMBO	BRAKING
DK052	78B40861	STX90

CODICE OEM	
KAWASAKI	4108005775C
KAWASAKI	410800159488
KAWASAKI	4108001025C

DK052					
MODELLO Model	CC	DA From	A To	ANT. Front	POST. Rear
KAWASAKI					
ZX-6R-ABS	636	2013	→	X	
Z-800	800	2013	→	X	
Z-800-ABS	800	2013	→	X	
Z-800-E	800	2013	→	X	
ZX-10-R-(ABS)	1000	2011	→	X	
GTR	1400	2007	2011	X	
ZZR	1400	2006	→	X	
ZZR-ABS	1400	2006	→	X	

ACCOSSATO

dischi freno brake rotor

APPLICAZIONI PER CODICE DISCO / applications for rotor code

DK
DK053

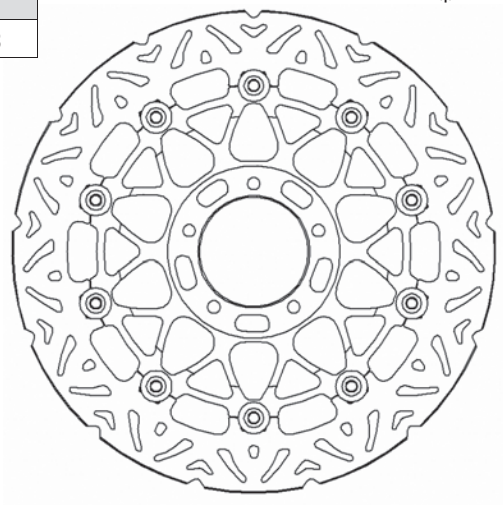

* **l'immagine del prodotto è puramente indicativa**
picture for illustrative purposes only

COLORI FASCIA FRENANTE / braking strip colours		
NERO	black	N
ROSSO	red	R

CODICE Reference	Ø ESTERNO Outer	Ø INTERNO Inner	SPESSORE Thickness	NR FORI No. holes	INTERASSE FORI Bolt patterns	Ø FORI Holes	CAMPANATURA Total height
DK053	320	72	4,5	5	90	8,5	10

CROSS REFERENCE			CODICE OEM	
ACCOSSATO	BREMBO	BRAKING	DUCATI	49241011A
DK053	78B40878	STX110		

DK053

MODELLO Model	CC	DA From	A To	ANT. Front	POST. Rear
DUCATI					
MONSTER-ABS	796	2010	2012	X	
MONSTER-ABS-ANNIVERSARY	796	2013	→	X	
MONSTER-ANNIVERSARY	796	2013	→	X	
HYPERMOTARD	820	2013	→	X	
HYPERMOTARD-SP	820	2013	→	X	
HYPERMOTARD-TOURING	820	2013	→	X	
HYPERSTRADA	820	2013	→	X	
HYPERMOTARD-SP	821	2015	→	X	
MONSTER-821	821	2015	→	X	
MONSTER-821-DARK	821	2015	→	X	
MONSTER-821-STRIPE	821	2015	→	X	
MONSTER	1100	2009	→	X	
MONSTER-EVO-ABS	1100	2011	→	X	
MONSTER-EVO-ABS-ANNIVERSARY	1100	2011	2011	X	
MULTISTRADA/S	1100	2007	2009	X	
DIAVEL	1200	2011	→	X	
DIAVEL-CARBON	1200	2013	→	X	
DIAVEL-DARK	1200	2013	→	X	
DIAVEL-STRADA	1200	2013	→	X	
DIAVEL-TITANIUM	1200	2015	→	X	
MONSTER	1200	2014	→	X	
MULTISTRADA	1200	2010	2012	X	
MULTISTRADA	1200	2015	→	X	
MULTISTRADA-ABS	1200	2010	→	X	
MULTISTRADA-S-GT	1200	2013	→	X	
MULTISTRADA-S-PIKES-PEAK	1200	2013	→	X	
MULTISTRADA-S-TOURING	1200	2013	→	X	
MULTISTRADA-TOURING-ABS	1200	2010	→	X	

DK
DK056

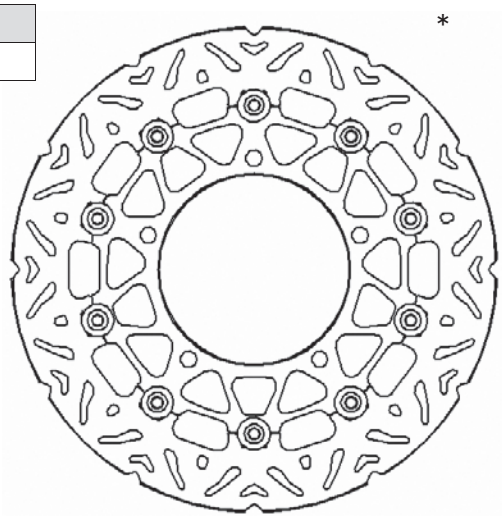

* **l'immagine del prodotto è puramente indicativa**
picture for illustrative purposes only

COLORI FASCIA FRENANTE / braking strip colours		
NERO	black	N

CODICE Reference	Ø ESTERNO Outer	Ø INTERNO Inner	SPESSORE Thickness	NR FORI No. holes	INTERASSE FORI Bolt patterns	Ø FORI Holes	CAMPANATURA Total height
DK056	267	132	5	5	150	8,5	0

CROSS REFERENCE			CODICE OEM	
ACCOSSATO	BREMBO	BRAKING	YAMAHA	5VU2581T0100
DK056	78B40817	RF8116	YAMAHA	59C2581T0000
			YAMAHA	1B9F582U0000

DK056

MODELLO Model	CC	DA From	A To	ANT. Front	POST. Rear
YAMAHA					
X-MAX	125	2005	2013	X	
X-MAX	125	2014	→	X	
X-MAX-ABS	125	2013	→	X	
X-MAX	250	2005	2013	X	
X-MAX	250	2014	→	X	
X-MAX-ABS	250	2013	→	X	
X-MAX-SPORT	250	2011	2013	X	
X-MAX-SPORT	250	2014	→	X	
MAJESTY	400	2004	2007	X	
MAJESTY-ABS	400	2008	→	X	
T-MAX	500	2004	2007	X	
T-MAX-BLACK-MAX	500	2004	2007	X	
T-MAX	530	2012	→	X	
T-MAX-ABS	530	2012	→	X	
T-MAX-BRONZE-MAX/ABS	530	2013	→	X	
T-MAX-IRON-MAX	530	2015	→	X	

dischi freno brake rotor

APPLICAZIONI PER CODICE DISCO / applications for rotor code

DK
DK058

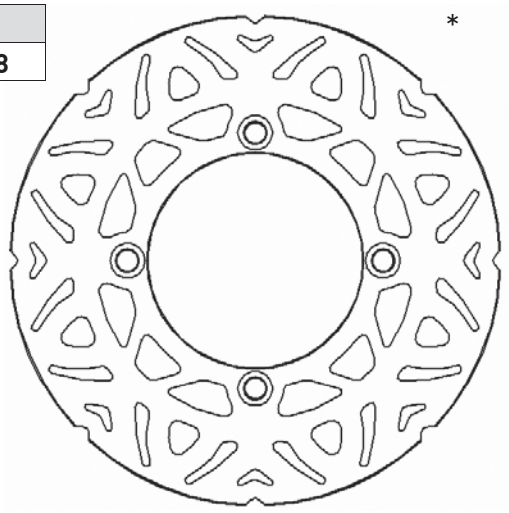

* l'immagine del prodotto è puramente indicativa
picture for illustrative purposes only

CODICE Reference	Ø ESTERNO Outer	Ø INTERNO Inner	SPESSORE Thickness	NR FORI No. holes	INTERASSE FORI Bolt patterns	Ø FORI Holes	CAMPANATURA Total height
DK058	240	105	4	4	125	10,5	0

CROSS REFERENCE		
ACCOSSATO	BREMBO	BRAKING
DK058	68B40775	RF8114

CODICE OEM	
HONDA	/
PEUGEOT	755162

DK058					
MODELLO Model	CC	DA From	A To	ANT. Front	POST. Rear
HONDA					
PANTHEON	125	1998	2002	X	
PANTHEON-FES	125	2003	2007	X	
S-WING/ABS	125	2007	2011	X	
SH-ED	125	2009	→	X	
SH-GT-ABS	125	2012	→	X	
PANTHEON	150	1998	2002	X	
PANTHEON-FES	150	2003	2007	X	
S-WING	150	2007	→	X	
SH-ED	150	2009	→	X	
SH-GT-ABS	150	2012	→	X	
FORESIGHT	250	1997	1999	X	
FORESIGHT	250	2000	2007	X	
FORZA	250	2000	2004	X	
FORZA-X/XE	250	1995	2007	X	
JAZZ	250	2000	2004	X	
PEUGEOT					
SV			250	2002	2007

DK
DK059

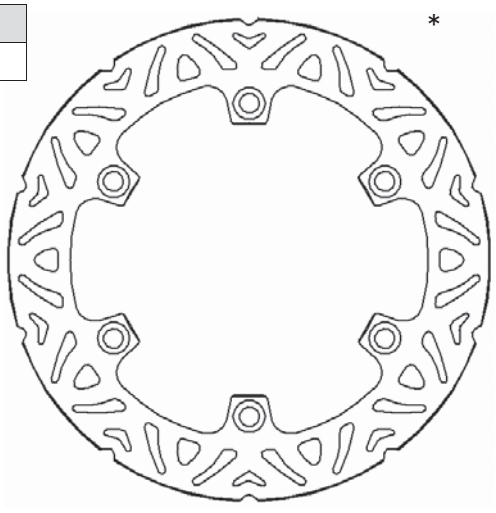

* l'immagine del prodotto è puramente indicativa
picture for illustrative purposes only

CODICE Reference	Ø ESTERNO Outer	Ø INTERNO Inner	SPESSORE Thickness	NR FORI No. holes	INTERASSE FORI Bolt patterns	Ø FORI Holes	CAMPANATURA Total height
DK059	256	144	5	6	166	10,5	0

CROSS REFERENCE		
ACCOSSATO	BREMBO	BRAKING
DK059	68B407A6	HO21FI

CODICE OEM	
HONDA	/

DK059					
MODELLO Model	CC	DA From	A To	ANT. Front	POST. Rear
HONDA					
FORZA-ABS	125	2015	→	X	
FORZA-X/XE	250	2008	→	X	
FORZA-ABS	300	2014	→	X	
FORZA-NSS	300	2012	→	X	
SH-30-ANNI	300	2015	→	X	X
SH-ABS	300	2006	2015	X	X
SH-I	300	2006	2015	X	X
NSR	400	1985	1988	X	
SILVER-WING	400	2006	2008	X	
VF-F-F2	500	1983	1987	X	
SILVER-WING	600	2000	2010	X	
VFR-F	750	1985	1987		X
VFR-F	750	1988	1989		X
CBR-F	1000	1993	1997		X
XL-L-VARADERO/ABS	1000	2003	2011		X
CB-X-11	1100	2000	2003		X
CBR-XX	1100	1997	2004		X
CB	1300	2003	2008		X

ACCOSSATO

dischi freno brake rotor

APPLICAZIONI PER CODICE DISCO / applications for rotor code

DK
DK060

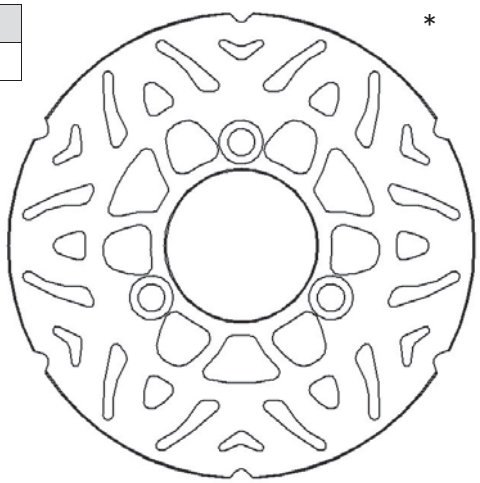

* l'immagine del prodotto è puramente indicativa
picture for illustrative purposes only

CODICE Reference	Ø ESTERNO Outer	Ø INTERNO Inner	SPESSORE Thickness	NR FORI No. holes	INTERASSE FORI Bolt patterns	Ø FORI Holes	CAMPANATURA Total height
DK060	220	100	4	3	120	10,5	0

CROSS REFERENCE		
ACCOSSATO	BREMBO	BRAKING
DK060	68B40737	RF8123

CODICE OEM	
SUZUKI	59221-49F00-000

DK060					
MODELLO Model	CC	DA From	A To	ANT. Front	POST. Rear
SUZUKI					
BURGMAN	125	2001	2006	X	
BURGMAN	150	2001	2006	X	

DK
DK061

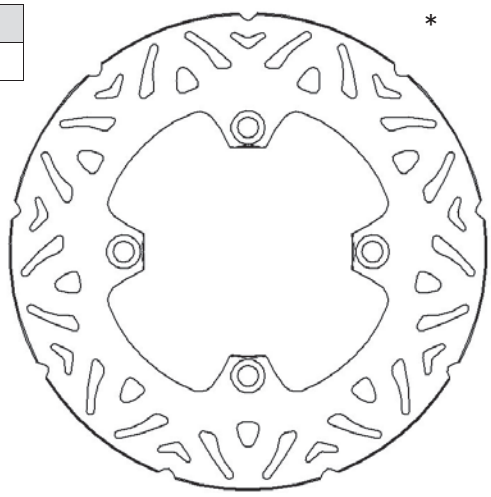

* l'immagine del prodotto è puramente indicativa
picture for illustrative purposes only

CODICE Reference	Ø ESTERNO Outer	Ø INTERNO Inner	SPESSORE Thickness	NR FORI No. holes	INTERASSE FORI Bolt patterns	Ø FORI Holes	CAMPANATURA Total height
DK061	226	58	3,5	3	80	10,5	0

CROSS REFERENCE		
ACCOSSATO	BREMBO	BRAKING
DK061	68B40757	ND

CODICE OEM	
KYMCO	156300

DK061					
MODELLO Model	CC	DA From	A To	ANT. Front	POST. Rear
KYMCO					
PEOPLE	50	1999	2011	X	
PEOPLE	125	1999	2011	X	
PEOPLE	150	1999	2004	X	

dischi freno brake rotor

APPLICAZIONI PER CODICE DISCO / applications for rotor code

DK
DK062

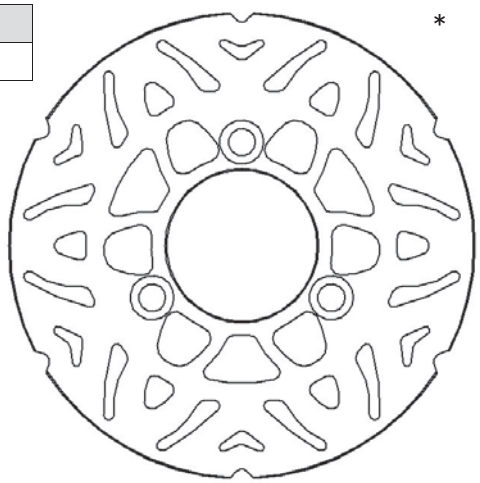

*

DK
DK063

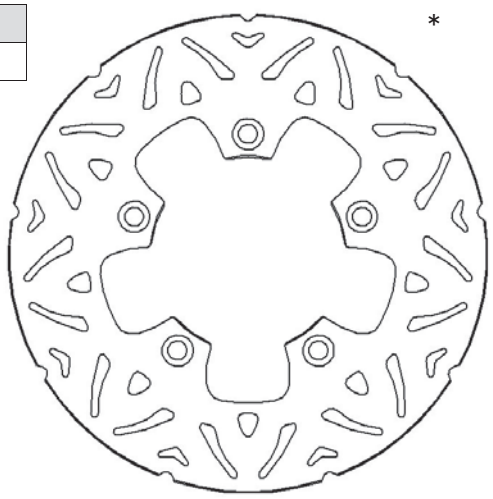

*

*** l'immagine del prodotto è puramente indicativa**
picture for illustrative purposes only

CODICE Reference	Ø ESTERNO Outer	Ø INTERNO Inner	SPESSORE Thickness	NR FORI No. holes	INTERASSE FORI Bolt patterns	Ø FORI Holes	CAMPANATURA Total height
DK062	240	89	4,5	3	110	10,5	0

CROSS REFERENCE		
ACCOSSATO	BREMBO	BRAKING
DK062	68B40770	RF8124

CODICE OEM	
SUZUKI	59211-03H10-13L

DK062					
MODELLO Model	CC	DA From	A To	ANT. Front	POST. Rear
SUZUKI					
BURGMAN-NEW	125	2006	→	X	X
BURGMAN	200	2007	→	X	X

*** l'immagine del prodotto è puramente indicativa**
picture for illustrative purposes only

CODICE Reference	Ø ESTERNO Outer	Ø INTERNO Inner	SPESSORE Thickness	NR FORI No. holes	INTERASSE FORI Bolt patterns	Ø FORI Holes	CAMPANATURA Total height
DK063	260	125	5	5	150	10,5	0

CROSS REFERENCE		
ACCOSSATO	BREMBO	BRAKING
DK063	68B40794	ND

CODICE OEM	
KYMCO	143120

DK063					
MODELLO Model	CC	DA From	A To	ANT. Front	POST. Rear
KYMCO					
PEOPLE-GTI	125	2010	→	X	X
PEOPLE-GTI	200	2010	→	X	X
PEOPLE-GTI	300	2010	→	X	X
PEOPLE-GTI-ABS	300	2014	→	X	X

ACCOSSATO

dischi freno brake rotor

APPLICAZIONI PER CODICE DISCO / applications for rotor code

DK
DK064

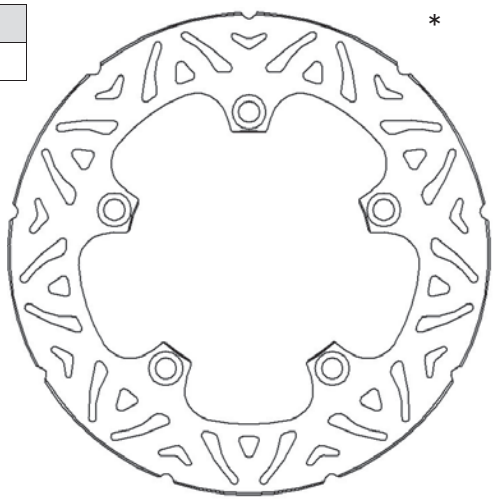

* l'immagine del prodotto è puramente indicativa
picture for illustrative purposes only

CODICE Reference	Ø ESTERNO Outer	Ø INTERNO Inner	SPESSORE Thickness	NR FORI No. holes	INTERASSE FORI Bolt patterns	Ø FORI Holes	CAMPANATURA Total height
DK064	240	105	4	5	120	6,25	0

CROSS REFERENCE		
ACCOSSATO	BREMBO	BRAKING
DK064	68B40798	RF8126

CODICE OEM	
APRILIA	AP8133606
BENELLI	R43810041A0
MALAGUTI	11965000

DK064					
MODELLO Model	CC	DA From	A To	ANT. Front	POST. Rear
APRILIA					
ATLANTIC	125	2003	2011	X	
SCARABEO	125	2004	2007		X
ATLANTIC	200	2003	2004	X	
ATLANTIC	250	2004	2006	X	
ATLANTIC	300	2010	2011	X	
BENELLI					
VELVET	250	1999	→	X	
VELVET-TOURING	250	2001	→	X	
VELVET	400	2003	→	X	
MALAGUTI					
PASSWORD	250	2005	→		X

DK
DK065



* l'immagine del prodotto è puramente indicativa
picture for illustrative purposes only

CODICE Reference	Ø ESTERNO Outer	Ø INTERNO Inner	SPESSORE Thickness	NR FORI No. holes	INTERASSE FORI Bolt patterns	Ø FORI Holes	CAMPANATURA Total height
DK065	260	121	4,5	5	142	10,5	0

CROSS REFERENCE		
ACCOSSATO	BREMBO	BRAKING
DK065	68B407B4	SZ32FI

CODICE OEM	
SUZUKI	59221-14G00-000

DK065					
MODELLO Model	CC	DA From	A To	ANT. Front	POST. Rear
SUZUKI					
BURGMAN	250	2003	2006	X	
BURGMAN	250	2007	2008	X	
BURGMAN	400	2003	2005	X	
BURGMAN	400	2006	→	X	
BURGMAN-ABS	400	2011	→	X	
BURGMAN-ABS	650	2004	2012	X	

dischi freno brake rotor

APPLICAZIONI PER CODICE DISCO / applications for rotor code

DK
DK066

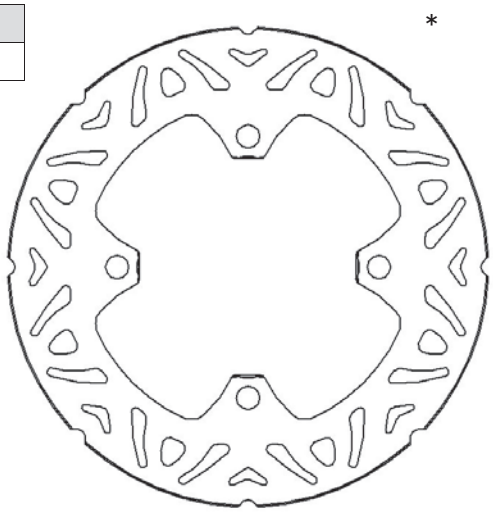

* l'immagine del prodotto è puramente indicativa
picture for illustrative purposes only

CODICE Reference	Ø ESTERNO Outer	Ø INTERNO Inner	SPESSORE Thickness	NR FORI No. holes	INTERASSE FORI Bolt patterns	Ø FORI Holes	CAMPANATURA Total height
DK066	276	144	4	4	166	10,5	0

CROSS REFERENCE		
ACCOSSATO	BREMBO	BRAKING
DK066	68B407C7	ND

CODICE OEM	
HONDA	/

DK066					
MODELLO Model	CC	DA From	A To	ANT. Front	POST. Rear
HONDA					
XRV-AFRICA-TWIN			750	1990	2002

DK
DK067

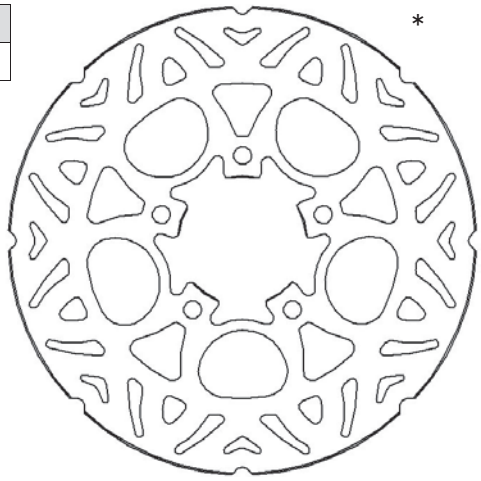

* l'immagine del prodotto è puramente indicativa
picture for illustrative purposes only

CODICE Reference	Ø ESTERNO Outer	Ø INTERNO Inner	SPESSORE Thickness	NR FORI No. holes	INTERASSE FORI Bolt patterns	Ø FORI Holes	CAMPANATURA Total height
DK067	226	60	4	5	90	10,5	0

CROSS REFERENCE		
ACCOSSATO	BREMBO	BRAKING
DK067	68B407J4	ND

CODICE OEM	
HONDA	/

DK067					
MODELLO Model	CC	DA From	A To	ANT. Front	POST. Rear
PEUGEOT					
TWEET	50	2011	→	X	
TWEET-RS	50	2013	→	X	X
TWEET	125	2011	→	X	X
TWEET-EVO	125	2015	→	X	X
TWEET-RS	125	2013	→	X	X
TWEET	150	2011	→	X	X
TWEET-EVO	150	2015	→	X	X
TWEET-RS	150	2013	→	X	X

ACCOSSATO

dischi freno brake rotor

APPLICAZIONI PER CODICE DISCO / applications for rotor code

DK
DK068

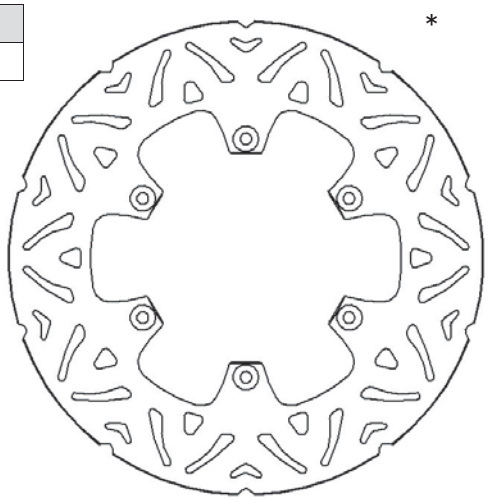

* l'immagine del prodotto è puramente indicativa
picture for illustrative purposes only

CODICE Reference	Ø ESTERNO Outer	Ø INTERNO Inner	SPESSORE Thickness	NR FORI No. holes	INTERASSE FORI Bolt patterns	Ø FORI Holes	CAMPANATURA Total height
DK068	310	144	5	6	166	10,5	0

CROSS REFERENCE		
ACCOSSATO	BREMBO	BRAKING
DK068	68B407K2	ND

CODICE OEM	
TRIUMPH	/

DK068					
MODELLO Model	CC	DA From	A To	ANT. Front	POST. Rear
TRIUMPH					
BONNEVILLE-T100	865	2005	→	X	

DK
DK069

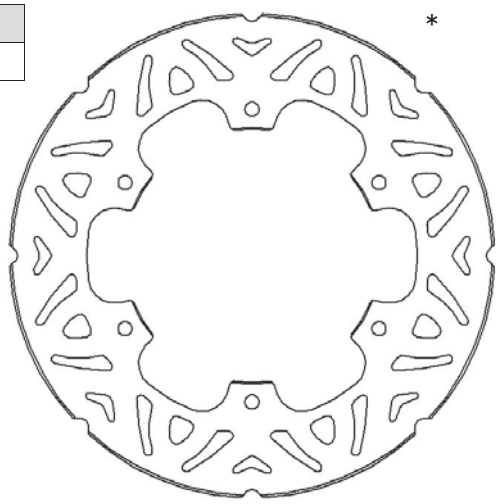

* l'immagine del prodotto è puramente indicativa
picture for illustrative purposes only

CODICE Reference	Ø ESTERNO Outer	Ø INTERNO Inner	SPESSORE Thickness	NR FORI No. holes	INTERASSE FORI Bolt patterns	Ø FORI Holes	CAMPANATURA Total height
DK069	220	105	4	6	120	6,5	0

CROSS REFERENCE		
ACCOSSATO	BREMBO	BRAKING
DK069	68B407L5	ND

CODICE OEM	
PIAGGIO	669188

DK069					
MODELLO Model	CC	DA From	A To	ANT. Front	POST. Rear
PIAGGIO					
VESPA-946	125	2014	→	X	

dischi freno brake rotor

APPLICAZIONI PER CODICE DISCO / applications for rotor code

DK
DK070

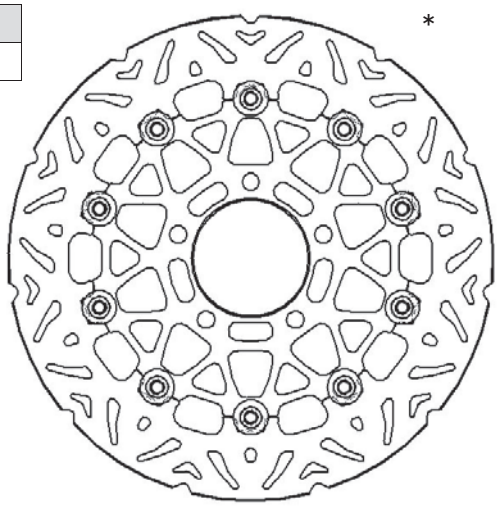

* **l'immagine del prodotto è puramente indicativa**
picture for illustrative purposes only

COLORI FASCIA FRENANTE / braking strip colours		
NERO	black	N

CODICE Reference	Ø ESTERNO Outer	Ø INTERNO Inner	SPESSORE Thickness	NR FORI No. holes	INTERASSE FORI Bolt patterns	Ø FORI Holes	CAMPANATURA Total height
DK070	280	80,5	5	5	100	10,5	/

CROSS REFERENCE		
ACCOSSATO	BREMBO	BRAKING
DK070	78B40815	ND

CODICE OEM	
KAWASAKI	410801529488

DK070					
MODELLO Model	CC	DA From	A To	ANT. Front	POST. Rear
KAWASAKI					
ZX-6RR	600	2003	2004	X	
ZX-6R	636	2003	2004	X	

DK
DK071

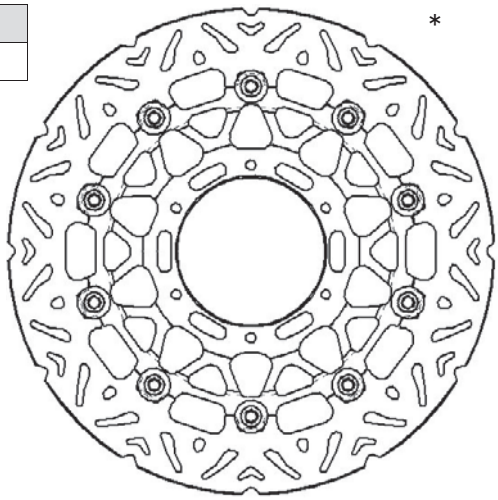

* **l'immagine del prodotto è puramente indicativa**
picture for illustrative purposes only

COLORI FASCIA FRENANTE / braking strip colours		
NERO	black	N

CODICE Reference	Ø ESTERNO Outer	Ø INTERNO Inner	SPESSORE Thickness	NR FORI No. holes	INTERASSE FORI Bolt patterns	Ø FORI Holes	CAMPANATURA Total height
DK071	267	132	4	6	150	8,5	0

CROSS REFERENCE		
ACCOSSATO	BREMBO	BRAKING
DK071	78B40818	RL8001

CODICE OEM	
HONDA	/

DK071					
MODELLO Model	CC	DA From	A To	ANT. Front	POST. Rear
YAMAHA					
T-MAX	500	2008	2011	X	
T-MAX-ABS	500	2008	2011	X	

ACCOSSATO

dischi freno brake rotor

APPLICAZIONI PER CODICE DISCO / applications for rotor code

DK
DK072

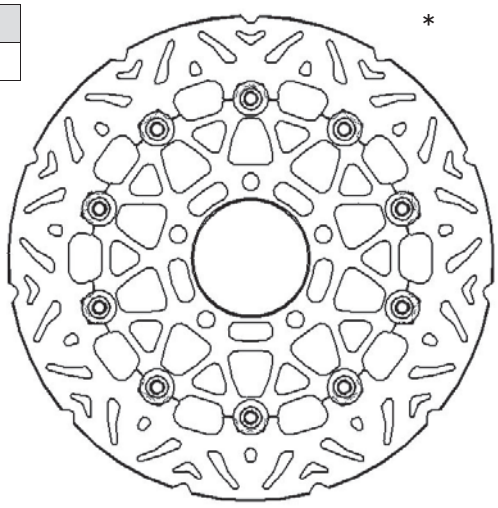

* **l'immagine del prodotto è puramente indicativa**
picture for illustrative purposes only

COLORI FASCIA FRENANTE / braking strip colours		
NERO	black	N

CODICE Reference	Ø ESTERNO Outer	Ø INTERNO Inner	SPESSORE Thickness	NR FORI No. holes	INTERASSE FORI Bolt patterns	Ø FORI Holes	CAMPANATURA Total height
DK072	260	58	4	5	80	10,5	/

CROSS REFERENCE		
ACCOSSATO	BREMBO	BRAKING
DK072	78B40819	ND

CODICE OEM	
KAWASAKI	41080Y007
KYMCO	145090

DK072					
MODELLO Model	CC	DA From	A To	ANT. Front	POST. Rear
KAWASAKI					
J	300	2014	→	X	
KYMCO					
DOWNTOWN	125	2009	2014	X	
DOWNTOWN-I	125	2015	→	X	
K-XCTI	125	2013	→	X	
DOWNTOWN-I	200	2010	2014	X	
DOWNTOWN-I	300	2009	2014	X	
DOWNTOWN-I-ABS	300	2010	2014	X	
K-XCTI	300	2012	→	X	
SUPER-DINK	300	2009	2012	X	
DOWNTOWN-I-ABS	350	2015	→	X	

DK
DK073

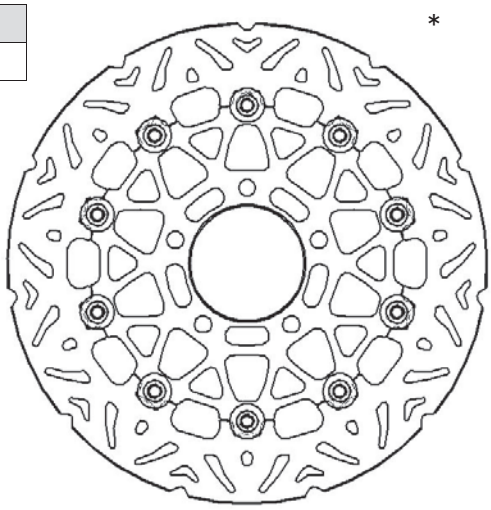

* **l'immagine del prodotto è puramente indicativa**
picture for illustrative purposes only

COLORI FASCIA FRENANTE / braking strip colours		
NERO	black	N

CODICE Reference	Ø ESTERNO Outer	Ø INTERNO Inner	SPESSORE Thickness	NR FORI No. holes	INTERASSE FORI Bolt patterns	Ø FORI Holes	CAMPANATURA Total height
DK073	290	64	5	5	86	10,5	19,5

CROSS REFERENCE		
ACCOSSATO	BREMBO	BRAKING
DK073	78B40820	STX125

CODICE OEM	
SUZUKI	59210-08F11-000

DK073					
MODELLO Model	CC	DA From	A To	ANT. Front	POST. Rear
SUZUKI					
GSF-BANDIT	600	1995	2004	X	
GSX-F	600	1989	1997	X	
GSX-F	600	1998	2003	X	
RF-R	600	1993	1997	X	
SV	650	1999	2002	X	
SV-S	650	1999	2002	X	
GSX-F	750	1998	2003	X	
GSX-F-FL-SLINGSHOT	750	1989	1992	X	

dischi freno brake rotor

APPLICAZIONI PER CODICE DISCO / applications for rotor code

DK
DK074

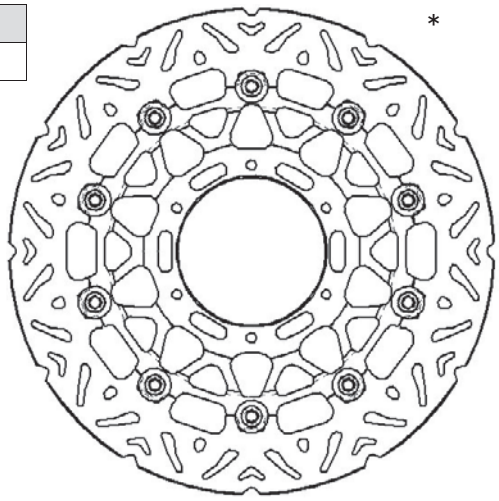

* **l'immagine del prodotto è puramente indicativa**
picture for illustrative purposes only

COLORI FASCIA FRENANTE / braking strip colours		
NERO	black	N

CODICE Reference	Ø ESTERNO Outer	Ø INTERNO Inner	SPESSORE Thickness	NR FORI No. holes	INTERASSE FORI Bolt patterns	Ø FORI Holes	CAMPANATURA Total height
DK074	296	94	5	6	110	6,5	12,5

CROSS REFERENCE		
ACCOSSATO	BREMBO	BRAKING
DK074	78B40823	STX40

CODICE OEM	
HONDA	/

DK074					
MODELLO Model	CC	DA From	A To	ANT. Front	POST. Rear
HONDA					
CBR-F	600	2001	2007	X	
CBR-F-SPORT	600	2001	2002	X	
CBR-F4	600	2001	2006	X	
HORNET	900	2002	2006	X	

DK
DK075

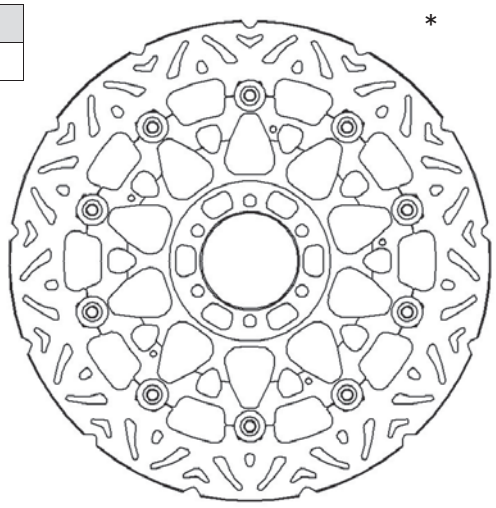

* **l'immagine del prodotto è puramente indicativa**
picture for illustrative purposes only

COLORI FASCIA FRENANTE / braking strip colours		
NERO	black	N

CODICE Reference	Ø ESTERNO Outer	Ø INTERNO Inner	SPESSORE Thickness	NR FORI No. holes	INTERASSE FORI Bolt patterns	Ø FORI Holes	CAMPANATURA Total height
DK075	296	58	5	6	74	6,5	22,7

CROSS REFERENCE		
ACCOSSATO	BREMBO	BRAKING
DK075	78B40826	STX43

CODICE OEM	
HONDA	/

DK075					
MODELLO Model	CC	DA From	A To	ANT. Front	POST. Rear
HONDA					
HORNET/S	600	2000	2006	X	

ACCOSSATO

dischi freno brake rotor

APPLICAZIONI PER CODICE DISCO / applications for rotor code

DK
DK076

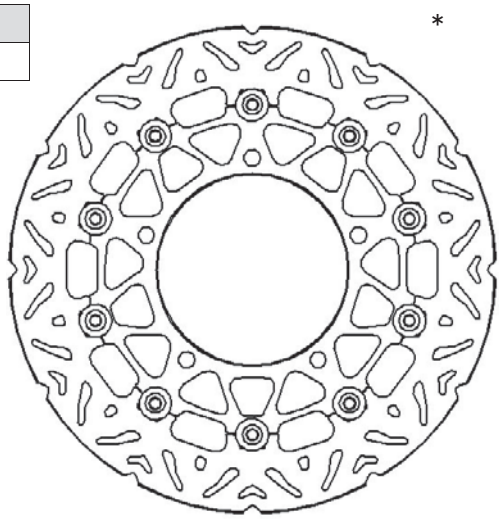

* **l'immagine del prodotto è puramente indicativa**
picture for illustrative purposes only

COLORI FASCIA FRENANTE / braking strip colours		
NERO	black	N

CODICE Reference	Ø ESTERNO Outer	Ø INTERNO Inner	SPESSORE Thickness	NR FORI No. holes	INTERASSE FORI Bolt patterns	Ø FORI Holes	CAMPANATURA Total height
DK076	267	132	4	5	150	8,5	/

CROSS REFERENCE		
ACCOSSATO	BREMBO	BRAKING
DK076	78B40835	ND

CODICE OEM	
YAMAHA	1SD2517G0000

DK076					
MODELLO Model	CC	DA From	A To	ANT. Front	POST. Rear
YAMAHA					
X-MAX	400	2014	→	X	
X-MAX-ABS	400	2014	→	X	

DK
DK077

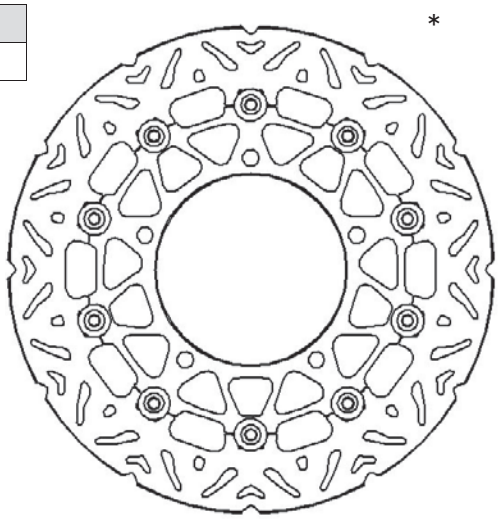

* **l'immagine del prodotto è puramente indicativa**
picture for illustrative purposes only

COLORI FASCIA FRENANTE / braking strip colours		
NERO	black	N

CODICE Reference	Ø ESTERNO Outer	Ø INTERNO Inner	SPESSORE Thickness	NR FORI No. holes	INTERASSE FORI Bolt patterns	Ø FORI Holes	CAMPANATURA Total height
DK077	298	132	4,5	5	150	8,5	/

CROSS REFERENCE		
ACCOSSATO	BREMBO	BRAKING
DK077	78B40849	ND

CODICE OEM	
YAMAHA	1WDF581U0000

DK077					
MODELLO Model	CC	DA From	A To	ANT. Front	POST. Rear
YAMAHA					
YZF-R3	321	2015	→	X	

dischi freno brake rotor

APPLICAZIONI PER CODICE DISCO / applications for rotor code

DK
DK078

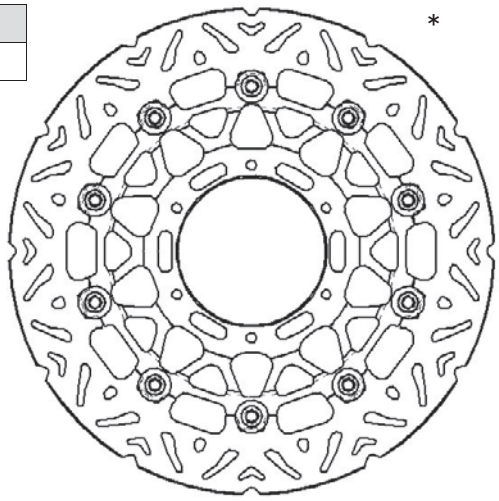

* **l'immagine del prodotto è puramente indicativa**
picture for illustrative purposes only

COLORI FASCIA FRENANTE / braking strip colours		
NERO	black	N

CODICE Reference	Ø ESTERNO Outer	Ø INTERNO Inner	SPESSORE Thickness	NR FORI No. holes	INTERASSE FORI Bolt patterns	Ø FORI Holes	CAMPANATURA Total height
DK078	330	94	5	6	110	6,5	/

CROSS REFERENCE		
ACCOSSATO	BREMBO	BRAKING
DK078	78B40895	ND

CODICE OEM	
HONDA	/

DK078					
MODELLO Model	CC	DA From	A To	ANT. Front	POST. Rear
HONDA					
CBR-RR	900	2000	2003	X	

DK
DK079

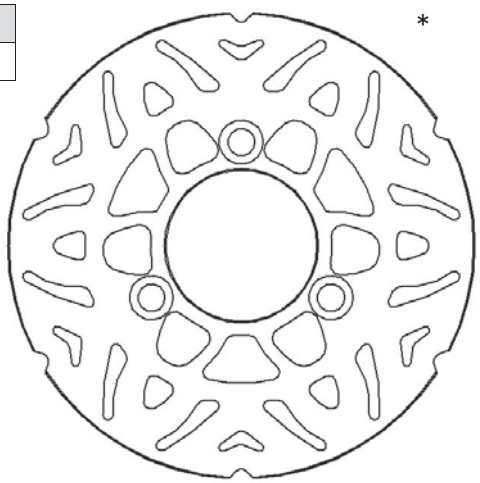

* **l'immagine del prodotto è puramente indicativa**
picture for illustrative purposes only

CODICE Reference	Ø ESTERNO Outer	Ø INTERNO Inner	SPESSORE Thickness	NR FORI No. holes	INTERASSE FORI Bolt patterns	Ø FORI Holes	CAMPANATURA Total height
DK079	210	60	5	3	90	10,5	0

CROSS REFERENCE		
ACCOSSATO	BREMBO	BRAKING
DK079	68B40725	ND

CODICE OEM	
SUZUKI	69210-14G00-000

DK079					
MODELLO Model	CC	DA From	A To	ANT. Front	POST. Rear
SUZUKI					
BURGMAN	250	2003	2006		X
BURGMAN	400	2003	2005		X

ACCOSSATO

dischi freno brake rotor

APPLICAZIONI PER CODICE DISCO / applications for rotor code

DK
DK080

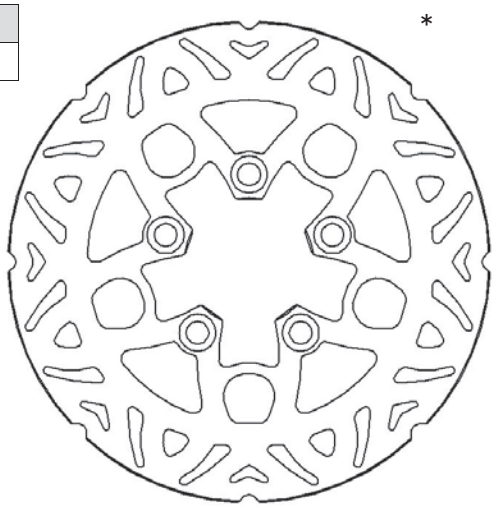

* l'immagine del prodotto è puramente indicativa
picture for illustrative purposes only

CODICE Reference	Ø ESTERNO Outer	Ø INTERNO Inner	SPESSORE Thickness	NR FORI No. holes	INTERASSE FORI Bolt patterns	Ø FORI Holes	CAMPANATURA Total height
DK080	210	90	5	5	110	10,5	0

CROSS REFERENCE		
ACCOSSATO	BREMBO	BRAKING
DK080	68B40726	ND

CODICE OEM	
SUZUKI	69211-05H00-000

DK080					
MODELLO Model	CC	DA From	A To	ANT. Front	POST. Rear
SUZUKI					
BURGMAN	250	2007	2008		
BURGMAN	400	2006	→		
BURGMAN-ABS	400	2011	→		

DK
DK081

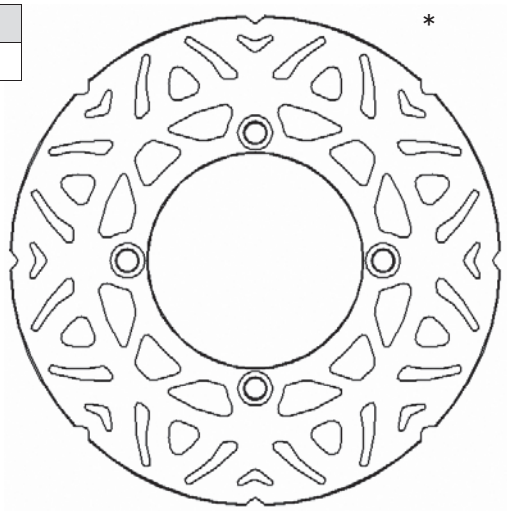

* l'immagine del prodotto è puramente indicativa
picture for illustrative purposes only

CODICE Reference	Ø ESTERNO Outer	Ø INTERNO Inner	SPESSORE Thickness	NR FORI No. holes	INTERASSE FORI Bolt patterns	Ø FORI Holes	CAMPANATURA Total height
DK081	220	64,5	4	4	86	10,5	0

CROSS REFERENCE		
ACCOSSATO	BREMBO	BRAKING
DK081	68B40741	ND

CODICE OEM	
SUZUKI	69211-49F00-000

DK081					
MODELLO Model	CC	DA From	A To	ANT. Front	POST. Rear
SUZUKI					
BURGMAN	125	2001	2006		X
BURGMAN	150	2001	2006		X

dischi freno brake rotor

APPLICAZIONI PER CODICE DISCO / applications for rotor code

DK
DK082

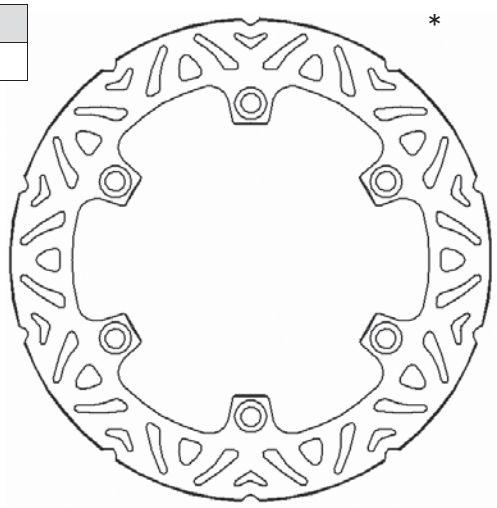

* l'immagine del prodotto è puramente indicativa
picture for illustrative purposes only

CODICE Reference	Ø ESTERNO Outer	Ø INTERNO Inner	SPESSORE Thickness	NR FORI No. holes	INTERASSE FORI Bolt patterns	Ø FORI Holes	CAMPANATURA Total height
DK082	245	115	5	6	133	6,25	0

CROSS REFERENCE		
ACCOSSATO	BREMBO	BRAKING
DK082	68B407C9	ND

CODICE OEM	
ITALJET	/
YAMAHA	3LD2582W0100

DK082					
MODELLO Model	CC	DA From	A To	ANT. Front	POST. Rear
ITALJET					
JUPITER	250	2000	→	X	
YAMAHA					
XTZ-SUPERTENERE	750	1989	→		X

DK
DK083

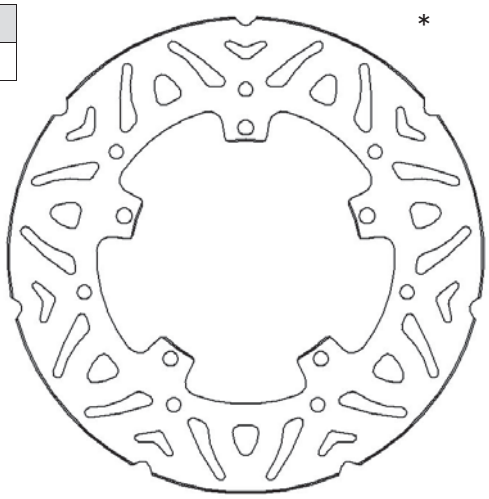

* l'immagine del prodotto è puramente indicativa
picture for illustrative purposes only

CODICE Reference	Ø ESTERNO Outer	Ø INTERNO Inner	SPESSORE Thickness	NR FORI No. holes	INTERASSE FORI Bolt patterns	Ø FORI Holes	CAMPANATURA Total height
DK083	200	90	4	5	110	10,5	0

CROSS REFERENCE		
ACCOSSATO	BREMBO	BRAKING
DK083	68B407D8	RF8514

CODICE OEM	
KYMCO	143081

DK083					
MODELLO Model	CC	DA From	A To	ANT. Front	POST. Rear
KYMCO					
LIKE	125	2009	→		X
PEOPLE-ONE-125DD	125	2014	→		X
LIKE-200-I	200	2009	→		X
G-DINK	300	2012	→		X

ACCOSSATO

dischi freno brake rotor

APPLICAZIONI PER CODICE DISCO / applications for rotor code

DK
DK084

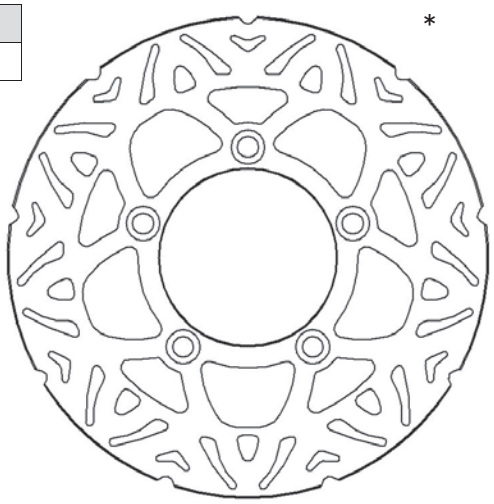

* l'immagine del prodotto è puramente indicativa
picture for illustrative purposes only

CODICE Reference	Ø ESTERNO Outer	Ø INTERNO Inner	SPESSORE Thickness	NR FORI No. holes	INTERASSE FORI Bolt patterns	Ø FORI Holes	CAMPANATURA Total height
DK084	240	90	5	5	110	8,6	0

CROSS REFERENCE		
ACCOSSATO	BREMBO	BRAKING
DK084	68B407K4	ND

CODICE OEM	
KAWASAKI	41080Y006

DK084					
MODELLO Model	CC	DA From	A To	ANT. Front	POST. Rear
KAWASAKI					
J	300	2014	→		X

DK
DK085

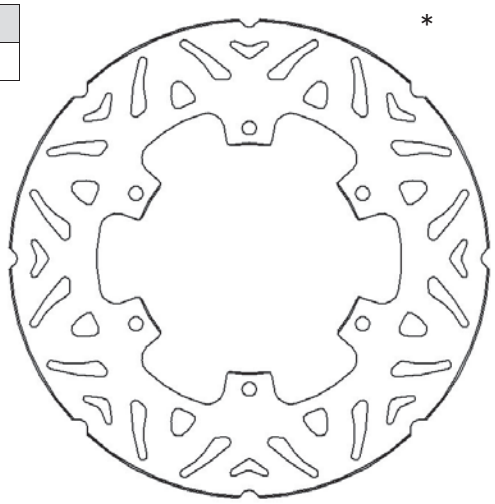

* l'immagine del prodotto è puramente indicativa
picture for illustrative purposes only

CODICE Reference	Ø ESTERNO Outer	Ø INTERNO Inner	SPESSORE Thickness	NR FORI No. holes	INTERASSE FORI Bolt patterns	Ø FORI Holes	CAMPANATURA Total height
DK085	220	105	4	6	120	6,5	0

CROSS REFERENCE		
ACCOSSATO	BREMBO	BRAKING
DK085	68B407L6	ND

CODICE OEM	
PIAGGIO	668716

DK085					
MODELLO Model	CC	DA From	A To	ANT. Front	POST. Rear
PIAGGIO					
VESPA-946	125	2014	→		X

dischi freno brake rotor

APPLICAZIONI PER CODICE DISCO / applications for rotor code

DK
DK086

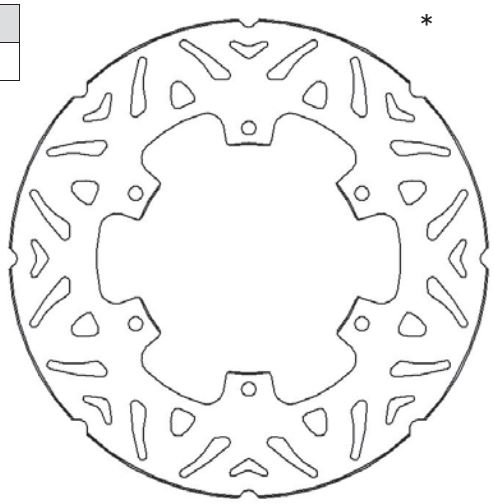

* l'immagine del prodotto è puramente indicativa
picture for illustrative purposes only

CODICE Reference	Ø ESTERNO Outer	Ø INTERNO Inner	SPESSORE Thickness	NR FORI No. holes	INTERASSE FORI Bolt patterns	Ø FORI Holes	CAMPANATURA Total height
DK086	220	115	4,5	6	133	8,5	0

CROSS REFERENCE		
ACCOSSATO	BREMBO	BRAKING
DK086	68B407M5	ND

CODICE OEM	
YAMAHA	2C8F582W0000

DK086					
MODELLO Model	CC	DA From	A To	ANT. Front	POST. Rear
YAMAHA					
DT-X-SUPERMOTARD	125	2005	2006		X
WR-X	125	2009	2013		X
DT-RE	125	2005	2006	X	

DK
DK087

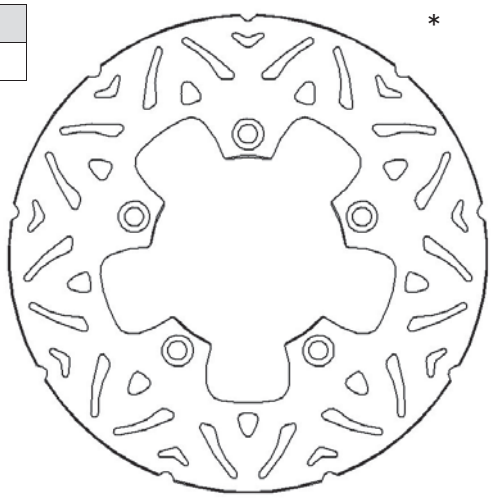

* l'immagine del prodotto è puramente indicativa
picture for illustrative purposes only

CODICE Reference	Ø ESTERNO Outer	Ø INTERNO Inner	SPESSORE Thickness	NR FORI No. holes	INTERASSE FORI Bolt patterns	Ø FORI Holes	CAMPANATURA Total height
DK087	240	89	5	5	110	10,5	0

CROSS REFERENCE		
ACCOSSATO	BREMBO	BRAKING
DK087	68B407N5	ND

CODICE OEM	
KYMCO	143088

DK087					
MODELLO Model	CC	DA From	A To	ANT. Front	POST. Rear
KYMCO					
DOWNTOWN-I-ABS	300	2010	2014		X

ACCOSSATO

dischi freno brake rotor

APPLICAZIONI PER CODICE DISCO / applications for rotor code

DK
DK088

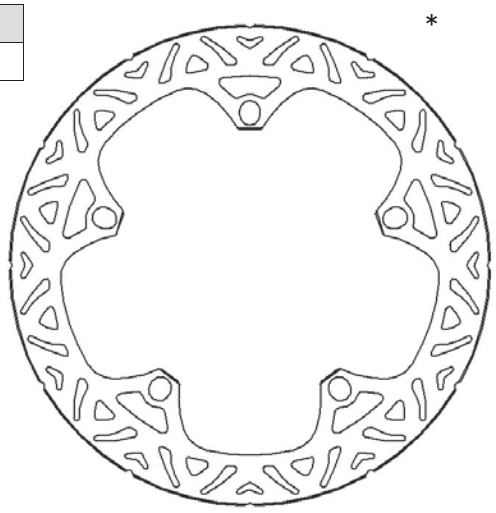

*

*** l'immagine del prodotto è puramente indicativa**
picture for illustrative purposes only

CODICE Reference	Ø ESTERNO Outer	Ø INTERNO Inner	SPESSORE Thickness	NR FORI No. holes	INTERASSE FORI Bolt patterns	Ø FORI Holes	CAMPANATURA Total height
DK088	305	181	5	5	203	14	0

CROSS REFERENCE		
ACCOSSATO	BREMBO	BRAKING
DK088	168B407D6	ND

CODICE OEM	
BMW	/

DK088					
MODELLO Model	CC	DA From	A To	ANT. Front	POST. Rear
BMW					
R-1200-GS	1200	2008	2012	X	
R-1200-GS	1200	2013	→	X	
R-1200-GS-ABS	1200	2008	2012	X	
R-1200-GS-ABS	1200	2013	→	X	
R-1200-GS-ADVENTURE	1200	2008	2012	X	
R-1200-GS-ADVENTURE	1200	2014	→	X	
R-1200-R-DARK-WHITE	1200	2014	→	X	

DK	
DK089	

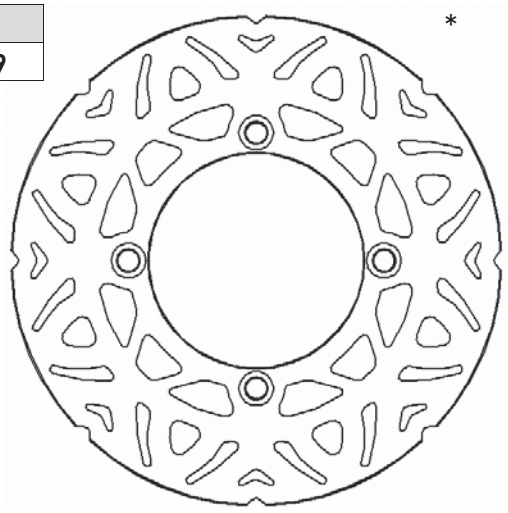

*

*** l'immagine del prodotto è puramente indicativa**
picture for illustrative purposes only

CODICE Reference	Ø ESTERNO Outer	Ø INTERNO Inner	SPESSORE Thickness	NR FORI No. holes	INTERASSE FORI Bolt patterns	Ø FORI Holes	CAMPANATURA Total height
DK089	240	118	4	4	134	6,5	0

CROSS REFERENCE		
ACCOSSATO	BREMBO	BRAKING
DK089	68B40769	HO09FI

CODICE OEM	
HONDA	/

DK089					
MODELLO Model	CC	DA From	A To	ANT. Front	POST. Rear
HONDA					
CRM	50	1997	2002	X	
AX-1	75	1989	→	X	
CRM	75	1995	1999	X	
CR-E	125	1988	1991	X	
CR-E	125	1992	1994	X	
CR-R	125	1988	1991	X	
CR-R	125	1992	1994	X	
CRM	125	1998	→	X	
XLR-R	125	1998	2000	X	
CRF-F	150	2003	2006	X	
CRF-TRIAL	230	2004	2006	X	
SL	230	1998	→	X	
CR-E	250	1988	1991	X	
CR-E	250	1992	1994	X	
CR-R	250	1988	1991	X	
CR-R	250	1992	1994	X	
CRM-R	250	1998	→	X	
NX	250	1988	→	X	
XLR-BAJA	250	1988	1991	X	
XR-R	250	1991	2004	X	
XR-R	400	1995	2005	X	
CR	500	1988	1991	X	
CR	500	1992	1994	X	
XL-R	600	1983	1987	X	
XR-R	600	1988	1999	X	
XR-R-DAKAR	600	1999	→	X	
XR-R	650	2000	2008	X	

dischi freno brake rotor

APPLICAZIONI PER CODICE DISCO / applications for rotor code

DK
DK090

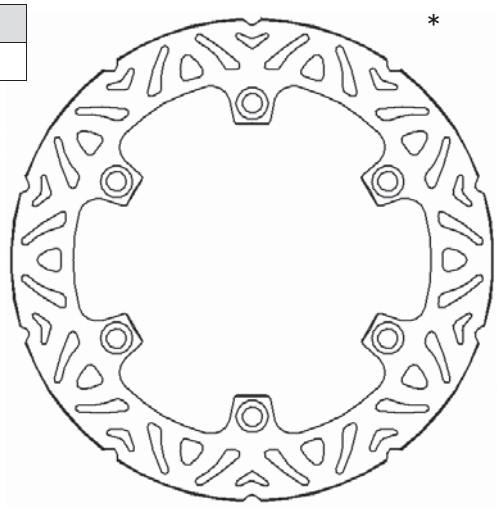

* l'immagine del prodotto è puramente indicativa
picture for illustrative purposes only

CODICE Reference	Ø ESTERNO Outer	Ø INTERNO Inner	SPESSORE Thickness	NR FORI No. holes	INTERASSE FORI Bolt patterns	Ø FORI Holes	CAMPANATURA Total height
DK090	240	105	4	6	120	6,5	0

CROSS REFERENCE		
ACCOSSATO	BREMBO	BRAKING
DK090	68B40774	RF8127

CODICE OEM	
BMW	/
GILERA	649226
PIAGGIO	649226

DK090					
MODELLO Model	CC	DA From	A To	ANT. Front	POST. Rear
BMW					
G-650-XCHALLENGE	650	2007	2009		X
G-650-XCOUNTRY	650	2007	2009		X

DK090					
MODELLO Model	CC	DA From	A To	ANT. Front	POST. Rear
GILERA					
RUNNER-ST	125	2008	→	X	
RUNNER-VX-4T- (GRIMECA CALIPER)	125	2005	2007	X	
RUNNER-VX-4T- (HENGTONG CALIPER)	125	2005	2007	X	
RUNNER-VXR	200	2005	2008	X	
FUOCO-I.E.	500	2007	2011	X	
PIAGGIO					
MP3	125	2007	2008	X	
MP3-HYBRID	125	2009	2010	X	
MP3-IE	125	2008	2009	X	
MP3	250	2006	2008	X	
MP3-LT	250	2009	→	X	
MP3-MIC	250	2008	2009	X	
MP3-LT-BUSINESS-I.E.	300	2013	→	X	
MP3-LT-HYBRID-I.E.	300	2000	→	X	
MP3-LT-I.E.	300	2010	2011	X	
MP3-LT-SPORT-I.E.	300	2009	2010	X	
MP3-MIC-I.E.	300	2010	→	X	
MP3-TOURING	300	2011	→	X	
MP3-YOURBAN	300	2011	2014	X	
MP3-YOURBAN-ie	300	2015	→	X	
MP3-YOURBAN-LT	300	2013	→	X	
MP3-YOURBAN-SPORT-I.E.	300	2013	→	X	
MP3-YOURBAN-SPORT-LT-I.E.	300	2013	→	X	
MP3	400	2007	2008	X	
MP3-LT	400	2009	2010	X	
MP3-LT-I.E.	400	2009	2010	X	
MP3-LT-SPORT	400	2009	2010	X	
MP3-LT-SPORT-I.E.	400	2009	2010	X	
MP3-MIC	400	2008	2009	X	
MP3-T-BUSINESS-I.E.	500	2013	→	X	
MP3-PORT	500	2011	→	X	
MP3-TOURING-IE	500	2012	→	X	

ACCOSSATO

dischi freno brake rotor

APPLICAZIONI PER CODICE DISCO / applications for rotor code

DK
DK091

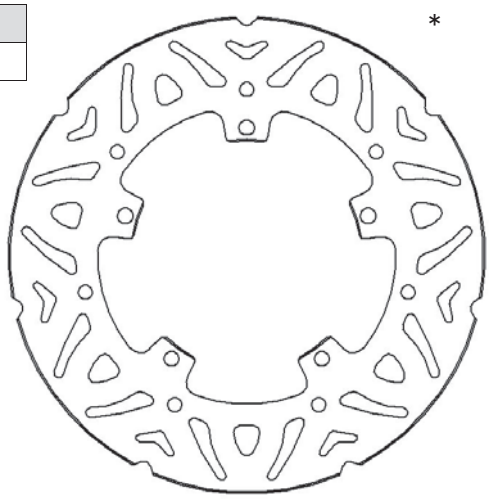

* l'immagine del prodotto è puramente indicativa
picture for illustrative purposes only

CODICE Reference	Ø ESTERNO Outer	Ø INTERNO Inner	SPESSORE Thickness	NR FORI No. holes	INTERASSE FORI Bolt patterns	Ø FORI Holes	CAMPANATURA Total height
DK091	240	125	4	5	140	6,5	0

CROSS REFERENCE		
ACCOSSATO	BREMBO	BRAKING
DK091	68B40776	RF8510

CODICE OEM	
ADIVA	/
APRILIA	AP8133627
GILERA	56484R
ITALJET	/
PIAGGIO	56392R

DK091					
MODELLO Model	CC	DA From	A To	ANT. Front	POST. Rear
ADIVA					
AD 200	250	2006	→		X
APRILIA					
SCARABEO LIGHT	500	2007	→		X
GILERA					
DNA	50	2000	→		X
DNA	125	2001	2003		X
RUNNER	125	1995	2005		X
RUNNER	125	2006	→		X
RUNNER-FX-(GRIMECA CALIPER)	125	1997	2005		X
RUNNER-FX-(HENGTONG CALIPER)	125	1997	2005		X
RUNNER-FX-SP-(GRIMECA CALIPER)	125	1998	2005		X
RUNNER-FX-SP-(HENGTONG CALIPER)	125	1998	2005		X
RUNNER-ST	125	2008	→		X
RUNNER-VX-4T-(GRIMECA CALIPER)	125	2005	2007		X

DK091					
MODELLO Model	CC	DA From	A To	ANT. Front	POST. Rear
RUNNER-VX-4T-(HENGTONG CALIPER)	125	1999	2004		X
TYPHOON-XR	125	1995	→		X
DNA	125	2001	2003	X	
DNA	180	2001	2003	X	
DNA	180	2001	2003		X
RUNNER-FXR	180	1998	2004		X
RUNNER-FXR-SP-(GRIMECA CALIPER)	180	1999	2005		X
RUNNER-FXR-SP-(HENGTONG CALIPER)	180	1999	2005		X
RUNNER-SP	180	1998	→		X
RUNNER-VXR	180	1999	→		X
RUNNER-VXR	180	2000	→		X
RUNNER-SP	200	2001	2002		X
HERCULES	200	2002	→		X
ITALJET					
DRAGSTER	125	1999	2001		X
DRAGSTER	180	1999	2001		X
PIAGGIO					
X7	125	2007	2009		X
X8	125	2004	2006		X
X8-PREMIUM-EURO2	125	2006	2007		X
X8-PREMIUM-EURO3	125	2006	2007		X
X9	125	2001	→		X
X9-EVOLUTION	125	2003	2007		X
X9-EVOLUTION-EURO3	125	2007	→		X
LIBERTY	125	2012	→	X	
X9	125	2001	→	X	
X9-EVOLUTION	125	2003	2007	X	
X9-EVOLUTION-EURO3	125	2007	→	X	
HEXAGON	150	1998	→		X
LIBERTY	150	2012	→	X	
X9	180	2000	2002	X	
X9-AMALFI	180	2000	2003	X	
X9	180	2000	2002		X
X9-AMALFI	180	2000	2003		X
X9	200	2002	2003	X	
X9-AMALFI	200	2001	2002	X	
X9-EVOLUTION	200	2003	2004	X	
X8	200	2005	2007		X
X8-EVO	200	2005	2007		X
X9	200	2002	2003		X
X9-AMALFI	200	2001	2002		X
X9-EVOLUTION	200	2003	2004		X
X9	250	2000	2006	X	
X9-EVOLUTION	250	2004	2006	X	
X8-I.E.	250	2005	2008		X
X9	250	2000	2006		X
X9-EVOLUTION	250	2004	2006		X
X-EVO	400	2007	2011	X	
X8-I.E.	400	2006	2008	X	
BEVERLY-I.E.	400	2006	2007		X
BEVERLY-TOURER-EURO3	400	2008	2010		X
X8-I.E.	400	2006	2008		X

dischi freno brake rotor

APPLICAZIONI PER CODICE DISCO / applications for rotor code

DK
DK092

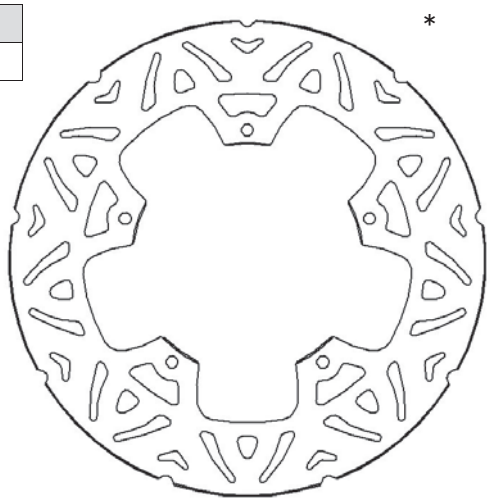

* l'immagine del prodotto è puramente indicativa
picture for illustrative purposes only

CODICE Reference	Ø ESTERNO Outer	Ø INTERNO Inner	SPESSORE Thickness	NR FORI No. holes	INTERASSE FORI Bolt patterns	Ø FORI Holes	CAMPANATURA Total height
DK092	260	125	4	5	140	6,5	0

CROSS REFERENCE		
ACCOSSATO	BREMBO	BRAKING
DK092	68B407B6	PI04FI

CODICE OEM	
ADIVA	/
APRILIA	56393R
GILERA	56393R
PIAGGIO	56393R

DK092					
MODELLO Model	CC	DA From	A To	ANT. Front	POST. Rear
ADIVA					
AD 200	250	2006	→	X	
APRILIA					
SR MAX	125	2010	→	X	
SR MAX	300	2010	→	X	
GILERA					
NEXUS	125	2007	2009	X	
NEXUS-IE	125	2010	→	X	
NEXUS	250	2006	2008	X	
NEXUS	300	2008	→	X	
NEXUS	500	2004	2013	X	
NEXUS-I.E.-SP	500	2006	2008	X	
PIAGGIO					
X-EVO	125	2007	→	X	
X7	125	2007	2009	X	
X7-EURO3	125	2008	2009	X	
X7-EVO-IE-EURO3	125	2009	2010	X	
X8	125	2004	2006	X	
X8-PREMIUM-EURO2	125	2006	2007	X	
X8-PREMIUM-EURO3	125	2006	2007	X	
X8	150	2006	2008	X	
BEVERLY	200	2003	2006	X	X
CARNABY	200	2007	2009	X	X
X8	200	2005	2007	X	
X8-EVO	200	2005	2007	X	
X-EVO	250	2007	2011	X	
X7	250	2008	2009	X	
X8-I.E.	250	2005	2008	X	
CARNABY-CRUISER	300	2009	2012	X	X
X7-EVO-I.E.	300	2009	2011	X	
BEVERLY-I.E.	400	2006	2007	X	
BEVERLY-TOURER-EURO3	400	2008	2010	X	
BEVERLY-CRUISER	500	2007	2012	X	
X9-EVOLUTION	500	2003	2007	X	
X9-EVOLUTION-ABS	500	2006	2007	X	

DK
DK093

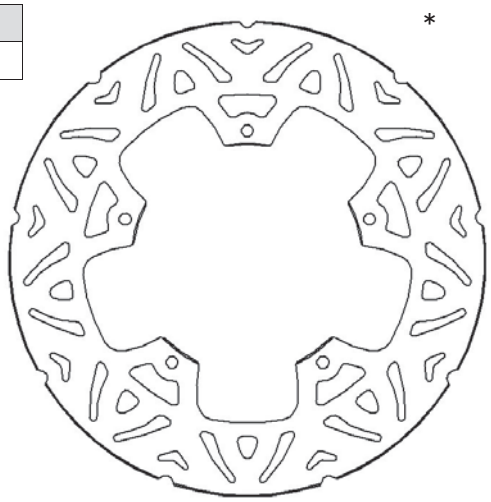

CODICE Reference	Ø ESTERNO Outer	Ø INTERNO Inner	SPESSORE Thickness	NR FORI No. holes	INTERASSE FORI Bolt patterns	Ø FORI Holes	CAMPANATURA Total height
DK093	267	132	4	5	150	8,5	0

CROSS REFERENCE		
ACCOSSATO	BREMBO	BRAKING
DK093	68B407C3	RF8116

CODICE OEM	
YAMAHA	5RU2582T1000

DK093					
MODELLO Model	CC	DA From	A To	ANT. Front	POST. Rear
YAMAHA					
MAJESTY	400	2004	2007	X	
MAJESTY-ABS	400	2008	→	X	

* l'immagine del prodotto è puramente indicativa
picture for illustrative purposes only

ACCOSSATO

dischi freno brake rotor

APPLICAZIONI PER CODICE DISCO / applications for rotor code

DK
DK094

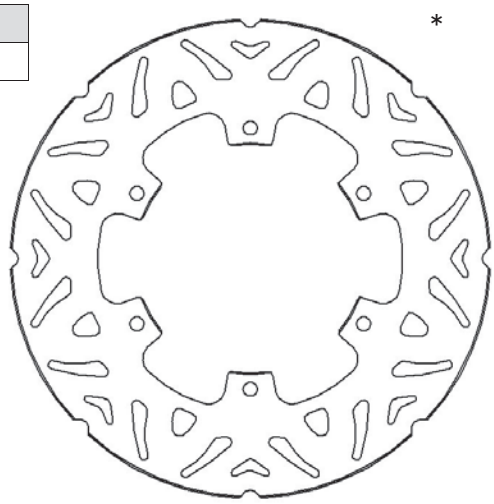

*

DK
DK095

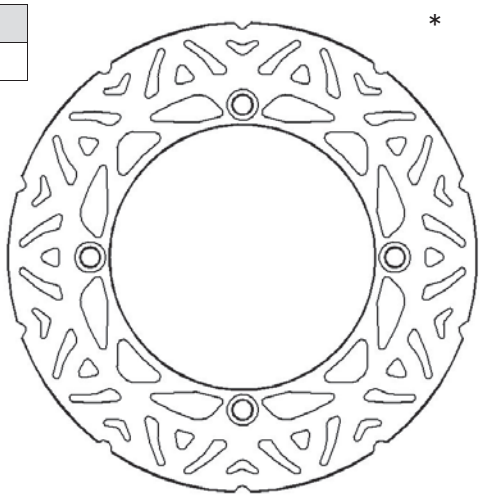

*

*** l'immagine del prodotto è puramente indicativa**
picture for illustrative purposes only

CODICE Reference	Ø ESTERNO Outer	Ø INTERNO Inner	SPESSORE Thickness	NR FORI No. holes	INTERASSE FORI Bolt patterns	Ø FORI Holes	CAMPANATURA Total height
DK094	282	132	5	6	150	8,5	0

CROSS REFERENCE		
ACCOSSATO	BREMBO	BRAKING
DK094	68B407D0	ND

CODICE OEM	
YAMAHA	23P2582W0000

DK094					
MODELLO Model	CC	DA From	A To	ANT. Front	POST. Rear
YAMAHA					
XV-S-DRAG-STAR	125	1999	2002	X	
XV-S-VIRAGO	125	1997	2000	X	
XV-VIRAGO	125	1997	2001	X	
XV-S-VIRAGO	250	1995	2007	X	
XV-VIRAGO	250	1995	1987	X	
T-MAX	500	2001	2003	X	
XT-E	600	1995	→	X	
XTZ-TENERE'	660	1991	1996	X	
XV-VIRAGO	750	1994	2000	X	
GTS	1000	1993	1996		X
FJ	1100	1984	1985	X	X
XVS-DRAG-STAR	1100	1999	2006		X
FJ	1200	1988	1995		X
FJ-ABS	1200	1988	1995		X
V-MAX	1200	1986	1992	X	X
V-MAX	1200	1993	2006		X
XTZ-SUPERTENERE	1200	2010	2013		X
FJR-A	1300	2006	→		X
FJR-ABS	1300	2001	2004		X
FJR-ABS	1300	2006	→		X
FJR-AS	1300	2006	→		X

*** l'immagine del prodotto è puramente indicativa**
picture for illustrative purposes only

CODICE Reference	Ø ESTERNO Outer	Ø INTERNO Inner	SPESSORE Thickness	NR FORI No. holes	INTERASSE FORI Bolt patterns	Ø FORI Holes	CAMPANATURA Total height
DK095	285	62	4	4	79	10,5	0

CROSS REFERENCE		
ACCOSSATO	BREMBO	BRAKING
DK095	68B407D2	ND

CODICE OEM	
BMW	/

DK095					
MODELLO Model	CC	DA From	A To	ANT. Front	POST. Rear
BMW					
K-75	750	1984	1996	X	
K-75-C	750	1985	1991	X	
K-75-RT	750	1990	1996	X	
K-75-S	750	1985	1988	X	
K-75-S	750	1989	1992	X	
K-75-S	750	1993	1996	X	
K-100	1000	1983	1989	X	
K-100-LT-ABS	1000	1990	1991	X	
K-100-RS	1000	1983	1991	X	
K-100-RT	1000	1984	1989	X	

dischi freno brake rotor

APPLICAZIONI PER CODICE DISCO / applications for rotor code

DK
DK096

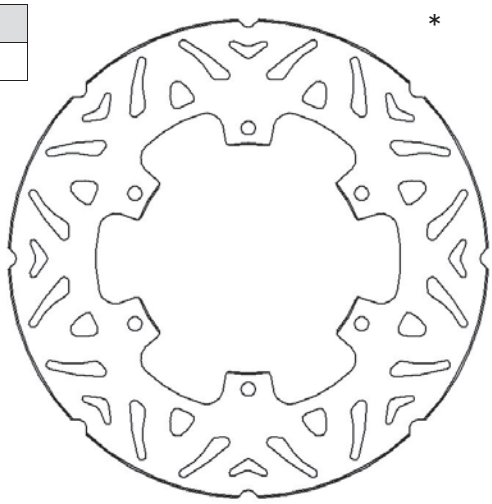

* l'immagine del prodotto è puramente indicativa
picture for illustrative purposes only

CODICE Reference	Ø ESTERNO Outer	Ø INTERNO Inner	SPESSORE Thickness	NR FORI No. holes	INTERASSE FORI Bolt patterns	Ø FORI Holes	CAMPANATURA Total height
DK096	300	100	5	6	120	6,5	0

CROSS REFERENCE		
ACCOSSATO	BREMBO	BRAKING
DK096	68B407D4	ND

CODICE OEM	
PIAGGIO	58546R5

DK096					
MODELLO Model	CC	DA From	A To	ANT. Front	POST. Rear
PIAGGIO					
BEVERLY-I.E.	300	2010	→	X	
BEVERLY-S	300	2011	→	X	
BEVERLY-I.E.-GT	350	2011	→	X	
BEVERLY-S	350	2014	→	X	

DK
DK097

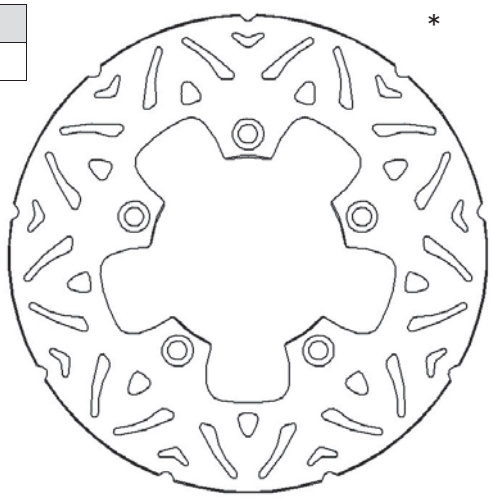

* l'immagine del prodotto è puramente indicativa
picture for illustrative purposes only

CODICE Reference	Ø ESTERNO Outer	Ø INTERNO Inner	SPESSORE Thickness	NR FORI No. holes	INTERASSE FORI Bolt patterns	Ø FORI Holes	CAMPANATURA Total height
DK097	263	101	5	5	120	8,25	0

CROSS REFERENCE		
ACCOSSATO	BREMBO	BRAKING
DK097	68B407D9	RF8128

CODICE OEM	
PEUGEOT	771184

DK097					
MODELLO Model	CC	DA From	A To	ANT. Front	POST. Rear
PEUGEOT					
GEO-RS	125	2007	2008	X	
GEOPOLIS	125	2006	2009	X	
GEOPOLIS-RS	125	2010	→	X	
SATELIS	125	2004	2008	X	
SATELIS-ABS	125	2006	2008	X	
SATELIS-COMPRESSOR	125	2011	→	X	
SATELIS-RS	125	2011	→	X	
GEO-RS	250	2006	2008	X	
GEOPOLIS	250	2006	2009	X	
SATELIS	250	2006	→	X	
SATELIS-RS	250	2011	→	X	
GEO-RS	300	2011	→	X	
GEOPOLIS	300	2011	→	X	
GEOPOLIS-GT	300	2013	→	X	
SATELIS	300	2014	→	X	
GEOPOLIS	400	2007	2009	X	
GEOPOLIS-GT	400	2014	→	X	
GEOPOLIS-RS	400	2007	2008	X	
SATELIS	400	2007	→	X	
SATELIS-RS	400	2007	→	X	
GEOPOLIS	500	2008	→	X	
GEOPOLIS-RS	500	2009	→	X	
SATELIS	500	2006	→	X	
SATELIS-RS	500	2007	→	X	
SATELIS-ABS	600	2004	→	X	

ACCOSSATO

dischi freno brake rotor

APPLICAZIONI PER CODICE DISCO / applications for rotor code

DK
DK098

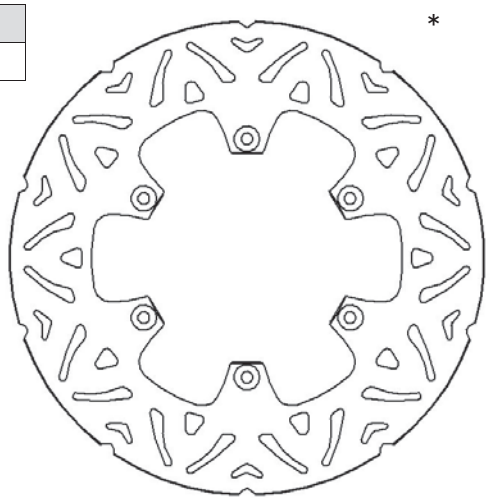

*

*** l'immagine del prodotto è puramente indicativa**
picture for illustrative purposes only

CODICE Reference	Ø ESTERNO Outer	Ø INTERNO Inner	SPESSORE Thickness	NR FORI No. holes	INTERASSE FORI Bolt patterns	Ø FORI Holes	CAMPANATURA Total height
DK098	276	144,5	5	6	166	10,5	0

CROSS REFERENCE		
ACCOSSATO	BREMBO	BRAKING
DK098	68B407E9	HO22FI

CODICE OEM	
DAELIM	45351BA59010M1
HONDA	/
TRIUMPH	/

DK098					
MODELLO Model	CC	DA From	A To	ANT. Front	POST. Rear
DAELIM					
ROADWIN-FI	125	2011	2012	X	
ROADWIN-R-FI	125	1999	2000	X	
ROADWIN-R-FI	125	2011	2012	X	
ROCKET	125	1999	2000	X	
VL-DAYSTAR-CLASSIC	125	2000	2003	X	
VL-DAYSTAR-FI	125	2000	2012	X	
VT-EVOLUTION	125	1999	2011	X	
HONDA					
CBR-R	125	2003	2009	X	
CBR-R-REPSOL	125	2003	2009	X	
VFR-R	400	1986	1988	X	
CBR-F	600	1987	1990	X	
CBR-F	600	1991	1994	X	
SILVER-WING-ABS	600	2003	→	X	
XL-V-TRANSALP	600	1987	1990	X	
XL-V-TRANSALP	600	1991	1993	X	
XL-V-TRANSALP-VR/VT	600	1994	1996	X	
SLR	650	1997	1999	X	
VIGOR-FX	650	1999	2001	X	
CBX-F	750	1984	1988	X	
VFR-F	750	1985	1987	X	
XLV-R	750	1983	1987	X	
VF-F	1000	1984	1988	X	
VF-R	1000	1986	1987	X	
TRIUMPH					
TIGER	900	1993	1998	X	

DK
DK099

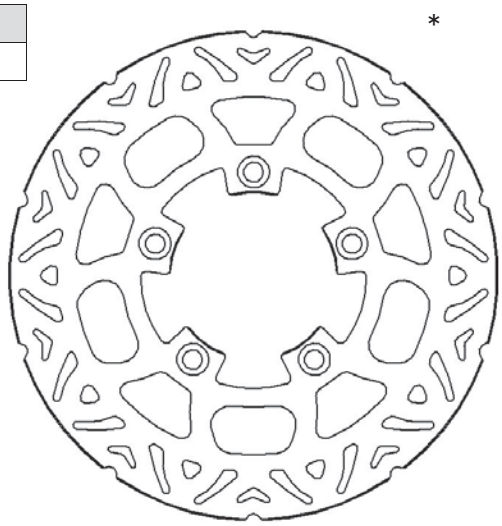

*

*** l'immagine del prodotto è puramente indicativa**
picture for illustrative purposes only

CODICE Reference	Ø ESTERNO Outer	Ø INTERNO Inner	SPESSORE Thickness	NR FORI No. holes	INTERASSE FORI Bolt patterns	Ø FORI Holes	CAMPANATURA Total height
DK099	220	102	4,5	5	120	8,5	0

CROSS REFERENCE		
ACCOSSATO	BREMBO	BRAKING
DK099	68B407G2	ND

CODICE OEM	
BMW	/

DK099					
MODELLO Model	CC	DA From	A To	ANT. Front	POST. Rear
BMW					
C-1	125	1999	→	X	
C-1-EXECUTIVE	125	2000	→	X	
C-1-FRIENDS	125	2001	→	X	
C-1	200	2001	→	X	
C-1-EXECUTIVE	200	2001	→	X	
C-1-FRIENDS	200	2001	→	X	

dischi freno brake rotor

APPLICAZIONI PER CODICE DISCO / applications for rotor code

DK
DK100

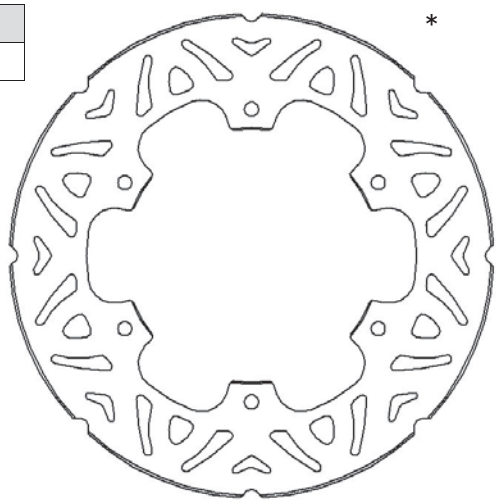

* l'immagine del prodotto è puramente indicativa
picture for illustrative purposes only

CODICE Reference	Ø ESTERNO Outer	Ø INTERNO Inner	SPESSORE Thickness	NR FORI No. holes	INTERASSE FORI Bolt patterns	Ø FORI Holes	CAMPANATURA Total height
DK100	300	105	5	6	120	6,5	0

CROSS REFERENCE		
ACCOSSATO	BREMBO	BRAKING
DK100	68B407G5	ND

CODICE OEM	
APRILIA	AP8113485
BMW	/
HUSQVARNA	2345824

DK100					
MODELLO Model	CC	DA From	A To	ANT. Front	POST. Rear
APRILIA					
PEGASO	125	1989	1999	X	
PEGASO	600	1989	1991	X	
PEGASO	650	1991	1992	X	
PEGASO	650	1993	2000	X	
PEGASO I.E.	650	2001	2004	X	
PEGASO TRAIL	650	2005	2008	X	
BMW					
F-650	650	1993	2001	X	
F-650-CS	650	2002	2007	X	
F-650-FL	650	1993	2000	X	
F-650-GS	650	2000	2007	X	
F-650-GS	650	2008	→	X	
F-650-GS-ABS	650	2000	2007	X	
F-650-GS-ABS	650	2008	→	X	
F-650-ST	650	1997	2001	X	
G-650-GS	650	2009	→	X	
G-650-XCHALLENGE	650	2007	2009	X	
G-650-XCOUNTRY	650	2007	2009	X	
HUSQVARNA					
TR-STRADA	650	2013	→	X	
TR-TERRA	650	2013	→	X	

DK
DK101

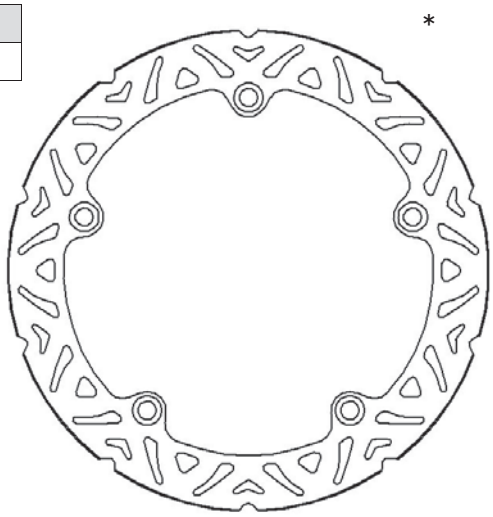

* l'immagine del prodotto è puramente indicativa
picture for illustrative purposes only

CODICE Reference	Ø ESTERNO Outer	Ø INTERNO Inner	SPESSORE Thickness	NR FORI No. holes	INTERASSE FORI Bolt patterns	Ø FORI Holes	CAMPANATURA Total height
DK101	320	211	5	5	230	10,5	0

CROSS REFERENCE		
ACCOSSATO	BREMBO	BRAKING
DK101	68B407G7	RF7113

CODICE OEM	
HONDA	/

DK101					
MODELLO Model	CC	DA From	A To	ANT. Front	POST. Rear
HONDA					
CTX	700	2014	→	X	
CTX-DCTI-ABS	700	2014	→	X	
CTX-N	700	2014	→	X	
CTX-N-DCTI-ABS	700	2000	→	X	
INTEGRA	700	2012	→	X	
NC-ABS	700	2012	→	X	
NC-ABS-DCT	700	2012	→	X	
NC-S	700	2012	→	X	
NC-X-ABS	700	2012	→	X	
NC-X-ABS-DCT	700	2012	→	X	
NC-S	750	2014	→	X	
NC-X	750	2014	→	X	

ACCOSSATO

dischi freno brake rotor

APPLICAZIONI PER CODICE DISCO / applications for rotor code

DK
DK102

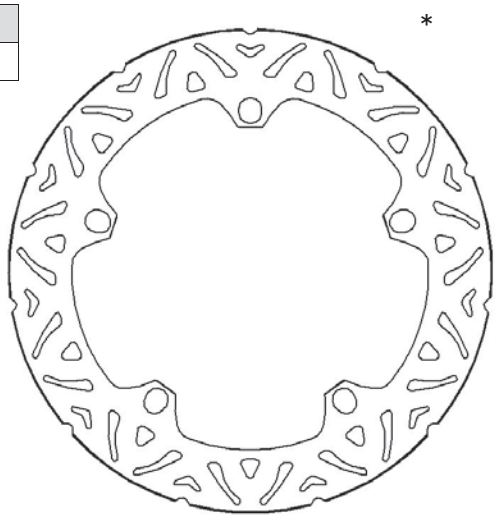

* l'immagine del prodotto è puramente indicativa
picture for illustrative purposes only

CODICE Reference	Ø ESTERNO Outer	Ø INTERNO Inner	SPESSORE Thickness	NR FORI No. holes	INTERASSE FORI Bolt patterns	Ø FORI Holes	CAMPANATURA Total height
DK102	320	180,5	4,5	5	203,4	16,6	0

CROSS REFERENCE		
ACCOSSATO	BREMBO	BRAKING
DK102	68B407H7	RH7004

CODICE OEM	
HONDA	/
HUSQVARNA	8000H3767

DK102					
MODELLO Model	CC	DA From	A To	ANT. Front	POST. Rear
HONDA					
CBF	250	2004	2008	X	
HUSQVARNA					
NUDA-ABS	900	2011	→	X	
NUDA-R	900	2011	→	X	

DK
DK103

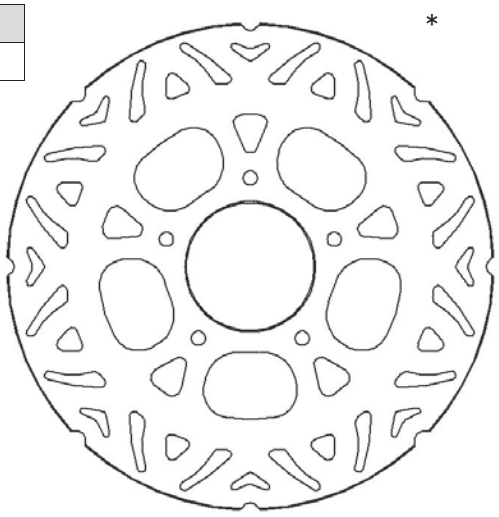

* l'immagine del prodotto è puramente indicativa
picture for illustrative purposes only

CODICE Reference	Ø ESTERNO Outer	Ø INTERNO Inner	SPESSORE Thickness	NR FORI No. holes	INTERASSE FORI Bolt patterns	Ø FORI Holes	CAMPANATURA Total height
DK103	280	60	5	5	80	8,5	0

CROSS REFERENCE		
ACCOSSATO	BREMBO	BRAKING
DK103	68B407J5	ND

CODICE OEM	
PIAGGIO	668824

DK103					
MODELLO Model	CC	DA From	A To	ANT. Front	POST. Rear
PIAGGIO					
X10-EXECUTIVE	125	2013	→	X	
X10-I.E.	125	2012	→	X	
X10-EXECUTIVE-ABS	350	2012	→	X	
X10-I.E.	350	2012	→	X	
X10	500	2012	→	X	
X10-EXECUTIVE	500	2012	→	X	

dischi freno brake rotor

APPLICAZIONI PER CODICE DISCO / applications for rotor code

DK
DK104

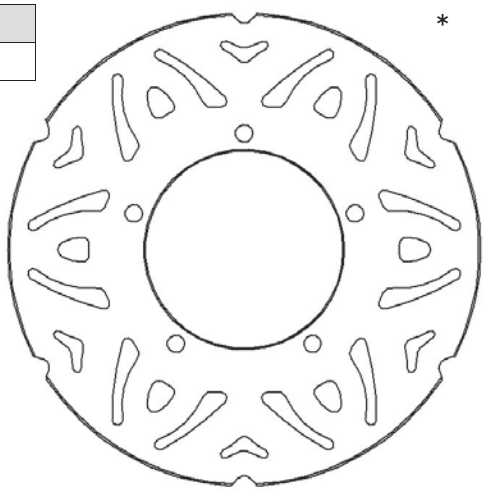

* l'immagine del prodotto è puramente indicativa
picture for illustrative purposes only

CODICE Reference	Ø ESTERNO Outer	Ø INTERNO Inner	SPESSORE Thickness	NR FORI No. holes	INTERASSE FORI Bolt patterns	Ø FORI Holes	CAMPANATURA Total height
DK104	290	130	4,5	5	150	10,5	0

CROSS REFERENCE		
ACCOSSATO	BREMBO	BRAKING
DK104	68B407L2	ND

CODICE OEM	
KAWASAKI	41080057811H

DK104					
MODELLO Model	CC	DA From	A To	ANT. Front	POST. Rear
KAWASAKI					
Z-SL	250	2015	→	X	
NINJA-ABS	300	2013	→	X	
Z-ABS	300	2015	→	X	

DK
DK105

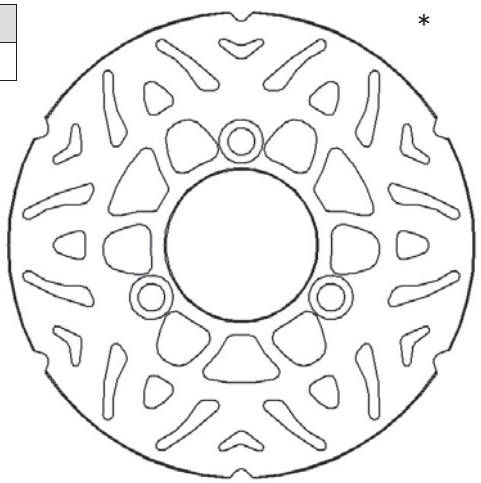

* l'immagine del prodotto è puramente indicativa
picture for illustrative purposes only

CODICE Reference	Ø ESTERNO Outer	Ø INTERNO Inner	SPESSORE Thickness	NR FORI No. holes	INTERASSE FORI Bolt patterns	Ø FORI Holes	CAMPANATURA Total height
DK105	200	64	4	3	86	8,5	0

CROSS REFERENCE		
ACCOSSATO	BREMBO	BRAKING
DK105	68B407L7	ND

CODICE OEM	
PEUGEOT	781290

DK105					
MODELLO Model	CC	DA From	A To	ANT. Front	POST. Rear
PEUGEOT					
METROPOLIS-GT	400	2014	→	X	
METROPOLIS-i	400	2014	→	X	
METROPOLIS-i-SPORT	400	2014	→	X	
METROPOLIS-RS	400	2014	→	X	

ACCOSSATO

dischi freno brake rotor

APPLICAZIONI PER CODICE DISCO / applications for rotor code

DK
DK106

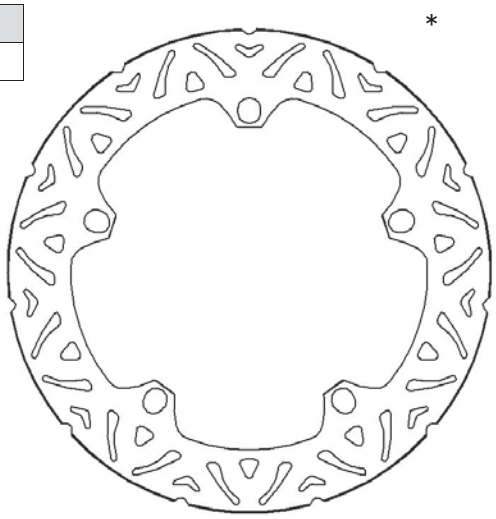

*

*** l'immagine del prodotto è puramente indicativa**
picture for illustrative purposes only

CODICE Reference	Ø ESTERNO Outer	Ø INTERNO Inner	SPESSORE Thickness	NR FORI No. holes	INTERASSE FORI Bolt patterns	Ø FORI Holes	CAMPANATURA Total height
DK106	310	165	4,5	5	235	20,6	0

CROSS REFERENCE		
ACCOSSATO	BREMBO	BRAKING
DK106	68B407N0	ND

CODICE OEM	
HONDA	/

DK106					
MODELLO Model	CC	DA From	A To	ANT. Front	POST. Rear
HONDA					
CROSSTOURER	1200	2012	2014	X	
CROSSTOURER-DCT-TRAVEL-EDITION	1200	2012	2014	X	
CROSSTOURER-L	1200	2014	→	X	
CROSSTOURER-S	1200	2014	→	X	

DK
DK107

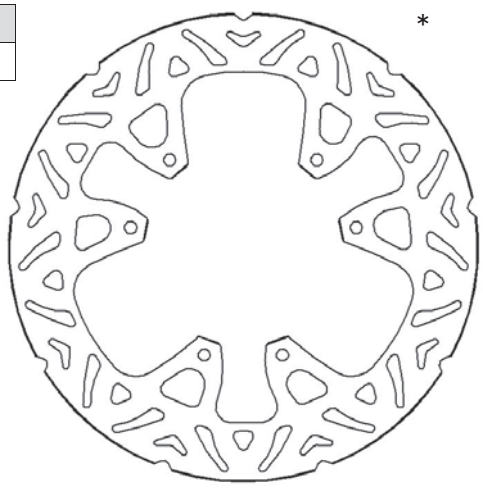

*

*** l'immagine del prodotto è puramente indicativa**
picture for illustrative purposes only

CODICE Reference	Ø ESTERNO Outer	Ø INTERNO Inner	SPESSORE Thickness	NR FORI No. holes	INTERASSE FORI Bolt patterns	Ø FORI Holes	CAMPANATURA Total height
DK107	260	101	3	6	117	6,25	0

CROSS REFERENCE		
ACCOSSATO	BREMBO	BRAKING
DK107	68B407N3	ND

CODICE OEM	
HONDA	/

DK107					
MODELLO Model	CC	DA From	A To	ANT. Front	POST. Rear
HONDA					
CRF	250	2015	→	X	
CRF-R	250	2015	→	X	
CRF	450	2015	→	X	

dischi freno brake rotor

APPLICAZIONI PER CODICE DISCO / applications for rotor code

DK
DK108

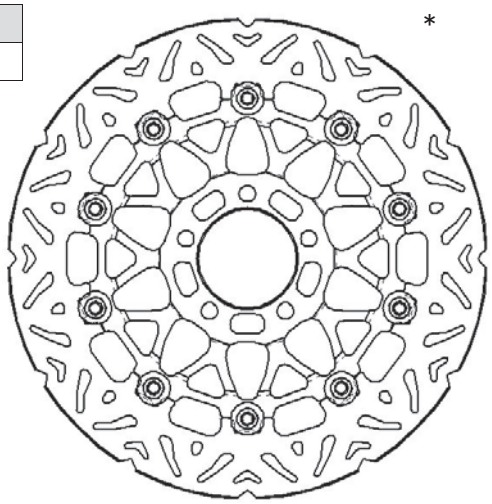

* **l'immagine del prodotto è puramente indicativa**
picture for illustrative purposes only

COLORI FASCIA FRENANTE / braking strip colours		
NERO	black	N

CODICE Reference	Ø ESTERNO Outer	Ø INTERNO Inner	SPESSORE Thickness	NR FORI No. holes	INTERASSE FORI Bolt patterns	Ø FORI Holes	CAMPANATURA Total height
DK108	260	62	5	5	79	8	/

CROSS REFERENCE		
ACCOSSATO	BREMBO	BRAKING
DK108	178B40836	ND

CODICE OEM	
BMW	/

DK108					
MODELLO Model	CC	DA From	A To	ANT. Front	POST. Rear
BMW					
R-45	450	1978	1986	X	
R-65	650	1978	1980	X	
R-65-GS	650	1987	1992	X	
R-80-GS	800	1988	1990	X	
R-80-ST	800	1980	1992	X	

DK
DK109

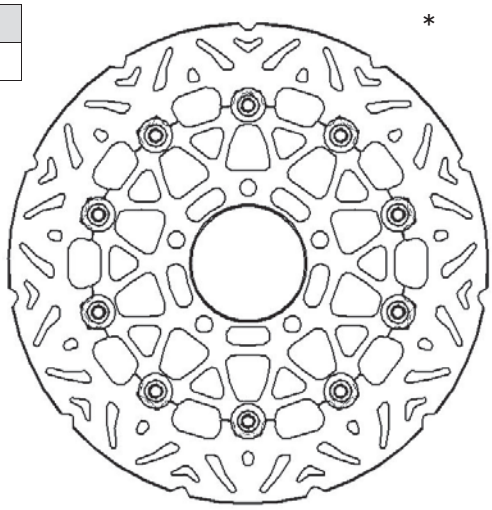

* **l'immagine del prodotto è puramente indicativa**
picture for illustrative purposes only

COLORI FASCIA FRENANTE / braking strip colours		
NERO	black	N
VERDE	green	G

CODICE Reference	Ø ESTERNO Outer	Ø INTERNO Inner	SPESSORE Thickness	NR FORI No. holes	INTERASSE FORI Bolt patterns	Ø FORI Holes	CAMPANATURA Total height
DK109	250	109	3	4	126	9,5	/

CROSS REFERENCE		
ACCOSSATO	BREMBO	BRAKING
DK109	78B40811	ND

CODICE OEM	
KAWASAKI	410800082

DK109					
MODELLO Model	CC	DA From	A To	ANT. Front	POST. Rear
KAWASAKI					
KX	125	2006	2008	X	
KLX	250	2014	→	X	
KX	250	2006	2008	X	
KX-F	250	2006	2013	X	
KXE-F	250	2006	2007	X	
KLX-F	450	2007	2009	X	
KLX-R	450	2006	→	X	
KX-F	450	2006	2014	X	
KXE-F	450	2006	2007	X	

ACCOSSATO

dischi freno brake rotor

APPLICAZIONI PER CODICE DISCO / applications for rotor code

DK
DK110

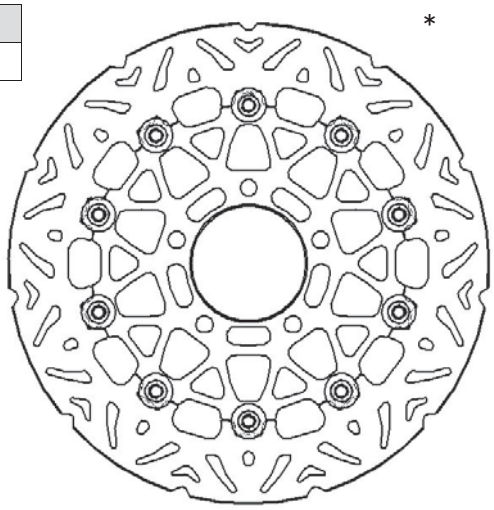

* **l'immagine del prodotto è puramente indicativa**
picture for illustrative purposes only

COLORI FASCIA FRENANTE / braking strip colours		
NERO	black	N

CODICE Reference	Ø ESTERNO Outer	Ø INTERNO Inner	SPESSORE Thickness	NR FORI No. holes	INTERASSE FORI Bolt patterns	Ø FORI Holes	CAMPANATURA Total height
DK110	250	118	3	4	134	9,5	/

CROSS REFERENCE		
ACCOSSATO	BREMBO	BRAKING
DK110	78B40812	ND

CODICE OEM	
SUZUKI	59221-28H10-000

DK110					
MODELLO Model	CC	DA From	A To	ANT. Front	POST. Rear
SUZUKI					
RM-Z	250	2007	→	X	
RM-Z	450	2005	→	X	
RMX	450	2010	2011	X	

DK
DK111

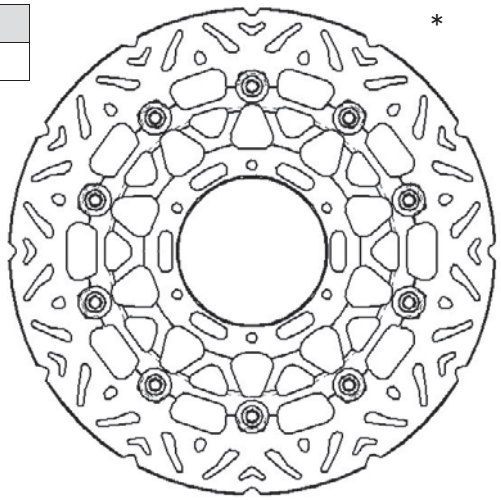

* **l'immagine del prodotto è puramente indicativa**
picture for illustrative purposes only

COLORI FASCIA FRENANTE / braking strip colours		
NERO	black	N

CODICE Reference	Ø ESTERNO Outer	Ø INTERNO Inner	SPESSORE Thickness	NR FORI No. holes	INTERASSE FORI Bolt patterns	Ø FORI Holes	CAMPANATURA Total height
DK111	250	119	3	6	134	6,5	/

CROSS REFERENCE		
ACCOSSATO	BREMBO	BRAKING
DK111	78B40813	ND

CODICE OEM	
SUZUKI	59221-13E00-000
YAMAHA	5MV2581T0000

DK111					
MODELLO Model	CC	DA From	A To	ANT. Front	POST. Rear
SUZUKI					
RM	125	1989	1998	X	
RM	125	2000	2009	X	
RM	250	1989	1989	X	
RM	250	1999	2008	X	
RMX	250	1992	1998	X	
DRZ-E	400	2000	2008	X	
DRZ-S	400	2000	2009	X	
YAMAHA					
WR	125	2001	2007	X	
YZ	125	1998	2001	X	
YZ	125	2002	→	X	
WR	250	2001	2007	X	
WR-F	250	2001	2002	X	
WR-F	250	2003	→	X	
YZ	250	1998	2001	X	
YZ	250	2002	→	X	
YZ-F	250	2001	2002	X	
YZ-F	250	2003	→	X	
YZF-F	250	2003	2005	X	
WR-F	400	1998	2000	X	
YZ-F	400	1998	2000	X	
WR-F	426	2001	2002	X	
YZ-F	426	2001	2002	X	
WR-F	450	2003	→	X	
YZ-F	450	2003	→	X	

dischi freno brake rotor

APPLICAZIONI PER CODICE DISCO / applications for rotor code

DK
DK112

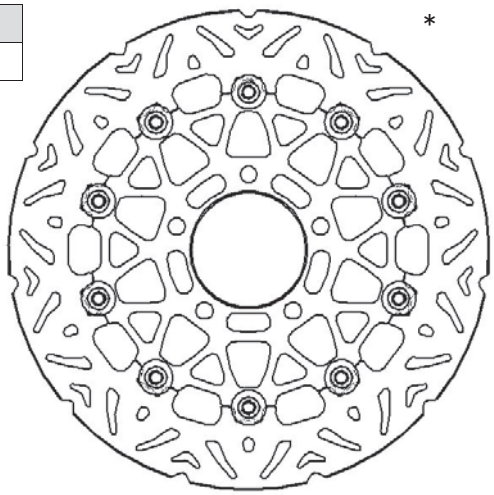

* l'immagine del prodotto è puramente indicativa
picture for illustrative purposes only

COLORI FASCIA FRENANTE / braking strip colours		
NERO	black	N

CODICE Reference	Ø ESTERNO Outer	Ø INTERNO Inner	SPESSORE Thickness	NR FORI No. holes	INTERASSE FORI Bolt patterns	Ø FORI Holes	CAMPANATURA Total height
DK112	260	120	3	4	135	6,5	/

CROSS REFERENCE		
ACCOSSATO	BREMBO	BRAKING
DK112	78B40814	ND

CODICE OEM	
BETA	/
HUSQVARNA	8000H0192

DK112					
MODELLO Model	CC	DA From	A To	ANT. Front	POST. Rear
BETA					
RR	250	2005	2009	X	
RR	350	2011	2012	X	
RR	400	2005	2012	X	
RR-ENDURO	400	2005	2012	X	
RR	450	2005	2012	X	
RR	498	2012	→	X	
RR	520	2010	2011	X	
RR	525	2005	2009	X	

DK112					
MODELLO Model	CC	DA From	A To	ANT. Front	POST. Rear
HUSQVARNA					
CR	125	2000	2004	X	
CR	125	2005	2012	X	
SM	125	2000	→	X	
SM-S	125	2003	2012	X	
SM-S4	125	2010	2011	X	
TE	125	2010	2012	X	
WR	125	2000	2005	X	
WR	125	2006	2012	X	
WR-E	125	2000	2009	X	
CR	250	2000	2004	X	
CR	250	2005	2011	X	
TC	250	2001	2012	X	
TE	250	2004	2006	X	
TXC	250	2011	→	X	
WR	250	2000	2006	X	
WR	250	2007	→	X	
WR	300	2009	→	X	
TE	310	2010	2012	X	
TE-4T	310	2010	2012	X	
TXC	310	2011	→	X	
WR	360	2000	2004	X	
TE	410	2000	2001	X	
TC-449	449	2011	2013	X	
TE-449	449	2011	2013	X	
TC	450	2002	2003	X	
TC	450	2004	2010	X	
TE	450	2000	2006	X	
TE	450	2007	2010	X	
TXC	450	2011	2013	X	
TXC	480	2011	2013	X	
TC	510	2002	2004	X	
TC	510	2005	2009	X	
TE	510	2002	2004	X	
TE	510	2005	2010	X	
TE-CENTENNIAL	510	2004	→	X	
TXC	510	2011	2012	X	
TE	511	2011	2013	X	
TC	570	2000	2003	X	
TE	570	2001	2004	X	
TC	610	2000	2004	X	
TE	610	2000	2004	X	
TE-E	610	2005	2007	X	
TE	630	2010	2012	X	

ACCOSSATO

dischi freno brake rotor

APPLICAZIONI PER CODICE DISCO / applications for rotor code

DK
DK113

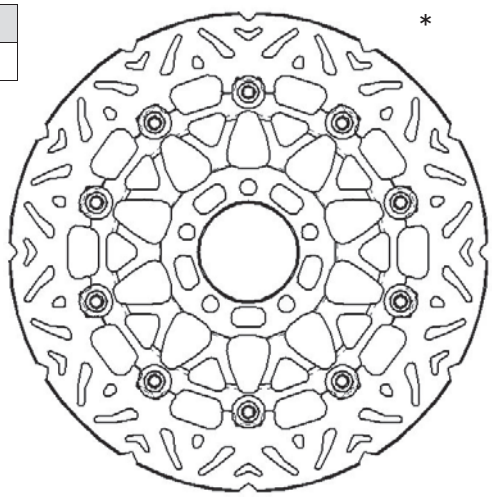

* **l'immagine del prodotto è puramente indicativa**
picture for illustrative purposes only

COLORI FASCIA FRENANTE / braking strip colours		
NERO	black	N

CODICE Reference	Ø ESTERNO Outer	Ø INTERNO Inner	SPESSORE Thickness	NR FORI No. holes	INTERASSE FORI Bolt patterns	Ø FORI Holes	CAMPANATURA Total height
DK113	285	62	4	4	79	10,5	/

CROSS REFERENCE		
ACCOSSATO	BREMBO	BRAKING
DK113	78B40816	ND

CODICE OEM	
BMW	/

DK113

MODELLO Model	CC	DA From	A To	ANT. Front	POST. Rear
BMW					
R-80-GS	800	1987	1987	X	
R-80-PD	800	1991	1995	X	
R-100-R	1000	1991	1996	X	
R-100-RS	1000	1985	1995	X	
R-100-RT	1000	1985	1995	X	

DK
DK114

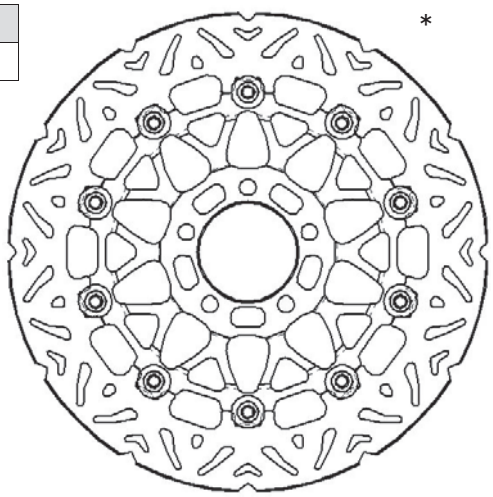

* **l'immagine del prodotto è puramente indicativa**
picture for illustrative purposes only

COLORI FASCIA FRENANTE / braking strip colours		
NERO	black	N

CODICE Reference	Ø ESTERNO Outer	Ø INTERNO Inner	SPESSORE Thickness	NR FORI No. holes	INTERASSE FORI Bolt patterns	Ø FORI Holes	CAMPANATURA Total height
DK114	292	50,5	5	5	82,5	8,5	0

CROSS REFERENCE		
ACCOSSATO	BREMBO	BRAKING
DK114	78B40822	HDFFL

CODICE OEM	
HARLEY DAVIDSON	/

DK114

MODELLO Model	CC	DA From	A To	ANT. Front	POST. Rear
HARLEY DAVIDSON					
XLH-883	883	1970	1984	X	
XLH-883-SPORTSTER	883	1985	1999	X	
XL	1000	1978	1981	X	
XLS-ROADSTER	1000	1979	1984	X	
XLH-1200-SPORT	1200	1996	1999	X	
XLH-1200-SPORTSTER	1200	1987	1999	X	
FLH-1340-ELECTRA-GLIDE	1340	1982	1983	X	
FLH-80	1340	1981	1999	X	
FLSTC-FAT-BOY	1340	1989	1999	X	
FLSTC-HERITAGE-SOFTAIL-CLASSIC	1340	1989	1999	X	
FLSTF-FAT-BOY	1340	1989	1999	X	
FXDWG-DYNA-WIDE-GLIDE	1340	1993	1998	X	
FXLR-1340-LOW-RIDER-CUSTOM	1340	1987	1999	X	
FXR-1340-SUPER-GLIDE	1340	1982	1999	X	
FXRS-1340-LOW-RIDER-SPORT	1340	1987	1999	X	
FXRS-LOW-RIDER-SPORT	1340	1987	1999	X	
FXRT-1340-SPORT-GLIDE	1340	1987	1999	X	
FXSTC-1340-SOFTAIL-CUSTOM	1340	1989	1999	X	
FXSTS-1340-SPRINGER-SOFTAIL	1340	1989	1999	X	
FLHR/I-ROAD-KING	1450	1998	1999	X	
FLHT/I ELECTRA-GLIDE-STANDARD	1450	1998	1999	X	
FLTR/I-ROAD-GLIDE	1450	1998	1999	X	
FXDS-DYNA-SUPER-GLIDE-SPORT	1450	1998	1999	X	
FXDWG-DYNA-WIDE-GLIDE	1450	1993	1999	X	
FXRS-SPORT-GLIDE	1450	1984	1986	X	
FXRT-TOUR-GLIDE	1450	1984	1986	X	
FXSTB-ICE-BOB	1450	2000	2003	X	

dischi freno brake rotor

APPLICAZIONI PER CODICE DISCO / applications for rotor code

DK
DK115

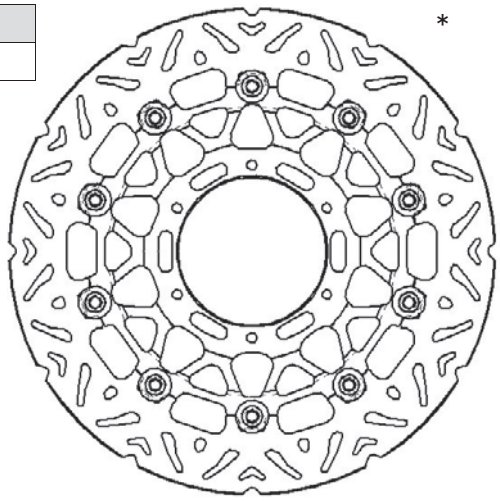

* **l'immagine del prodotto è puramente indicativa**
picture for illustrative purposes only

COLORI FASCIA FRENANTE / braking strip colours		
NERO	black	N
ROSSO	red	R

CODICE Reference	Ø ESTERNO Outer	Ø INTERNO Inner	SPESSORE Thickness	NR FORI No. holes	INTERASSE FORI Bolt patterns	Ø FORI Holes	CAMPANATURA Total height
DK115	296	94	5	6	110	6,5	14,5

CROSS REFERENCE		
ACCOSSATO	BREMBO	BRAKING
DK115	78B40824	STX96

CODICE OEM	
HONDA	/

DK115					
MODELLO Model	CC	DA From	A To	ANT. Front	POST. Rear
HONDA					
CBR-F	600	2011	→	X	
CBR-F-ABS	600	2011	→	X	
HORNET	600	2007	2013	X	
HORNET-ABS	600	2007	2008	X	

DK
DK116

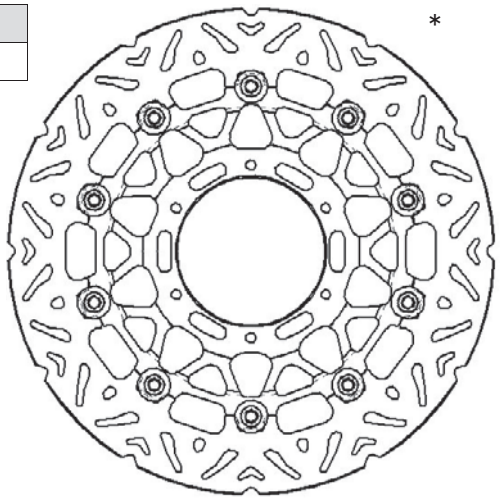

* **l'immagine del prodotto è puramente indicativa**
picture for illustrative purposes only

COLORI FASCIA FRENANTE / braking strip colours		
NERO	black	N

CODICE Reference	Ø ESTERNO Outer	Ø INTERNO Inner	SPESSORE Thickness	NR FORI No. holes	INTERASSE FORI Bolt patterns	Ø FORI Holes	CAMPANATURA Total height
DK116	296	62	5	6	78	6,5	17

CROSS REFERENCE		
ACCOSSATO	BREMBO	BRAKING
DK116	78B40825	STX05

CODICE OEM	
HONDA	/

DK116					
MODELLO Model	CC	DA From	A To	ANT. Front	POST. Rear
HONDA					
CBR-F	600	1999	2000	X	
CBR-F3	600	2003	→	X	
CROSSRUNNER	800	2011	→	X	
VFR-INTERCEPTOR	800	1998	2010	X	
CBR-RR	900	1992	1993	X	
XL-VARADERO	1000	1999	2002	X	
XL-L-VARADERO/ABS	1000	2003	2011	X	
GL-C-VALKIRIA	1500	1997	2003	X	
GL-GOLDWING	1800	2001	→	X	

ACCOSSATO

dischi freno brake rotor

APPLICAZIONI PER CODICE DISCO / applications for rotor code

DK
DK117

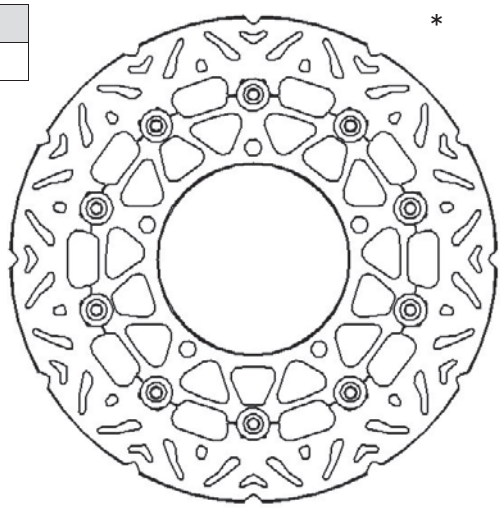

* **l'immagine del prodotto è puramente indicativa**
picture for illustrative purposes only

COLORI FASCIA FRENANTE / braking strip colours		
NERO	black	N

CODICE Reference	Ø ESTERNO Outer	Ø INTERNO Inner	SPESSORE Thickness	NR FORI No. holes	INTERASSE FORI Bolt patterns	Ø FORI Holes	CAMPANATURA Total height
DK117	290	121,5	5	5	142	10,5	0

CROSS REFERENCE		
ACCOSSATO	BREMBO	BRAKING
DK117	78B40829	STX93

CODICE OEM	
SUZUKI	59210-38G10-000

DK117					
MODELLO Model	CC	DA From	A To	ANT. Front	POST. Rear
SUZUKI					
GLADIUS	650	2009	2014	X	
GLADIUS-ABS	650	2009	2014	X	
SV	650	2007	→	X	
SV-S-ABS	650	2007	2009	X	

DK
DK118

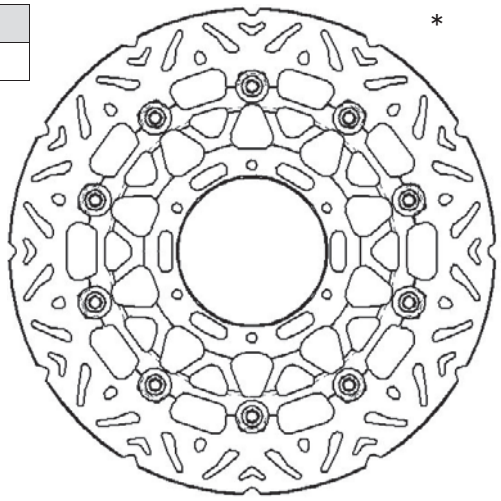

* **l'immagine del prodotto è puramente indicativa**
picture for illustrative purposes only

COLORI FASCIA FRENANTE / braking strip colours		
NERO	black	N

CODICE Reference	Ø ESTERNO Outer	Ø INTERNO Inner	SPESSORE Thickness	NR FORI No. holes	INTERASSE FORI Bolt patterns	Ø FORI Holes	CAMPANATURA Total height
DK118	298	132	5	6	150	8,5	/

CROSS REFERENCE		
ACCOSSATO	BREMBO	BRAKING
DK118	78B40830	ND

CODICE OEM	
YAMAHA	5PX2581T0000

DK118					
MODELLO Model	CC	DA From	A To	ANT. Front	POST. Rear
YAMAHA					
XV-VIRAGO	535	1996	2000	X	
XJ-DIVERSION	600	1998	2003	X	
XJN	600	1998	2003	X	
YZF-R-THUNDER-CAT	600	1996	2004	X	
YZF-R6	600	1999	2002	X	
XVS-DRAG-STAR	650	1997	2004	X	
XVS-DRAG-STAR-CLASSIC	650	1998	2006	X	
TDM	900	2002	2010	X	
TDM-ABS	900	2002	2010	X	
FZS-FAZER	1000	2001	2005	X	
YZF-R1	1000	1998	2001	X	
YZF-R1	1000	2002	2003	X	
YZF-THUNDER-ACE	1000	1996	1998	X	
BT-BULLDOG	1100	2002	2006	X	
XVS-DRAG-STAR	1100	1999	2006	X	
V-MAX	1200	1993	2006	X	
XVZ-VENTURE-ROYALE	1200	1984	1987	X	
XVZ-VENTURE-ROYALE	1200	1996	2007	X	
FJR-ABS	1300	2001	2004	X	
XJR	1300	1999	→	X	
XVS-MIDNIGHT-STAR	1300	2007	2011	X	
WILD-STAR	1600	1999	2007	X	
XV-PC-ROAD-STAR-WARRIOR	1700	2002	2007	X	
XV-ROADLINER	1900	2006	→	X	

dischi freno brake rotor

APPLICAZIONI PER CODICE DISCO / applications for rotor code

DK
DK119

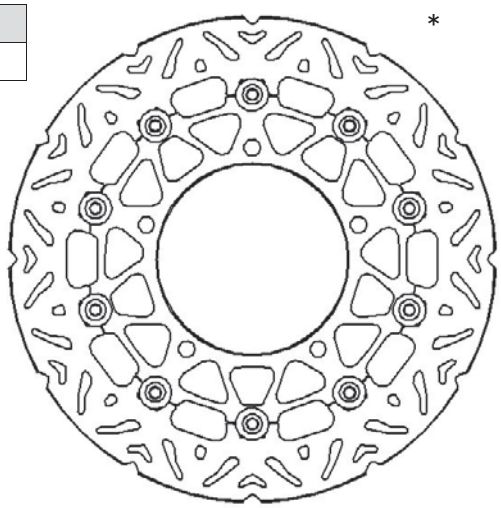

* **l'immagine del prodotto è puramente indicativa**
picture for illustrative purposes only

COLORI FASCIA FRENANTE / braking strip colours		
NERO	black	N
BLU	blue	B

CODICE Reference	Ø ESTERNO Outer	Ø INTERNO Inner	SPESSORE Thickness	NR FORI No. holes	INTERASSE FORI Bolt patterns	Ø FORI Holes	CAMPANATURA Total height
DK119	298	132	5	5	150	8,5	0

CROSS REFERENCE		
ACCOSSATO	BREMBO	BRAKING
DK119	78B40831	STX46

CODICE OEM	
YAMAHA	20S2581T0000
YAMAHA	5YKF581T0000
YAMAHA	1RC2581T0000

DK119					
MODELLO Model	CC	DA From	A To	ANT. Front	POST. Rear
YAMAHA					
DIVERSION	600	2009	→	X	
FZ6-FAZER	600	2004	2008	X	
FZ6-FAZER-S2	600	2007	2008	X	
XJ6	600	2009	2011	X	
XJ-DIVERSION	600	2009	2011	X	
YZF-R6	600	2003	2004	X	
MT-03	660	2006	2011	X	
MT-09	850	2014	→	X	
MT-09-ABS	850	2014	→	X	
MT-09-STREET-RALLY	850	2014	→	X	
MT-09-STREET-RALLY-ABS	850	2014	→	X	

DK
DK120

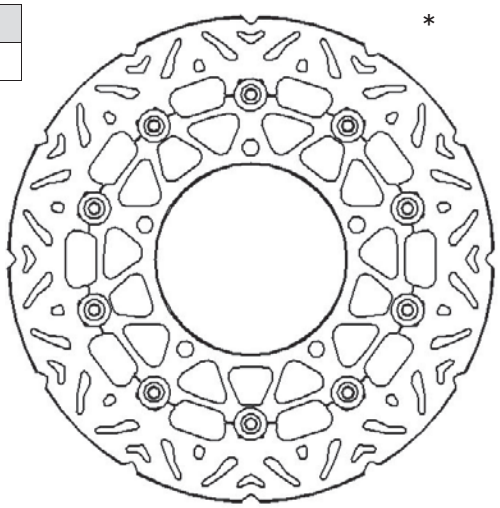

* **l'immagine del prodotto è puramente indicativa**
picture for illustrative purposes only

COLORI FASCIA FRENANTE / braking strip colours		
NERO	black	N
ROSSO	red	R

CODICE Reference	Ø ESTERNO Outer	Ø INTERNO Inner	SPESSORE Thickness	NR FORI No. holes	INTERASSE FORI Bolt patterns	Ø FORI Holes	CAMPANATURA Total height
DK120	296	94	4,5	6	110	6,5	/

CROSS REFERENCE		
ACCOSSATO	BREMBO	BRAKING
DK120	78B40838	ND

CODICE OEM	
HONDA	/

DK120					
MODELLO Model	CC	DA From	A To	ANT. Front	POST. Rear
HONDA					
CBR-R	250	2011	2013	X	
CBR-R-ABS	250	2011	2013	X	
CBR-R-ABS-TRICOLORE	250	2014	→	X	
CBR	300	2015	→	X	
CBR-ABS	300	2015	→	X	
CBR-ABS-HRC-TRICOLORE	300	2014	→	X	
CBR-R	300	2014	→	X	
CBR-R-ABS	300	2015	→	X	

ACCOSSATO

dischi freno brake rotor

APPLICAZIONI PER CODICE DISCO / applications for rotor code

DK
DK121

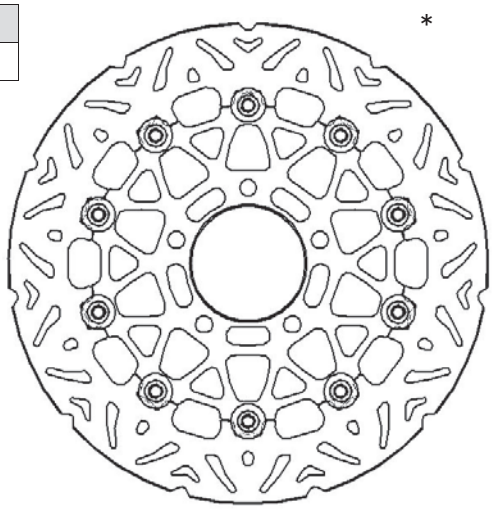

* **l'immagine del prodotto è puramente indicativa**
picture for illustrative purposes only

COLORI FASCIA FRENANTE / braking strip colours		
NERO	black	N

CODICE Reference	Ø ESTERNO Outer	Ø INTERNO Inner	SPESSORE Thickness	NR FORI No. holes	INTERASSE FORI Bolt patterns	Ø FORI Holes	CAMPANATURA Total height
DK121	300	69	5	5	91	10,5	0

CROSS REFERENCE		
ACCOSSATO	BREMBO	BRAKING
DK121	78B40842	STX67

CODICE OEM	
SUZUKI	59210-18G30-000
SUZUKI	59210-18G00-000

DK121					
MODELLO Model	CC	DA From	A To	ANT. Front	POST. Rear
SUZUKI					
GSX-R	600	2004	2005	X	
GSX-R	750	2004	2005	X	
GSX-R	1000	2003	2004	X	

DK
DK122

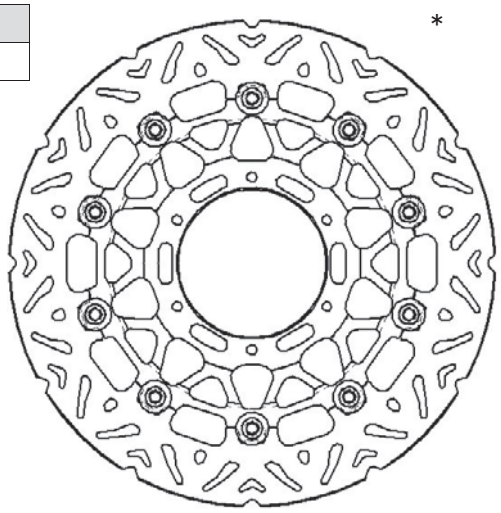

* **l'immagine del prodotto è puramente indicativa**
picture for illustrative purposes only

COLORI FASCIA FRENANTE / braking strip colours		
NERO	black	N

CODICE Reference	Ø ESTERNO Outer	Ø INTERNO Inner	SPESSORE Thickness	NR FORI No. holes	INTERASSE FORI Bolt patterns	Ø FORI Holes	CAMPANATURA Total height
DK122	298	132	4,5	6	150	8,5	0

CROSS REFERENCE		
ACCOSSATO	BREMBO	BRAKING
DK122	78B40843	RL7009

CODICE OEM	
YAMAHA	5VKF581T0000

DK122					
MODELLO Model	CC	DA From	A To	ANT. Front	POST. Rear
YAMAHA					
DT-X-SUPERMOTARD	125	2005	2006	X	
XT-R	660	2004	2013	X	
XT-R	660	2014	→	X	
XTZ-TENERE'	660	2008	2013	X	

dischi freno brake rotor

APPLICAZIONI PER CODICE DISCO / applications for rotor code

DK
DK123

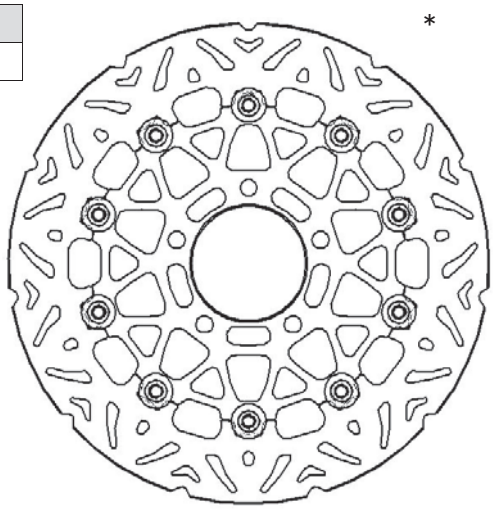

* **l'immagine del prodotto è puramente indicativa**
picture for illustrative purposes only

COLORI FASCIA FRENANTE / braking strip colours		
NERO	black	N
ROSSO	red	R

CODICE Reference	Ø ESTERNO Outer	Ø INTERNO Inner	SPESSORE Thickness	NR FORI No. holes	INTERASSE FORI Bolt patterns	Ø FORI Holes	CAMPANATURA Total height
DK123	305	72	5	5	90	8,5	10

CROSS REFERENCE		
ACCOSSATO	BREMBO	BRAKING
DK123	78B40845	STX97

CODICE OEM	
DUCATI	49240921A

DK123					
MODELLO Model	CC	DA From	A To	ANT. Front	POST. Rear
DUCATI					
HYPERMOTARD	796	2010	2012	X	
HYPERMOTARD	1100	2007	2009	X	
HYPERMOTARD-EVO	1100	2010	2012	X	
HYPERMOTARD-EVO-SP	1100	2010	2012	X	
HYPERMOTARD-S	1100	2007	2009	X	

DK
DK124

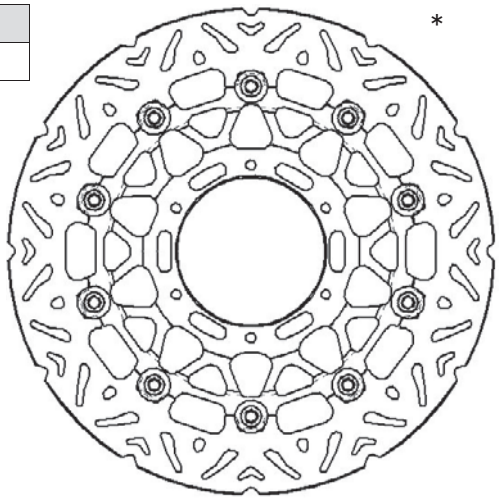

* **l'immagine del prodotto è puramente indicativa**
picture for illustrative purposes only

COLORI FASCIA FRENANTE / braking strip colours		
NERO	black	N

CODICE Reference	Ø ESTERNO Outer	Ø INTERNO Inner	SPESSORE Thickness	NR FORI No. holes	INTERASSE FORI Bolt patterns	Ø FORI Holes	CAMPANATURA Total height
DK124	305	118	5	6	134	9	0

CROSS REFERENCE		
ACCOSSATO	BREMBO	BRAKING
DK124	78B40846	RL7005

CODICE OEM	
BMW	/

DK124					
MODELLO Model	CC	DA From	A To	ANT. Front	POST. Rear
BMW					
R-850-R	850	1994	2001	X	
R-850-RT	850	1995	2001	X	
K-1	1000	1989	1993	X	
K-100-RS-16V	1000	1989	1993	X	
K-1100-LT-(noABS)	1100	1993	2000	X	
K-1100-RS	1100	1993	1999	X	
R-1100-R	1100	1995	2001	X	
R-1100-R-ROADSTER	1100	1995	2001	X	
R-1100-RS	1100	1985	1993	X	
R-1100-RS	1100	1994	2001	X	
R-1100-RT	1100	1994	2001	X	
R-1100-RT-ABS	1100	1994	2001	X	

ACCOSSATO

dischi freno brake rotor

APPLICAZIONI PER CODICE DISCO / applications for rotor code

DK
DK125

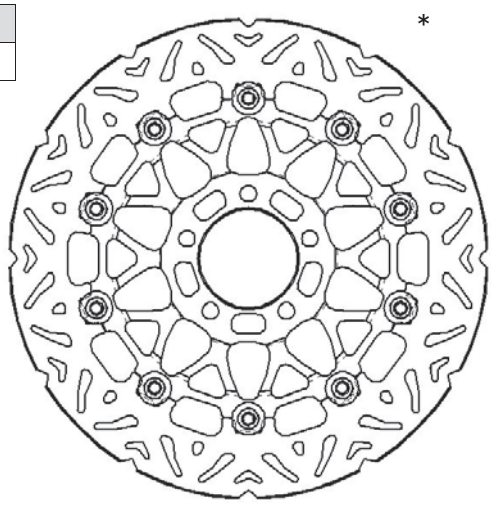

* **l'immagine del prodotto è puramente indicativa**
picture for illustrative purposes only

COLORI FASCIA FRENANTE / braking strip colours		
NERO	black	N

CODICE Reference	Ø ESTERNO Outer	Ø INTERNO Inner	SPESSORE Thickness	NR FORI No. holes	INTERASSE FORI Bolt patterns	Ø FORI Holes	CAMPANATURA Total height
DK125	305	82,3	4,5	5	100,5	10,5	0

CROSS REFERENCE		
ACCOSSATO	BREMBO	BRAKING
DK125	78B40847	RL7007

CODICE OEM	
TRIUMPH	/

DK125					
MODELLO Model	CC	DA From	A To	ANT. Front	POST. Rear
TRIUMPH					
TIGER	800	2011	2014	X	
TIGER-ABS	800	2011	2014	X	
TIGER-XC	800	2011	2014	X	
TIGER-XC-ABS	800	2011	2014	X	
TIGER-EXPLORER	1200	2012	→	X	
TIGER-EXPLORER-XC	1200	2013	→	X	
TIGER-XC	1200	2013	→	X	

DK
DK126

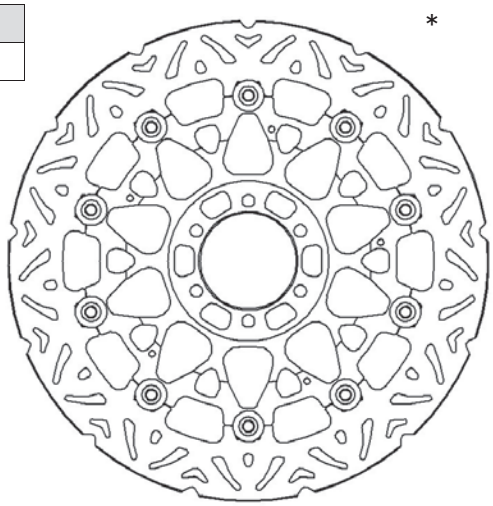

* **l'immagine del prodotto è puramente indicativa**
picture for illustrative purposes only

COLORI FASCIA FRENANTE / braking strip colours		
NERO	black	N
ROSSO	red	R

CODICE Reference	Ø ESTERNO Outer	Ø INTERNO Inner	SPESSORE Thickness	NR FORI No. holes	INTERASSE FORI Bolt patterns	Ø FORI Holes	CAMPANATURA Total height
DK126	300	64	5	6	80	8,5	/

CROSS REFERENCE		
ACCOSSATO	BREMBO	BRAKING
DK126	78B40850	ND

CODICE OEM	
DUCATI	49240881A
DUCATI	49240821A
DUCATI	49240291A

DK126					
MODELLO Model	CC	DA From	A To	ANT. Front	POST. Rear
DUCATI					
MONSTER-620-I.E.	620	2005	2006	X	
MULTISTRADA-620-(BIDISCO)	620	2004	→	X	
MONSTER-695	695	2006	2007	X	
MONSTER-S2-R	803	2005	2006	X	
MONSTER-S2-R-DARK	803	2005	2006	X	
MONSTER-S2-R-1000-DARK	1000	2006	2007	X	

dischi freno brake rotor

APPLICAZIONI PER CODICE DISCO / applications for rotor code

DK
DK127

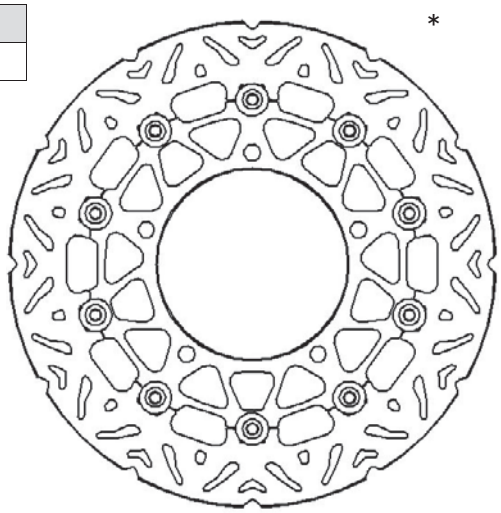

* **l'immagine del prodotto è puramente indicativa**
picture for illustrative purposes only

COLORI FASCIA FRENANTE / braking strip colours		
NERO	black	N

CODICE Reference	Ø ESTERNO Outer	Ø INTERNO Inner	SPESSORE Thickness	NR FORI No. holes	INTERASSE FORI Bolt patterns	Ø FORI Holes	CAMPANATURA Total height
DK127	310	132	5	5	150	8,5	0

CROSS REFERENCE		
ACCOSSATO	BREMBO	BRAKING
DK127	78B40860	STX78

CODICE OEM	
YAMAHA	4C82581T0000
YAMAHA	39P2581T0000
YAMAHA	23P2581T0000

DK127					
MODELLO Model	CC	DA From	A To	ANT. Front	POST. Rear
YAMAHA					
YZF-R6	600	2005	→	X	
FZ-8	800	2010	2013	X	
FZS-FAZER	800	2010	2012	X	
YZF-R1	1000	2007	2014	X	
XTZ-SUPERTENERE	1200	2010	2013	X	

DK
DK128

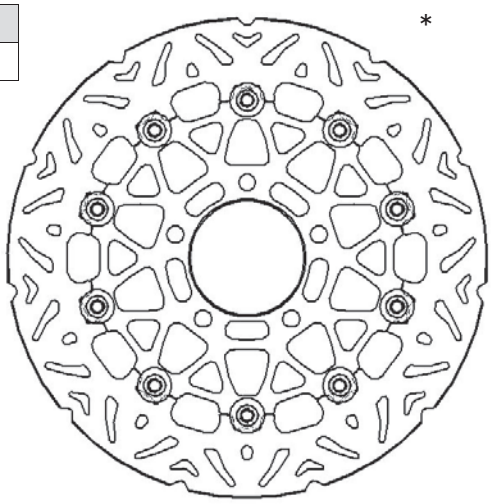

* **l'immagine del prodotto è puramente indicativa**
picture for illustrative purposes only

COLORI FASCIA FRENANTE / braking strip colours		
NERO	black	N

CODICE Reference	Ø ESTERNO Outer	Ø INTERNO Inner	SPESSORE Thickness	NR FORI No. holes	INTERASSE FORI Bolt patterns	Ø FORI Holes	CAMPANATURA Total height
DK128	308	84,5	5	5	100,5	10,5	/

CROSS REFERENCE		
ACCOSSATO	BREMBO	BRAKING
DK128	78B40862	ND

CODICE OEM	
TRIUMPH	/

DK128					
MODELLO Model	CC	DA From	A To	ANT. Front	POST. Rear
TRIUMPH					
DAYTONA	675	2006	2012	X	
DAYTONA-R	675	2011	2012	X	
STREET-TRIPLE	675	2007	2012	X	
STREET-TRIPLE-R	675	2007	2012	X	
TIGER-XC	800	2015	→	X	
TIGER-XCx	800	2015	→	X	
TIGER-XR	800	2015	→	X	
TIGER-XRx	800	2015	→	X	

ACCOSSATO

dischi freno brake rotor

APPLICAZIONI PER CODICE DISCO / applications for rotor code

DK
DK129

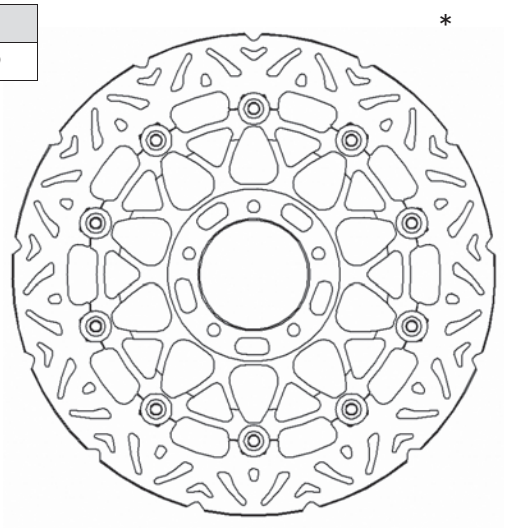

* **l'immagine del prodotto è puramente indicativa**
picture for illustrative purposes only

COLORI FASCIA FRENANTE / braking strip colours		
NERO	black	N

CODICE Reference	Ø ESTERNO Outer	Ø INTERNO Inner	SPESSORE Thickness	NR FORI No. holes	INTERASSE FORI Bolt patterns	Ø FORI Holes	CAMPANATURA Total height
DK129	310	69	5	5	91	10,5	0

CROSS REFERENCE		
ACCOSSATO	BREMBO	BRAKING
DK129	78B40865	STX68

CODICE OEM	
KAWASAKI	41080S012
SUZUKI	59210-27G01-000
SUZUKI	59210-16G00-000

DK129					
MODELLO Model	CC	DA From	A To	ANT. Front	POST. Rear
KAWASAKI					
KLV	1000	2004	2007	X	
SUZUKI					
DL-V-STROM	650	2004	2006	X	
DL-V-STROM	1000	2002	2010	X	
SV	1000	2003	2007	X	
SV-S	1000	2003	2007	X	

DK
DK130

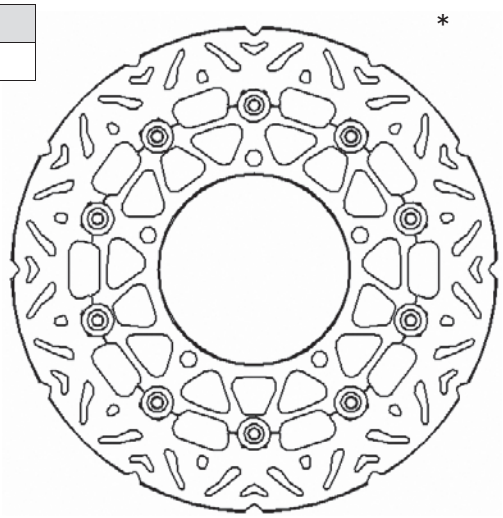

* **l'immagine del prodotto è puramente indicativa**
picture for illustrative purposes only

COLORI FASCIA FRENANTE / braking strip colours		
NERO	black	N

CODICE Reference	Ø ESTERNO Outer	Ø INTERNO Inner	SPESSORE Thickness	NR FORI No. holes	INTERASSE FORI Bolt patterns	Ø FORI Holes	CAMPANATURA Total height
DK130	310	80	5	5	101,5	8,5	/

CROSS REFERENCE		
ACCOSSATO	BREMBO	BRAKING
DK130	78B40868	ND

CODICE OEM	
MV AGUSTA	8000A6228
MV AGUSTA	800082758

DK130					
MODELLO Model	CC	DA From	A To	ANT. Front	POST. Rear
MV AGUSTA					
BRUTALE-S	750	2001	2006	X	
F4-BIPOSTO-S	750	2000	2006	X	
F4-SENNA	750	1998	2006	X	
BRUTALE-S	910	2005	2008	X	
BRUTALE-R	989	2008	2008	X	
F4-S-MAMBA	1000	2004	2007	X	

dischi freno brake rotor

APPLICAZIONI PER CODICE DISCO / applications for rotor code

DK
DK131

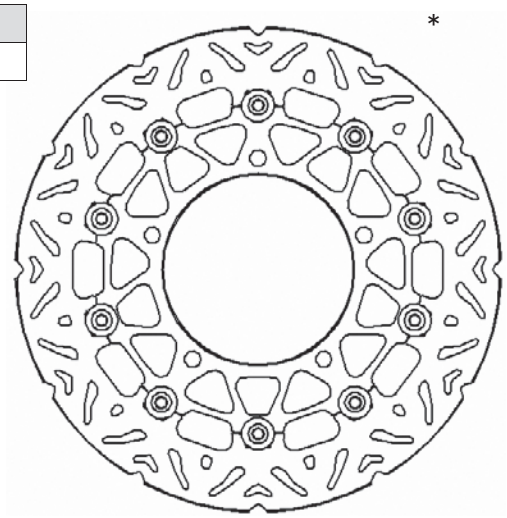

* **l'immagine del prodotto è puramente indicativa**
picture for illustrative purposes only

COLORI FASCIA FRENANTE / braking strip colours		
NERO	black	N
BLU	blue	B

CODICE Reference	Ø ESTERNO Outer	Ø INTERNO Inner	SPESSORE Thickness	NR FORI No. holes	INTERASSE FORI Bolt patterns	Ø FORI Holes	CAMPANATURA Total height
DK131	320	132	5	5	150	8,5	/

CROSS REFERENCE		
ACCOSSATO	BREMBO	BRAKING
DK131	78B40871	ND

CODICE OEM	
YAMAHA	2CR2581T0000
YAMAHA	2D12581T0000
YAMAHA	5D02581T0000

DK131					
MODELLO Model	CC	DA From	A To	ANT. Front	POST. Rear
YAMAHA					
FZ1	1000	2006	2011	X	
FZ1-FAZER	1000	2006	2012	X	
YZF-R1	1000	2004	2006	X	
YZF-R1	1000	2015	→	X	
YZF-R1M-SPECIAL-EDITION	1000	2015	→	X	

DK
DK132

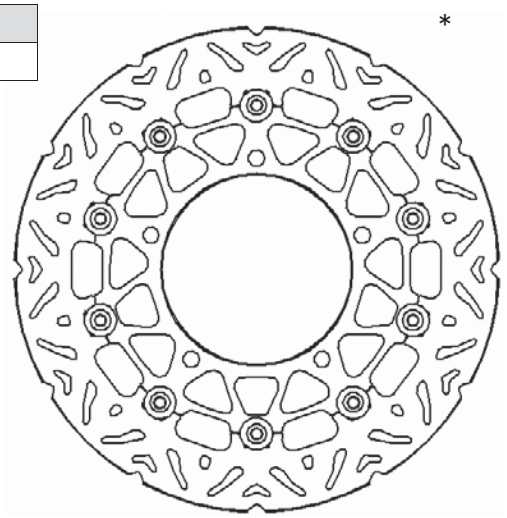

* **l'immagine del prodotto è puramente indicativa**
picture for illustrative purposes only

COLORI FASCIA FRENANTE / braking strip colours		
NERO	black	N

CODICE Reference	Ø ESTERNO Outer	Ø INTERNO Inner	SPESSORE Thickness	NR FORI No. holes	INTERASSE FORI Bolt patterns	Ø FORI Holes	CAMPANATURA Total height
DK132	320	150	5	5	166	10,5	0

CROSS REFERENCE		
ACCOSSATO	BREMBO	BRAKING
DK132	78B40872	RL7011

CODICE OEM	
TRIUMPH	/

DK132					
MODELLO Model	CC	DA From	A To	ANT. Front	POST. Rear
TRIUMPH					
SPEED-TRIPLE	1050	2007	2008	X	
SPEED-TRIPLE	1050	2009	→	X	
SPEED-TRIPLE-ABS	1050	2007	2008	X	
SPEED-TRIPLE-ABS	1050	2009	→	X	
SPEED-TRIPLE-R	1050	2014	→	X	
SPEED-TRIPLE-R-ABS	1050	2014	→	X	
SPRINT-GT	1050	2010	→	X	
SPRINT-ST-i	1050	2011	2012	X	
SPRINT-ST-i-ABS	1050	2011	2012	X	
TROPHY	1215	2012	→	X	
TROPHY-SE	1215	2012	→	X	

ACCOSSATO

dischi freno brake rotor

APPLICAZIONI PER CODICE DISCO / applications for rotor code

DK
DK133

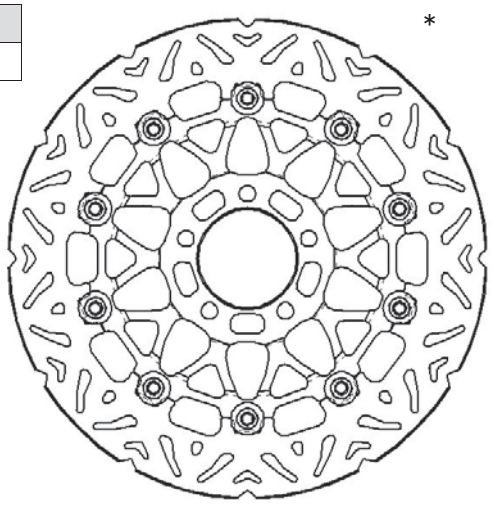

* **l'immagine del prodotto è puramente indicativa**
picture for illustrative purposes only

COLORI FASCIA FRENANTE / braking strip colours		
NERO	black	N

CODICE Reference	Ø ESTERNO Outer	Ø INTERNO Inner	SPESSORE Thickness	NR FORI No. holes	INTERASSE FORI Bolt patterns	Ø FORI Holes	CAMPANATURA Total height
DK133	320	78	5	5	100,5	10,5	14,5

CROSS REFERENCE		
ACCOSSATO	BREMBO	BRAKING
DK133	78B40873	STX61

CODICE OEM	
TRIUMPH	/

DK133					
MODELLO Model	CC	DA From	A To	ANT. Front	POST. Rear
TRIUMPH					
DAYTONA-T955I	955	2002	2006	X	
SPEED-TRIPLE	955	2002	2004	X	
SPRINT-ST	1050	2005	2010	X	
SPRINT-ST-ABS	1050	2005	2010	X	
ROCKET-III	2300	2004	2009	X	
ROCKET-III-CLASSIC	2300	2007	2009	X	
ROCKET-III-ROADSTER-ABS	2300	2010	→	X	
ROCKET-X	2300	2015	→	X	

DK
DK134

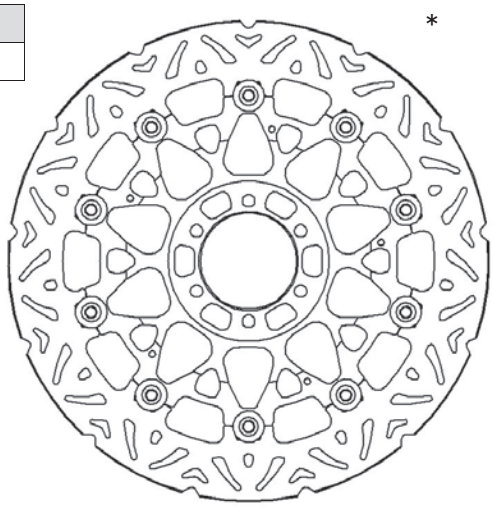

* **l'immagine del prodotto è puramente indicativa**
picture for illustrative purposes only

COLORI FASCIA FRENANTE / braking strip colours		
NERO	black	N

CODICE Reference	Ø ESTERNO Outer	Ø INTERNO Inner	SPESSORE Thickness	NR FORI No. holes	INTERASSE FORI Bolt patterns	Ø FORI Holes	CAMPANATURA Total height
DK134	320	78	5	6	100,5	10,5	10,3

CROSS REFERENCE		
ACCOSSATO	BREMBO	BRAKING
DK134	78B40874	STX29

CODICE OEM	
TRIUMPH	/

DK134					
MODELLO Model	CC	DA From	A To	ANT. Front	POST. Rear
TRIUMPH					
T509-SPEED-TRIPLE	855	1997	1998	X	
SPEED-TRIPLE-T509	900	1997	1998	X	
DAYTONA-T595	950	1996	1998	X	
DAYTONA-T955I	955	1999	2001	X	
SPEED-TRIPLE	955	1999	2001	X	
SPRINT-RS	955	1999	2004	X	
SPRINT-ST	955	1998	2004	X	

dischi freno brake rotor

APPLICAZIONI PER CODICE DISCO / applications for rotor code

DK
DK135

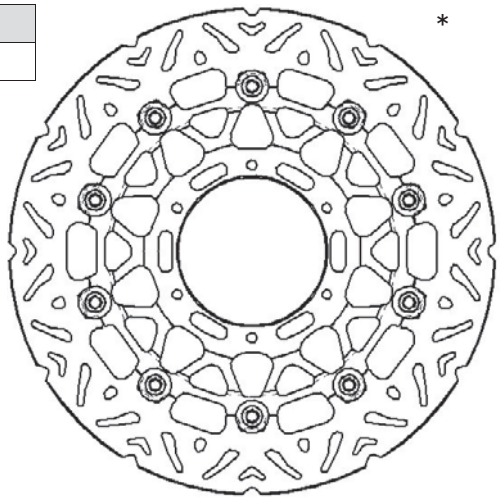

* **l'immagine del prodotto è puramente indicativa**
picture for illustrative purposes only

COLORI FASCIA FRENANTE / braking strip colours		
NERO	black	N

CODICE Reference	Ø ESTERNO Outer	Ø INTERNO Inner	SPESSORE Thickness	NR FORI No. holes	INTERASSE FORI Bolt patterns	Ø FORI Holes	CAMPANATURA Total height
DK135	320	94	5	6	110	6,5	12,5

CROSS REFERENCE		
ACCOSSATO	BREMBO	BRAKING
DK135	78B40877	STX41

CODICE OEM	
HONDA	/

DK135					
MODELLO Model	CC	DA From	A To	ANT. Front	POST. Rear
HONDA					
CBR-RR	1000	2006	2007	X	
VTR-SP02	1000	2002	2004	X	
VTR-SP1	1000	2000	2001	X	

DK
DK136

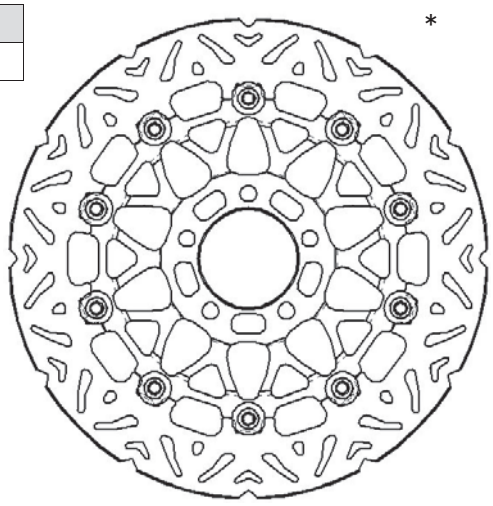

* **l'immagine del prodotto è puramente indicativa**
picture for illustrative purposes only

COLORI FASCIA FRENANTE / braking strip colours		
NERO	black	N
ROSSO	red	R

CODICE Reference	Ø ESTERNO Outer	Ø INTERNO Inner	SPESSORE Thickness	NR FORI No. holes	INTERASSE FORI Bolt patterns	Ø FORI Holes	CAMPANATURA Total height
DK136	320	72	5	5	90	8,5	/

CROSS REFERENCE		
ACCOSSATO	BREMBO	BRAKING
DK136	78B40880	ND

CODICE OEM	
DUCATI	49240851A

DK136					
MODELLO Model	CC	DA From	A To	ANT. Front	POST. Rear
DUCATI					
749	748	2003	2007	X	
749-DARK	748	2003	2007	X	
749-R	748	2003	2007	X	
749-S	748	2003	2007	X	
848	848	2008	2010	X	
848-SUPERBIKE	848	2013	→	X	
PANIGALE	899	2014	→	X	
999	998	2003	2007	X	
999-R	998	2003	2007	X	
999-S	998	2003	2007	X	
999-XEROX	999	2003	2007	X	
MONSTER-S4-1000-RS	1000	2006	2006	X	
MONSTER-S	1100	2009	2010	X	

ACCOSSATO

dischi freno brake rotor

APPLICAZIONI PER CODICE DISCO / applications for rotor code

DK
DK137

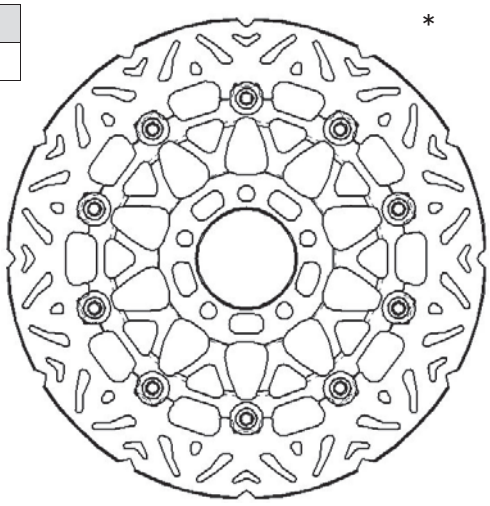

* **l'immagine del prodotto è puramente indicativa**
picture for illustrative purposes only

COLORI FASCIA FRENANTE / braking strip colours		
NERO	black	N

CODICE Reference	Ø ESTERNO Outer	Ø INTERNO Inner	SPESSORE Thickness	NR FORI No. holes	INTERASSE FORI Bolt patterns	Ø FORI Holes	CAMPANATURA Total height
DK137	320	78	5	5	100,5	10,5	17,5

CROSS REFERENCE		
ACCOSSATO	BREMBO	BRAKING
DK137	78B40881	STX83

CODICE OEM	
TRIUMPH	/

DK137					
MODELLO Model	CC	DA From	A To	ANT. Front	POST. Rear
TRIUMPH					
SPEED-TRIPLE	1050	2005	2006	X	
SPEED-TRIPLE-R	1050	2012	2013	X	
SPEED-TRIPLE-R-ABS	1050	2012	2013	X	
TIGER	1050	2007	2011	X	
TIGER-SE	1050	2010	2013	X	
TIGER-SPORT-ABS	1050	2013	→	X	

DK
DK138

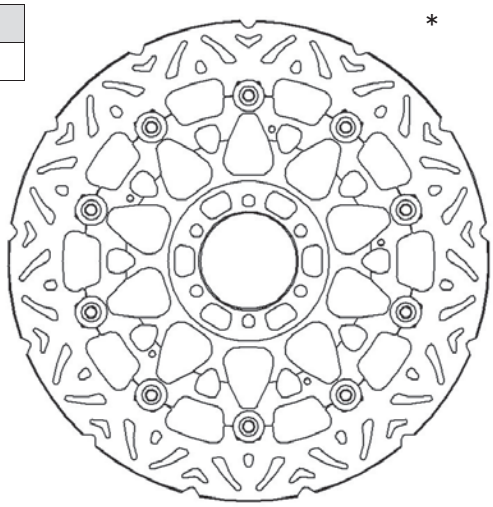

* **l'immagine del prodotto è puramente indicativa**
picture for illustrative purposes only

COLORI FASCIA FRENANTE / braking strip colours		
NERO	black	N
ROSSO	red	R

CODICE Reference	Ø ESTERNO Outer	Ø INTERNO Inner	SPESSORE Thickness	NR FORI No. holes	INTERASSE FORI Bolt patterns	Ø FORI Holes	CAMPANATURA Total height
DK138	320	64	4	6	80	8,5	/

CROSS REFERENCE		
ACCOSSATO	BREMBO	BRAKING
DK138	78B40885	ND

CODICE OEM	
DUCATI	49240291A

DK138					
MODELLO Model	CC	DA From	A To	ANT. Front	POST. Rear
DUCATI					
MONSTER-696	696	2013	→	X	
MONSTER-696-ABS	696	2013	→	X	
MONSTER-696-ANNIVERSARY/ABS	696	2013	→	X	
MONSTER-795	795	2012	2013	X	
MONSTER-795	795	2014	→	X	
MONSTER-795-ABS	795	2013	→	X	
MONSTER-795-ABS-CORSE-STRIPE	795	2014	→	X	

dischi freno brake rotor

APPLICAZIONI PER CODICE DISCO / applications for rotor code

DK
DK139

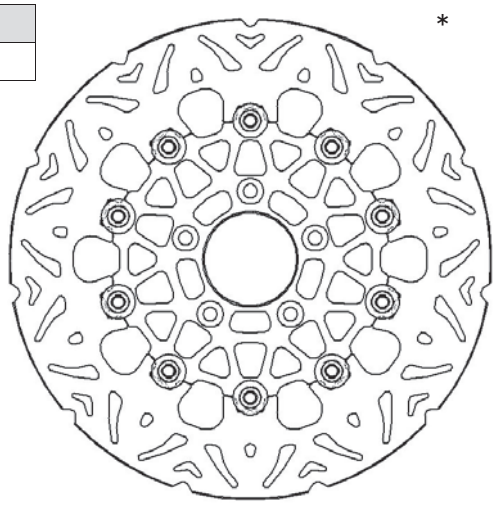

* **l'immagine del prodotto è puramente indicativa**
picture for illustrative purposes only

COLORI FASCIA FRENANTE / braking strip colours		
NERO	black	N
ROSSO	red	R

CODICE Reference	Ø ESTERNO Outer	Ø INTERNO Inner	SPESSORE Thickness	NR FORI No. holes	INTERASSE FORI Bolt patterns	Ø FORI Holes	CAMPANATURA Total height
DK139	320	80	5	5	101,5	8,5	/

CROSS REFERENCE		
ACCOSSATO	BREMBO	BRAKING
DK139	78B40889	ND

CODICE OEM	
MV AGUSTA	8000B3353

DK139					
MODELLO Model	CC	DA From	A To	ANT. Front	POST. Rear
MV AGUSTA					
F3-SERIE-ORO	675	2012	2013	X	
F3-AGO	800	2014	→	X	
F3-SERIE-ORO	800	2012	2013	X	
BRUTALE-R	910	2006	2008	X	
BRUTALE	920	2012	→	X	
F4	1000	2013	→	X	
F4-312-R	1000	2007	2008	X	
F4-FRECCE-TRICOLORI	1000	2010	2012	X	
F4-R	1000	2006	2007	X	
F4-R	1000	2010	2013	X	
F4-RC	1000	2016	→	X	
F4-RR	1000	2010	2013	X	
F4-S	1000	2010	2012	X	
BRUTALE	1078	2008	2009	X	
F4-312-R	1078	2007	2008	X	
BRUTALE-CORSA	1090	2014	→	X	
BRUTALE-RR	1090	2012	→	X	

DK
DK140

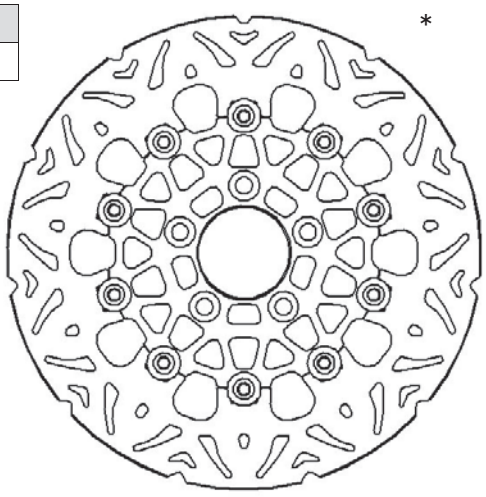

* **l'immagine del prodotto è puramente indicativa**
picture for illustrative purposes only

COLORI FASCIA FRENANTE / braking strip colours		
NERO	black	N

CODICE Reference	Ø ESTERNO Outer	Ø INTERNO Inner	SPESSORE Thickness	NR FORI No. holes	INTERASSE FORI Bolt patterns	Ø FORI Holes	CAMPANATURA Total height
DK140	285	62	5	4	79	10,5	/

CROSS REFERENCE		
ACCOSSATO	BREMBO	BRAKING
DK140	78B40892	ND

CODICE OEM	
BMW	/

DK140					
MODELLO Model	CC	DA From	A To	ANT. Front	POST. Rear
BMW					
R-65-RT	650	1985	1995	X	
R-80	800	1981	1995	X	
R-80-R	800	1991	1995	X	
R-80-RT	800	1983	1995	X	
R-100-GS	1000	1987	1995	X	
R-100-PD	1000	1991	1995	X	

ACCOSSATO

dischi freno brake rotor

APPLICAZIONI PER CODICE DISCO / applications for rotor code

DK
DK141

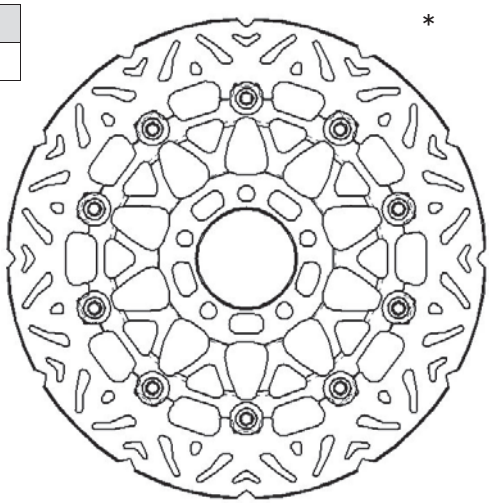

* **l'immagine del prodotto è puramente indicativa**
picture for illustrative purposes only

COLORI FASCIA FRENANTE / braking strip colours		
NERO	black	N
ROSSO	red	R

CODICE Reference	Ø ESTERNO Outer	Ø INTERNO Inner	SPESSORE Thickness	NR FORI No. holes	INTERASSE FORI Bolt patterns	Ø FORI Holes	CAMPANATURA Total height
DK141	320	80	4,5	5	101,5	8,5	/

CROSS REFERENCE		
ACCOSSATO	BREMBO	BRAKING
DK141	78B40893	ND

CODICE OEM	
MV AGUSTA	8000B4450

DK141					
MODELLO Model	CC	DA From	A To	ANT. Front	POST. Rear
MV AGUSTA					
BRUTALE	675	2013	→	X	
F3	675	2011	→	X	
F3-RC	675	2016	→	X	
BRUTALE	800	2013	→	X	
BRUTALE-RR	800	2015	→	X	
DRAGSTER	800	2014	→	X	
DRAGSTER-RR	800	2014	→	X	
DRAGSTER-RR-LH44	800	2015	→	X	
F3	800	2012	2013	X	
F3-RC	800	2016	→	X	
RIVALE	800	2013	→	X	
STRADALE	800	2015	→	X	
TURISMO-VELOCE	800	2014	→	X	
TURISMO-VELOCE-LUSSO	800	2014	→	X	

DK
DK142

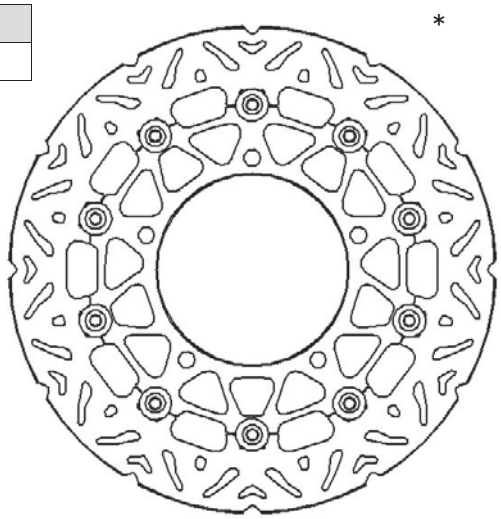

* **l'immagine del prodotto è puramente indicativa**
picture for illustrative purposes only

COLORI FASCIA FRENANTE / braking strip colours		
NERO	black	N

CODICE Reference	Ø ESTERNO Outer	Ø INTERNO Inner	SPESSORE Thickness	NR FORI No. holes	INTERASSE FORI Bolt patterns	Ø FORI Holes	CAMPANATURA Total height
DK142	320	132	4,5	6	150	8,5	0

CROSS REFERENCE		
ACCOSSATO	BREMBO	BRAKING
DK142	78B40894	STX33

CODICE OEM	
YAMAHA	1D2F581T0000
YAMAHA	3P62581T010
YAMAHA	5YU2581T0000

DK142					
MODELLO Model	CC	DA From	A To	ANT. Front	POST. Rear
YAMAHA					
XT-X	660	2004	2009	X	
YZF-R7	750	1999	2001	X	
XVS-MIDNIGHT-STAR	950	2009	→	X	
FJR-ABS	1300	2006	→	X	
MT-01	1670	2005	→	X	

dischi freno brake rotor

APPLICAZIONI PER CODICE DISCO / applications for rotor code

DK
DK143

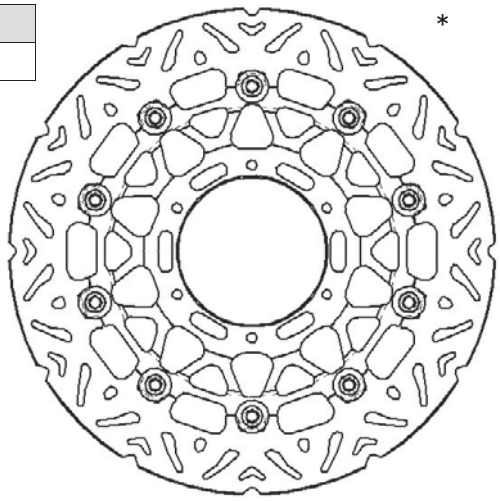

* **l'immagine del prodotto è puramente indicativa**
picture for illustrative purposes only

COLORI FASCIA FRENANTE / braking strip colours		
NERO	black	N

CODICE Reference	Ø ESTERNO Outer	Ø INTERNO Inner	SPESSORE Thickness	NR FORI No. holes	INTERASSE FORI Bolt patterns	Ø FORI Holes	CAMPANATURA Total height
DK143	300	105	5	6	120	6,5	/

CROSS REFERENCE		
ACCOSSATO	BREMBO	BRAKING
DK143	78B40896	ND

CODICE OEM	
BMW	/

DK143					
MODELLO Model	CC	DA From	A To	ANT. Front	POST. Rear
BMW					
F-650	650	1993	2001	X	
F-650-CS	650	2002	2007	X	
F-650-FL	650	1993	2000	X	
F-650-GS	650	2000	2007	X	
F-650-GS	650	2008	→	X	
F-650-GS-ABS	650	2000	2007	X	
F-650-GS-ABS	650	2008	→	X	
F-650-ST	650	1997	2001	X	
G-650-GS	650	2009	→	X	
G-650-XCHALLENGE	650	2007	2009	X	
G-650-XCOUNTRY	650	2007	2009	X	
F-700-GS	700	2013	→	X	
F-800-GS	800	2009	→	X	
F-800-GS-ADVENTURE	800	2014	→	X	

DK
DK144

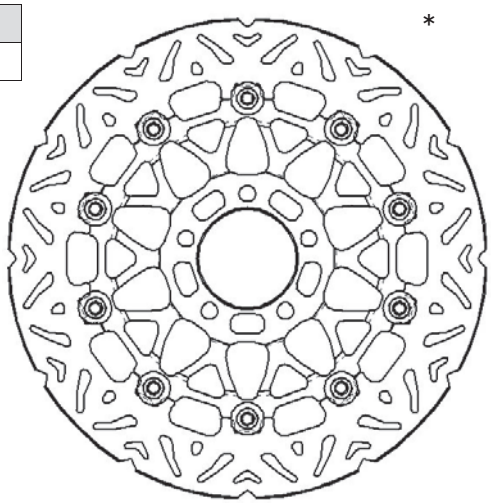

* **l'immagine del prodotto è puramente indicativa**
picture for illustrative purposes only

COLORI FASCIA FRENANTE / braking strip colours		
NERO	black	N

CODICE Reference	Ø ESTERNO Outer	Ø INTERNO Inner	SPESSORE Thickness	NR FORI No. holes	INTERASSE FORI Bolt patterns	Ø FORI Holes	CAMPANATURA Total height
DK144	310	64	5	5	86	10,5	/

CROSS REFERENCE		
ACCOSSATO	BREMBO	BRAKING
DK144	78B408A0	ND

CODICE OEM	
SUZUKI	59210-27E50-000
SUZUKI	59210-01D40-000

DK144					
MODELLO Model	CC	DA From	A To	ANT. Front	POST. Rear
SUZUKI					
GS-E	500	1989	2008	X	
RF-R	900	1994	1998	X	
GSF-BANDIT	1200	1997	2005	X	
GSF-BANDIT-S	1200	1997	2005	X	

ACCOSSATO

dischi freno brake rotor

APPLICAZIONI PER CODICE DISCO / applications for rotor code

DK
DK145

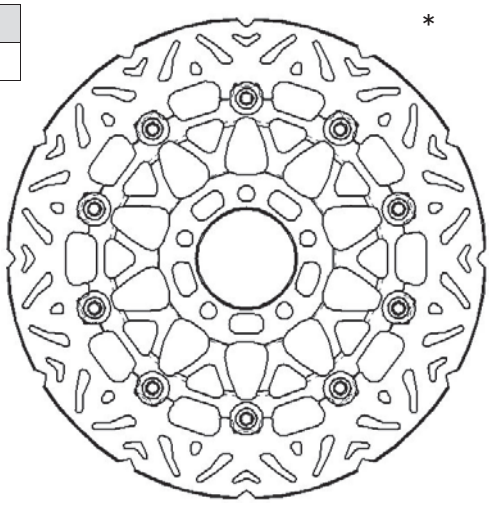

* **l'immagine del prodotto è puramente indicativa**
picture for illustrative purposes only

COLORI FASCIA FRENANTE / braking strip colours		
NERO	black	N

CODICE Reference	Ø ESTERNO Outer	Ø INTERNO Inner	SPESSORE Thickness	NR FORI No. holes	INTERASSE FORI Bolt patterns	Ø FORI Holes	CAMPANATURA Total height
DK145	320	61	5	5	81	10,5	13,5

CROSS REFERENCE		
ACCOSSATO	BREMBO	BRAKING
DK145	78B408A1	STX09

CODICE OEM	
KAWASAKI	410801351FF
KAWASAKI	410801408FF
KAWASAKI	4108014085C

DK145					
MODELLO Model	CC	DA From	A To	ANT. Front	POST. Rear
KAWASAKI					
ZX-7R	750	1996	2002	X	
ZX-7-RR	750	1993	2004	X	
ZXR	750	1991	1995	X	
ZX-9R	900	1994	1997	X	
ZX-9R	900	2002	2004	X	
ZZE	1100	1993	2001	X	
ZX12R-NINJA	1200	2000	2004	X	
ZZR	1200	2002	2004	X	
VN	1500	2002	2004	X	
M1600	1600	2004	2005	X	
VN	1600	2004	2008	X	

DK
DK146

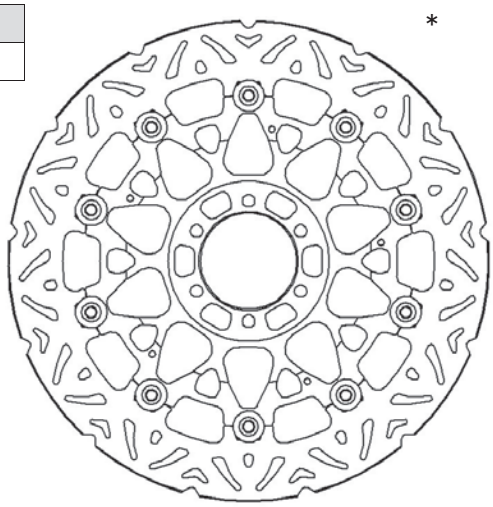

* **l'immagine del prodotto è puramente indicativa**
picture for illustrative purposes only

COLORI FASCIA FRENANTE / braking strip colours		
NERO	black	N

CODICE Reference	Ø ESTERNO Outer	Ø INTERNO Inner	SPESSORE Thickness	NR FORI No. holes	INTERASSE FORI Bolt patterns	Ø FORI Holes	CAMPANATURA Total height
DK146	298	64	5	6	80	8,5	/

CROSS REFERENCE		
ACCOSSATO	BREMBO	BRAKING
DK146	78B408A2	ND

CODICE OEM	
MOTO MORINI	M12000007104
YAMAHA	4HM2581T1100

DK146					
MODELLO Model	CC	DA From	A To	ANT. Front	POST. Rear
MOTO MORINI					
GRANPASSO	1200	2008	→	X	
SCRAMBLER	1200	2009	→	X	
YAMAHA					
FZR	600	1989	1995	X	
FZR-R	600	1994	1995	X	
FZ-GENESIS	750	1989	1992	X	
TDM	850	1991	2001	X	
TRX	850	1995	2000	X	
FJ	1200	1988	1995	X	

dischi freno brake rotor

APPLICAZIONI PER CODICE DISCO / applications for rotor code

DK
DK147

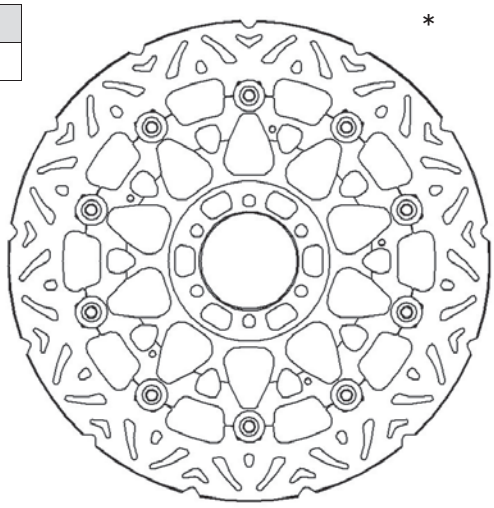

* **l'immagine del prodotto è puramente indicativa**
picture for illustrative purposes only

COLORI FASCIA FRENANTE / braking strip colours		
NERO	black	N

CODICE Reference	Ø ESTERNO Outer	Ø INTERNO Inner	SPESSORE Thickness	NR FORI No. holes	INTERASSE FORI Bolt patterns	Ø FORI Holes	CAMPANATURA Total height
DK147	296	58	5	6	74	6,5	/

CROSS REFERENCE		
ACCOSSATO	BREMBO	BRAKING
DK147	78B408A3	ND

CODICE OEM	
HONDA	/

DK147					
MODELLO Model	CC	DA From	A To	ANT. Front	POST. Rear
HONDA					
RS-R	125	1991	2005	X	
CRF-R	250	1997	→	X	
HORNET	250	1997	→	X	
RS-R	250	1990	1997	X	
CB-N	400	1982	1988	X	
CB-V-TECH	400	2011	→	X	
CBR-F	400	1985	1987	X	
CBR-RR	400	1989	1990	X	
CBR-RR	400	1994	1996	X	
VFR-R	400	1989	1991	X	
CBR-F	600	1995	1998	X	
VFR-F	750	1994	1997	X	
CBR-RR	900	1994	1997	X	
VTR-F	1000	1997	2007	X	

DK
DK148

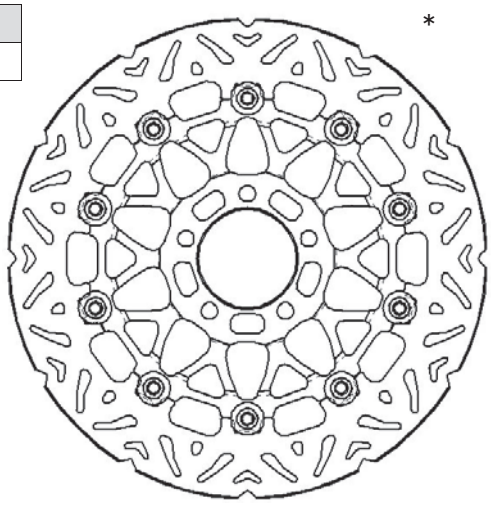

* **l'immagine del prodotto è puramente indicativa**
picture for illustrative purposes only

COLORI FASCIA FRENANTE / braking strip colours		
NERO	black	N
ROSSO	red	R

CODICE Reference	Ø ESTERNO Outer	Ø INTERNO Inner	SPESSORE Thickness	NR FORI No. holes	INTERASSE FORI Bolt patterns	Ø FORI Holes	CAMPANATURA Total height
DK148	330	72	5	5	90	8,6	/

CROSS REFERENCE		
ACCOSSATO	BREMBO	BRAKING
DK148	78B408A4	ND

CODICE OEM	
DUCATI	49241011A

DK148					
MODELLO Model	CC	DA From	A To	ANT. Front	POST. Rear
DUCATI					
MONSTER-R	1200	2015	→	X	
MONSTER-S	1200	2014	→	X	
MONSTER-S-STRIPE	1200	2015	→	X	
MULTISTRADA-S	1200	2015	→	X	
MULTISTRADA-S-D-AIR	1200	2015	→	X	

ACCOSSATO

dischi freno brake rotor

APPLICAZIONI PER CODICE DISCO / applications for rotor code

DK
DK149

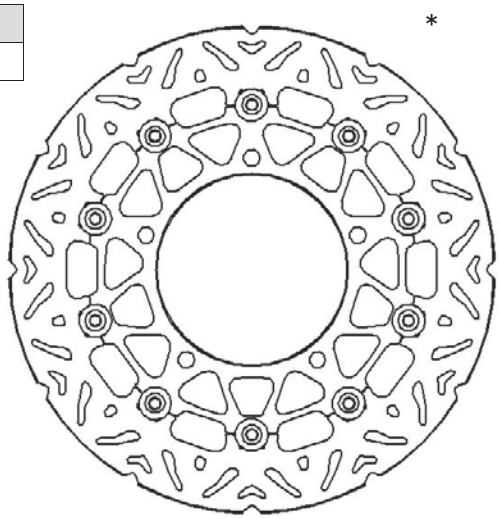

* **l'immagine del prodotto è puramente indicativa**
picture for illustrative purposes only

COLORI FASCIA FRENANTE / braking strip colours		
NERO	black	N

CODICE Reference	Ø ESTERNO Outer	Ø INTERNO Inner	SPESSORE Thickness	NR FORI No. holes	INTERASSE FORI Bolt patterns	Ø FORI Holes	CAMPANATURA Total height
DK149	300	124,5	5	6	143	6,6	/

CROSS REFERENCE		
ACCOSSATO	BREMBO	BRAKING
DK149	78B408A5	ND

CODICE OEM	
KTM	/

DK149					
MODELLO Model	CC	DA From	A To	ANT. Front	POST. Rear
KTM					
ENDURO-R	690	2014	→	X	
LC8-ADVENTURE-R	990	2010	2012	X	
LC8-ADVENTURE-S	990	2006	2008	X	
LC8-ADVENTURE-S/ABS	990	2006	2008	X	

DK
DK150

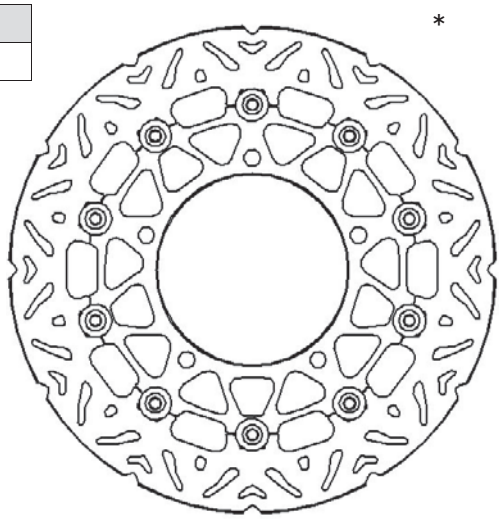

* **l'immagine del prodotto è puramente indicativa**
picture for illustrative purposes only

COLORI FASCIA FRENANTE / braking strip colours		
NERO	black	N

CODICE Reference	Ø ESTERNO Outer	Ø INTERNO Inner	SPESSORE Thickness	NR FORI No. holes	INTERASSE FORI Bolt patterns	Ø FORI Holes	CAMPANATURA Total height
DK150	240	110	5	6	125	6,6	0

CROSS REFERENCE		
ACCOSSATO	BREMBO	BRAKING
DK150	78B408A6	ND

CODICE OEM	
KTM	/

DK150					
MODELLO Model	CC	DA From	A To	ANT. Front	POST. Rear
KTM					
LC8-ADVENTURE-R	990	2010	2012		X

dischi freno brake rotor

APPLICAZIONI PER CODICE DISCO / applications for rotor code

DK
DK151

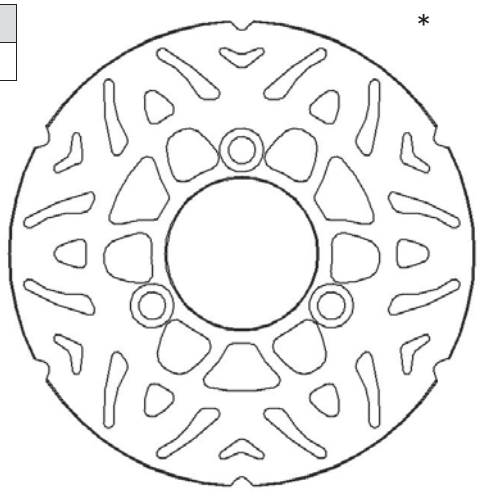

* l'immagine del prodotto è puramente indicativa
picture for illustrative purposes only

CODICE Reference	Ø ESTERNO Outer	Ø INTERNO Inner	SPESSORE Thickness	NR FORI No. holes	INTERASSE FORI Bolt patterns	Ø FORI Holes	CAMPANATURA Total height
DK151	190	70	4,5	3	89,5	8,5	0

CROSS REFERENCE		
ACCOSSATO	BREMBO	BRAKING
DK151	68B40719	ND

CODICE OEM	
APRILIA	AP8133601

DK151					
MODELLO Model	CC	DA From	A To	ANT. Front	POST. Rear
APRILIA					
SR LC	50	1994	1996		X
SR R FACTORY	50	2005	2008	X	
SR STREET	50	2003	2012	X	
ATLANTIC	125	2003	2011		X
ATLANTIC	200	2003	2004		X
ATLANTIC	250	2004	2006		X
ATLANTIC	300	2010	2011		X
ATLANTIC SPRINT	400	2006	→		X
ATLANTIC SPRINT	500	2005	2005		X

DK
DK152

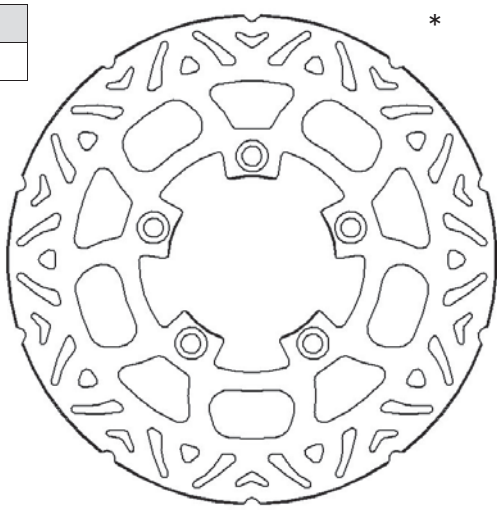

* l'immagine del prodotto è puramente indicativa
picture for illustrative purposes only

CODICE Reference	Ø ESTERNO Outer	Ø INTERNO Inner	SPESSORE Thickness	NR FORI No. holes	INTERASSE FORI Bolt patterns	Ø FORI Holes	CAMPANATURA Total height
DK152	220	96	4	5	115	6,25	0

CROSS REFERENCE		
ACCOSSATO	BREMBO	BRAKING
DK152	68B40736	RF8511

CODICE OEM	
APRILIA	AP8113800
ATALA	/

DK152					
MODELLO Model	CC	DA From	A To	ANT. Front	POST. Rear
APRILIA					
SCARABEO	50	1994	1997	X	
SCARABEO	70	1994	1998	X	
SCARABEO	125	1998	1998	X	
SCARABEO	150	1998	1998	X	
LEONARDO	250	1999	2004		X
ATLANTIC	500	2001	2005		X
ATLANTIC SPRINT	500	2006	2008		X
SCARABEO	500	2003	2006		X
ATALA					
CAROSELLO-AT-15	50	1997	→	X	

ACCOSSATO

dischi freno brake rotor

APPLICAZIONI PER CODICE DISCO / applications for rotor code

DK
DK153

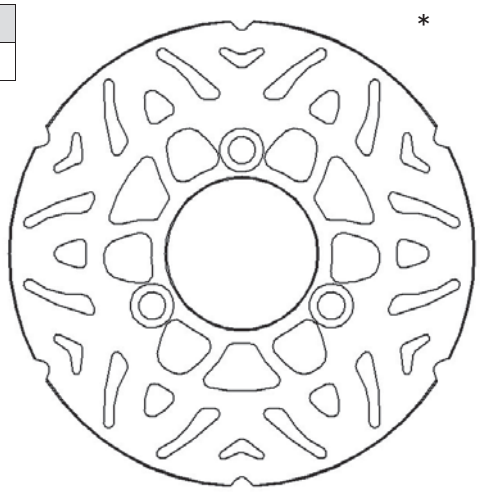

* l'immagine del prodotto è puramente indicativa
picture for illustrative purposes only

CODICE Reference	Ø ESTERNO Outer	Ø INTERNO Inner	SPESSORE Thickness	NR FORI No. holes	INTERASSE FORI Bolt patterns	Ø FORI Holes	CAMPANATURA Total height
DK153	220	88	4,5	3	110	10,5	0

CROSS REFERENCE		
ACCOSSATO	BREMBO	BRAKING
DK153	68B40743	ND

CODICE OEM	
HONDA	/

DK153					
MODELLO Model	CC	DA From	A To	ANT. Front	POST. Rear
HONDA					
CBR-RR	400	1989	1990		X
NSR	400	1985	1988		X
VFR-R	400	1986	1988		X
CBR-F	600	1987	1990		X

DK
DK154

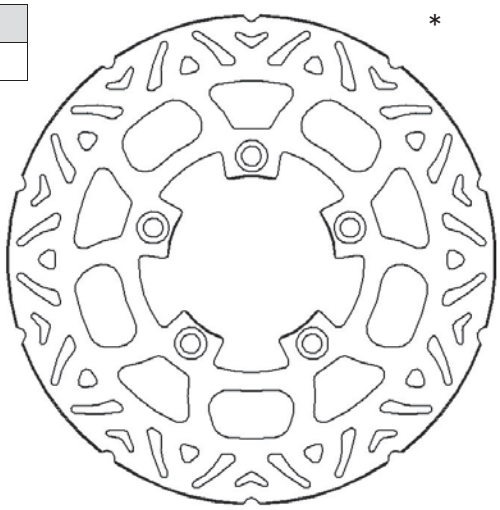

* l'immagine del prodotto è puramente indicativa
picture for illustrative purposes only

CODICE Reference	Ø ESTERNO Outer	Ø INTERNO Inner	SPESSORE Thickness	NR FORI No. holes	INTERASSE FORI Bolt patterns	Ø FORI Holes	CAMPANATURA Total height
DK154	220	89	5	5	110	10,5	0

CROSS REFERENCE		
ACCOSSATO	BREMBO	BRAKING
DK154	68B40744	ND

CODICE OEM	
SUZUKI	69211-18G00-000

DK154					
MODELLO Model	CC	DA From	A To	ANT. Front	POST. Rear
SUZUKI					
GSX-R	600	1997	2003		X
GSX-R	600	2004	2005		X
GSX-R	600	2006	2007		X
GSX-R	600	2008	→		X
SV	650	2003	2010		X
SV-S	650	2003	2010		X
GSX-R	750	1985	1987		X
GSX-R	750	2004	2005		X
GSX-R	750	2006	2007		X
GSX-R	750	2008	→		X
GSX-R	750	1996	2003		X
GSX-R	1000	2001	2002		X
GSX-R	1000	2003	2004		X
GSX-R	1000	2005	2008		X
GSX-R	1000	2009	2014		X
SV	1000	2003	2007		X
SV-S	1000	2003	2007		X
TL-R	1000	1998	2003		X
TL-S	1000	1997	2001		X
GSX-R	1100	1986	1988		X

dischi freno brake rotor

APPLICAZIONI PER CODICE DISCO / applications for rotor code

DK
DK155

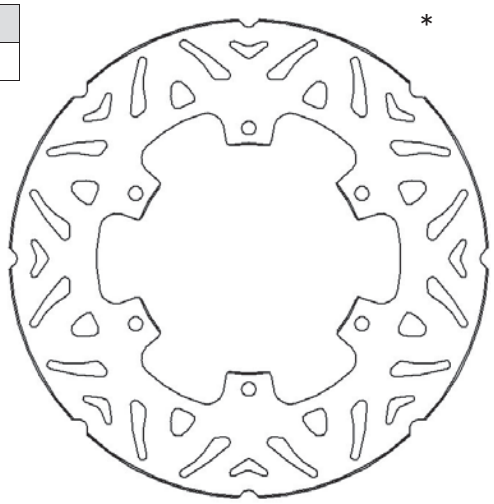

* l'immagine del prodotto è puramente indicativa
picture for illustrative purposes only

CODICE Reference	Ø ESTERNO Outer	Ø INTERNO Inner	SPESSORE Thickness	NR FORI No. holes	INTERASSE FORI Bolt patterns	Ø FORI Holes	CAMPANATURA Total height
DK155	220	100	4,5	6	116	6,5	0

CROSS REFERENCE		
ACCOSSATO	BREMBO	BRAKING
DK155	68B40746	ND

CODICE OEM	
KAWASAKI	410801384
KAWASAKI	410801528

DK155					
MODELLO Model	CC	DA From	A To	ANT. Front	POST. Rear
KAWASAKI					
KX	125	1988	2002		X
KDX	200	2004	2006		X
KDX	220	2003	2005		X
KX	250	1987	2002		X
KLX	300	1996	2007		X
KX	500	1990	2004		X
KLX-R	650	1993	2003		X

DK
DK156

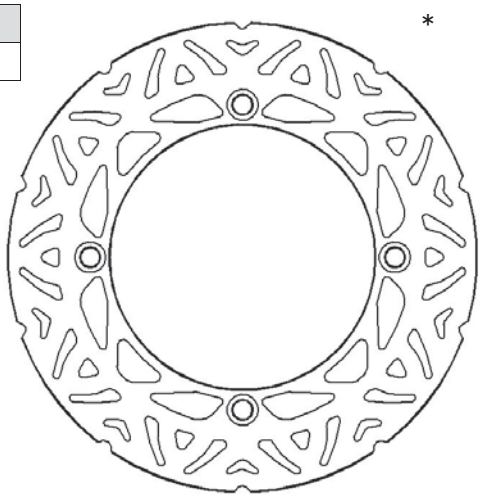

* l'immagine del prodotto è puramente indicativa
picture for illustrative purposes only

CODICE Reference	Ø ESTERNO Outer	Ø INTERNO Inner	SPESSORE Thickness	NR FORI No. holes	INTERASSE FORI Bolt patterns	Ø FORI Holes	CAMPANATURA Total height
DK156	220	105	4	4	125	6,2	0

CROSS REFERENCE		
ACCOSSATO	BREMBO	BRAKING
DK156	68B40748	ND

CODICE OEM	
HM	KW1308025
HONDA	/

DK156					
MODELLO Model	CC	DA From	A To	ANT. Front	POST. Rear
HM					
CRE-F-X	125	2008	→		X
CRM-F-X	125	2008	→		X
HONDA					
XLR-BAJA	250	1988	1991		X
FMX	650	2005	2006	X	
NX-DOMINATOR	650	1993	2004		X
SLR	650	1997	1999		X
VIGOR-FX	650	1999	2001		X

ACCOSSATO

dischi freno brake rotor

APPLICAZIONI PER CODICE DISCO / applications for rotor code

DK
DK157

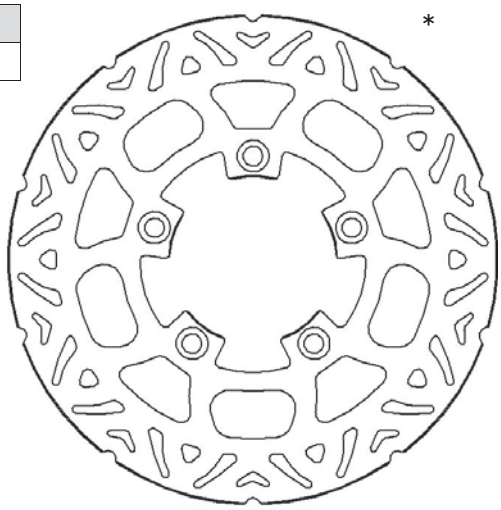

* l'immagine del prodotto è puramente indicativa
picture for illustrative purposes only

CODICE Reference	Ø ESTERNO Outer	Ø INTERNO Inner	SPESSORE Thickness	NR FORI No. holes	INTERASSE FORI Bolt patterns	Ø FORI Holes	CAMPANATURA Total height
DK157	220	105	5	5	125	10,5	0

CROSS REFERENCE		
ACCOSSATO	BREMBO	BRAKING
DK157	68B40750	ND

CODICE OEM	
YAMAHA	5SL2582W0000

DK157					
MODELLO Model	CC	DA From	A To	ANT. Front	POST. Rear
YAMAHA					
YZF-R6	600	2003	2004		X
YZF-R6	600	2005	→		X
YZF-R1	1000	2004	2006		X
YZF-R1	1000	2007	2014		X
YZF-R1	1000	2015	→		X
YZF-R1-SP	1000	2006	→		X
YZF-R1M-SPECIAL-EDITION	1000	2015	→		X

DK
DK158

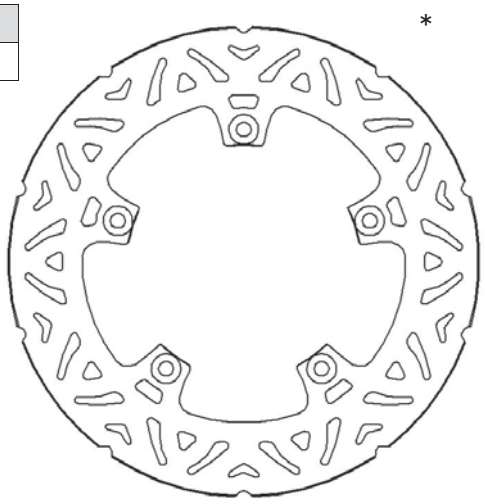

* l'immagine del prodotto è puramente indicativa
picture for illustrative purposes only

CODICE Reference	Ø ESTERNO Outer	Ø INTERNO Inner	SPESSORE Thickness	NR FORI No. holes	INTERASSE FORI Bolt patterns	Ø FORI Holes	CAMPANATURA Total height
DK158	226	126	4,5	5	140	6,5	0

CROSS REFERENCE		
ACCOSSATO	BREMBO	BRAKING
DK158	68B40751	ND

CODICE OEM	
PEUGEOT	/

DK158					
MODELLO Model	CC	DA From	A To	ANT. Front	POST. Rear
PEUGEOT					
GEO-RS	125	2007	2008		X
GEOPOLIS-RS	125	2010	→		X
GEO-RS	250	2006	2008		X
SATELIS	250	2006	→		X
SATELIS	300	2014	→		X
GEOPOLIS-GT	400	2014	→		X
GEOPOLIS-RS	400	2007	2008		X

dischi freno brake rotor

APPLICAZIONI PER CODICE DISCO / applications for rotor code

DK
DK159

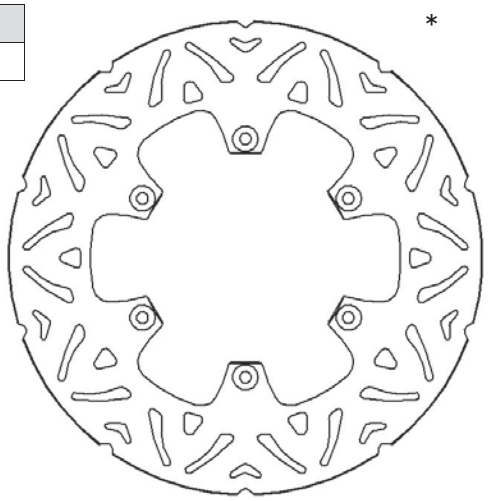

* l'immagine del prodotto è puramente indicativa
picture for illustrative purposes only

CODICE Reference	Ø ESTERNO Outer	Ø INTERNO Inner	SPESSORE Thickness	NR FORI No. holes	INTERASSE FORI Bolt patterns	Ø FORI Holes	CAMPANATURA Total height
DK159	220	110	5	6	124	6,5	0

CROSS REFERENCE			CODICE OEM	
ACCOSSATO	BREMBO	BRAKING	APRILIA	AP8113462
DK159	68B40753	ND	APRILIA	AP8113628
			MZ	/

DK159

MODELLO Model	CC	DA From	A To	ANT. Front	POST. Rear
APRILIA					
MX	125	2004	2007		X
PEGASO	125	1989	1999		X
RS EXTREMA	125	1989	1991		X
RS EXTREMA	125	1992	1997		X
RS REPLICA	125	1992	1997		X
TUAREG RALLY	125	1989	1992	X	
PEGASO	600	1989	1991		X
CUBE	650	1993	2000		X
PEGASO	650	1991	1992		X
PEGASO	650	1993	2000		X
MZ					
1000-S	1000	2001	→		X
1000-S	1000	2003	→		X

DK
DK160

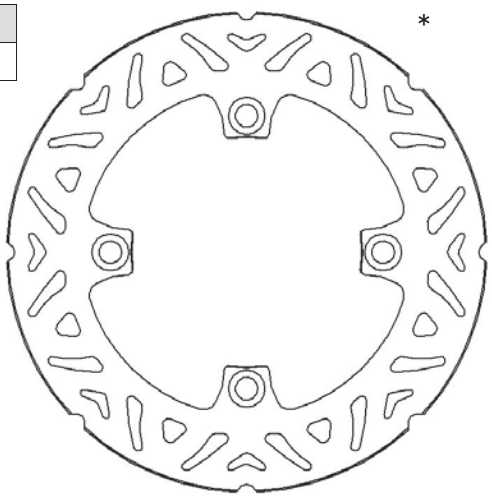

* l'immagine del prodotto è puramente indicativa
picture for illustrative purposes only

CODICE Reference	Ø ESTERNO Outer	Ø INTERNO Inner	SPESSORE Thickness	NR FORI No. holes	INTERASSE FORI Bolt patterns	Ø FORI Holes	CAMPANATURA Total height
DK160	220	112	4	4	130	9,5	0

CROSS REFERENCE			CODICE OEM	
ACCOSSATO	BREMBO	BRAKING	HUSQVARNA	8B00H4977
DK160	68B40754	ND		

DK160

MODELLO Model	CC	DA From	A To	ANT. Front	POST. Rear
HUSQVARNA					
CR	125	2000	2004		X
SM	125	2000	→		X
SM-S	125	2003	2012		X
SM-S4	125	2010	2011		X
TE	125	2010	2012		X
WR	125	2000	2005		X
WR-E	125	2000	2009		X
CR	250	2000	2004		X
TE	250	2004	2006		X
WR	250	2000	2006		X
WR	300	2009	→		X
WR	360	2000	2004		X
TE	410	2000	2001		X
SMR	450	2003	2009		X
TC	450	2002	2003		X
TE	450	2000	2006		X
SMR	510	2005	2005		X
TC	510	2002	2004		X
TE	510	2002	2004		X
TE-CENTENNIAL	510	2004	→		X
SMR	570	2000	→		X
SMR	570	2001	2004		X
TC	570	2000	2003		X
TE	570	2001	2004		X
TC	610	2000	2004		X
TE	610	2000	2004		X
TE-E	610	2005	2007		X
SMR	630	2003	2005		X
TE	630	2010	2012		X

ACCOSSATO

dischi freno brake rotor

APPLICAZIONI PER CODICE DISCO / applications for rotor code

DK
DK161

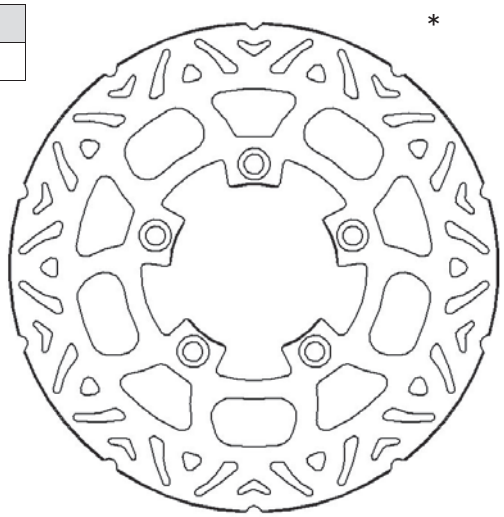

* l'immagine del prodotto è puramente indicativa
picture for illustrative purposes only

CODICE Reference	Ø ESTERNO Outer	Ø INTERNO Inner	SPESSORE Thickness	NR FORI No. holes	INTERASSE FORI Bolt patterns	Ø FORI Holes	CAMPANATURA Total height
DK161	240	102	5	5	120	8,5	0

CROSS REFERENCE		
ACCOSSATO	BREMBO	BRAKING
DK161	68B40760	ND

CODICE OEM	
APRILIA	856775
APRILIA	B044278
PIAGGIO	58547R

DK161					
MODELLO Model	CC	DA From	A To	ANT. Front	POST. Rear
APRILIA					
PEGASO STRADA	650	2005	2009		X
DORSODURO	750	2008	→		X
DORSODURO ABS	750	2008	→		X
DORSODURO FACTORY	750	2010	→		X
SHIVER	750	2007	→		X
SHIVER-GT-ABS	750	2009	→		X
SHIVER-SL	750	2007	2009		X
CAPONORD-RALLY	1200	2015	→		X
PIAGGIO					
BEVERLY-I.E.-GT	125	2010	→		X
BEVERLY-I.E.	300	2010	→		X
BEVERLY-S	300	2011	→		X
BEVERLY-I.E.-GT	350	2011	→		X
BEVERLY-S	350	2014	→		X

DK
DK162

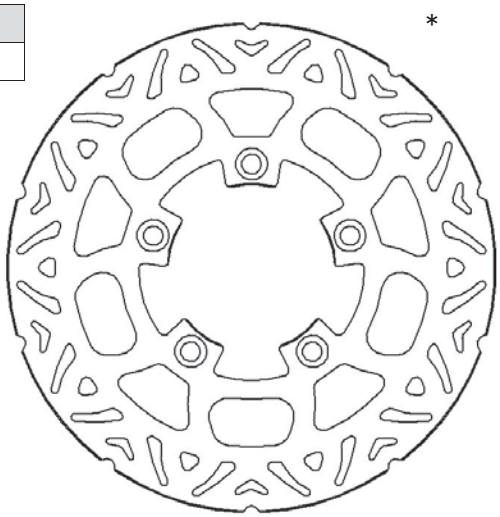

* l'immagine del prodotto è puramente indicativa
picture for illustrative purposes only

CODICE Reference	Ø ESTERNO Outer	Ø INTERNO Inner	SPESSORE Thickness	NR FORI No. holes	INTERASSE FORI Bolt patterns	Ø FORI Holes	CAMPANATURA Total height
DK162	240	107	4	5	125	8,5	0

CROSS REFERENCE		
ACCOSSATO	BREMBO	BRAKING
DK162	68B40768	ND

CODICE OEM	
DUCATI	49240771A

DK162					
MODELLO Model	CC	DA From	A To	ANT. Front	POST. Rear
DUCATI					
749	748	2003	2007		X
749-DARK	748	2003	2007		X
749-R	748	2003	2007		X
749-S	748	2003	2007		X
999	998	2003	2007		X
999-R	998	2003	2007		X
999-S	998	2003	2007		X
999-XEROX	999	2003	2007		X
DESMOSEDICI-RR	1000	2008	→		X

dischi freno brake rotor

APPLICAZIONI PER CODICE DISCO / applications for rotor code

DK
DK163

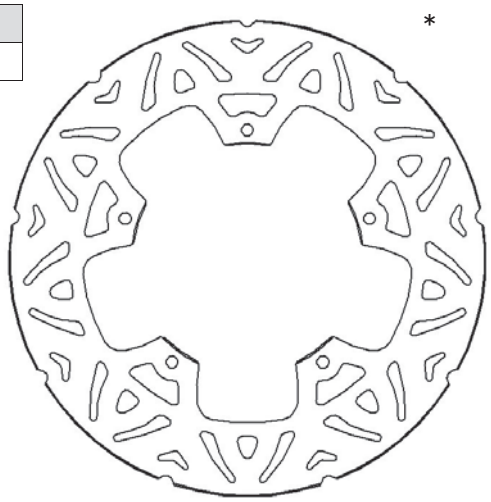

* l'immagine del prodotto è puramente indicativa
picture for illustrative purposes only

CODICE Reference	Ø ESTERNO Outer	Ø INTERNO Inner	SPESSORE Thickness	NR FORI No. holes	INTERASSE FORI Bolt patterns	Ø FORI Holes	CAMPANATURA Total height
DK163	240	125	5	5	140	6,5	0

CROSS REFERENCE		
ACCOSSATO	BREMBO	BRAKING
DK163	68B40777	ND

CODICE OEM	
APRILIA	AP8133627
APRILIA	852437
GILERA	56498R
PIAGGIO	56498R

DK163					
MODELLO Model	CC	DA From	A To	ANT. Front	POST. Rear
APRILIA					
SR REPLICA	125	1999	2001		X
SCARABEO	250	2004	2005		X
SCARABEO I.E.	250	2006	2009		X
LEONARDO ST	300	2005	2006		X
SCARABEO I.E.	300	2009	→		X
SCARABEO SPECIAL	300	2009	→		X
SR MAX	300	2010	→		X
SCARABEO I.E.	400	2006	→		X
SCARABEO URBAN	400	2006	2008		X
SCARABEO CLASSIC	500	2010	→		X
SCARABEO GT ABS	500	2006	→		X
SCARABEO I.E.	500	2006	→		X
SCARABEO URBAN	500	2006	2011		X
GILERA					
NEXUS	125	2007	2009		X
NEXUS-IE	125	2010	→		X
RUNNER-VXR	200	2005	2008		X

DK163					
MODELLO Model	CC	DA From	A To	ANT. Front	POST. Rear
NEXUS	250	2006	2008		X
NEXUS	300	2008	→		X
FUOCO-I.E.	500	2007	2011		X
NEXUS	500	2004	2013		X
PIAGGIO					
MP3	125	2007	2008		X
MP3-HYBRID	125	2009	2010		X
MP3-IE	125	2008	2009		X
X-EVO	125	2007	→		X
X10-I.E.	125	2012	→		X
X7-EURO3	125	2008	2009		X
X7-EVO-IE-EURO3	125	2009	2010		X
SUPER-HEXAGON-GTX-12"	125	2001	2003	X	
SUPER-HEXAGON-GTX-12"	180	2001	2003	X	
MP3	250	2006	2008		X
MP3-LT	250	2009	→		X
MP3-MIC	250	2008	2009		X
X-EVO	250	2007	2011		X
X7	250	2008	2009		X
MP3-LT-BUSINESS-I.E.	300	2013	→		X
MP3-LT-HYBRID-I.E.	300	2010	→		X
MP3-LT-I.E.	300	2010	2011		X
MP3-LT-SPORT-I.E.	300	2009	2010		X
MP3-MIC-I.E.	300	2010	→		X
MP3-TOURING	300	2011	→		X
MP3-YOURBAN	300	2011	2014		X
MP3-YOURBAN-ie	300	2015	→		X
MP3-YOURBAN-LT	300	2013	→		X
MP3-YOURBAN-SPORT-I.E.	300	2013	→		X
MP3-YOURBAN-SPORT-LT-I.E.	300	2013	→		X
X7-EVO-I.E.	300	2009	2011		X
X10-I.E.	350	2012	→		X
MP3	400	2007	2008		X
MP3-LT	400	2009	2010		X
MP3-LT-I.E.	400	2009	2010		X
MP3-LT-SPORT	400	2009	2010		X
MP3-LT-SPORT-I.E.	400	2009	2010		X
MP3-MIC	400	2008	2009		X
X-EVO	400	2007	2011		X
BEVERLY	500	2002	2006		X
BEVERLY-CRUISER	500	2007	2012		X
BEVERLY-EURO3	500	2006	2009		X
MP3-T-BUSINESS-I.E.	500	2013	→		X
MP3-SPORT	500	2011	→		X
MP3-TOURING-IE	500	2012	→		X
NEXUS-IE-SP	500	2006	2008		X
X10	500	2012	→		X
X9	500	2001	2002		X
X9-EVOLUTION	500	2003	2007		X
X9-EVOLUTION-ABS	500	2006	2007		X

ACCOSSATO

dischi freno brake rotor

APPLICAZIONI PER CODICE DISCO / applications for rotor code

DK
DK164

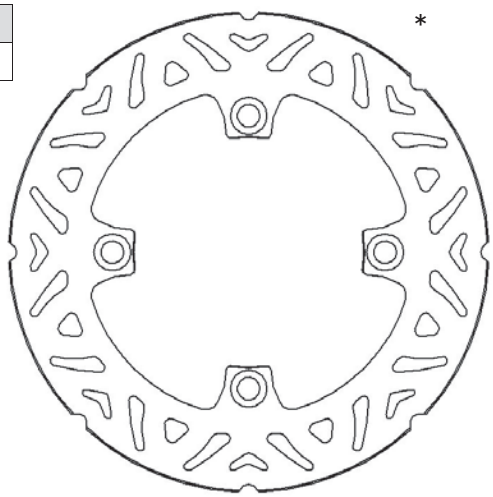

*

CODICE Reference	Ø ESTERNO Outer	Ø INTERNO Inner	SPESSORE Thickness	NR FORI No. holes	INTERASSE FORI Bolt patterns	Ø FORI Holes	CAMPANATURA Total height
DK164	240	100,5	4,5	4	120	10,5	0

CROSS REFERENCE		
ACCOSSATO	BREMBO	BRAKING
DK164	68B40779	ND

CODICE OEM	
KAWASAKI	410801255FB
KAWASAKI	410800025FB
KAWASAKI	410801177CM

DK164					
MODELLO Model	CC	DA From	A To	ANT. Front	POST. Rear
KAWASAKI					
ZXR	400	1991	2002		X
ZR-ZEPHYR	550	1993	2001		X
ZZR	600	1993	2006		X
GPX-R	750	1986	1990		X
ZR-7	750	1999	2003		X
ZR-7S	750	1999	2003		X

*** l'immagine del prodotto è puramente indicativa**
picture for illustrative purposes only

DK
DK165

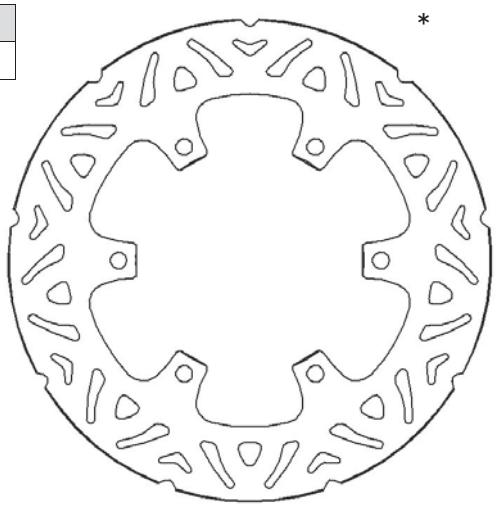

*

*** l'immagine del prodotto è puramente indicativa**
picture for illustrative purposes only

CODICE Reference	Ø ESTERNO Outer	Ø INTERNO Inner	SPESSORE Thickness	NR FORI No. holes	INTERASSE FORI Bolt patterns	Ø FORI Holes	CAMPANATURA Total height
DK165	240	110	5	6	124	6,5	0

CROSS REFERENCE		
ACCOSSATO	BREMBO	BRAKING
DK165	68B40781	BW05RI

CODICE OEM	
APRILIA	AP8113486
BENELLI	R180272105000
BMW	/
HUSQVARNA	2345314

DK165					
MODELLO Model	CC	DA From	A To	ANT. Front	POST. Rear
APRILIA					
CUBE	650	2001	→		X

DK165					
MODELLO Model	CC	DA From	A To	ANT. Front	POST. Rear
PEGASO FACTORY	650	2007	2009		X
PEGASO I.E.	650	2001	2004		X
PEGASO TRAIL	650	2005	2008		X
BENELLI					
BN-302	300	2014	→		X
BN	600	2014	→		X
BN-GT	600	2014	→		X
TNT-CENTURY-RACER	899	2011	→		X
TRE-899-K	899	2011	→		X
TNT	1130	2004	→		X
TNT	1130	2005	2006		X
TNT-CAFE'-RACER	1130	2005	2007		X
TNT-CENTURY-RACER	1130	2011	→		X
TNT-R-160	1130	2011	→		X
TNT-RS	1130	2005	2006		X
TNT-SPORT	1130	2005	→		X
TNT-TITANIUM	1130	2005	2007		X
TORNADO-TRE	1130	2006	→		X
TORNADO-TRE-R	1130	2013	→		X
TRE-K	1130	2006	2007		X
TRE-K	1130	2011	→		X
TRE-K-AMAZONAS	1130	2013	→		X
BMW					
F-650	650	1993	2001		X
F-650-CS	650	2002	2007		X
F-650-DAKAR	650	2000	2002		X
F-650-FL	650	1993	2000		X
F-650-GS	650	2000	2007		X
F-650-GS-ABS	650	2000	2007		X
F-650-GS-ABS	650	2008	→		X
F-650-ST	650	1997	2001		X
G-650-GS	650	2009	→		X
G-650-XMOTO	650	2007	2009		X
HUSQVARNA					
TR-STRADA	650	2013	→		X
TR-TERRA	650	2013	→		X

dischi freno brake rotor

APPLICAZIONI PER CODICE DISCO / applications for rotor code

DK
DK166

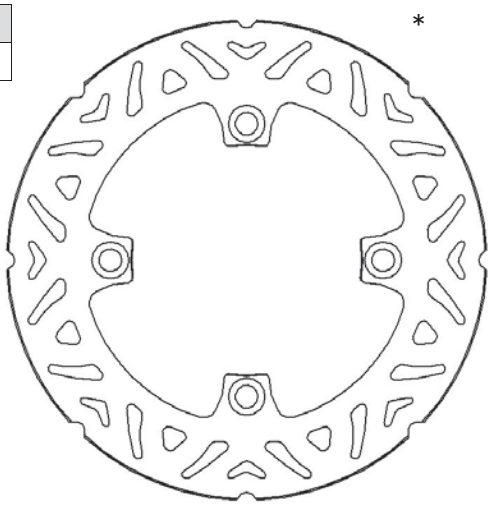

* l'immagine del prodotto è puramente indicativa
picture for illustrative purposes only

CODICE Reference	Ø ESTERNO Outer	Ø INTERNO Inner	SPESSORE Thickness	NR FORI No. holes	INTERASSE FORI Bolt patterns	Ø FORI Holes	CAMPANATURA Total height
DK166	240	116,5	5	4	135	10,5	0

CROSS REFERENCE		
ACCOSSATO	BREMBO	BRAKING
DK166	68B40783	RF7531

CODICE OEM	
HONDA	/

DK166					
MODELLO Model	CC	DA From	A To	ANT. Front	POST. Rear
HONDA					
CB-F	500	2004	2008		X
CBF	600	2004	2007		X
CBF-N	600	2003	2007		X
CBF-S-ABS	600	2003	2007		X
CBR-F	600	2011	→		X
CBR-F-ABS	600	2011	→		X
HORNET	600	2007	2013		X
HORNET-ABS	600	2007	2008		X
CBF	1000	2006	2013		X
CBF-ABS	1000	2006	2013		X
CBF-F-ABS	1000	2015	→		X
CBF-F-ST	1000	2006	2009		X
CBF-F-ST	1000	2010	2013		X
CBF-F-ST-ABS	1000	2006	2012		X

DK
DK167

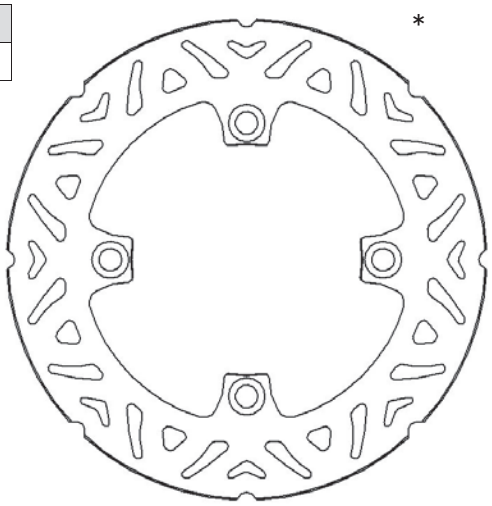

* l'immagine del prodotto è puramente indicativa
picture for illustrative purposes only

CODICE Reference	Ø ESTERNO Outer	Ø INTERNO Inner	SPESSORE Thickness	NR FORI No. holes	INTERASSE FORI Bolt patterns	Ø FORI Holes	CAMPANATURA Total height
DK167	240	112	4	4	130	9,5	0

CROSS REFERENCE		
ACCOSSATO	BREMBO	BRAKING
DK167	68B40789	ND

CODICE OEM	
BETA	/
HUSQVARNA	8B00H4977
HUSQVARNA	8000A0692

DK167					
MODELLO Model	CC	DA From	A To	ANT. Front	POST. Rear
BETA					
RR	250	2005	2009		X

DK167					
MODELLO Model	CC	DA From	A To	ANT. Front	POST. Rear
RR	350	2011	2012		X
RR	400	2005	2012		X
RR-ENDURO	400	2005	2012		X
RR	450	2005	2012		X
RR	498	2012	→		X
RR	520	2010	2011		X
RR	525	2005	2009		X
HUSQVARNA					
CR	125	2005	2012		X
WR	125	2006	2012		X
CR	250	2005	2011		X
TC	250	2001	2012		X
TXC	250	2011	→		X
WR	250	2007	→		X
TE	310	2010	2012		X
TE-4T	310	2010	2012		X
TXC	310	2011	→		X
SMR	449	2011	2012		X
TC-449	449	2011	2013		X
TE-449	449	2011	2013		X
SM-RR	450	2006	2008		X
TC	450	2004	2010		X
TE	450	2007	2010		X
TXC	450	2011	2013		X
TXC	480	2011	2013		X
SMR	510	2006	2010		X
TC	510	2005	2009		X
TE	510	2005	2010		X
TXC	510	2011	2012		X
SMR	511	2011	2012		X
TE	511	2011	2013		X
TXC	511	2011	2013		X

ACCOSSATO

dischi freno brake rotor

APPLICAZIONI PER CODICE DISCO / applications for rotor code

DK
DK168

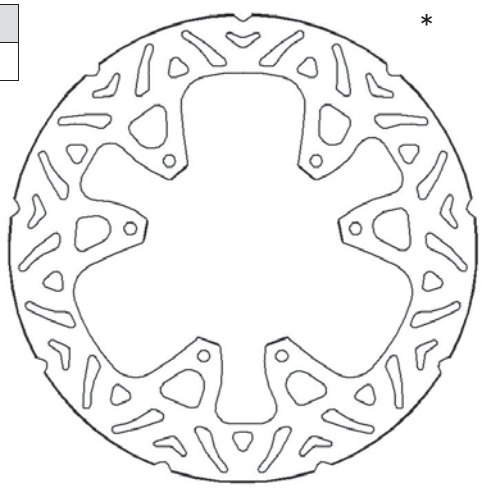

*

*** l'immagine del prodotto è puramente indicativa**
picture for illustrative purposes only

CODICE Reference	Ø ESTERNO Outer	Ø INTERNO Inner	SPESSORE Thickness	NR FORI No. holes	INTERASSE FORI Bolt patterns	Ø FORI Holes	CAMPANATURA Total height
DK168	244	115	4	6	133	6,5	0

CROSS REFERENCE		
ACCOSSATO	BREMBO	BRAKING
DK168	68B40790	ND

CODICE OEM	
YAMAHA	5NY2582W0000

DK168					
MODELLO Model	CC	DA From	A To	ANT. Front	POST. Rear
YAMAHA					
WR	125	2001	2007		X
YZ	125	2002	→		X
WR	250	2001	2007		X
WR-F	250	2001	2002		X
WR-F	250	2003	→		X
YZ	250	2002	→		X
YZ-F	250	2003	→		X
WR-F	426	2001	2002		X
YZ-F	426	2001	2002		X
WR-F	450	2003	→		X
YZ-F	450	2003	→		X

DK
DK169



*

*** l'immagine del prodotto è puramente indicativa**
picture for illustrative purposes only

CODICE Reference	Ø ESTERNO Outer	Ø INTERNO Inner	SPESSORE Thickness	NR FORI No. holes	INTERASSE FORI Bolt patterns	Ø FORI Holes	CAMPANATURA Total height
DK169	244	108	5	4	125	8,5	0

CROSS REFERENCE		
ACCOSSATO	BREMBO	BRAKING
DK169	68B40792	DC05RI

CODICE OEM	
DUCATI	49240761A

DK169					
MODELLO Model	CC	DA From	A To	ANT. Front	POST. Rear
DUCATI					
HYPERMOTARD	796	2010	2012		X
MONSTER	796	2010	→		X
MONSTER-ANNIVERSARY	796	2013	→		X
MONSTER-S2-R	803	2005	2006		X
MONSTER-S2-R-DARK	803	2005	2006		X
848	848	2008	2010		X
848-EVO	848	2011	→		X
848-EVO-CORSE-SPECIAL-EDITION	848	2012	→		X
848-SUPERBIKE	848	2013	→		X
STREETFIGHTER	848	2012	→		X
STREETFIGHTER-S	848	2012	→		X
MONSTER-S4-1000-R	1000	2003	2004		X
MONSTER-S4-1000-R-(MONOBRACCIO)	1000	2005	2006		X
MONSTER-S4-1000-RS	1000	2006	2006		X
MULTISTRADA/S	1000	2003	2006		X
HYPERMOTARD	1100	2007	2009		X
HYPERMOTARD-EVO	1100	2010	2012		X
HYPERMOTARD-EVO-SP	1100	2010	2012		X
HYPERMOTARD-S	1100	2007	2009		X
MONSTER	1100	2009	→		X
MONSTER-S	1100	2009	2010		X

dischi freno brake rotor

APPLICAZIONI PER CODICE DISCO / applications for rotor code

DK
DK170

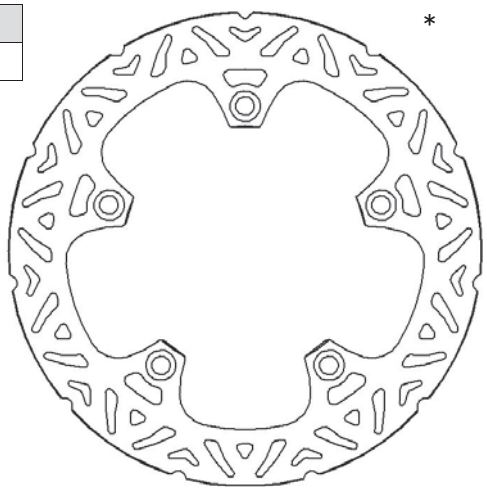

* l'immagine del prodotto è puramente indicativa
picture for illustrative purposes only

CODICE Reference	Ø ESTERNO Outer	Ø INTERNO Inner	SPESSORE Thickness	NR FORI No. holes	INTERASSE FORI Bolt patterns	Ø FORI Holes	CAMPANATURA Total height
DK170	240	125	5	5	150	10,5	0

CROSS REFERENCE		
ACCOSSATO	BREMBO	BRAKING
DK170	68B40799	ND

CODICE OEM	
KYMCO	157114

DK170					
MODELLO Model	CC	DA From	A To	ANT. Front	POST. Rear
KYMCO					
XCITING	250	2005	2008		X
XCITING	300	2008	2011		X
XCITING-R	300	2008	2011		X
XCITING-RI	300	2008	2009		X
XCITING	400	2012	2014		X
XCITING-ABS	400	2012	→		X
XCITING	500	2004	2009		X
XCITING-R	500	2007	2011		X

DK
DK171

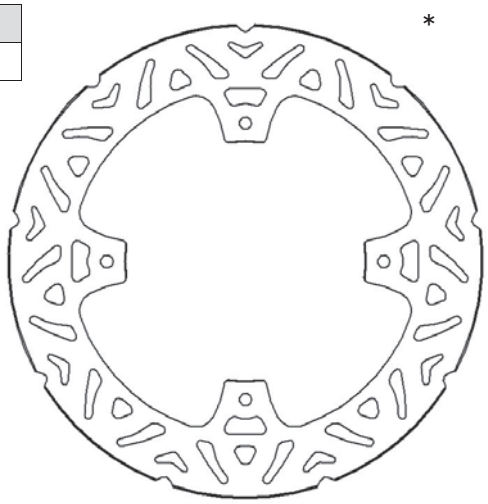

* l'immagine del prodotto è puramente indicativa
picture for illustrative purposes only

CODICE Reference	Ø ESTERNO Outer	Ø INTERNO Inner	SPESSORE Thickness	NR FORI No. holes	INTERASSE FORI Bolt patterns	Ø FORI Holes	CAMPANATURA Total height
DK171	250	110,5	5	4	130	10,5	0

CROSS REFERENCE		
ACCOSSATO	BREMBO	BRAKING
DK171	68B407A3	ND

CODICE OEM	
KAWASAKI	410800089

DK171					
MODELLO Model	CC	DA From	A To	ANT. Front	POST. Rear
KAWASAKI					
Z-750-ABS	750	2007	→		X
Z-750-R	750	2011	2012		X
Z-750-R-ABS	750	2011	2012		X
VERSYS	1000	2012	2014		X
Z	1000	2007	→		X
Z-SX	1000	2011	→		X
Z-SX-ABS	1000	2011	→		X
Z1000-ABS	1000	2007	→		X
ZZR	1400	2006	→		X
ZZR-ABS	1400	2006	→		X

ACCOSSATO

dischi freno brake rotor

APPLICAZIONI PER CODICE DISCO / applications for rotor code

DK
DK172

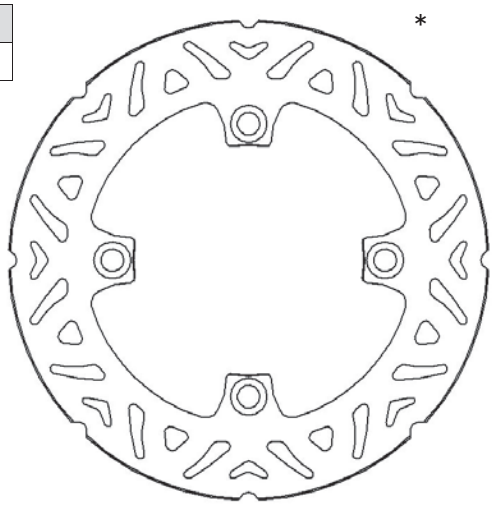

* l'immagine del prodotto è puramente indicativa
picture for illustrative purposes only

CODICE Reference	Ø ESTERNO Outer	Ø INTERNO Inner	SPESSORE Thickness	NR FORI No. holes	INTERASSE FORI Bolt patterns	Ø FORI Holes	CAMPANATURA Total height
DK172	255	105	5	4	125	10,5	0

CROSS REFERENCE		
ACCOSSATO	BREMBO	BRAKING
DK172	68B407A4	ND

CODICE OEM	
TRIUMPH	/

DK172					
MODELLO Model	CC	DA From	A To	ANT. Front	POST. Rear
TRIUMPH					
BONNEVILLE	800	2001	2006		X
TIGER-ABS	800	2011	2014		X
TIGER-XC-ABS	800	2011	2014		X
BONNEVILLE	865	2007	2008		X
BONNEVILLE-SE	865	2009	2011		X
BONNEVILLE-T100	865	2005	→		X
SCRAMBLER	865	2006	2008		X
SCRAMBLER-IE	865	2006	2014		X
THRUXTON	865	2004	2007		X
THRUXTON-IE	865	2008	2014		X
THRUXTON	900	2004	2011		X
SPRINT-RS	955	1999	2004		X
SPRINT-ST	955	1998	2004		X
SPEED-TRIPLE	1050	2009	→		X
SPEED-TRIPLE-R-ABS	1050	2012	2013		X
SPEED-TRIPLE-R-ABS	1050	2014	→		X
SPRINT-GT	1050	2010	→		X
SPRINT-ST-ABS	1050	2005	2010		X
SPRINT-ST-i-ABS	1050	2011	2012		X
TIGER-SPORT-ABS	1050	2013	→		X

DK
DK173

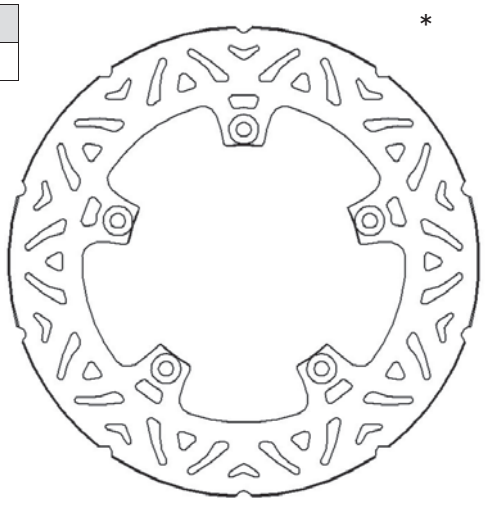

* l'immagine del prodotto è puramente indicativa
picture for illustrative purposes only

CODICE Reference	Ø ESTERNO Outer	Ø INTERNO Inner	SPESSORE Thickness	NR FORI No. holes	INTERASSE FORI Bolt patterns	Ø FORI Holes	CAMPANATURA Total height
DK173	240	126	6	5	140	6,25	0

CROSS REFERENCE		
ACCOSSATO	BREMBO	BRAKING
DK173	68B407A8	ND

CODICE OEM	
PEUGEOT	/

DK173					
MODELLO Model	CC	DA From	A To	ANT. Front	POST. Rear
PEUGEOT					
SATELIS-ABS	125	2006	2008		X
GEOPOLIS	250	2006	2009		X
GEOPOLIS	400	2007	2009		X
SATELIS	400	2007	→		X
SATELIS-RS	400	2007	→		X
SATELIS	500	2006	→		X
SATELIS-RS	500	2007	→		X

dischi freno brake rotor

APPLICAZIONI PER CODICE DISCO / applications for rotor code

DK
DK174

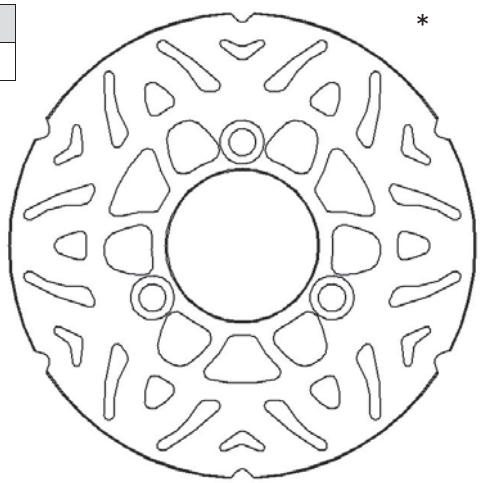

* **l'immagine del prodotto è puramente indicativa**
picture for illustrative purposes only

CODICE Reference	Ø ESTERNO Outer	Ø INTERNO Inner	SPESSORE Thickness	NR FORI No. holes	INTERASSE FORI Bolt patterns	Ø FORI Holes	CAMPANATURA Total height
DK174	267	132	5	3	150	8,5	0

CROSS REFERENCE		
ACCOSSATO	BREMBO	BRAKING
DK174	68B407C4	ND

CODICE OEM	
YAMAHA	1SDF582W0000

DK174					
MODELLO Model	CC	DA From	A To	ANT. Front	POST. Rear
YAMAHA					
MAJESTY	400	2004	2007		X
MAJESTY-ABS	400	2008	→		X
X-MAX	400	2014	→		X
X-MAX-ABS	400	2014	→		X

DK
DK175

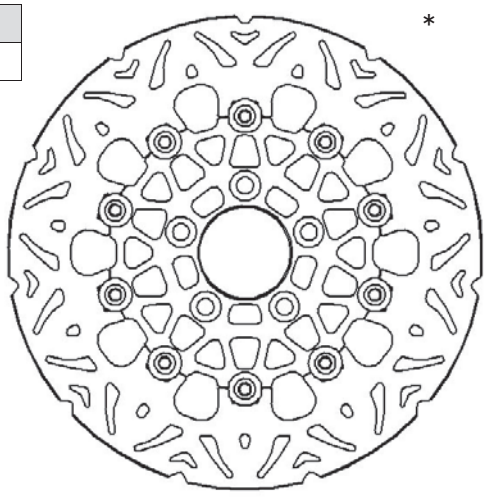

* **l'immagine del prodotto è puramente indicativa**
picture for illustrative purposes only

COLORI FASCIA FRENANTE / braking strip colours		
NERO	black	N

CODICE Reference	Ø ESTERNO Outer	Ø INTERNO Inner	SPESSORE Thickness	NR FORI No. holes	INTERASSE FORI Bolt patterns	Ø FORI Holes	CAMPANATURA Total height
DK175	285	51	5	4	68	13	0

CROSS REFERENCE		
ACCOSSATO	BREMBO	BRAKING
DK175	68B407D3	ND

CODICE OEM	
BMW	/

DK175					
MODELLO Model	CC	DA From	A To	ANT. Front	POST. Rear
BMW					
K-75	750	1984	1996		X
K-75-RT	750	1990	1996		X
K-75-S	750	1985	1988		X
K-75-S	750	1993	1996		X
K-1	1000	1989	1993		X
K-100	1000	1983	1989		X
K-100-LT-ABS	1000	1990	1991		X
K-100-RS	1000	1983	1991		X
K-100-RS-16V	1000	1989	1993		X
K-100-RT	1000	1984	1989		X
K-1100-LT-(noABS)	1100	1993	2000		X

ACCOSSATO

dischi freno brake rotor

APPLICAZIONI PER CODICE DISCO / applications for rotor code

DK
DK176

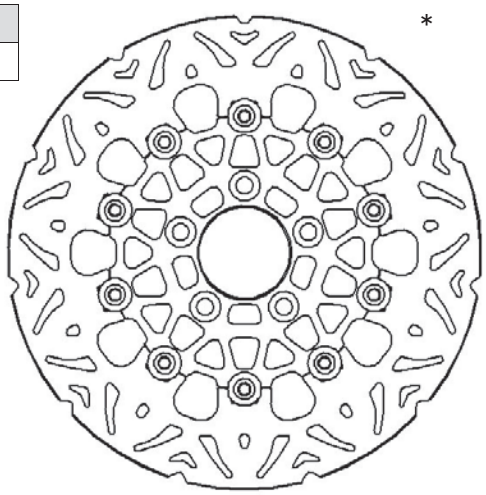

* **l'immagine del prodotto è puramente indicativa**
picture for illustrative purposes only

COLORI FASCIA FRENANTE / braking strip colours		
NERO	black	N

CODICE Reference	Ø ESTERNO Outer	Ø INTERNO Inner	SPESSORE Thickness	NR FORI No. holes	INTERASSE FORI Bolt patterns	Ø FORI Holes	CAMPANATURA Total height
DK176	292	50,5	5	5	82,5	10,3	0

CROSS REFERENCE		
ACCOSSATO	BREMBO	BRAKING
DK176	68B407E0	ND

CODICE OEM	
HARLEY DAVIDSON	/

DK176					
MODELLO Model	CC	DA From	A To	ANT. Front	POST. Rear
HARLEY DAVIDSON					
XLH-883	883	1970	1984		X
XLH-883-SPORTSTER	883	1985	1999		X
XL	1000	1978	1981		X
XLS-ROADSTER	1000	1979	1984		X
XLH-1200-SPORTSTER	1200	1987	1999		X
FLH-1340-ELECTRA-GLIDE	1340	1982	1983		X
FLH-80	1340	1981	1999		X
FLSTC-FAT-BOY	1340	1989	1999		X
FLSTC-HERITAGE-SOFTAIL-CLASSIC	1340	1989	1999		X
FLSTF-FAT-BOY	1340	1989	1999		X
FXDWG-DYNA-WIDE-GLIDE	1340	1993	1998		X
FXLR-1340-LOW-RIDER-CUSTOM	1340	1987	1999		X
FXR-1340-SUPER-GLIDE	1340	1982	1999		X
FXRS-1340-LOW-RIDER-SPORT	1340	1987	1999		X
FXRS-LOW-RIDER-SPORT	1340	1987	1999		X
FXRT-1340-SPORT-GLIDE	1340	1987	1999		X
FXSTC-1340-SOFTAIL-CUSTOM	1340	1989	1999		X
FXSTS-1340-SPRINGER-SOFTAIL	1340	1989	1999		X
FLHR/I-ROAD-KING	1450	1998	1999		X
FLHT/I ELECTRA-GLIDE-STANDARD	1450	1998	1999		X
FLTR/I-ROAD-GLIDE	1450	1998	1999		X
FXDS-DYNA-SUPER-GLIDE-SPORT	1450	1998	1999		X
FXDWG-DYNA-WIDE-GLIDE	1450	1993	1999		X
FXRS-SPORT-GLIDE	1450	1984	1986		X
FXRT-TOUR-GLIDE	1450	1984	1986		X
FXSTB-ICE-BOB	1450	2000	2003		X

DK
DK177

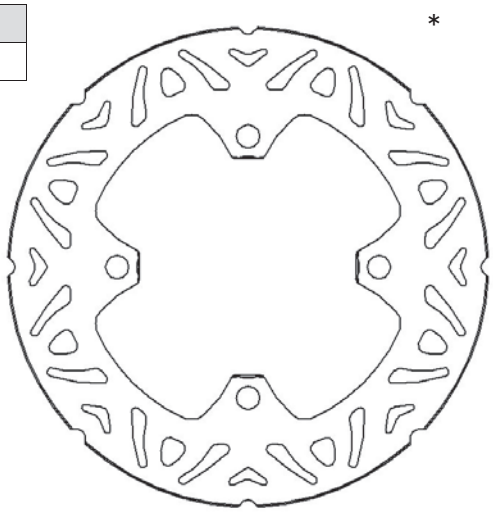

* **l'immagine del prodotto è puramente indicativa**
picture for illustrative purposes only

CODICE Reference	Ø ESTERNO Outer	Ø INTERNO Inner	SPESSORE Thickness	NR FORI No. holes	INTERASSE FORI Bolt patterns	Ø FORI Holes	CAMPANATURA Total height
DK177	260	141	5	4	162	10,5	0

CROSS REFERENCE		
ACCOSSATO	BREMBO	BRAKING
DK177	68B407E3	RF7536

CODICE OEM	
KAWASAKI	41080S013
SUZUKI	69211-06G00-000

DK177					
MODELLO Model	CC	DA From	A To	ANT. Front	POST. Rear
KAWASAKI					
KLV	1000	2004	2007		X
SUZUKI					
DL-V-STROM	650	2004	2006		X
DL-V-STROM	650	2007	2012		X
DL-V-STROM-ABS	650	2007	→		X
DL-V-STROM XT (left/rear)	650	2015	→		X
DL-V-STROM	1000	2002	2010		X
DL-V-STROM-ABS	1000	2014	→		X
V-STROM-ABS	1000	2014	→		X

dischi freno brake rotor

APPLICAZIONI PER CODICE DISCO / applications for rotor code

DK
DK178

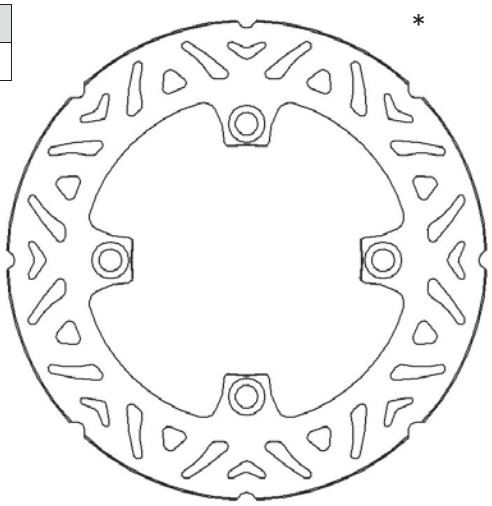

* l'immagine del prodotto è puramente indicativa
picture for illustrative purposes only

CODICE Reference	Ø ESTERNO Outer	Ø INTERNO Inner	SPESSORE Thickness	NR FORI No. holes	INTERASSE FORI Bolt patterns	Ø FORI Holes	CAMPANATURA Total height
DK178	245	83	5	4	102	9,85	0

CROSS REFERENCE		
ACCOSSATO	BREMBO	BRAKING
DK178	68B407E8	ND

CODICE OEM	
DUCATI	49210041A

DK178					
MODELLO Model	CC	DA From	A To	ANT. Front	POST. Rear
DUCATI					
1098/R/S/TRICOLORE	1098	2007	→		X
STREETFIGHTER	1098	2009	→		X
STREETFIGHTER-S	1098	2009	→		X
1098-BAYLISS	1198	2009	→		X
1098-R	1198	2009	→		X
1198	1198	2009	→		X
1198-S	1198	2009	→		X
1198-SP	1198	2011	→		X

DK
DK179

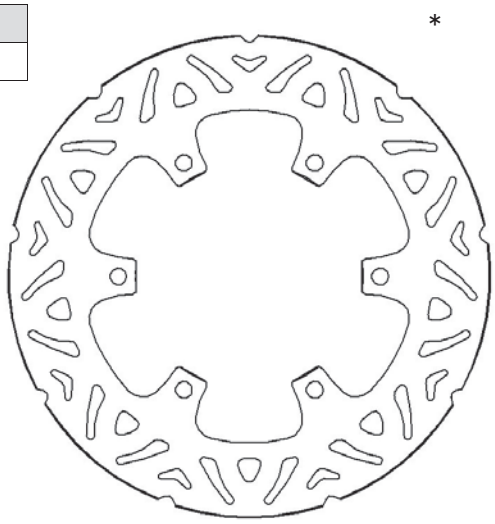

* l'immagine del prodotto è puramente indicativa
picture for illustrative purposes only

CODICE Reference	Ø ESTERNO Outer	Ø INTERNO Inner	SPESSORE Thickness	NR FORI No. holes	INTERASSE FORI Bolt patterns	Ø FORI Holes	CAMPANATURA Total height
DK179	240	110	5	6	125	6,5	0

CROSS REFERENCE		
ACCOSSATO	BREMBO	BRAKING
DK179	68B407F0	ND

CODICE OEM	
BETA	/
KTM	/

DK179					
MODELLO Model	CC	DA From	A To	ANT. Front	POST. Rear
BETA					
RR	250	2013	→		X
RR	300	2013	→		X
RR	350	2013	→		X
RR	400	2013	→		X
RR	450	2013	→		X
RR	498	2013	→		X
KTM					
SUPERMOTO	690	2007	2008		X
LC8-ADVENTURE	950	2002	2006		X
LC8-ADVENTURE-S	950	2002	2006		X
SUPERENDURO-R	950	2006	2008		X
LC8-ADVENTURE-S	990	2006	2008		X
LC8-ADVENTURE-S/ABS	990	2006	2008		X

ACCOSSATO

dischi freno brake rotor

APPLICAZIONI PER CODICE DISCO / applications for rotor code

DK
DK180

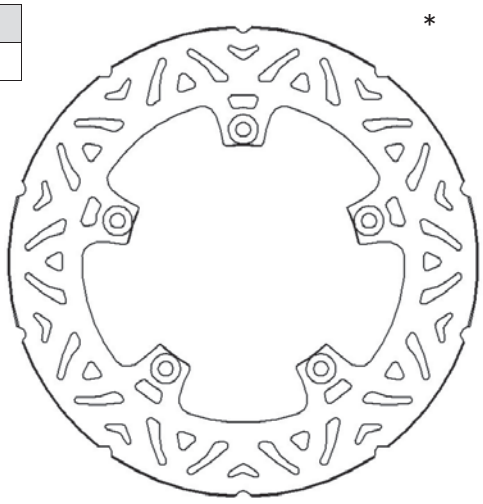

*

*** l'immagine del prodotto è puramente indicativa**
picture for illustrative purposes only

CODICE Reference	Ø ESTERNO Outer	Ø INTERNO Inner	SPESSORE Thickness	NR FORI No. holes	INTERASSE FORI Bolt patterns	Ø FORI Holes	CAMPANATURA Total height
DK180	240	107	5	5	130	8,5	0

CROSS REFERENCE		
ACCOSSATO	BREMBO	BRAKING
DK180	68B407F1	ND

CODICE OEM	
KTM	/

DK180					
MODELLO Model	CC	DA From	A To	ANT. Front	POST. Rear
KTM					
DUKE	690	2008	2013		X
DUKE	690	2014	→		X
DUKE-ABS	690	2012	2012		X
DUKE-R	690	2014	→		X
SM	690	2007	→		X
SM-PRESTIGE	690	2008	2009		X
SM-R	690	2008	→		X
SUPERMOTO	950	2005	2007		X
SUPERMOTO-R	950	2006	2008		X
SUPER-DUKE	990	2005	2011		X
SUPERDUKE-R	990	2007	2011		X
SUPERMOTO	990	2007	2012		X
SUPERMOTO-R	990	2010	2012		X

DK
DK181

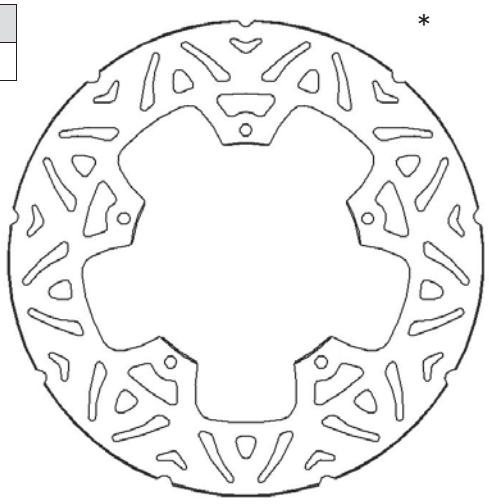

*

*** l'immagine del prodotto è puramente indicativa**
picture for illustrative purposes only

CODICE Reference	Ø ESTERNO Outer	Ø INTERNO Inner	SPESSORE Thickness	NR FORI No. holes	INTERASSE FORI Bolt patterns	Ø FORI Holes	CAMPANATURA Total height
DK181	220	119,5	5	5	136	6,5	0

CROSS REFERENCE		
ACCOSSATO	BREMBO	BRAKING
DK181	68B407F2	RF7519

CODICE OEM	
BMW	/

DK181					
MODELLO Model	CC	DA From	A To	ANT. Front	POST. Rear
BMW					
S-1000-R	1000	2014	→		X
S-1000-RR	1000	2009	→		X
S-1000-RR-HP4	1000	2013	→		X

dischi freno brake rotor

APPLICAZIONI PER CODICE DISCO / applications for rotor code

DK
DK182

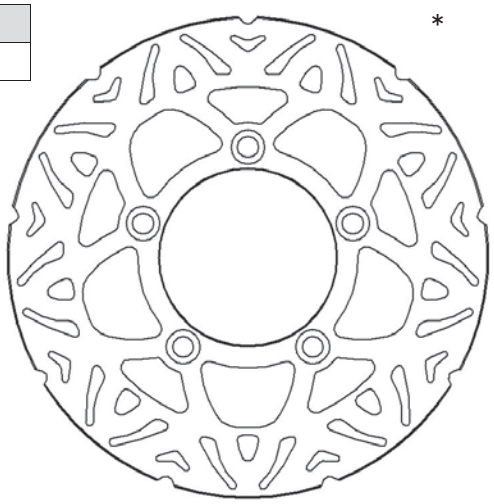

* l'immagine del prodotto è puramente indicativa
picture for illustrative purposes only

CODICE Reference	Ø ESTERNO Outer	Ø INTERNO Inner	SPESSORE Thickness	NR FORI No. holes	INTERASSE FORI Bolt patterns	Ø FORI Holes	CAMPANATURA Total height
DK182	282	134	5	5	166	10,5	0

CROSS REFERENCE		
ACCOSSATO	BREMBO	BRAKING
DK182	68B407F8	RF8512

CODICE OEM	
YAMAHA	59C2582W0000

DK182					
MODELLO Model	CC	DA From	A To	ANT. Front	POST. Rear
YAMAHA					
T-MAX	530	2012	→		X
T-MAX-ABS	530	2012	→		X
T-MAX-BRONZE-MAX/ABS	530	2013	→		X
T-MAX-IRON-MAX	530	2015	→		X

DK
DK183

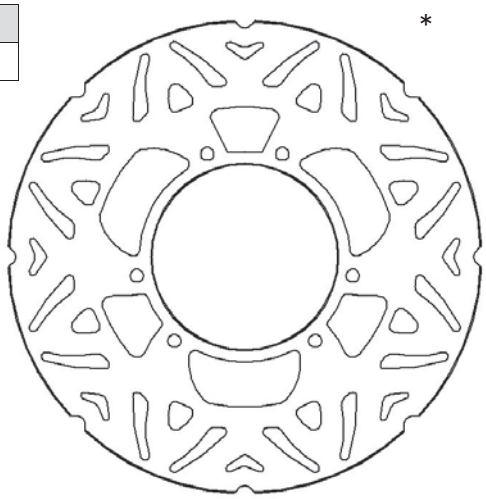

* l'immagine del prodotto è puramente indicativa
picture for illustrative purposes only

CODICE Reference	Ø ESTERNO Outer	Ø INTERNO Inner	SPESSORE Thickness	NR FORI No. holes	INTERASSE FORI Bolt patterns	Ø FORI Holes	CAMPANATURA Total height
DK183	282	144	5	6	166	10,5	0

CROSS REFERENCE		
ACCOSSATO	BREMBO	BRAKING
DK183	68B407G4	ND

CODICE OEM	
MOTO GUZZI	/

DK183					
MODELLO Model	CC	DA From	A To	ANT. Front	POST. Rear
MOTO GUZZI					
DAYTONA-RS	1000	1996	→		X
CALIFORNIA-ALUMINIUM	1100	2003	→		X
CALIFORNIA-EV	1100	1996	2000		X
CALIFORNIA-EV-SPECIAL	1100	1997	2003		X
CALIFORNIA-EV-TOURING	1100	2003	→		X
CALIFORNIA-JACKAL	1100	2001	2006		X
CALIFORNIA-TITANIUM	1100	2003	→		X
METAL	1100	2002	→		X
SPORT	1100	2000	→		X
V11	1100	2000	→		X
V11-CAFE'-SPORT	1100	2003	→		X
V11-LE-MANS-NERO-CORSA	1100	2003	→		X
V11-LE-MANS-ROSSO-CORSA	1100	2003	→		X
V11-BALLABIO	1100	2003	→		X
V11-COPPA-ITALIA	1100	2003	→		X
V11-LE-MANS	1100	2001	2005		X
V11-NAKED	1100	2001	2002		X
V11-NAKED	1100	2003	→		X
V11-SPORT	1100	2001	2002		X

ACCOSSATO

dischi freno brake rotor

APPLICAZIONI PER CODICE DISCO / applications for rotor code

DK
DK184

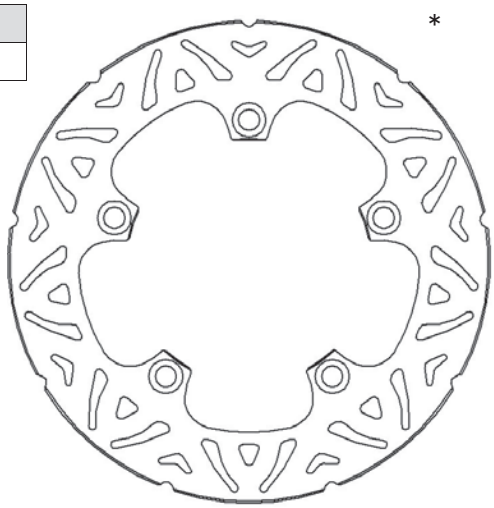

*

*** l'immagine del prodotto è puramente indicativa**
picture for illustrative purposes only

CODICE Reference	Ø ESTERNO Outer	Ø INTERNO Inner	SPESSORE Thickness	NR FORI No. holes	INTERASSE FORI Bolt patterns	Ø FORI Holes	CAMPANATURA Total height
DK184	220	102	5	5	120	8,5	0

CROSS REFERENCE		
ACCOSSATO	BREMBO	BRAKING
DK184	68B407G6	ND

CODICE OEM	
APRILIA	AP8113612
BENELLI	R180272105000
LAVERDA	/

DK184					
MODELLO Model	CC	DA From	A To	ANT. Front	POST. Rear
APRILIA					
RSV	1000	1998	2000		X
RSV	1000	2001	2003		X
RSV-FACTORY	1000	2003	2007		X
RSV-R	1000	2000	2008		X
RSV-SP	1000	1999	2000		X
RSV4-FACTORY	1000	2009	2011		X
RSV4-FACTORY-APRC	1000	2011	2012		X
RSV4-FACTORY-APRC-ABS	1000	2013	→		X
RSV4-R	1000	2010	2010		X
RSV4-RF	1000	2015	→		X
RSV4-RR	1000	2015	→		X
SL-FALCO	1000	2000	2004		X
TUONO	1000	2003	→		X
TUONO-FIGHTER	1000	2002	2005		X
TUONO-R	1000	2003	2009		X
TUONO-RACING	1000	2004	2005		X
TUONO-V4-FACTORY	1000	2015	→		X
TUONO-V4-FACTORY-RR	1000	2015	→		X
TUONO-V4R	1000	2011	→		X
TUONO-V4R-APRC	1000	2011	→		X
TUONO-V4R-APRC-ABS	1000	2014	→		X
BENELLI					
TORNADO-3-L.E.	900	2003	2006		X
TORNADO-3-RS	900	2004	2006		X
LAVERDA					
SFC-LIMITED-EDITION	1000	2003	→		X

DK
DK185

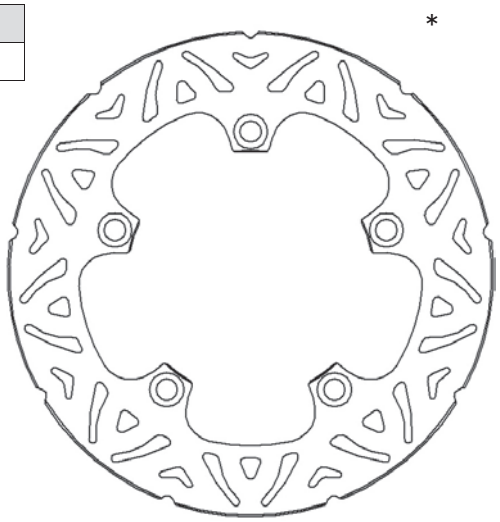

*

*** l'immagine del prodotto è puramente indicativa**
picture for illustrative purposes only

CODICE Reference	Ø ESTERNO Outer	Ø INTERNO Inner	SPESSORE Thickness	NR FORI No. holes	INTERASSE FORI Bolt patterns	Ø FORI Holes	CAMPANATURA Total height
DK185	240	0	5	5	136	10,5	0

CROSS REFERENCE		
ACCOSSATO	BREMBO	BRAKING
DK185	68B407G8	ND

CODICE OEM	
HONDA	/

DK185					
MODELLO Model	CC	DA From	A To	ANT. Front	POST. Rear
HONDA					
CTX	700	2014	→		X
CTX-DCTI-ABS	700	2014	→		X
CTX-N	700	2014	→		X
CTX-N-DCTI-ABS	700	2000	→		X
INTEGRA	700	2012	→		X
NC-ABS	700	2012	→		X
NC-ABS-DCT	700	2012	→		X
NC-S	700	2012	→		X
NC-X-ABS	700	2012	→		X
NC-X-ABS-DCT	700	2012	→		X
INTEGRA-DCT-ABS	750	2014	→		X
NC-S	750	2014	→		X
NC-X	750	2014	→		X

dischi freno brake rotor

APPLICAZIONI PER CODICE DISCO / applications for rotor code

DK
DK186

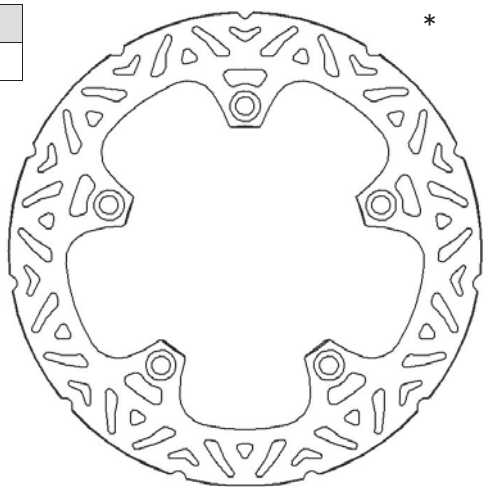

* l'immagine del prodotto è puramente indicativa
picture for illustrative purposes only

CODICE Reference	Ø ESTERNO Outer	Ø INTERNO Inner	SPESSORE Thickness	NR FORI No. holes	INTERASSE FORI Bolt patterns	Ø FORI Holes	CAMPANATURA Total height
DK186	276	0	5	5	160	10,5	0

CROSS REFERENCE		
ACCOSSATO	BREMBO	BRAKING
DK186	68B407G9	RF7547

CODICE OEM	
BMW	/

DK186					
MODELLO Model	CC	DA From	A To	ANT. Front	POST. Rear
BMW					
R-1200-GS	1200	2013	→		X
R-1200-GS-ABS	1200	2013	→		X
R-1200-GS-ADVENTURE	1200	2014	→		X
R-1200-R	1200	2015	→		X
R-1200-RS	1200	2015	→		X
R-1200-RT	1200	2014	→		X

DK
DK187

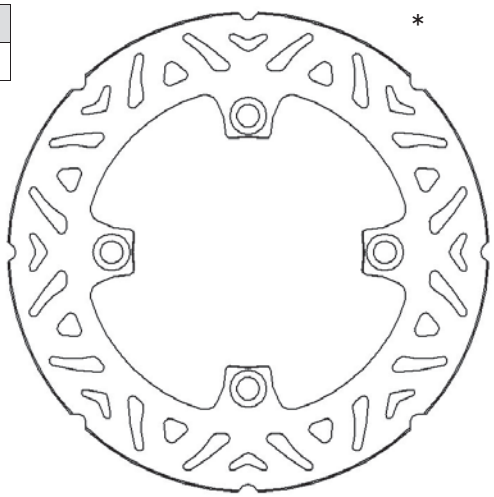

* l'immagine del prodotto è puramente indicativa
picture for illustrative purposes only

CODICE Reference	Ø ESTERNO Outer	Ø INTERNO Inner	SPESSORE Thickness	NR FORI No. holes	INTERASSE FORI Bolt patterns	Ø FORI Holes	CAMPANATURA Total height
DK187	245	108	5	4	125	8,5	0

CROSS REFERENCE		
ACCOSSATO	BREMBO	BRAKING
DK187	68B407H0	ND

CODICE OEM	
DUCATI	49210051A

DK187					
MODELLO Model	CC	DA From	A To	ANT. Front	POST. Rear
DUCATI					
MONSTER-ABS	796	2010	2012		X
MONSTER-ABS-ANNIVERSARY	796	2013	→		X
HYPERMOTARD	820	2013	→		X
HYPERMOTARD-SP	820	2013	→		X
HYPERMOTARD-TOURING	820	2013	→		X
HYPERSTRADA	820	2013	→		X
HYPERMOTARD-SP	821	2015	→		X
MONSTER-EVO-ABS	1100	2011	→		X
MONSTER-EVO-ABS-ANNIVERSARY	1100	2011	2011		X

ACCOSSATO

dischi freno brake rotor

APPLICAZIONI PER CODICE DISCO / applications for rotor code

DK
DK188

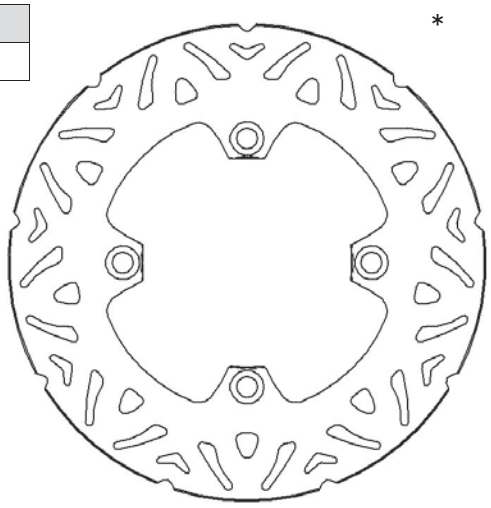

* l'immagine del prodotto è puramente indicativa
picture for illustrative purposes only

CODICE Reference	Ø ESTERNO Outer	Ø INTERNO Inner	SPESSORE Thickness	NR FORI No. holes	INTERASSE FORI Bolt patterns	Ø FORI Holes	CAMPANATURA Total height
DK188	265	83	6	4	102	9,85	0

CROSS REFERENCE		
ACCOSSATO	BREMBO	BRAKING
DK188	68B407H2	ND

CODICE OEM	
DUCATI	49241111A

DK188					
MODELLO Model	CC	DA From	A To	ANT. Front	POST. Rear
DUCATI					
DIAVEL	1200	2011	→		X
DIAVEL-CARBON	1200	2013	→		X
DIAVEL-DARK	1200	2013	→		X
DIAVEL-STRADA	1200	2013	→		X
DIAVEL-TITANIUM	1200	2015	→		X
MULTISTRADA	1200	2015	→		X
MULTISTRADA-S	1200	2015	→		X
MULTISTRADA-S-D-AIR	1200	2015	→		X

DK
DK189



* l'immagine del prodotto è puramente indicativa
picture for illustrative purposes only

CODICE Reference	Ø ESTERNO Outer	Ø INTERNO Inner	SPESSORE Thickness	NR FORI No. holes	INTERASSE FORI Bolt patterns	Ø FORI Holes	CAMPANATURA Total height
DK189	245	105	5	5	125	10,5	0

CROSS REFERENCE		
ACCOSSATO	BREMBO	BRAKING
DK189	68B407H3	YA44RI

CODICE OEM	
YAMAHA	2D12582W0000

DK189					
MODELLO Model	CC	DA From	A To	ANT. Front	POST. Rear
YAMAHA					
FZ6-FAZER	600	2004	2008		X
FZ6-FAZER-S2	600	2007	2008		X
FZS-FAZER	600	2004	2008		X
MT-03	660	2006	2011		X
FZ1	1000	2006	2011		X
FZ1-FAZER	1000	2006	2012		X

dischi freno brake rotor

APPLICAZIONI PER CODICE DISCO / applications for rotor code

DK
DK190

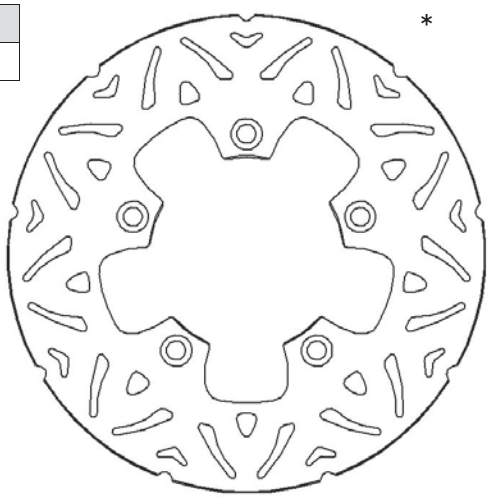

* l'immagine del prodotto è puramente indicativa
picture for illustrative purposes only

CODICE Reference	Ø ESTERNO Outer	Ø INTERNO Inner	SPESSORE Thickness	NR FORI No. holes	INTERASSE FORI Bolt patterns	Ø FORI Holes	CAMPANATURA Total height
DK190	282	106	5	5	128	10,5	0

CROSS REFERENCE		
ACCOSSATO	BREMBO	BRAKING
DK190	68B407H5	ND

CODICE OEM	
TRIUMPH	/

DK190					
MODELLO Model	CC	DA From	A To	ANT. Front	POST. Rear
TRIUMPH					
TIGER-EXPLORER	1200	2012	→		X
TIGER-EXPLORER-XC	1200	2013	→		X
TIGER-XC	1200	2013	→		X
TROPHY	1215	2012	→		X
TROPHY-SE	1215	2012	→		X

DK
DK191

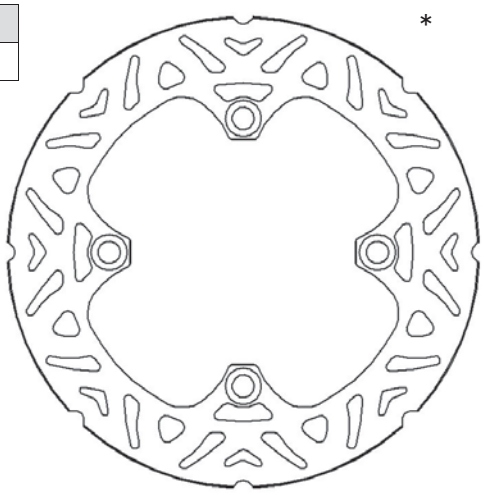

* l'immagine del prodotto è puramente indicativa
picture for illustrative purposes only

CODICE Reference	Ø ESTERNO Outer	Ø INTERNO Inner	SPESSORE Thickness	NR FORI No. holes	INTERASSE FORI Bolt patterns	Ø FORI Holes	CAMPANATURA Total height
DK191	220	82	5	4	100	10,5	0

CROSS REFERENCE		
ACCOSSATO	BREMBO	BRAKING
DK191	68B407H6	ND

CODICE OEM	
TRIUMPH	/

DK191					
MODELLO Model	CC	DA From	A To	ANT. Front	POST. Rear
TRIUMPH					
DAYTONA	675	2013	→		X
DAYTONA-R	675	2013	→		X
STREET-TRIPLE	675	2013	→		X
STREET-TRIPLE-R	675	2013	→		X
STREET-TRIPLE-RX	675	2015	→		X

ACCOSSATO

dischi freno brake rotor

APPLICAZIONI PER CODICE DISCO / applications for rotor code

DK
DK192

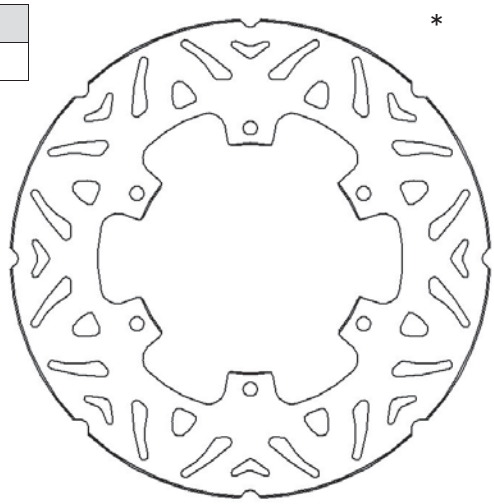

* l'immagine del prodotto è puramente indicativa
picture for illustrative purposes only

CODICE Reference	Ø ESTERNO Outer	Ø INTERNO Inner	SPESSORE Thickness	NR FORI No. holes	INTERASSE FORI Bolt patterns	Ø FORI Holes	CAMPANATURA Total height
DK192	245	115	5	6	133	8,5	0

CROSS REFERENCE		
ACCOSSATO	BREMBO	BRAKING
DK192	68B407H8	ND

CODICE OEM	
YAMAHA	5VKF582W0000
YAMAHA	4HM2582W0000

DK192					
MODELLO Model	CC	DA From	A To	ANT. Front	POST. Rear
YAMAHA					
FZR	600	1989	1995		X
FZS-FAZER	600	1998	2000		X
FZS-FAZER	600	2001	2003		X
SRX	600	1986	→		X
XJ-DIVERSION	600	1991	1997		X
XJ-DIVERSION	600	1998	2003		X
YZF-R-THUNDER-CAT	600	1996	2004		X
XT-R	660	2004	2013		X
XT-X	660	2004	2009		X
XTZ-TENERE'	660	2008	2013		X
YZF-R7	750	1999	2001		X
FZS-FAZER	800	1998	1999		X
TDM	850	1991	2001		X
TRX	850	1995	2000		X
YZF-THUNDER-ACE	1000	1996	1998		X

DK
DK193

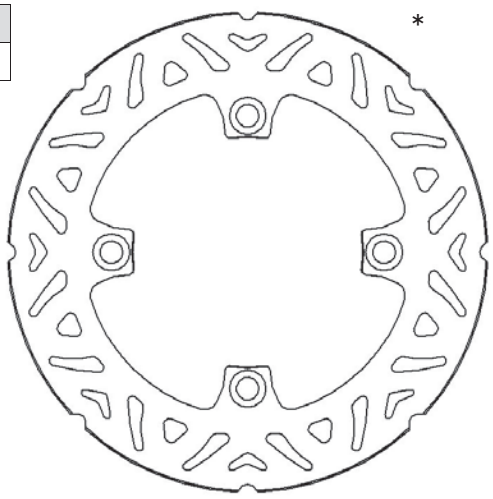

* l'immagine del prodotto è puramente indicativa
picture for illustrative purposes only

CODICE Reference	Ø ESTERNO Outer	Ø INTERNO Inner	SPESSORE Thickness	NR FORI No. holes	INTERASSE FORI Bolt patterns	Ø FORI Holes	CAMPANATURA Total height
DK193	210	108	5	4	125	7,5	0

CROSS REFERENCE		
ACCOSSATO	BREMBO	BRAKING
DK193	68B407J1	ND

CODICE OEM	
MV AGUSTA	8A00B1654
MV AGUSTA	8000B1654

DK193					
MODELLO Model	CC	DA From	A To	ANT. Front	POST. Rear
MV AGUSTA					
BRUTALE-S	750	2001	2006		X
F4-BIPOSTO-S	750	1998	2006		X
F4-BIPOSTO-S	750	2000	2006		X
BRUTALE-S	910	2005	2008		X
BRUTALE	920	2012	→		X
F4	1000	2013	→		X
F4-R	1000	2010	2013		X
F4-RC	1000	2016	→		X
F4-RR	1000	2010	2013		X
BRUTALE	1090	2013	→		X
BRUTALE-CORSA	1090	2014	→		X
BRUTALE-R	1090	2012	→		X
BRUTALE-RR	1090	2012	→		X

dischi freno brake rotor

APPLICAZIONI PER CODICE DISCO / applications for rotor code

DK
DK194

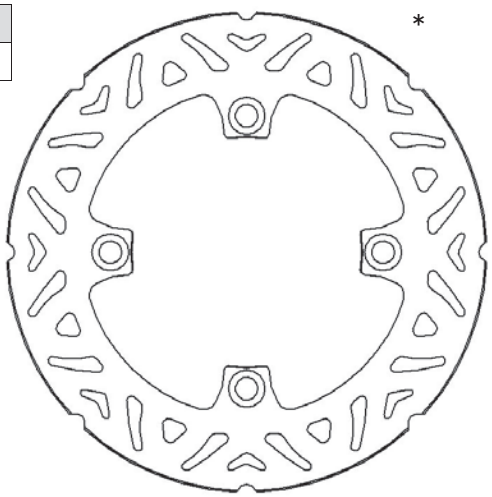

* l'immagine del prodotto è puramente indicativa
picture for illustrative purposes only

CODICE Reference	Ø ESTERNO Outer	Ø INTERNO Inner	SPESSORE Thickness	NR FORI No. holes	INTERASSE FORI Bolt patterns	Ø FORI Holes	CAMPANATURA Total height
DK194	220	108	5	4	125	7,5	0

CROSS REFERENCE		
ACCOSSATO	BREMBO	BRAKING
DK194	68B407J2	ND

CODICE OEM	
MV AGUSTA	8000B5926

DK194					
MODELLO Model	CC	DA From	A To	ANT. Front	POST. Rear
MV AGUSTA					
BRUTALE	675	2013	→		
F3	675	2011	→		
F3-RC	675	2016	→		
F3-SERIE-ORO	675	2012	2013		
BRUTALE	800	2013	→		
BRUTALE-RR	800	2015	→		
DRAGSTER	800	2014	→		
DRAGSTER-RR	800	2014	→		
DRAGSTER-RR-LH44	800	2015	→		
F3	800	2012	2013		
F3-AGO	800	2014	→		
F3-RC	800	2016	→		
F3-SERIE-ORO	800	2012	2013		
RIVALE	800	2013	→		
STRADALE	800	2015	→		
TURISMO-VELOCE	800	2014	→		
TURISMO-VELOCE-LUSSO	800	2014	→		

DK
DK195

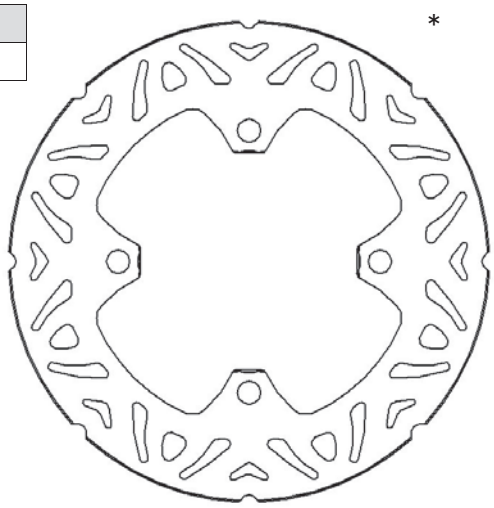

* l'immagine del prodotto è puramente indicativa
picture for illustrative purposes only

CODICE Reference	Ø ESTERNO Outer	Ø INTERNO Inner	SPESSORE Thickness	NR FORI No. holes	INTERASSE FORI Bolt patterns	Ø FORI Holes	CAMPANATURA Total height
DK195	250	110,5	6	4	130	10,5	0

CROSS REFERENCE		
ACCOSSATO	BREMBO	BRAKING
DK195	68B407J3	RF7521

CODICE OEM	
KAWASAKI	410800576

DK195					
MODELLO Model	CC	DA From	A To	ANT. Front	POST. Rear
KAWASAKI					
Z-800	800	2013	→		X
Z-800-ABS	800	2013	→		X
Z-800-E	800	2013	→		X

ACCOSSATO

dischi freno brake rotor

APPLICAZIONI PER CODICE DISCO / applications for rotor code

DK
DK196

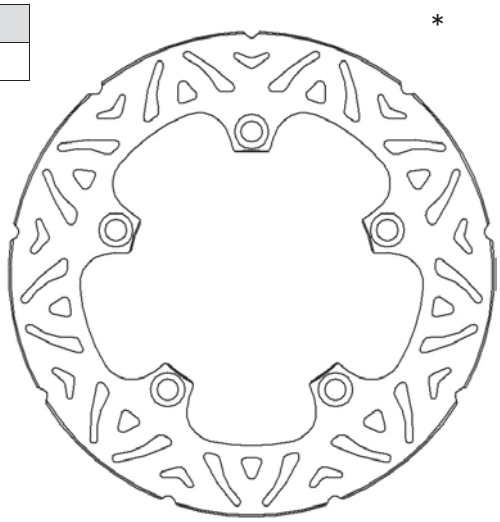

*

*** l'immagine del prodotto è puramente indicativa**
picture for illustrative purposes only

CODICE Reference	Ø ESTERNO Outer	Ø INTERNO Inner	SPESSORE Thickness	NR FORI No. holes	INTERASSE FORI Bolt patterns	Ø FORI Holes	CAMPANATURA Total height
DK196	245	132	5	5	150	10,5	0

CROSS REFERENCE		
ACCOSSATO	BREMBO	BRAKING
DK196	68B407L0	RF7549

CODICE OEM	
YAMAHA	1WS2582W0000
YAMAHA	1RC2582W0000

DK196					
MODELLO Model	CC	DA From	A To	ANT. Front	POST. Rear
YAMAHA					
MT-07	700	2014	→		X
MT-07-ABS	700	2015	→		X
MT-09	850	2014	→		X
MT-09-ABS	850	2014	→		X
MT-09-STREET-RALLY	850	2014	→		X
MT-09-STREET-RALLY-ABS	850	2014	→		X

DK
DK197

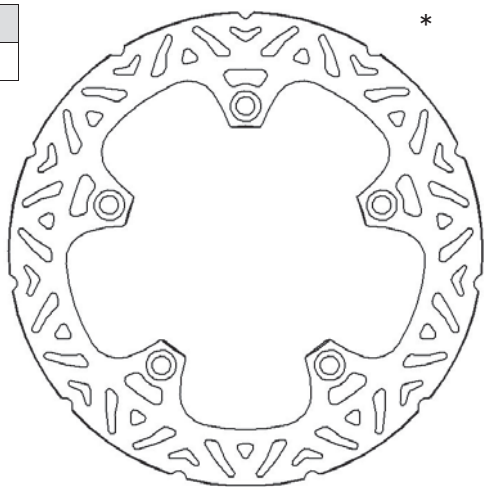

*

*** l'immagine del prodotto è puramente indicativa**
picture for illustrative purposes only

CODICE Reference	Ø ESTERNO Outer	Ø INTERNO Inner	SPESSORE Thickness	NR FORI No. holes	INTERASSE FORI Bolt patterns	Ø FORI Holes	CAMPANATURA Total height
DK197	276	170	6	5	190	10,5	0

CROSS REFERENCE		
ACCOSSATO	BREMBO	BRAKING
DK197	68B407N1	ND

CODICE OEM	
HONDA	/
KAWASAKI	41080059111H
KAWASAKI	41080059811H

DK197					
MODELLO Model	CC	DA From	A To	ANT. Front	POST. Rear
HONDA					
CROSSTOURER	1200	2012	2014		X
CROSSTOURER-DCT-TRAVEL-EDITION	1200	2012	2014		X
CROSSTOURER-L	1200	2014	→		X
CROSSTOURER-S	1200	2014	→		X
VFR	1200	2010	2013		X
VFR-DCT	1200	2010	2013		X
KAWASAKI					
Z-SL	250	2015	→		X
Z-ABS	300	2015	→		X

dischi freno brake rotor

APPLICAZIONI PER CODICE DISCO / applications for rotor code

DK
DK198

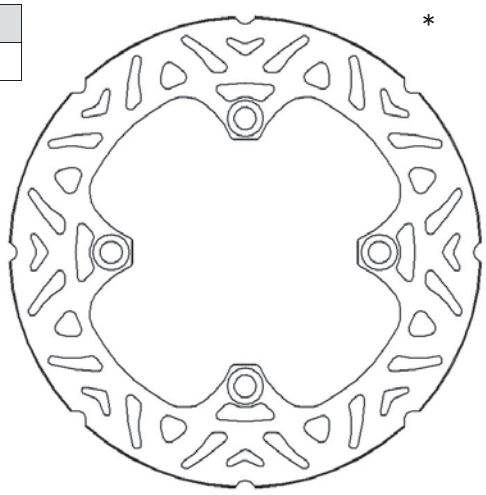

* l'immagine del prodotto è puramente indicativa
picture for illustrative purposes only

CODICE Reference	Ø ESTERNO Outer	Ø INTERNO Inner	SPESSORE Thickness	NR FORI No. holes	INTERASSE FORI Bolt patterns	Ø FORI Holes	CAMPANATURA Total height
DK198	255	105	6	4	125	10,5	0

CROSS REFERENCE		
ACCOSSATO	BREMBO	BRAKING
DK198	68B407N6	ND

CODICE OEM	
TRIUMPH	/

DK198					
MODELLO Model	CC	DA From	A To	ANT. Front	POST. Rear
TRIUMPH					
TIGER-XC	800	2015	→		X
TIGER-XCx	800	2015	→		X
TIGER-XR	800	2015	→		X
TIGER-XRx	800	2015	→		X

DK
DK199

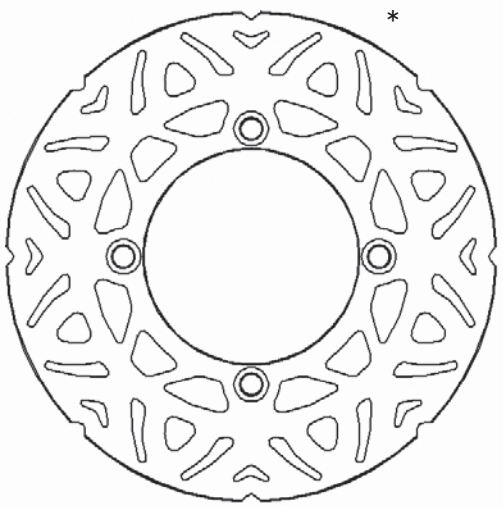

* l'immagine del prodotto è puramente indicativa
picture for illustrative purposes only

CODICE Reference	Ø ESTERNO Outer	Ø INTERNO Inner	SPESSORE Thickness	NR FORI No. holes	INTERASSE FORI Bolt patterns	Ø FORI Holes	CAMPANATURA Total height
DK199	245	115	5	4	133	8,5	0

CROSS REFERENCE		
ACCOSSATO	BREMBO	BRAKING
DK199	68B407N9	ND

CODICE OEM	
YAMAHA	2DMF582W0000

DK199					
MODELLO Model	CC	DA From	A To	ANT. Front	POST. Rear
YAMAHA					
X-MAX	125	2014	→		X
X-MAX	250	2014	→		X

ACCOSSATO

dischi freno brake rotor

APPLICAZIONI PER CODICE DISCO / applications for rotor code

DK
DK200

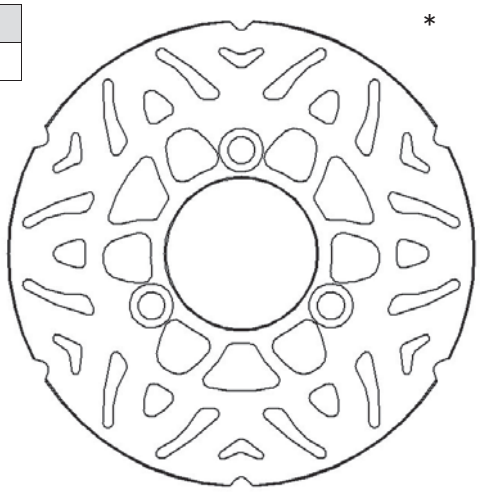

*

*** l'immagine del prodotto è puramente indicativa**
picture for illustrative purposes only

CODICE Reference	Ø ESTERNO Outer	Ø INTERNO Inner	SPESSORE Thickness	NR FORI No. holes	INTERASSE FORI Bolt patterns	Ø FORI Holes	CAMPANATURA Total height
DK200	220	106	4,5	3	126	8,5	0

CROSS REFERENCE		
ACCOSSATO	BREMBO	BRAKING
DK200	68B407P0	ND

CODICE OEM	
YAMAHA	1WDF582W0000

DK200					
MODELLO Model	CC	DA From	A To	ANT. Front	POST. Rear
YAMAHA					
YZF-R3	321	2015	→		

DK
DK201

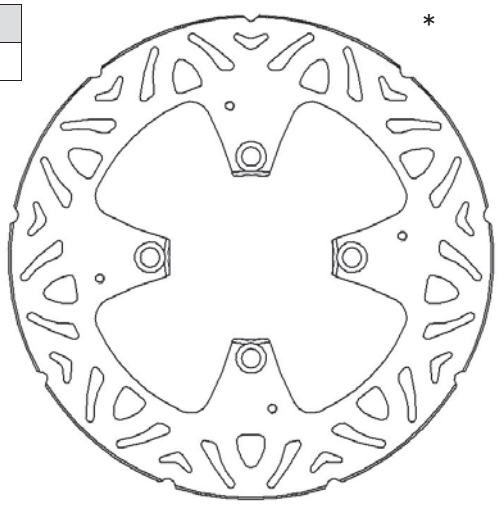

*

*** l'immagine del prodotto è puramente indicativa**
picture for illustrative purposes only

CODICE Reference	Ø ESTERNO Outer	Ø INTERNO Inner	SPESSORE Thickness	NR FORI No. holes	INTERASSE FORI Bolt patterns	Ø FORI Holes	CAMPANATURA Total height
DK201	220	54	4,5	4	76	8,5	0

CROSS REFERENCE		
ACCOSSATO	BREMBO	BRAKING
DK201	68B407G3	MB03FI

CODICE OEM	
MBK	5DSF58310000
YAMAHA	5DSF58310000

DK201					
MODELLO Model	CC	DA From	A To	ANT. Front	POST. Rear
MBK					
DOODO	125	2000	→	X	
SKYLINER	125	1999	2001	X	
SKYLINER	125	2002	2010	X	
DOODO	150	2001	→	X	
SKYLINER	150	2000	2000	X	
SKYLINER	150	2001	→	X	
SKYLINER	180	2003	→	X	
YAMAHA					
MAJESTY	125	1998	2000	X	
MAJESTY	125	2001	2009	X	
TEO'S	125	1999	2002	X	
TEO'S	125	2003	→	X	
MAJESTY	150	1998	2000	X	
MAJESTY	150	2001	2002	X	
MAJESTY	180	2001	2006	X	

dischi freno brake rotor

APPLICAZIONI PER CODICE DISCO / applications for rotor code

DK
DK202

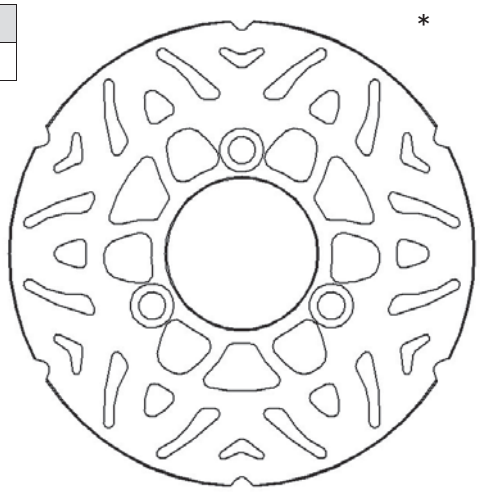

* **l'immagine del prodotto è puramente indicativa**
picture for illustrative purposes only

CODICE Reference	Ø ESTERNO Outer	Ø INTERNO Inner	SPESSORE Thickness	NR FORI No. holes	INTERASSE FORI Bolt patterns	Ø FORI Holes	CAMPANATURA Total height
DK202	200	58	3,5	3	80	8,6	0

CROSS REFERENCE		
ACCOSSATO	BREMBO	BRAKING
DK202	68B407M2	ND

CODICE OEM	
PEUGEOT	772101

DK202					
MODELLO Model	CC	DA From	A To	ANT. Front	POST. Rear
PEUGEOT					
DJANGO	50	2015	→	X	
VIVA-3	50	2012	→	X	
DJANGO	125	2015	→	X	
DJANGO-ALLURE	125	2014	→	X	
DJANGO-EVASION	125	2014	→	X	
DJANGO-HERITAGE	125	2014	→	X	
DJANGO-ID	125	2015	→	X	
DJANGO-SPORT	125	2015	→	X	
VIVA-3	125	2012	→	X	
DJANGO	150	2015	→	X	
DJANGO-ALLURE	150	2014	→	X	
DJANGO-EVASION	150	2015	→	X	
DJANGO-HERITAGE	150	2014	→	X	
DJANGO-ID	150	2015	→	X	
DJANGO-SPORT	150	2015	→	X	

DK
DK203

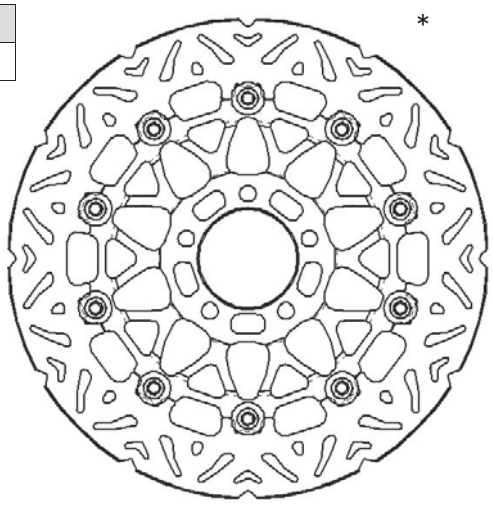

* **l'immagine del prodotto è puramente indicativa**
picture for illustrative purposes only

COLORI FASCIA FRENANTE / braking strip colours		
NERO	black	N

CODICE Reference	Ø ESTERNO Outer	Ø INTERNO Inner	SPESSORE Thickness	NR FORI No. holes	INTERASSE FORI Bolt patterns	Ø FORI Holes	CAMPANATURA Total height
DK203	310	82	4	5	100,5	10,5	/

CROSS REFERENCE		
ACCOSSATO	BREMBO	BRAKING
DK203	78B40859	ND

CODICE OEM	
TRIUMPH	/

DK203					
MODELLO Model	CC	DA From	A To	ANT. Front	POST. Rear
TRIUMPH					
DAYTONA	675	2013	→	X	
DAYTONA-R	675	2013	→	X	

ACCOSSATO

dischi freno brake rotor

APPLICAZIONI PER CODICE DISCO / applications for rotor code

DK
DK204

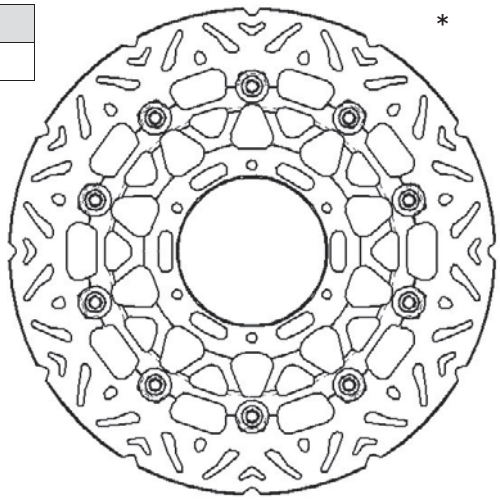

* **l'immagine del prodotto è puramente indicativa**
picture for illustrative purposes only

COLORI FASCIA FRENANTE / braking strip colours		
NERO	black	N
BLU	blue	B

CODICE Reference	Ø ESTERNO Outer	Ø INTERNO Inner	SPESSORE Thickness	NR FORI No. holes	INTERASSE FORI Bolt patterns	Ø FORI Holes	CAMPANATURA Total height
DK204	310	102	5	6	120	8,5	0

CROSS REFERENCE		
ACCOSSATO	BREMBO	BRAKING
DK204	78B40863	STX101

CODICE OEM	
SUZUKI	59210-37H00-000
SUZUKI	59210-37H10-000

DK204					
MODELLO Model	CC	DA From	A To	ANT. Front	POST. Rear
SUZUKI					
GSX-R	600	2008	→	X	
GSX-R	750	2008	→	X	
GSX-R	1000	2009	2014	X	

DK
DK205

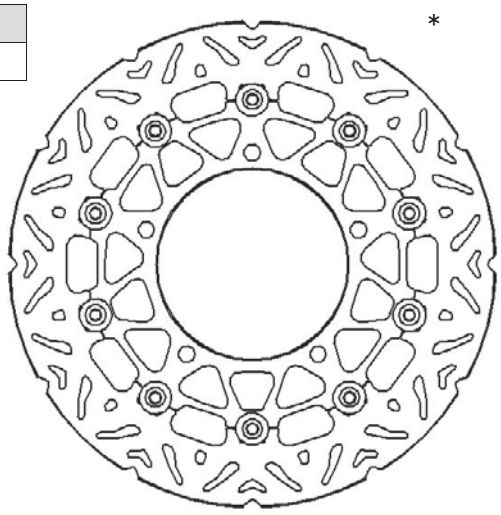

* **l'immagine del prodotto è puramente indicativa**
picture for illustrative purposes only

COLORI FASCIA FRENANTE / braking strip colours		
NERO	black	N

CODICE Reference	Ø ESTERNO Outer	Ø INTERNO Inner	SPESSORE Thickness	NR FORI No. holes	INTERASSE FORI Bolt patterns	Ø FORI Holes	CAMPANATURA Total height
DK205	310	100	5	5	120	10,5	0

CROSS REFERENCE		
ACCOSSATO	BREMBO	BRAKING
DK205	78B40864	STX76

CODICE OEM	
SUZUKI	59210-41G20-000
SUZUKI	59210-41G00-000
SUZUKI	59210-41G30-000

DK205					
MODELLO Model	CC	DA From	A To	ANT. Front	POST. Rear
SUZUKI					
GSX-R	600	2006	2007	X	
GSX-R	750	2006	2007	X	
GSX-R	1000	2005	2008	X	

dischi freno brake rotor

APPLICAZIONI PER CODICE DISCO / applications for rotor code

DK
DK206

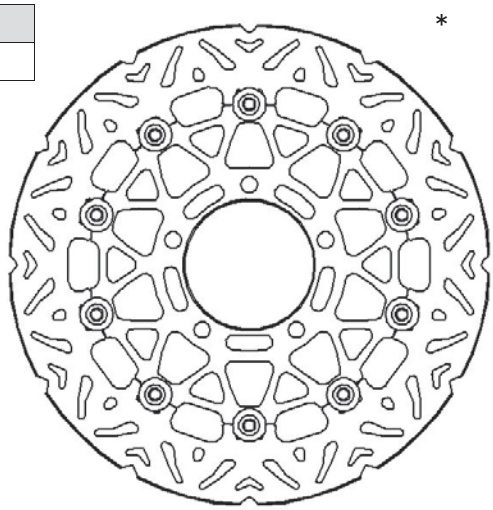

* **l'immagine del prodotto è puramente indicativa**
picture for illustrative purposes only

COLORI FASCIA FRENANTE / braking strip colours		
NERO	black	N

CODICE Reference	Ø ESTERNO Outer	Ø INTERNO Inner	SPESSORE Thickness	NR FORI No. holes	INTERASSE FORI Bolt patterns	Ø FORI Holes	CAMPANATURA Total height
DK206	310	82,3	4,5	5	100,5	10,5	/

CROSS REFERENCE		
ACCOSSATO	BREMBO	BRAKING
DK206	78B40869	ND

CODICE OEM	
TRIUMPH	/

DK206					
MODELLO Model	CC	DA From	A To	ANT. Front	POST. Rear
TRIUMPH					
STREET-TRIPLE	675	2013	→	X	
STREET-TRIPLE-R	675	2013	→	X	
STREET-TRIPLE-RX	675	2015	→	X	

DK
DK207

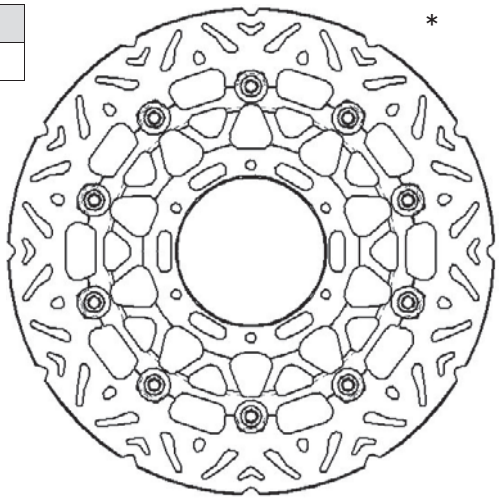

* **l'immagine del prodotto è puramente indicativa**
picture for illustrative purposes only

COLORI FASCIA FRENANTE / braking strip colours		
NERO	black	N
ROSSO	red	R

CODICE Reference	Ø ESTERNO Outer	Ø INTERNO Inner	SPESSORE Thickness	NR FORI No. holes	INTERASSE FORI Bolt patterns	Ø FORI Holes	CAMPANATURA Total height
DK207	320	94	5	6	110	6,5	15,25

CROSS REFERENCE		
ACCOSSATO	BREMBO	BRAKING
DK207	78B40876	STX98

CODICE OEM	
HONDA	/

DK207					
MODELLO Model	CC	DA From	A To	ANT. Front	POST. Rear
HONDA					
CBR-RR	1000	2008	→	X	
CBR-RR-ABS	1000	2009	→	X	
CBR-RR-FIREBLADE	1000	2014	→	X	
CBR-RR-SP	1000	2014	→	X	

ACCOSSATO

dischi freno brake rotor

APPLICAZIONI PER CODICE DISCO / applications for rotor code

DK
DK208

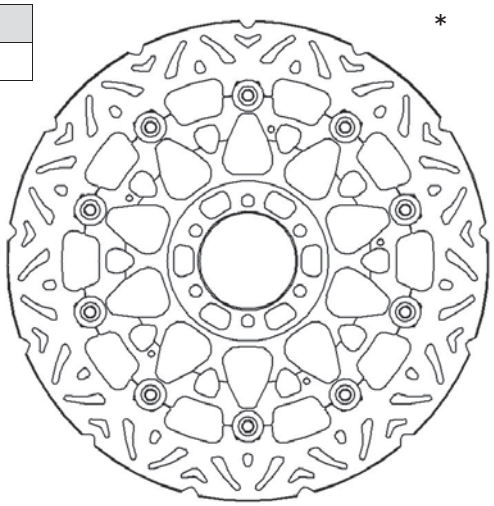

* **l'immagine del prodotto è puramente indicativa**
picture for illustrative purposes only

COLORI FASCIA FRENANTE / braking strip colours		
NERO	black	N

CODICE Reference	Ø ESTERNO Outer	Ø INTERNO Inner	SPESSORE Thickness	NR FORI No. holes	INTERASSE FORI Bolt patterns	Ø FORI Holes	CAMPANATURA Total height
DK208	305	64	5	6	80	8,6	/

CROSS REFERENCE		
ACCOSSATO	BREMBO	BRAKING
DK208	78B408A7	ND

CODICE OEM	
KTM	/

DK208					
MODELLO Model	CC	DA From	A To	ANT. Front	POST. Rear
KTM					
SUPERMOTO-R	950	2006	2008	X	
SUPERMOTO-R	990	2010	2012	X	

DK
DK209

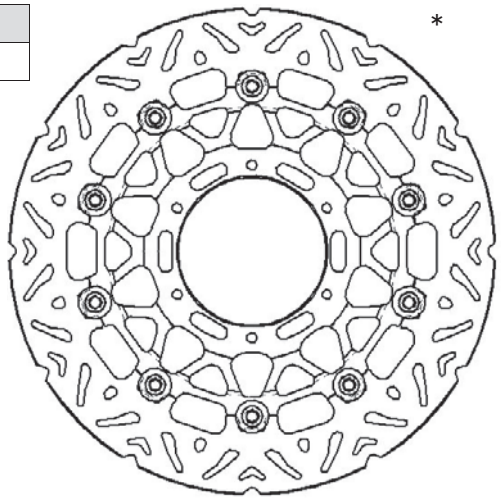

* **l'immagine del prodotto è puramente indicativa**
picture for illustrative purposes only

COLORI FASCIA FRENANTE / braking strip colours		
NERO	black	N

CODICE Reference	Ø ESTERNO Outer	Ø INTERNO Inner	SPESSORE Thickness	NR FORI No. holes	INTERASSE FORI Bolt patterns	Ø FORI Holes	CAMPANATURA Total height
DK209	320	124,5	4,5	6	143	6,6	/

CROSS REFERENCE		
ACCOSSATO	BREMBO	BRAKING
DK209	78B408A8	ND

CODICE OEM	
KTM	/

DK209					
MODELLO Model	CC	DA From	A To	ANT. Front	POST. Rear
KTM					
SMC-R	690	2014	→	X	
SMR-R	690	2014	→	X	

dischi freno brake rotor

APPLICAZIONI PER CODICE DISCO / applications for rotor code

DK
DK210

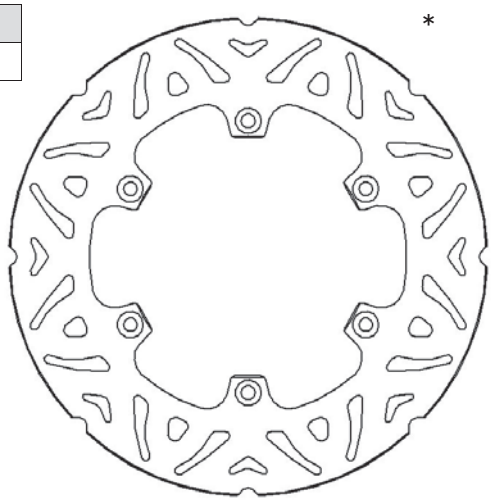

*

*** l'immagine del prodotto è puramente indicativa**
picture for illustrative purposes only

CODICE Reference	Ø ESTERNO Outer	Ø INTERNO Inner	SPESSORE Thickness	NR FORI No. holes	INTERASSE FORI Bolt patterns	Ø FORI Holes	CAMPANATURA Total height
DK210	200	58	4	5	80	10,5	0

CROSS REFERENCE		
ACCOSSATO	BREMBO	BRAKING
DK210	68B40724	ND

CODICE OEM	
KYMCO	156976

DK210					
MODELLO Model	CC	DA From	A To	ANT. Front	POST. Rear
KYMCO					
GRAND-DINK	125	2002	2007		X
GRAND-DINK	150	2002	2007		X
NEW-DINK	200	2008	→		X
GRAND-DINK	250	2000	2006		X
YUP	250	2003	→		X

DK
DK211

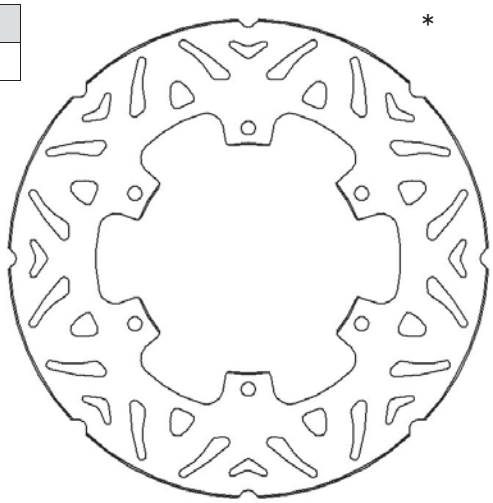

*

*** l'immagine del prodotto è puramente indicativa**
picture for illustrative purposes only

CODICE Reference	Ø ESTERNO Outer	Ø INTERNO Inner	SPESSORE Thickness	NR FORI No. holes	INTERASSE FORI Bolt patterns	Ø FORI Holes	CAMPANATURA Total height
DK211	220	90	4	6	101,5	6,25	0

CROSS REFERENCE		
ACCOSSATO	BREMBO	BRAKING
DK211	68B40735	ND

CODICE OEM	
BENELLI	R44810021A0
MALAGUTI	11948300
MALAGUTI	11952100

DK211					
MODELLO Model	CC	DA From	A To	ANT. Front	POST. Rear
BENELLI					
VELVET	125	1999	2004		X
VELVET-TOURING	125	2001	→		X
VELVET	150	2000	2004		X
VELVET-TOURING	150	2001	→		X
VELVET	250	1999	→		X
VELVET-TOURING	250	2001	→		X
MALAGUTI					
F18-PROJECT	125	2000	→	X	X
F18-WARRIOR	125	2000	→	X	X
MADISON	125	1999	→	X	X
MADISON-BLACK-RIDER	125	2003	→	X	X
PHANTOM-MAX	125	2003	→	X	X
F18-PROJECT	150	2000	→	X	X
F18-WARRIOR	150	2000	→	X	X
MADISON	150	1999	→	X	X
MADISON	180	1999	→	X	X
MADISON	200	2002	→	X	X
MADISON-BLACK-RIDER	200	2003	→	X	
PHANTOM-MAX	200	2003	→	X	X
MADISON	250	1999	2003	X	X
MADISON-3	250	2008	→	X	
MADISON-RS	250	2004	→	X	X
PHANTOM-MAX	250	2005	2006	X	X

ACCOSSATO

dischi freno brake rotor

APPLICAZIONI PER CODICE DISCO / applications for rotor code

DK
DK212

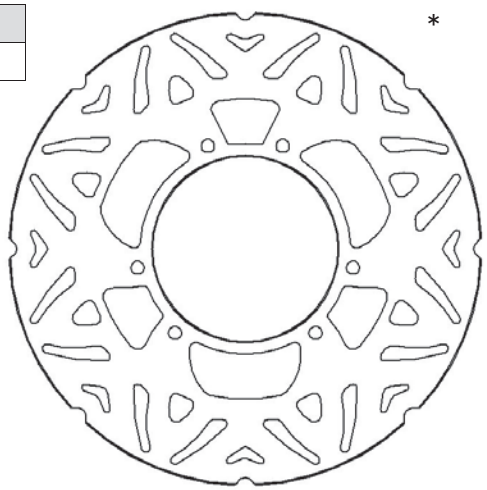

*

*** l'immagine del prodotto è puramente indicativa**
picture for illustrative purposes only

CODICE Reference	Ø ESTERNO Outer	Ø INTERNO Inner	SPESSORE Thickness	NR FORI No. holes	INTERASSE FORI Bolt patterns	Ø FORI Holes	CAMPANATURA Total height
DK212	220	115	5	6	133	8,5	0

CROSS REFERENCE		
ACCOSSATO	BREMBO	BRAKING
DK212	68B40755	YA24RI

CODICE OEM	
YAMAHA	5EB2582W0000

DK212					
MODELLO Model	CC	DA From	A To	ANT. Front	POST. Rear
YAMAHA					
DT	200	1989	→		X
YZF-R6	600	1999	2002		X
YZF-R1	1000	2002	2003		X

DK
DK213

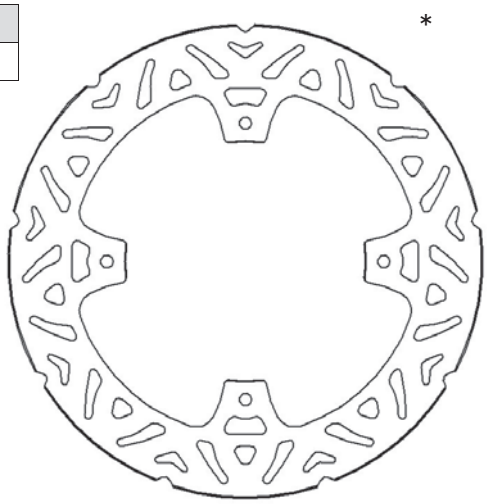

*

*** l'immagine del prodotto è puramente indicativa**
picture for illustrative purposes only

CODICE Reference	Ø ESTERNO Outer	Ø INTERNO Inner	SPESSORE Thickness	NR FORI No. holes	INTERASSE FORI Bolt patterns	Ø FORI Holes	CAMPANATURA Total height
DK213	240	92	5	4	114	8,5	0

CROSS REFERENCE		
ACCOSSATO	BREMBO	BRAKING
DK213	68B40778	ND

CODICE OEM	
MBK	5SEF582W0000
YAMAHA	1B9F582W0100
YAMAHA	5SEF582W1000

DK213					
MODELLO Model	CC	DA From	A To	ANT. Front	POST. Rear
MBK					
KILIBRE	300	2003	2004		X
YAMAHA					
X-CITY	125	2008	→		X
X-MAX	125	2005	2013		X
X-MAX	250	2005	2013		X
X-MAX-SPORT	250	2011	2013		X
X-CITY	250	2007	→		X
XC-VERSITY	300	2003	2004		X
XC-VERSITY	300	2004	2006		X

dischi freno brake rotor

APPLICAZIONI PER CODICE DISCO / applications for rotor code

DK
DK214

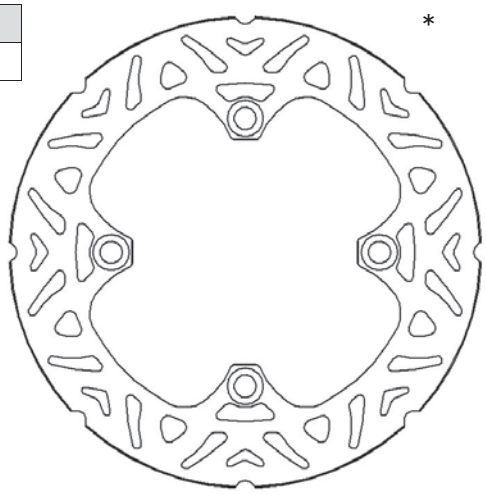

* l'immagine del prodotto è puramente indicativa
picture for illustrative purposes only

CODICE Reference	Ø ESTERNO Outer	Ø INTERNO Inner	SPESSORE Thickness	NR FORI No. holes	INTERASSE FORI Bolt patterns	Ø FORI Holes	CAMPANATURA Total height
DK214	240	116	4	4	133	10,5	0

CROSS REFERENCE		
ACCOSSATO	BREMBO	BRAKING
DK214	68B40782	ND

CODICE OEM	
KAWASAKI	410800076
SUZUKI	K4108-01514-000

DK214					
MODELLO Model	CC	DA From	A To	ANT. Front	POST. Rear
KAWASAKI					
KX	125	2003	2005		X
KX	125	2006	2008		X
KX	250	2003	2005		X
KX	250	2006	2008		X
KX-F	250	2004	2005		X
KX-F	250	2006	2013		X
KX-F	250	2014	→		X
KXE-F	250	2006	2007		X
KLX-F	450	2007	2009		X
KLX-R	450	2006	→		X
KX-F	450	2006	2014		X
KX-F	450	2015	→		X
SUZUKI					
RM-Z	250	2004	2006		X

DK
DK215

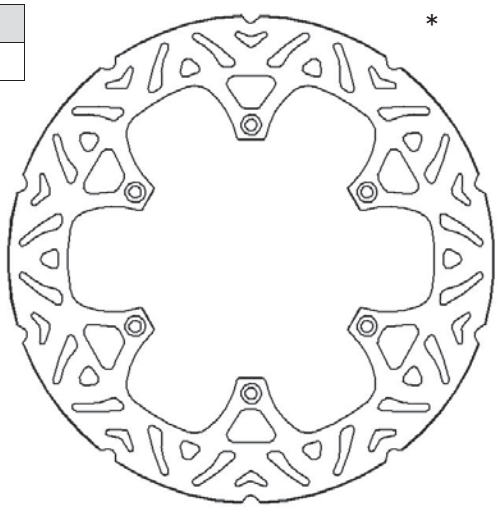

* l'immagine del prodotto è puramente indicativa
picture for illustrative purposes only

CODICE Reference	Ø ESTERNO Outer	Ø INTERNO Inner	SPESSORE Thickness	NR FORI No. holes	INTERASSE FORI Bolt patterns	Ø FORI Holes	CAMPANATURA Total height
DK215	240	118	4	6	134	6,5	0

CROSS REFERENCE		
ACCOSSATO	BREMBO	BRAKING
DK215	68B40784	ND

CODICE OEM	
SUZUKI	69211-37F10-000

DK215					
MODELLO Model	CC	DA From	A To	ANT. Front	POST. Rear
SUZUKI					
RM	125	2000	2009		X
RM	250	1999	2008		X
DRZ-SM	400	2005	2009		X

ACCOSSATO

dischi freno brake rotor

APPLICAZIONI PER CODICE DISCO / applications for rotor code

DK
DK216

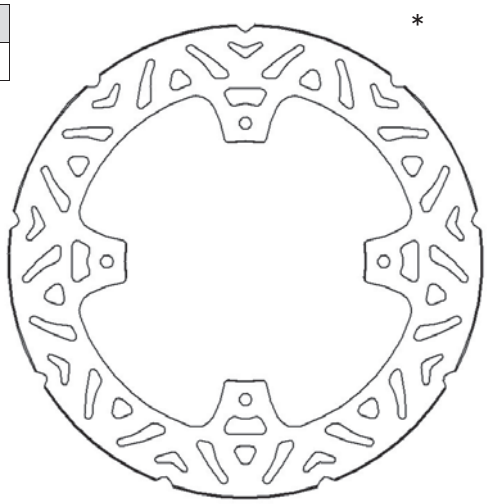

* l'immagine del prodotto è puramente indicativa
picture for illustrative purposes only

CODICE Reference	Ø ESTERNO Outer	Ø INTERNO Inner	SPESSORE Thickness	NR FORI No. holes	INTERASSE FORI Bolt patterns	Ø FORI Holes	CAMPANATURA Total height
DK216	240	122	4	4	140	10,5	0

CROSS REFERENCE		
ACCOSSATO	BREMBO	BRAKING
DK216	68B40788	ND

CODICE OEM	
SUZUKI	69211-35G10-000
SUZUKI	69211-28H10-000

DK216					
MODELLO Model	CC	DA From	A To	ANT. Front	POST. Rear
SUZUKI					
RM-Z	250	2007	→		X
RM-Z	450	2005	→		X
RMX	450	2010	2011		X

DK
DK217

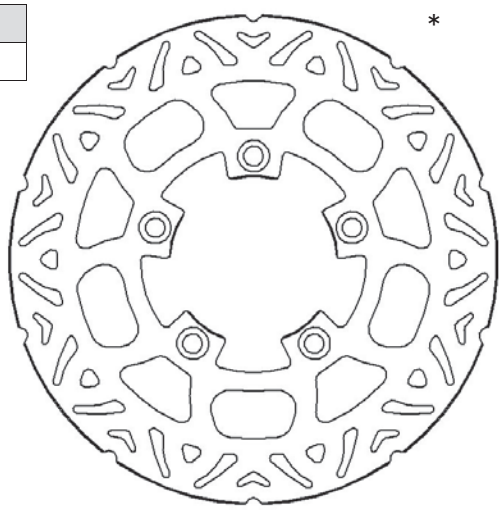

* l'immagine del prodotto è puramente indicativa
picture for illustrative purposes only

CODICE Reference	Ø ESTERNO Outer	Ø INTERNO Inner	SPESSORE Thickness	NR FORI No. holes	INTERASSE FORI Bolt patterns	Ø FORI Holes	CAMPANATURA Total height
DK217	245	105	5	5	125	8,5	0

CROSS REFERENCE		
ACCOSSATO	BREMBO	BRAKING
DK217	68B40793	ND

CODICE OEM	
YAMAHA	20S2582W0000

DK217					
MODELLO Model	CC	DA From	A To	ANT. Front	POST. Rear
YAMAHA					
DIVERSION	600	2009	→		X
XJ6	600	2009	2011		X

dischi freno brake rotor

APPLICAZIONI PER CODICE DISCO / applications for rotor code

DK
DK218

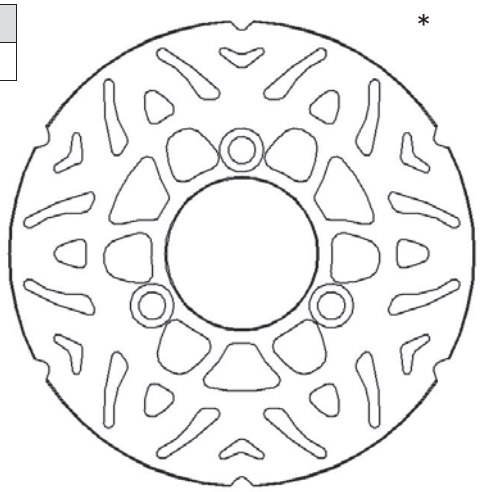

* l'immagine del prodotto è puramente indicativa
picture for illustrative purposes only

CODICE Reference	Ø ESTERNO Outer	Ø INTERNO Inner	SPESSORE Thickness	NR FORI No. holes	INTERASSE FORI Bolt patterns	Ø FORI Holes	CAMPANATURA Total height
DK218	190	63	5	3	80	8,5	0

CROSS REFERENCE		
ACCOSSATO	BREMBO	BRAKING
DK218	68B407G1	ND

CODICE OEM	
MBK	5NRF582W0000
YAMAHA	5NRF582W0000

DK218					
MODELLO Model	CC	DA From	A To	ANT. Front	POST. Rear
MBK					
SKYLINER	125	2002	2010		X
SKYLINER	150	2001	→		X
SKYLINER	180	2003	→		X
YAMAHA					
MAJESTY	125	2001	2009		X
MAJESTY	150	2001	2002		X
MAJESTY	180	2001	2006		X

DK
DK219

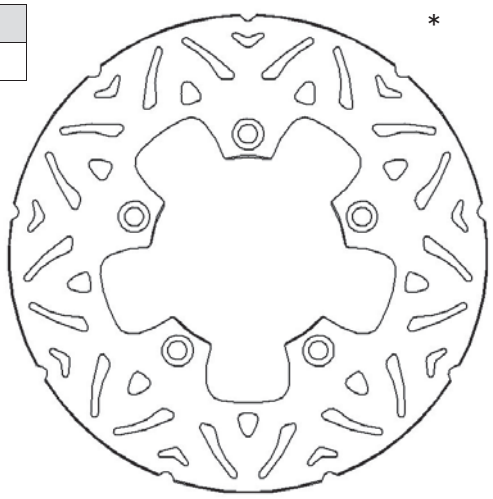

* l'immagine del prodotto è puramente indicativa
picture for illustrative purposes only

CODICE Reference	Ø ESTERNO Outer	Ø INTERNO Inner	SPESSORE Thickness	NR FORI No. holes	INTERASSE FORI Bolt patterns	Ø FORI Holes	CAMPANATURA Total height
DK219	220	102	4,5	5	120	8,5	0

CROSS REFERENCE		
ACCOSSATO	BREMBO	BRAKING
DK219	68B407G2	ND

CODICE OEM	
APRILIA	AP8133627
APRILIA	AP8213317
MBK	5HTF582W0000
MONDIAL	/
YAMAHA	5HTF582W0000

DK219					
MODELLO Model	CC	DA From	A To	ANT. Front	POST. Rear
APRILIA					
RS	50	1999	2005		X
TUONO	50	2003	2004		X
TUONO	125	2004	2005		X
SCARABEO I.E.	200	2007	→		X
SCARABEO LIGHT	200	2007	→		X
RS	250	1994	→		X
SCARABEO LIGHT	400	2007	→		X
MBK					
THUNDER	125	2001	→		X
MONDIAL					
PIEGA	999	2003	→		X
PIEGA-EVO	999	2003	→		X
PIEGA-NUDA	999	2004	→		X
RZ-NUDA	999	2002	→		X
RZ-STARFIGHTER	999	2002	→		X
YAMAHA					
MAXSTER	125	2001	→		X
TEO'S	125	2003	→		X
MAXSTER	150	2001	→		X
TEO'S	150	2003	→		X

ACCOSSATO

dischi freno brake rotor

APPLICAZIONI PER CODICE DISCO / applications for rotor code

DK
DK220

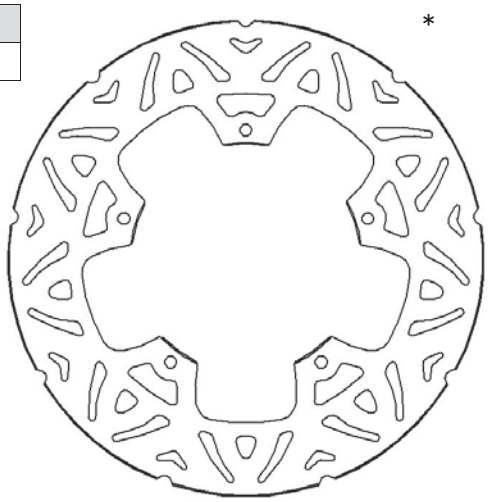

* l'immagine del prodotto è puramente indicativa
picture for illustrative purposes only

CODICE Reference	Ø ESTERNO Outer	Ø INTERNO Inner	SPESSORE Thickness	NR FORI No. holes	INTERASSE FORI Bolt patterns	Ø FORI Holes	CAMPANATURA Total height
DK220	240	125	5	5	140	6,5	0

CROSS REFERENCE		
ACCOSSATO	BREMBO	BRAKING
DK220	68B407J6	RF8519

CODICE OEM	
PIAGGIO	/

DK220					
MODELLO Model	CC	DA From	A To	ANT. Front	POST. Rear
PIAGGIO					
X10-EXECUTIVE	125	2013	→		X
X10-EXECUTIVE-ABS	350	2012	→		X
X10-EXECUTIVE	500	2012	→		X

DK
DK221

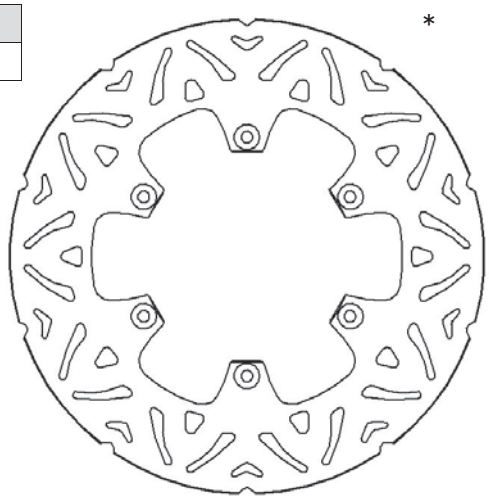

* l'immagine del prodotto è puramente indicativa
picture for illustrative purposes only

CODICE Reference	Ø ESTERNO Outer	Ø INTERNO Inner	SPESSORE Thickness	NR FORI No. holes	INTERASSE FORI Bolt patterns	Ø FORI Holes	CAMPANATURA Total height
DK221	282	157	6	6	176	8,6	0

CROSS REFERENCE		
ACCOSSATO	BREMBO	BRAKING
DK221	68B407K1	ND

CODICE OEM	
MOTOGUZZI	/

DK221					
MODELLO Model	CC	DA From	A To	ANT. Front	POST. Rear
MOTO GUZZI					
CALIFORNIA-CUSTOM	1400	2013	→		X
CALIFORNIA-TOURING	1400	2013	→		X
ELDORADO	1400	2015	→		X

dischi freno brake rotor

APPLICAZIONI PER CODICE DISCO / applications for rotor code

DK
DK222

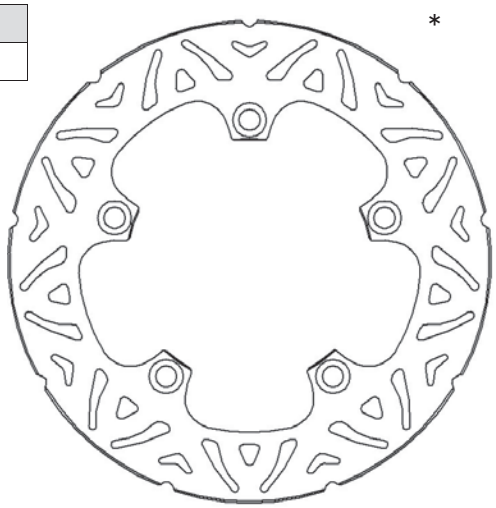

* l'immagine del prodotto è puramente indicativa
picture for illustrative purposes only

CODICE Reference	Ø ESTERNO Outer	Ø INTERNO Inner	SPESSORE Thickness	NR FORI No. holes	INTERASSE FORI Bolt patterns	Ø FORI Holes	CAMPANATURA Total height
DK222	240	127	6	5	141	6,5	0

CROSS REFERENCE		
ACCOSSATO	BREMBO	BRAKING
DK222	68B407L8	ND

CODICE OEM	
PEUGEOT	/

DK222					
MODELLO Model	CC	DA From	A To	ANT. Front	POST. Rear
PEUGEOT					
METROPOLIS-GT	400	2014	→		X
METROPOLIS-i	400	2014	→		X
METROPOLIS-i-SPORT	400	2014	→		X
METROPOLIS-RS	400	2014	→		X

DK
DK223

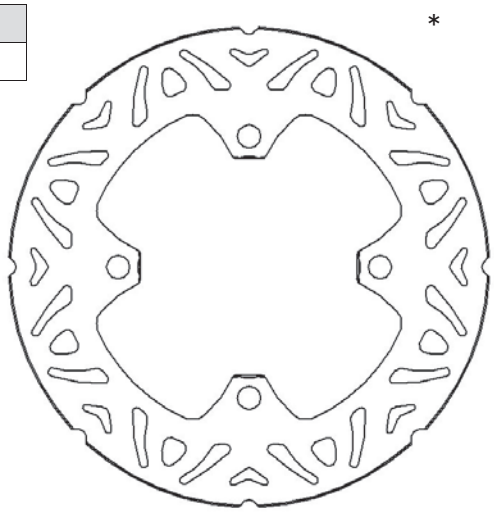

* l'immagine del prodotto è puramente indicativa
picture for illustrative purposes only

CODICE Reference	Ø ESTERNO Outer	Ø INTERNO Inner	SPESSORE Thickness	NR FORI No. holes	INTERASSE FORI Bolt patterns	Ø FORI Holes	CAMPANATURA Total height
DK223	240	0	5	4	136	10,5	0

CROSS REFERENCE		
ACCOSSATO	BREMBO	BRAKING
DK223	68B407L9	ND

CODICE OEM	
HONDA	/

DK223					
MODELLO Model	CC	DA From	A To	ANT. Front	POST. Rear
HONDA					
CB-F	500	2013	→		X
CB-X	500	2013	→		X
CBR-R	500	2013	→		X
CB-F	650	2014	→		X
CBR-F	650	2014	→		X

ACCOSSATO

dischi freno brake rotor

APPLICAZIONI PER CODICE DISCO / applications for rotor code

DK
DK224

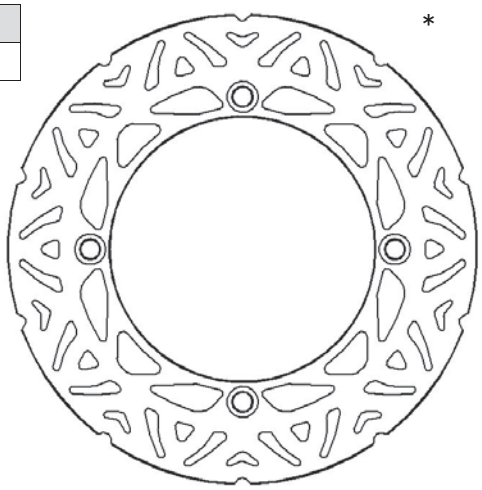

*

*** l'immagine del prodotto è puramente indicativa**
picture for illustrative purposes only

CODICE Reference	Ø ESTERNO Outer	Ø INTERNO Inner	SPESSORE Thickness	NR FORI No. holes	INTERASSE FORI Bolt patterns	Ø FORI Holes	CAMPANATURA Total height
DK224	220	105	5	4	125	10,5	0

CROSS REFERENCE		
ACCOSSATO	BREMBO	BRAKING
DK224	68B407M0	ND

CODICE OEM	
HONDA	/

DK224					
MODELLO Model	CC	DA From	A To	ANT. Front	POST. Rear
HONDA					
CBR-R	250	2011	2013		X
CBR-R-ABS	250	2011	2013		X
CBR-R-ABS-TRICOLORE	250	2014	→		X
CBR	300	2015	→		X
CBR-ABS	300	2015	→		X
CBR-ABS-HRC-TRICOLORE	300	2014	→		X
CBR-R	300	2014	→		X
CBR-R-ABS	300	2015	→		X

DK
DK225

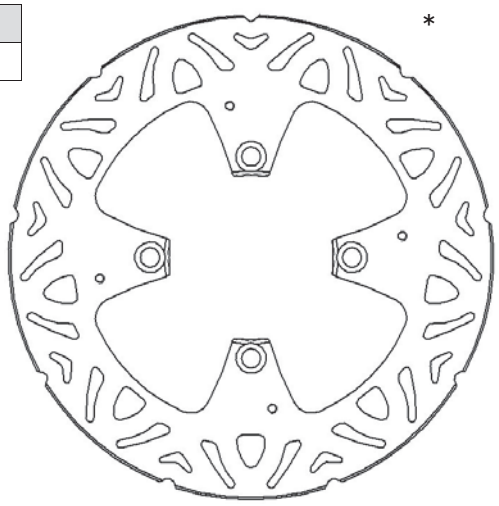

*

*** l'immagine del prodotto è puramente indicativa**
picture for illustrative purposes only

CODICE Reference	Ø ESTERNO Outer	Ø INTERNO Inner	SPESSORE Thickness	NR FORI No. holes	INTERASSE FORI Bolt patterns	Ø FORI Holes	CAMPANATURA Total height
DK225	256	70	6	4	110	8,5	0

CROSS REFERENCE		
ACCOSSATO	BREMBO	BRAKING
DK225	68B407M6	ND

CODICE OEM	
HONDA	/

DK225					
MODELLO Model	CC	DA From	A To	ANT. Front	POST. Rear
HONDA					
VFR-F	750	1994	1997		X
CROSSRUNNER	800	2011	→		X
VFR-INTERCEPTOR	800	1998	2010		X

dischi freno brake rotor

APPLICAZIONI PER CODICE DISCO / applications for rotor code

DK
DK226

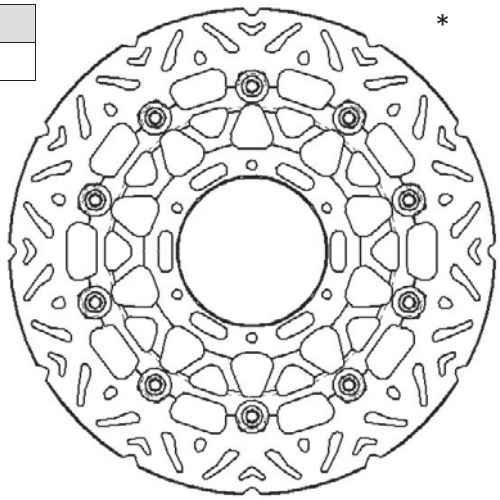

* **l'immagine del prodotto è puramente indicativa**
picture for illustrative purposes only

COLORI FASCIA FRENANTE / braking strip colours		
NERO	black	N

CODICE Reference	Ø ESTERNO Outer	Ø INTERNO Inner	SPESSORE Thickness	NR FORI No. holes	INTERASSE FORI Bolt patterns	Ø FORI Holes	CAMPANATURA Total height
DK226	240	110	5	6	125	6,6	/

CROSS REFERENCE		
ACCOSSATO	BREMBO	BRAKING
DK226	78B408A9	ND

CODICE OEM	
KTM	/

DK226					
MODELLO Model	CC	DA From	A To	ANT. Front	POST. Rear
KTM					
ENDURO-R	690	2014	→		X
SMC-R	690	2014	→		X
SMR-R	690	2014	→		X

DK
DK227

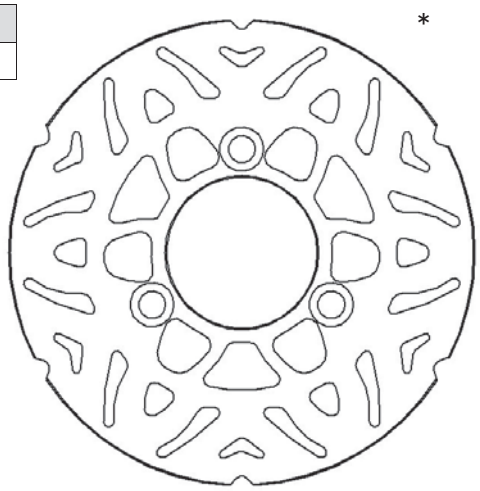

* **l'immagine del prodotto è puramente indicativa**
picture for illustrative purposes only

CODICE Reference	Ø ESTERNO Outer	Ø INTERNO Inner	SPESSORE Thickness	NR FORI No. holes	INTERASSE FORI Bolt patterns	Ø FORI Holes	CAMPANATURA Total height
DK227	190	58	3,5	3	80	8,6	0

CROSS REFERENCE		
ACCOSSATO	BREMBO	BRAKING
DK227	68B40717	ND

CODICE OEM	
APRILIA	AP8213231
BETA	/
FANTIC	/
GILERA	561714
KL	/
MBK	5ADF58310000
MONDIAL	/
PEUGEOT	/
PIAGGIO	/
YAMAHA	5ADF58310000

DK227					
MODELLO Model	CC	DA From	A To	ANT. Front	POST. Rear
APRILIA					
AREA 51	50	1998	2002	X	
GULLIVER	50	1995	2000	X	
HABANA	50	1999	→	X	
HABANA CUSTOM	50	1999	→	X	
MC GULLIVER	50	1995	→	X	
MOJITO	50	2004	2008	X	
MOJITO CUSTOM	50	1999	2003	X	
MOJITO RETRO	50	1999	2003	X	
RALLY	50	1992	1996	X	
RALLY	50	1997	→	X	X
RALLY AC	50	1996	→	X	
RALLY LC	50	1992	1996	X	
RALLY LC	50	1997	→	X	X
SCARABEO	50	1998	2005		X
SCARABEO 4T	50	2002	2009		X
SCARABEO BRIGHT	50	1998	→		X
SCARABEO DE LUXE	50	1998	→		X
SCARABEO DITECH	50	2002	2004		X
SR CAPIROSSI	50	1998	→	X	X
SR DITECH	50	2000	2006	X	X
SR EUROPA	50	1993	→	X	
SR LC	50	1994	1996	X	

ACCOSSATO

dischi freno brake rotor

APPLICAZIONI PER CODICE DISCO / applications for rotor code

DK227					
MODELLO Model	CC	DA From	A To	ANT. Front	POST. Rear
SR PUREJET	50	2003	2005	X	X
SR R	50	2005	→	X	X
SR R FACTORY	50	2003	2004	X	X
SR R FACTORY	50	2005	2008		X
SR R FACTORY	50	2009	→	X	X
SR R FACTORY REPLICA SBK	50	2010	→	X	X
SR RACING	50	1997	2000	X	X
SR STEALTH LC	50	1997	2000	X	X
SR URBAN KID	50	1993	→	X	
SR VIPER REPLICA	50	1994	→	X	
VIPER-REPLICA	50	1994	→	X	
HABANA	125	1999	→	X	
HABANA CUSTOM	125	2000	→	X	
HABANA DITECH	125	2002	→	X	
MOJITO	125	2003	2008	X	
MOJITO CUSTOM	125	1999	2001	X	
MOJITO RETRO	125	1999	2001	X	
SR STREET	50	2003	2012		X
LEONARDO	125	1995	2002		X
LEONARDO ST	125	2003	→		X
SR	125	1999	2003	X	X
SR REPLICA	125	1999	2001	X	X
SR MAX	125	2010	→		X
LEONARDO	150	1996	1998		X
MOJITO	150	2003	2007	X	
SR	150	1999	2003	X	X
SR REPLICA	150	1999	→	X	X
LEONARDO	300	2005	2006		X
BETA					
ARK	50	1999	→	X	
FANTIC					
LEADER	50	1995	→		
GILERA					
STALKER	50	1998	→	X	
STORM	50	1996	2001	X	
TYPHOON	50	1996	→	X	

DK227					
MODELLO Model	CC	DA From	A To	ANT. Front	POST. Rear
TYPHOON-BENETTON	50	1993	1995	X	
TYPHOON-MARTINI	50	1996	→	X	
TYPHOON-XR	50	1996	→	X	
RUNNER	125	1995	2005	X	
TYPHOON-XR	125	1995	→	X	
KL					
HELIOS	50	1998	→	X	
KRYPTON	50	1999	→	X	
XR7	50	1998	→	X	
NOX	125	2000	2001	X	
PROXY	125	2001	→	X	
PULSAR	125	2000	→	X	
NOX	150	2000	→	X	
PROXY	150	2001	→	X	
PULSAR	150	2000	→	X	
MBK					
NEO'S	50	1994	→	X	
OVETTO	50	1996	2010	X	
OVETTO	100	2000	2002	X	
MONDIAL					
XR7	50	1999	→	X	
PEUGEOT					
BUXY-R	50	1993	1997	X	
PIAGGIO					
NRG-RST-MC2	50	1996	1998	X	
NTT	50	1996	→	X	
STORM	50	1994	→	X	
TYPHOON	50	1994	→	X	
TYPHOON	80	1996	→	X	
TYPHOON	125	1996	2000	X	
TYPHOON-CATALIZ.	125	2002	→	X	
YAMAHA					
NEO'S	50	1996	2006	X	
OVETTO	50	1996	→	X	
NEO'S	100	1996	→	X	
NEO'S	100	2000	2002	X	

dischi freno brake rotor

APPLICAZIONI PER CODICE DISCO / applications for rotor code

DKS
DKS002

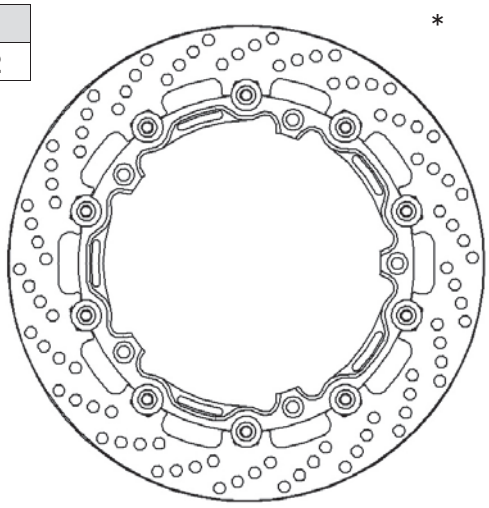

* **l'immagine del prodotto è puramente indicativa**
picture for illustrative purposes only

COLORI FASCIA FRENANTE / braking strip colours		
NERO	black	N

CODICE Reference	Ø ESTERNO Outer	Ø INTERNO Inner	SPESSORE Thickness	NR FORI No. holes	INTERASSE FORI Bolt patterns	Ø FORI Holes	CAMPANATURA Total height
DKS002	320	180,5	5,5	5	203	8,5	7,5

CROSS REFERENCE		
ACCOSSATO	BREMBO	BRAKING
DKS002	208973751	ND

DKS002					
MODELLO Model	CC	DA From	A To	ANT. Front	POST. Rear
BMW					
S-1000-R	1000	2014	→	X	
S-1000-RR	1000	2009	→	X	

DKS
DKS003

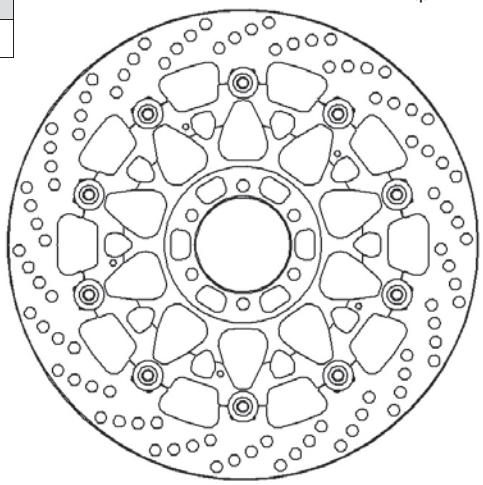

* **l'immagine del prodotto è puramente indicativa**
picture for illustrative purposes only

COLORI FASCIA FRENANTE / braking strip colours		
NERO	black	N
ORO	gold	Y
ROSSO	red	R

CODICE Reference	Ø ESTERNO Outer	Ø INTERNO Inner	SPESSORE Thickness	NR FORI No. holes	INTERASSE FORI Bolt patterns	Ø FORI Holes	CAMPANATURA Total height
DKS003	320	64	5,5	6	80	8,5	10,25

CROSS REFERENCE		
ACCOSSATO	BREMBO	BRAKING
DKS003	208973725	ND

DKS003					
MODELLO Model	CC	DA From	A To	ANT. Front	POST. Rear
APRILIA					
RSV	1000	1998	2000	X	
RSV	1000	2001	2003	X	
RSV-FACTORY	1000	2003	2007	X	
RSV-R	1000	2000	2008	X	
RSV-SP	1000	1999	2000	X	
RSV4-FACTORY	1000	2009	2011	X	
RSV4-FACTORY-APRC	1000	2011	2012	X	
RSV4-FACTORY-APRC-ABS	1000	2013	→	X	
RSV4-R	1000	2010	2010	X	
RSV4-RF	1000	2015	→	X	
RSV4-RR	1000	2015	→	X	
TUONO	1000	2003	→	X	
TUONO-FIGHTER	1000	2002	2005	X	
TUONO-R	1000	2003	2009	X	
TUONO-RACING	1000	2004	2005	X	
TUONO-V4-FACTORY	1000	2015	→	X	
TUONO-V4-FACTORY-RR	1000	2015	→	X	
TUONO-V4R	1000	2011	→	X	
TUONO-V4R-APRC	1000	2011	→	X	
TUONO-V4R-APRC-ABS	1000	2014	→	X	

ACCOSSATO

dischi freno brake rotor

APPLICAZIONI PER CODICE DISCO / applications for rotor code

DKS
DKS004

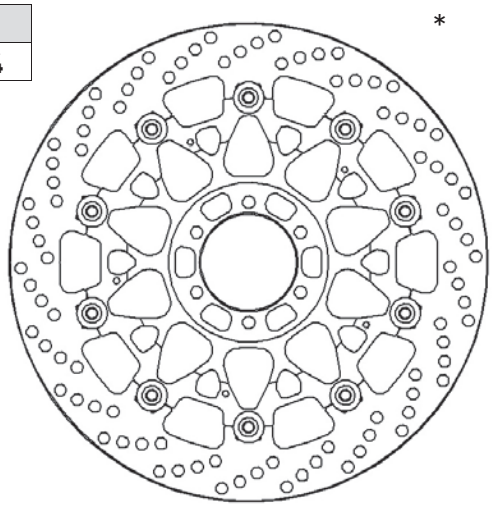

* **l'immagine del prodotto è puramente indicativa**
picture for illustrative purposes only

COLORI FASCIA FRENANTE / braking strip colours		
NERO	black	N
ROSSO	red	R

CODICE Reference	Ø ESTERNO Outer	Ø INTERNO Inner	SPESSORE Thickness	NR FORI No. holes	INTERASSE FORI Bolt patterns	Ø FORI Holes	CAMPANATURA Total height
DKS004	320	64	5,5	6	80	8,5	10,25

CROSS REFERENCE		
ACCOSSATO	BREMBO	BRAKING
DKS004	208973710	ND

DKS004					
MODELLO Model	CC	DA From	A To	ANT. Front	POST. Rear
BENELLI					
TNT-CENTURY-RACER	899	2011	→	X	
TRE-899-K	899	2011	→	X	
TORNADO-3-BIPOSTO	900	2002	2003	X	
TORNADO-3-L.E.	900	2003	2006	X	
TORNADO-3-RS	900	2004	2006	X	
TNT	1130	2004	→	X	
TNT	1130	2005	2006	X	
TNT-CAFE'-RACER	1130	2005	2007	X	
TNT-CAFE'-RACER	1130	2011	→	X	

DKS004					
MODELLO Model	CC	DA From	A To	ANT. Front	POST. Rear
TNT-CENTURY-RACER	1130	2011	→	X	
TNT-R-160	1130	2011	→	X	
TNT-RS	1130	2005	2006	X	
TNT-SPORT	1130	2005	→	X	
TNT-TITANIUM	1130	2005	2007	X	
TORNADO-TRE	1130	2006	→	X	
TORNADO-TRE-R	1130	2013	→	X	
TRE-K	1130	2006	2007	X	
TRE-K	1130	2011	→	X	
TRE-K-AMAZONAS	1130	2013	→	X	
BIMOTA					
BB3	1000	2014	→	X	
DUCATI					
748	748	2000	2002	X	
748-BIPOSTO	748	1995	1998	X	
748-BIPOSTO	748	1999	2002	X	
748-S	748	1999	2002	X	
748-SP	748	1995	1997	X	
748-SPS	748	1998	1999	X	
916	916	1994	1996	X	
916-BIPOSTO-SENNA	916	1994	1998	X	
916-RACING	916	1994	1997	X	
916-S	916	1994	1996	X	
916-SP	916	1994	1996	X	
916-SPS	916	1997	1998	X	
MONSTER-S4	916	2001	2003	X	
MONSTER-S4-FOGGY	916	2002	→	X	
996	996	1999	2001	X	
996-S	996	1999	2001	X	
996-SPS	996	1999	2001	X	
996-SPS-II	996	1999	2001	X	
996-SPS-III	996	1999	2001	X	
998	998	2002	→	X	
998-F.E.	998	2002	→	X	
998-MATRIX	998	2002	→	X	
998-S	998	2002	→	X	
MONSTER-S2-R-1000	1000	2006	2007	X	
MONSTER-S4-1000-R	1000	2003	2004	X	
MONSTER-S4-1000-R-(MONOBRACCIO)	1000	2005	2006	X	
KTM					
SUPER-DUKE	990	2005	2011	X	
SUPERDUKE-R	990	2007	2011	X	
RC8	1190	2008	2009	X	
YAMAHA					
YZF-R	750	1993	1997	X	
YZF-SP	750	1993	1997	X	

dischi freno brake rotor

APPLICAZIONI PER CODICE DISCO / applications for rotor code

DKS
DKS005

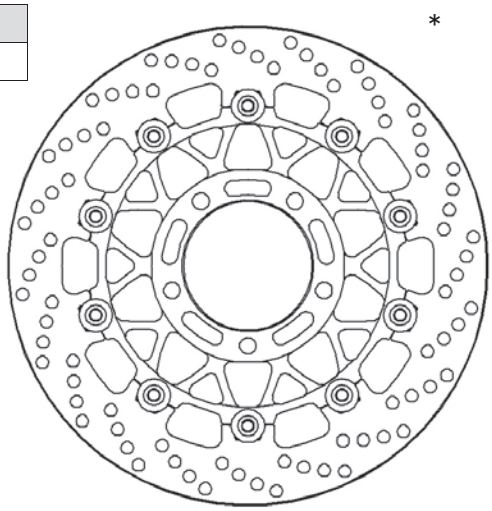

* **l'immagine del prodotto è puramente indicativa**
picture for illustrative purposes only

COLORI FASCIA FRENANTE / braking strip colours		
NERO	black	N
ROSSO	red	R

CODICE Reference	Ø ESTERNO Outer	Ø INTERNO Inner	SPESSORE Thickness	NR FORI No. holes	INTERASSE FORI Bolt patterns	Ø FORI Holes	CAMPANATURA Total height
DKS005	320	72	5,5	5	90	8,5	

CROSS REFERENCE		
ACCOSSATO	BREMBO	BRAKING
DKS005	208973711	ND

DKS005					
MODELLO Model	CC	DA From	A To	ANT. Front	POST. Rear
DUCATI					
749	748	2003	2007	X	
749-DARK	748	2003	2007	X	
749-R	748	2003	2007	X	
749-S	748	2003	2007	X	
848	848	2008	2010	X	
848-EVO	848	2011	→	X	
848-EVO-CORSE-SPECIAL-EDITION	848	2012	→	X	
PANIGALE	899	2014	→	X	
999	998	2003	2007	X	
999-R	998	2003	2007	X	
999-S	998	2003	2007	X	
999-XEROX	999	2003	2007	X	
MONSTER-S4-1000-RS	1000	2006	2006	X	
MONSTER-S	1100	2009	2010	X	

DKS
DKS006

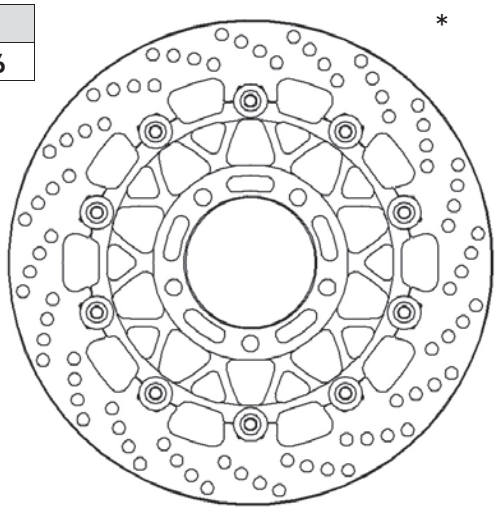

* **l'immagine del prodotto è puramente indicativa**
picture for illustrative purposes only

COLORI FASCIA FRENANTE / braking strip colours		
NERO	black	N
ROSSO	red	R

CODICE Reference	Ø ESTERNO Outer	Ø INTERNO Inner	SPESSORE Thickness	NR FORI No. holes	INTERASSE FORI Bolt patterns	Ø FORI Holes	CAMPANATURA Total height
DKS006	320	72	5	5	90	8,5	

CROSS REFERENCE		
ACCOSSATO	BREMBO	BRAKING
DKS006	208973736	ND

DKS006					
MODELLO Model	CC	DA From	A To	ANT. Front	POST. Rear
DUCATI					
STREETFIGHTER	848	2012	→	X	
STREETFIGHTER-S	848	2012	→	X	
MONSTER	1100	2009	→	X	
MONSTER-EVO-ABS	1100	2011	→	X	
MONSTER-EVO-ABS-ANNIVERSARY	1100	2011	2011	X	
MONSTER	1200	2014	→	X	
MONSTER-R	1200	2015	→	X	
MONSTER-S	1200	2014	→	X	
MONSTER-S-STRIPE	1200	2015	→	X	
MULTISTRADA	1200	2010	2012	X	
MULTISTRADA	1200	2015	→	X	
MULTISTRADA-ABS	1200	2010	→	X	
MULTISTRADA-S	1200	2015	→	X	
MULTISTRADA-S-D-AIR	1200	2015	→	X	
MULTISTRADA-S-GT	1200	2013	→	X	
MULTISTRADA-S-PIKES-PEAK	1200	2013	→	X	
MULTISTRADA-S-TOURING	1200	2013	→	X	
MULTISTRADA-TOURING-ABS	1200	2010	→	X	

ACCOSSATO

dischi freno brake rotor

APPLICAZIONI PER CODICE DISCO / applications for rotor code

DKS
DKS007

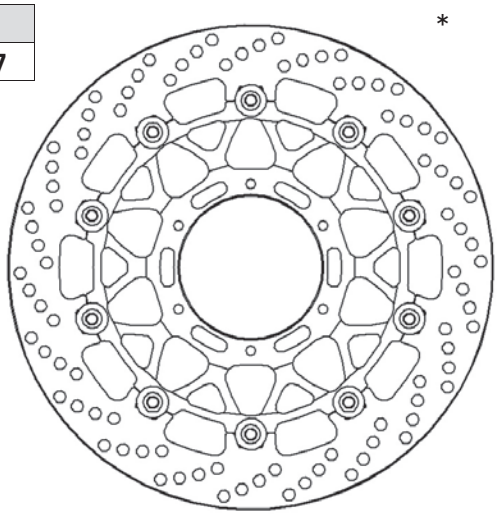

* **l'immagine del prodotto è puramente indicativa**
picture for illustrative purposes only

COLORI FASCIA FRENANTE / braking strip colours		
NERO	black	N
ROSSO	red	R

CODICE Reference	Ø ESTERNO Outer	Ø INTERNO Inner	SPESSORE Thickness	NR FORI No. holes	INTERASSE FORI Bolt patterns	Ø FORI Holes	CAMPANATURA Total height
DKS007	310	94	5,5	6	110	6,5	12,5

CROSS REFERENCE		
ACCOSSATO	BREMBO	BRAKING
DKS007	208973746	ND

DKS007					
MODELLO Model	CC	DA From	A To	ANT. Front	POST. Rear
HONDA					
CBR-RR	600	2003	→	X	
CBR-RR-ABS	600	2009	2012	X	
CB-R	1000	2008	→	X	
CB-R-ABS	1000	2009	→	X	
CBR-RR	1000	2004	2005	X	

DKS
DKS008

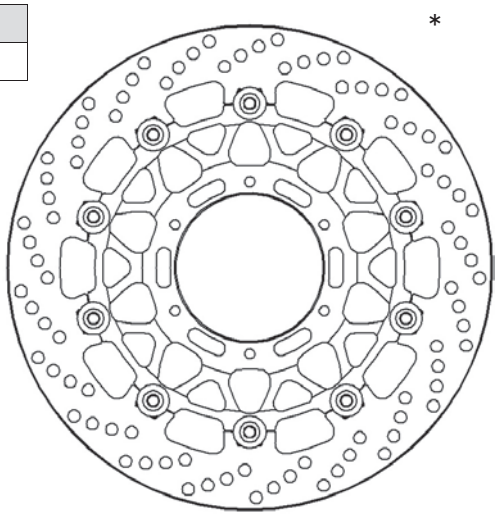

* **l'immagine del prodotto è puramente indicativa**
picture for illustrative purposes only

COLORI FASCIA FRENANTE / braking strip colours		
NERO	black	N

CODICE Reference	Ø ESTERNO Outer	Ø INTERNO Inner	SPESSORE Thickness	NR FORI No. holes	INTERASSE FORI Bolt patterns	Ø FORI Holes	CAMPANATURA Total height
DKS008	320	94	5,5	6	110	6,5	12,75

CROSS REFERENCE		
ACCOSSATO	BREMBO	BRAKING
DKS008	208973712	ND

DKS008					
MODELLO Model	CC	DA From	A To	ANT. Front	POST. Rear
HONDA					
CBR-RR	1000	2006	2007	X	
VTR-SP02	1000	2002	2004	X	
VTR-SP1	1000	2000	2001	X	

dischi freno brake rotor

APPLICAZIONI PER CODICE DISCO / applications for rotor code

DKS
DKS009

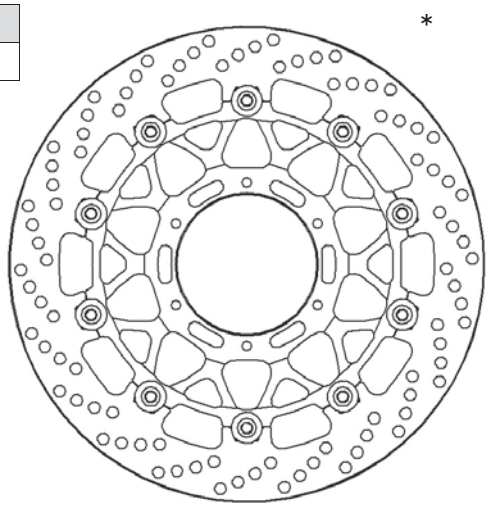

* **l'immagine del prodotto è puramente indicativa**
picture for illustrative purposes only

COLORI FASCIA FRENANTE / braking strip colours		
NERO	black	N
ROSSO	red	R

CODICE Reference	Ø ESTERNO Outer	Ø INTERNO Inner	SPESSORE Thickness	NR FORI No. holes	INTERASSE FORI Bolt patterns	Ø FORI Holes	CAMPANATURA Total height
DKS009	330	72	5,5	5	90	8,5	14,5

CROSS REFERENCE		
ACCOSSATO	BREMBO	BRAKING
DKS009	208B85911	ND

DKS009					
MODELLO Model	CC	DA From	A To	ANT. Front	POST. Rear
DUCATI					
DESMOSEDICI-RR	1000	2008	→	X	
1098/R/S/TRICOLORE	1098	2007	→	X	
STREETFIGHTER	1098	2009	→	X	
STREETFIGHTER-S	1098	2009	→	X	
STREETFIGHTER S	1098	2013	→	X	
1098-BAYLISS	1198	2009	→	X	
1098-R	1198	2009	→	X	
1198	1198	2009	→	X	
1198-S	1198	2009	→	X	
1198-SP	1198	2011	→	X	
PANIGALE	1199	2012	→	X	
PANIGALE-R	1199	2013	→	X	
PANIGALE-S	1199	2012	→	X	
PANIGALE-S-ABS	1199	2012	→	X	
PANIGALE-S-TRICOLORE-ABS	1199	2012	→	X	
SUPERLEGGERA	1199	2014	→	X	

DKS
DKS010

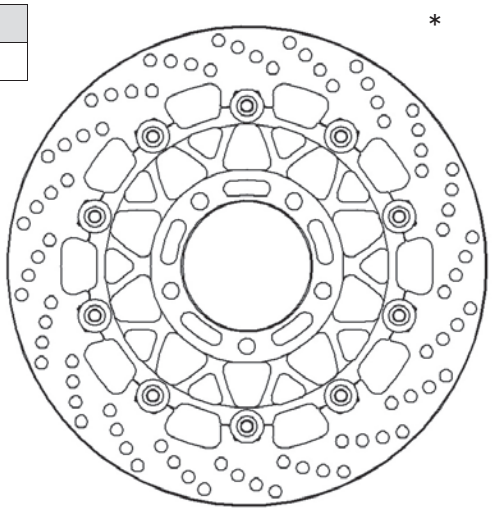

* **l'immagine del prodotto è puramente indicativa**
picture for illustrative purposes only

COLORI FASCIA FRENANTE / braking strip colours		
NERO	black	N
VERDE	green	G

CODICE Reference	Ø ESTERNO Outer	Ø INTERNO Inner	SPESSORE Thickness	NR FORI No. holes	INTERASSE FORI Bolt patterns	Ø FORI Holes	CAMPANATURA Total height
DKS010	300	80,5	5,5	5	100	10,5	0

CROSS REFERENCE		
ACCOSSATO	BREMBO	BRAKING
DKS010	208973714	ND

DKS010					
MODELLO Model	CC	DA From	A To	ANT. Front	POST. Rear
KAWASAKI					
ZX-6R	600	2007	2012	X	
ZX-6R	600	2013	→	X	
ZX-6RR	600	2005	2006	X	
ZX-6R	636	2005	2006	X	
Z-750-ABS	750	2007	→	X	
Z-750-R	750	2011	2012	X	
Z-750-R-ABS	750	2011	2012	X	
Z	1000	2007	→	X	
Z-SX	1000	2011	→	X	
Z-SX-ABS	1000	2011	→	X	
Z1000-ABS	1000	2007	→	X	
ZX-10-R	1000	2004	2010	X	

ACCOSSATO

dischi freno brake rotor

APPLICAZIONI PER CODICE DISCO / applications for rotor code

DKS
DKS011

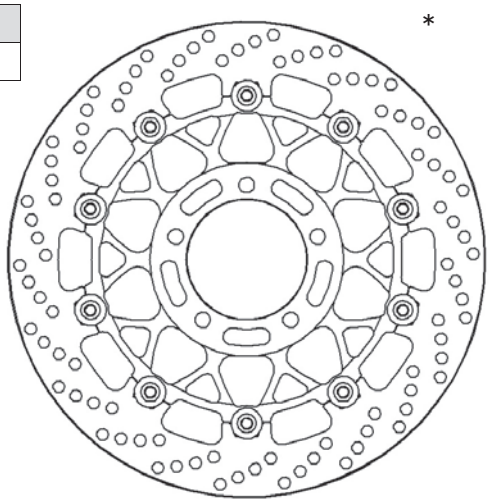

* **l'immagine del prodotto è puramente indicativa**
picture for illustrative purposes only

COLORI FASCIA FRENANTE / braking strip colours		
NERO	black	N
VERDE	green	G

CODICE Reference	Ø ESTERNO Outer	Ø INTERNO Inner	SPESSORE Thickness	NR FORI No. holes	INTERASSE FORI Bolt patterns	Ø FORI Holes	CAMPANATURA Total height
DKS011	310	80,5	5,5	5	100	10,5	0

CROSS REFERENCE		
ACCOSSATO	BREMBO	BRAKING
DKS011	208973734	ND

DKS011					
MODELLO Model	CC	DA From	A To	ANT. Front	POST. Rear
KAWASAKI					
ZX-6R-ABS	636	2013	→	X	
Z-800	800	2013	→	X	
Z-800-ABS	800	2013	→	X	
Z-800-E	800	2013	→	X	
ZX-10-R-(ABS)	1000	2011	→	X	
GTR	1400	2007	2011	X	
ZZR	1400	2006	→	X	
ZZR-ABS	1400	2006	→	X	

DKS
DKS013

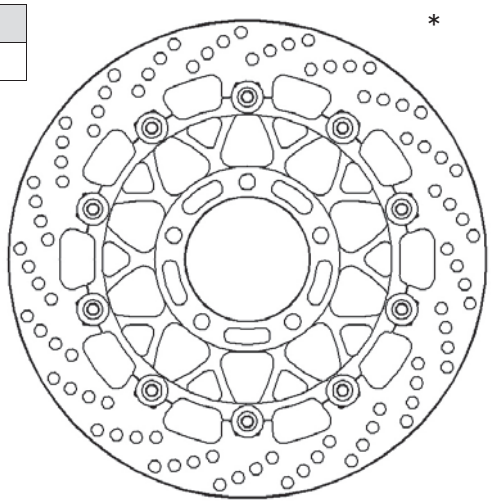

* **l'immagine del prodotto è puramente indicativa**
picture for illustrative purposes only

COLORI FASCIA FRENANTE / braking strip colours		
NERO	black	N

CODICE Reference	Ø ESTERNO Outer	Ø INTERNO Inner	SPESSORE Thickness	NR FORI No. holes	INTERASSE FORI Bolt patterns	Ø FORI Holes	CAMPANATURA Total height
DKS013	310	80	5,5	5	101,5	8,5	0

CROSS REFERENCE		
ACCOSSATO	BREMBO	BRAKING
DKS013	208973727	ND

DKS013					
MODELLO Model	CC	DA From	A To	ANT. Front	POST. Rear
MV AGUSTA					
BRUTALE-S	750	2001	2006	X	
F4-BIPOSTO-S	750	2000	2006	X	
F4-SENNA	750	1998	2006	X	
BRUTALE-S	910	2005	2008	X	
F4-S-MAMBA	1000	2004	2007	X	

dischi freno brake rotor

APPLICAZIONI PER CODICE DISCO / applications for rotor code

DKS
DKS014

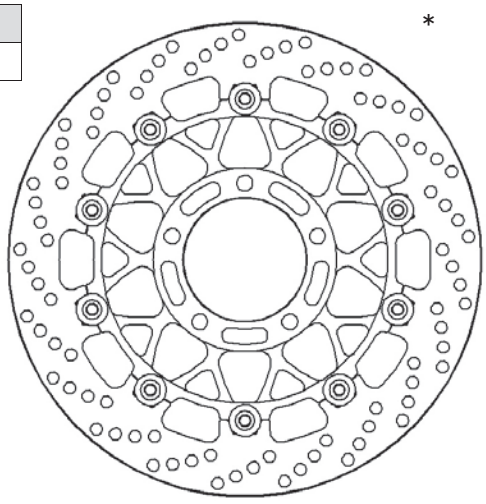

* **l'immagine del prodotto è puramente indicativa**
picture for illustrative purposes only

COLORI FASCIA FRENANTE / braking strip colours		
NERO	black	N
ROSSO	red	R

CODICE Reference	Ø ESTERNO Outer	Ø INTERNO Inner	SPESSORE Thickness	NR FORI No. holes	INTERASSE FORI Bolt patterns	Ø FORI Holes	CAMPANATURA Total height
DKS014	320	80	5,5	5	101,5	8,5	0

CROSS REFERENCE		
ACCOSSATO	BREMBO	BRAKING
DKS014	208973728	ND

DKS014					
MODELLO Model	CC	DA From	A To	ANT. Front	POST. Rear
MV AGUSTA					
BRUTALE	920	2012	→		
F4	1000	2013	→		
F4-R	1000	2006	2007		
F4-R	1000	2010	2013		
F4-RR	1000	2010	2013		
BRUTALE	1090	2013	→		
BRUTALE-CORSA	1090	2014	→		
BRUTALE-R	1090	2012	→		
BRUTALE-RR	1090	2012	→		

DKS
DKS015

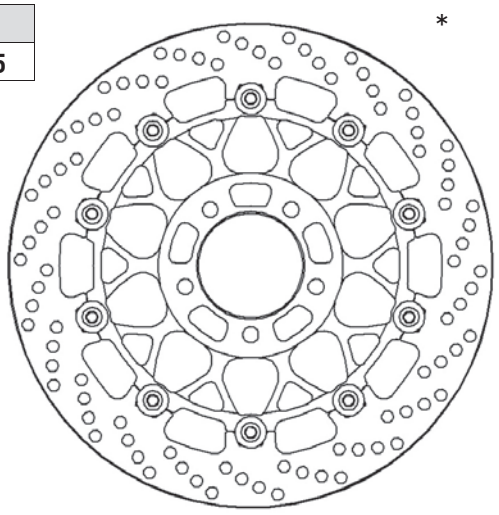

* **l'immagine del prodotto è puramente indicativa**
picture for illustrative purposes only

COLORI FASCIA FRENANTE / braking strip colours		
NERO	black	N

CODICE Reference	Ø ESTERNO Outer	Ø INTERNO Inner	SPESSORE Thickness	NR FORI No. holes	INTERASSE FORI Bolt patterns	Ø FORI Holes	CAMPANATURA Total height
DKS015	320	69	5,5	5	91	10,5	0

CROSS REFERENCE		
ACCOSSATO	BREMBO	BRAKING
DKS015	208973715	ND

DKS015					
MODELLO Model	CC	DA From	A To	ANT. Front	POST. Rear
SUZUKI					
GSX-R	600	1997	2003	X	
GSX-R	750	1996	2003	X	
GSX-R	1000	2001	2002	X	
TL-R	1000	1998	2003	X	
TL-S	1000	1997	2001	X	
GSX-R-HAYABUSA	1300	1999	2007	X	

ACCOSSATO

dischi freno brake rotor

APPLICAZIONI PER CODICE DISCO / applications for rotor code

DKS
DKS016

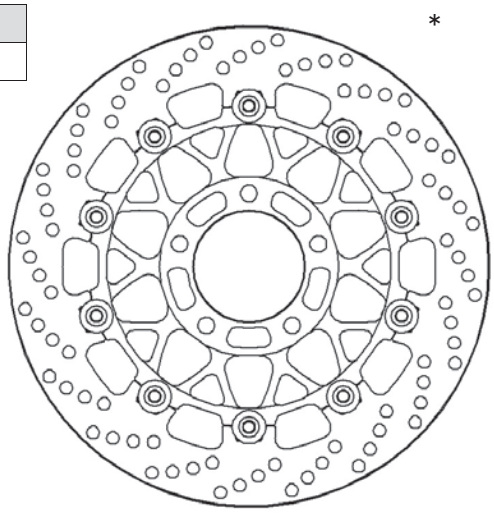

* **l'immagine del prodotto è puramente indicativa**
picture for illustrative purposes only

COLORI FASCIA FRENANTE / braking strip colours		
NERO	black	N

CODICE Reference	Ø ESTERNO Outer	Ø INTERNO Inner	SPESSORE Thickness	NR FORI No. holes	INTERASSE FORI Bolt patterns	Ø FORI Holes	CAMPANATURA Total height
DKS016	300	69	5,5	5	91	10,5	0

CROSS REFERENCE		
ACCOSSATO	BREMBO	BRAKING
DKS016	208973716	ND

DKS016					
MODELLO Model	CC	DA From	A To	ANT. Front	POST. Rear
SUZUKI					
GSX-R	600	2004	2005	X	
GSX-R	750	2004	2005	X	
GSX-R	1000	2003	2004	X	

DKS
DKS017

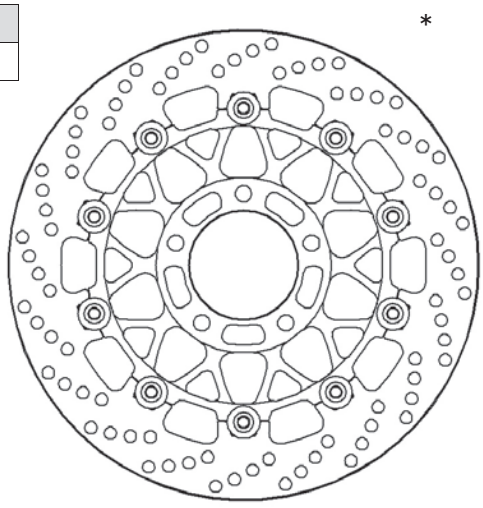

* **l'immagine del prodotto è puramente indicativa**
picture for illustrative purposes only

COLORI FASCIA FRENANTE / braking strip colours		
NERO	black	N

CODICE Reference	Ø ESTERNO Outer	Ø INTERNO Inner	SPESSORE Thickness	NR FORI No. holes	INTERASSE FORI Bolt patterns	Ø FORI Holes	CAMPANATURA Total height
DKS017	310	100	5,5	5	120	10,5	0

CROSS REFERENCE		
ACCOSSATO	BREMBO	BRAKING
DKS017	208973717	ND

DKS017					
MODELLO Model	CC	DA From	A To	ANT. Front	POST. Rear
SUZUKI					
GSX-R	600	2006	2007	X	
GSX-R	750	2006	2007	X	
GSX-R	1000	2005	2008	X	

dischi freno brake rotor

APPLICAZIONI PER CODICE DISCO / applications for rotor code

DKS
DKS018

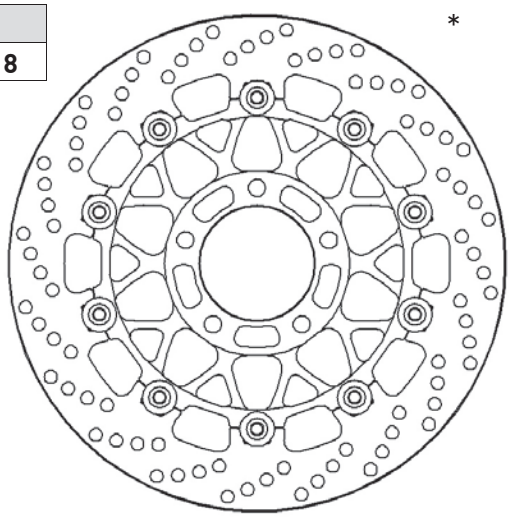

* **l'immagine del prodotto è puramente indicativa**
picture for illustrative purposes only

COLORI FASCIA FRENANTE / braking strip colours		
NERO	black	N

CODICE Reference	Ø ESTERNO Outer	Ø INTERNO Inner	SPESSORE Thickness	NR FORI No. holes	INTERASSE FORI Bolt patterns	Ø FORI Holes	CAMPANATURA Total height
DKS018	290	130	5	5	150	10,5	0

CROSS REFERENCE		
ACCOSSATO	BREMBO	BRAKING
DKS018	108973757	ND

DKS018					
MODELLO Model	CC	DA From	A To	ANT. Front	POST. Rear
KAWASAKI					
NINJA-ABS	300	2013	→	X	

DKS
DKS019

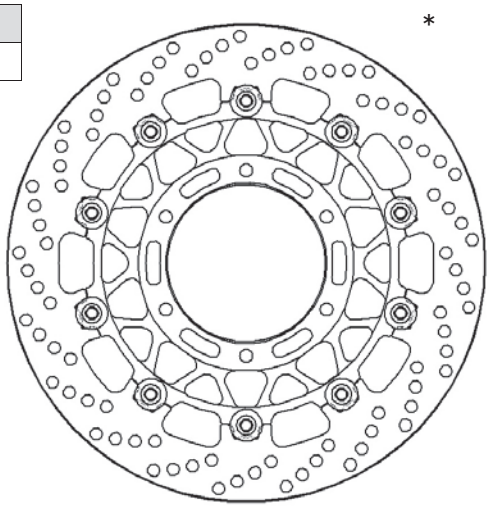

* **l'immagine del prodotto è puramente indicativa**
picture for illustrative purposes only

COLORI FASCIA FRENANTE / braking strip colours		
NERO	black	N

CODICE Reference	Ø ESTERNO Outer	Ø INTERNO Inner	SPESSORE Thickness	NR FORI No. holes	INTERASSE FORI Bolt patterns	Ø FORI Holes	CAMPANATURA Total height
DKS019	310	102	5,5	6	120	8,5	0

CROSS REFERENCE		
ACCOSSATO	BREMBO	BRAKING
DKS019	208973732	ND

DKS019					
MODELLO Model	CC	DA From	A To	ANT. Front	POST. Rear
SUZUKI					
GSX-R	600	2008	→	X	
GSX-R	750	2008	→	X	
GSX-R	1000	2009	2014	X	

ACCOSSATO

dischi freno brake rotor

APPLICAZIONI PER CODICE DISCO / applications for rotor code

DKS
DKS020

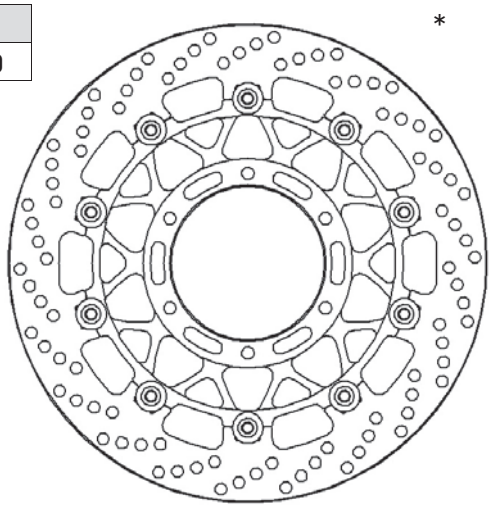

* **l'immagine del prodotto è puramente indicativa**
picture for illustrative purposes only

COLORI FASCIA FRENANTE / braking strip colours		
NERO	black	**N**
ROSSO	red	**R**

CODICE Reference	**Ø ESTERNO** Outer	**Ø INTERNO** Inner	**SPESSORE** Thickness	**NR FORI** No. holes	**INTERASSE FORI** Bolt patterns	**Ø FORI** Holes	**CAMPANATURA** Total height
DKS020	**320**	**80**	**5**	**5**	**101,5**	**8,5**	**0**

CROSS REFERENCE		
ACCOSSATO	**BREMBO**	**BRAKING**
DKS020	**208973747**	**ND**

DKS020					
MODELLO Model	**CC**	**DA** From	**A** To	**ANT.** Front	**POST.** Rear
MV AGUSTA					
BRUTALE	**675**	**2013**	→	**X**	
F3	**675**	**2011**	→	**X**	
BRUTALE	**800**	**2013**	→	**X**	
BRUTALE-RR	**800**	**2015**	→	**X**	
RIVALE	**800**	**2013**	→	**X**	
TURISMO-VELOCE	**800**	**2014**	→	**X**	
TURISMO-VELOCE-LUSSO	**800**	**2014**	→	**X**	

DKS
DKS021

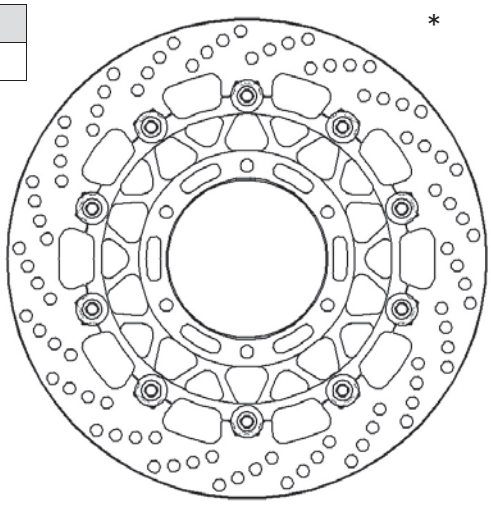

* **l'immagine del prodotto è puramente indicativa**
picture for illustrative purposes only

COLORI FASCIA FRENANTE / braking strip colours		
NERO	black	**N**

CODICE Reference	**Ø ESTERNO** Outer	**Ø INTERNO** Inner	**SPESSORE** Thickness	**NR FORI** No. holes	**INTERASSE FORI** Bolt patterns	**Ø FORI** Holes	**CAMPANATURA** Total height
DKS021	**310**	**121,5**	**5,5**	**5**	**142**	**10,5**	**0**

CROSS REFERENCE		
ACCOSSATO	**BREMBO**	**BRAKING**
DKS021	**208973735**	**ND**

DKS021					
MODELLO Model	**CC**	**DA** From	**A** To	**ANT.** Front	**POST.** Rear
SUZUKI					
GSR	**600**	**2006**	**2010**	**X**	
GSR	**750**	**2011**	**2014**	**X**	
B-KING	**1300**	**2008**	**2010**	**X**	
GSX-R-HAYABUSA	**1300**	**2008**	→	**X**	

dischi freno brake rotor

APPLICAZIONI PER CODICE DISCO / applications for rotor code

DKS
DKS022

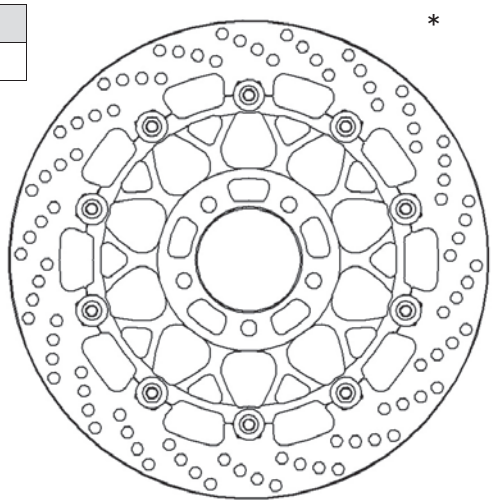

* **l'immagine del prodotto è puramente indicativa**
picture for illustrative purposes only

COLORI FASCIA FRENANTE / braking strip colours		
NERO	black	N

CODICE Reference	Ø ESTERNO Outer	Ø INTERNO Inner	SPESSORE Thickness	NR FORI No. holes	INTERASSE FORI Bolt patterns	Ø FORI Holes	CAMPANATURA Total height
DKS022	320	78	5,5	5	100,5	10,5	0

CROSS REFERENCE		
ACCOSSATO	BREMBO	BRAKING
DKS022	208973723	ND

DKS022					
MODELLO Model	CC	DA From	A To	ANT. Front	POST. Rear
TRIUMPH					
SPEED TRIPLE S	1050	2005	2007	X	
TIGER	1050	2007	2011	X	

DKS
DKS023

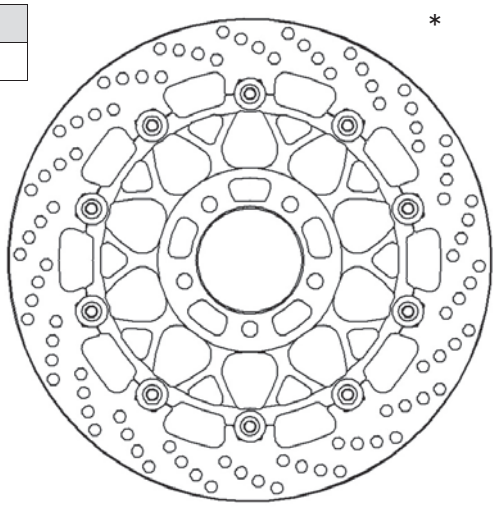

* **l'immagine del prodotto è puramente indicativa**
picture for illustrative purposes only

COLORI FASCIA FRENANTE / braking strip colours		
NERO	black	N

CODICE Reference	Ø ESTERNO Outer	Ø INTERNO Inner	SPESSORE Thickness	NR FORI No. holes	INTERASSE FORI Bolt patterns	Ø FORI Holes	CAMPANATURA Total height
DKS023	310	82	4,5	5	100,5	10,5	0

CROSS REFERENCE		
ACCOSSATO	BREMBO	BRAKING
DKS023	208973759	ND

DKS023					
MODELLO Model	CC	DA From	A To	ANT. Front	POST. Rear
TRIUMPH					
DAYTONA	675	2013	→	X	
DAYTONA-R	675	2013	→	X	

ACCOSSATO

dischi freno brake rotor

APPLICAZIONI PER CODICE DISCO / applications for rotor code

DKS
DKS024

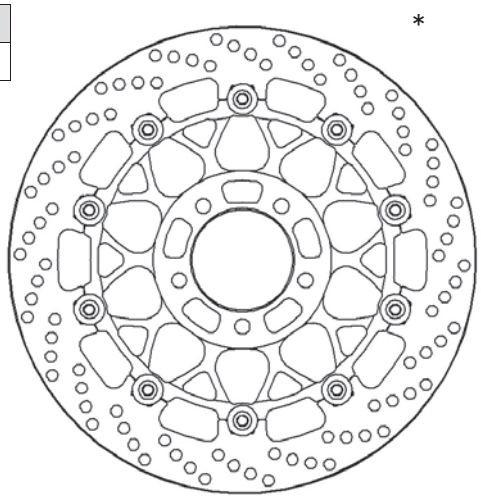

* **l'immagine del prodotto è puramente indicativa**
picture for illustrative purposes only

COLORI FASCIA FRENANTE / braking strip colours		
NERO	black	N

CODICE Reference	Ø ESTERNO Outer	Ø INTERNO Inner	SPESSORE Thickness	NR FORI No. holes	INTERASSE FORI Bolt patterns	Ø FORI Holes	CAMPANATURA Total height
DKS024	310	84,5	5,5	5	100,5	10,5	0

CROSS REFERENCE		
ACCOSSATO	BREMBO	BRAKING
DKS024	208973730	ND

DKS024					
MODELLO Model	CC	DA From	A To	ANT. Front	POST. Rear
TRIUMPH					
DAYTONA	675	2006	2012	X	
SPEED TRIPLE	675	2007	2009	X	
STREET-TRIPLE	675	2007	2012	X	
STREET-TRIPLE-R	675	2007	2012	X	

DKS
DKS025

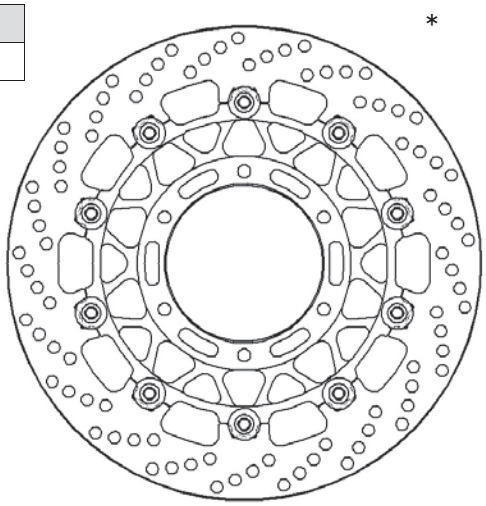

* **l'immagine del prodotto è puramente indicativa**
picture for illustrative purposes only

COLORI FASCIA FRENANTE / braking strip colours		
NERO	black	N

CODICE Reference	Ø ESTERNO Outer	Ø INTERNO Inner	SPESSORE Thickness	NR FORI No. holes	INTERASSE FORI Bolt patterns	Ø FORI Holes	CAMPANATURA Total height
DKS025	300	132	5,5	6	150	8,5	0

CROSS REFERENCE		
ACCOSSATO	BREMBO	BRAKING
DKS025	208973718	ND

DKS025					
MODELLO Model	CC	DA From	A To	ANT. Front	POST. Rear
YAMAHA					
YZF-R-THUNDER-CAT	600	1996	2004	X	
YZF-R6	600	1999	2002	X	
YZF-R1	1000	1998	2001	X	
YZF-R1	1000	2002	2003	X	
YZF-THUNDER-ACE	1000	1996	1998	X	

dischi freno brake rotor

APPLICAZIONI PER CODICE DISCO / applications for rotor code

DKS
DKS026

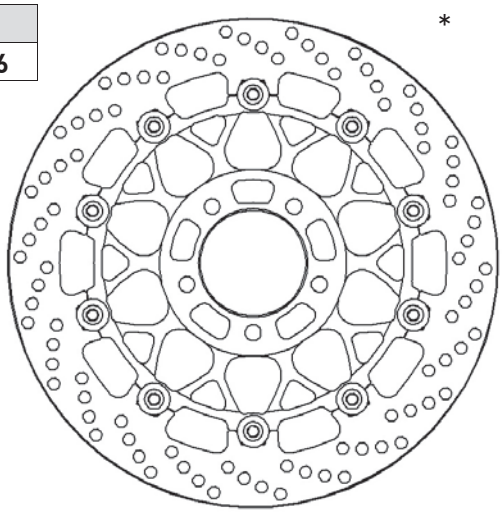

* **l'immagine del prodotto è puramente indicativa**
picture for illustrative purposes only

COLORI FASCIA FRENANTE / braking strip colours		
NERO	black	N

CODICE Reference	Ø ESTERNO Outer	Ø INTERNO Inner	SPESSORE Thickness	NR FORI No. holes	INTERASSE FORI Bolt patterns	Ø FORI Holes	CAMPANATURA Total height
DKS026	300	132	5,5	5	150	8,5	0

CROSS REFERENCE		
ACCOSSATO	BREMBO	BRAKING
DKS026	208973719	ND

DKS026					
MODELLO Model	CC	DA From	A To	ANT. Front	POST. Rear
YAMAHA					
FZ6-FAZER	600	2004	2008	X	
FZ6-FAZER-S2	600	2007	2008	X	
YZF-R6	600	2003	2004	X	
MT-03	660	2006	2011	X	

DKS
DKS027

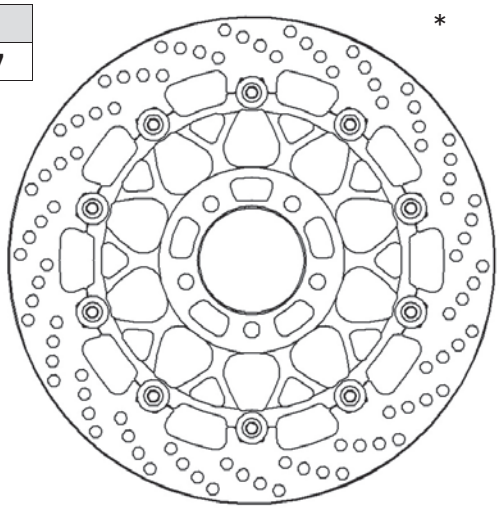

* **l'immagine del prodotto è puramente indicativa**
picture for illustrative purposes only

COLORI FASCIA FRENANTE / braking strip colours		
NERO	black	N

CODICE Reference	Ø ESTERNO Outer	Ø INTERNO Inner	SPESSORE Thickness	NR FORI No. holes	INTERASSE FORI Bolt patterns	Ø FORI Holes	CAMPANATURA Total height
DKS027	310	82,3	5	5	100,5	10,5	0

CROSS REFERENCE		
ACCOSSATO	BREMBO	BRAKING
DKS027	208973756	ND

DKS027					
MODELLO Model	CC	DA From	A To	ANT. Front	POST. Rear
TRIUMPH					
STREET-TRIPLE	675	2013	→	X	
STREET-TRIPLE-R	675	2013	→	X	

ACCOSSATO

dischi freno brake rotor

APPLICAZIONI PER CODICE DISCO / applications for rotor code

DKS
DKS028

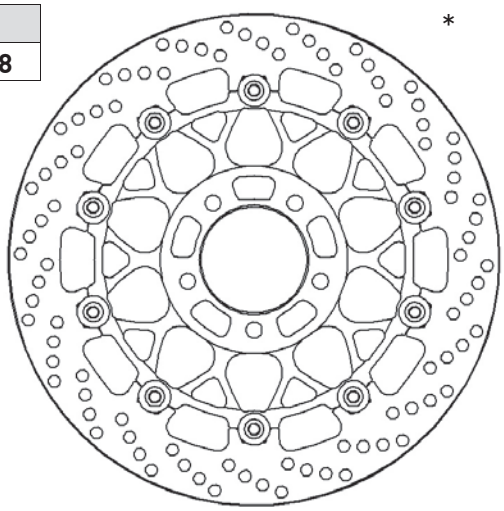

* **l'immagine del prodotto è puramente indicativa**
picture for illustrative purposes only

COLORI FASCIA FRENANTE / braking strip colours		
NERO	black	N

CODICE Reference	Ø ESTERNO Outer	Ø INTERNO Inner	SPESSORE Thickness	NR FORI No. holes	INTERASSE FORI Bolt patterns	Ø FORI Holes	CAMPANATURA Total height
DKS028	310	132	5,5	5	150	8,5	0

CROSS REFERENCE		
ACCOSSATO	BREMBO	BRAKING
DKS028	208973720	ND

DKS028					
MODELLO Model	CC	DA From	A To	ANT. Front	POST. Rear
YAMAHA					
YZF-R6	600	2005	→	X	
FZ-8	800	2010	2013	X	
FZS-FAZER	800	2010	2012	X	
YZF-R1	1000	2007	2014	X	

DKS
DKS029

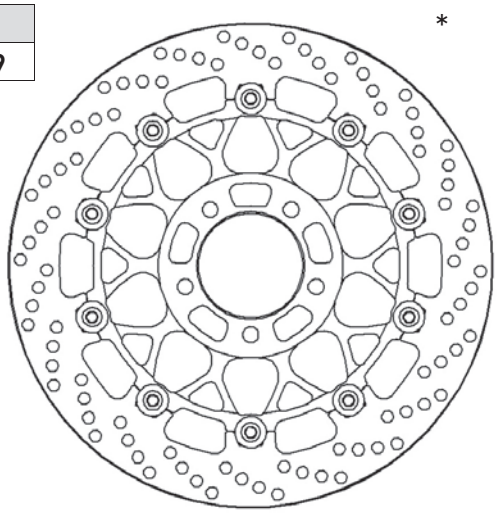

* **l'immagine del prodotto è puramente indicativa**
picture for illustrative purposes only

COLORI FASCIA FRENANTE / braking strip colours		
NERO	black	N

CODICE Reference	Ø ESTERNO Outer	Ø INTERNO Inner	SPESSORE Thickness	NR FORI No. holes	INTERASSE FORI Bolt patterns	Ø FORI Holes	CAMPANATURA Total height
DKS029	320	132	5,5	5	150	8,5	0

CROSS REFERENCE		
ACCOSSATO	BREMBO	BRAKING
DKS029	208973721	ND

DKS029					
MODELLO Model	CC	DA From	A To	ANT. Front	POST. Rear
YAMAHA					
FZ1	1000	2006	2011	X	
YZF-R1	1000	2004	2006	X	
FZ1-FAZER	1000	2006	2012	X	

dischi freno brake rotor

APPLICAZIONI PER CODICE DISCO / applications for rotor code

DKR
DKR001

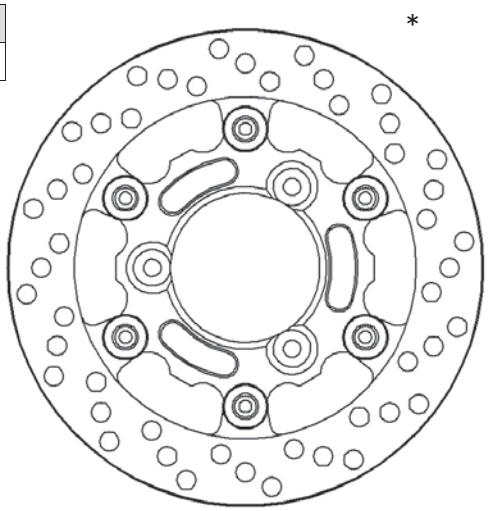

* **l'immagine del prodotto è puramente indicativa**
picture for illustrative purposes only

CODICE Reference	Ø ESTERNO Outer	Ø INTERNO Inner	SPESSORE Thickness	NR FORI No. holes	INTERASSE FORI Bolt patterns	Ø FORI Holes	CAMPANATURA Total height
DKR001	220	69	4,5	3	86	8,2	10,25

DKR001					
MODELLO Model	CC	DA From	A To	ANT. Front	POST. Rear
DISCO PER MOTO 2					X

DKR
DKR002

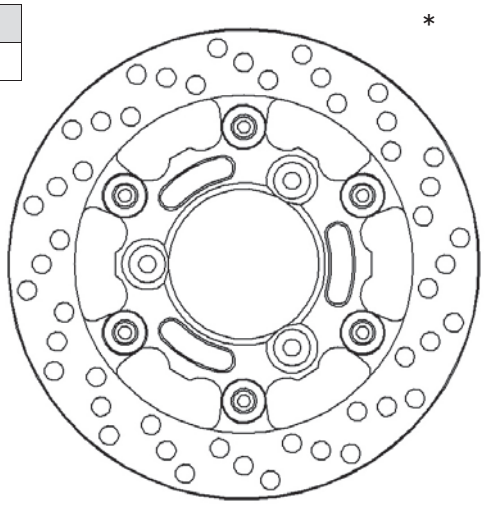

* **l'immagine del prodotto è puramente indicativa**
picture for illustrative purposes only

CODICE Reference	Ø ESTERNO Outer	Ø INTERNO Inner	SPESSORE Thickness	NR FORI No. holes	INTERASSE FORI Bolt patterns	Ø FORI Holes	CAMPANATURA Total height
DKR002	220	70	4,5	3	90	8,1	10,25

DKR002					
MODELLO Model	CC	DA From	A To	ANT. Front	POST. Rear
DISCO PER MOTO 2					X

ACCOSSATO

dischi freno brake rotor

APPLICAZIONI PER CODICE DISCO / applications for rotor code

DKR
DKR003

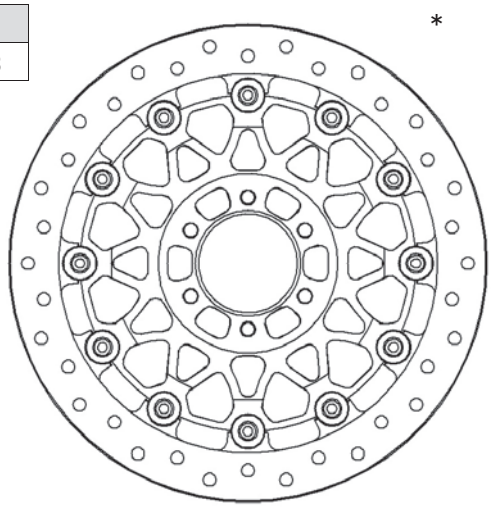

*

DKR
DKR004

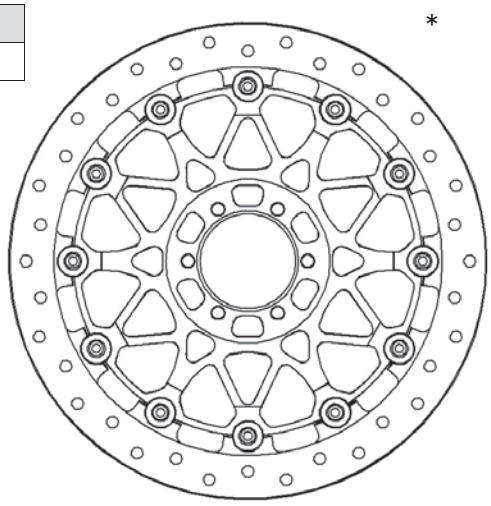

*

*** l'immagine del prodotto è puramente indicativa**
picture for illustrative purposes only

CODICE Reference	Ø ESTERNO Outer	Ø INTERNO Inner	SPESSORE Thickness	NR FORI No. holes	INTERASSE FORI Bolt patterns	Ø FORI Holes	CAMPANATURA Total height
DKR003	290	60	6	6	80	8,3	13

DKR003					
MODELLO Model	CC	DA From	A To	ANT. Front	POST. Rear
DISCO PER MOTO 2				X	

*** l'immagine del prodotto è puramente indicativa**
picture for illustrative purposes only

CODICE Reference	Ø ESTERNO Outer	Ø INTERNO Inner	SPESSORE Thickness	NR FORI No. holes	INTERASSE FORI Bolt patterns	Ø FORI Holes	CAMPANATURA Total height
DKR004	320	64	6	6	80	8,5	10,5

DKR004					
MODELLO Model	CC	DA From	A To	ANT. Front	POST. Rear
APRILIA					
RSV (ALL VERSIONE)	1000			X	
RSV4	1000			X	
DUCATI					
748	748			X	
916	916			X	
996	996			X	
998	998			X	

dischi freno brake rotor

APPLICAZIONI PER CODICE DISCO / applications for rotor code

DKR
DKR005

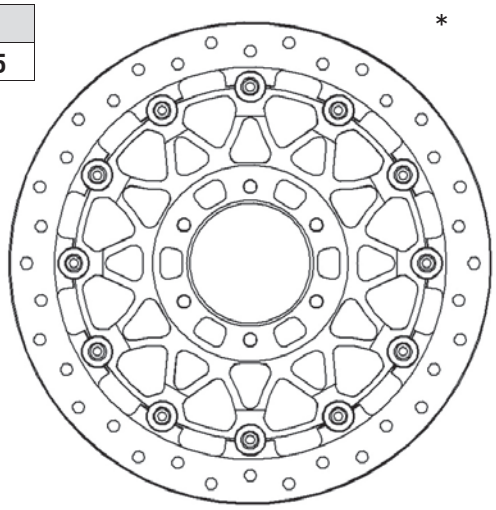

* **l'immagine del prodotto è puramente indicativa**
picture for illustrative purposes only

CODICE Reference	Ø ESTERNO Outer	Ø INTERNO Inner	SPESSORE Thickness	NR FORI No. holes	INTERASSE FORI Bolt patterns	Ø FORI Holes	CAMPANATURA Total height
DKR005	320	80	6	6	101,5	8,5	10,5

DKR
DKR006

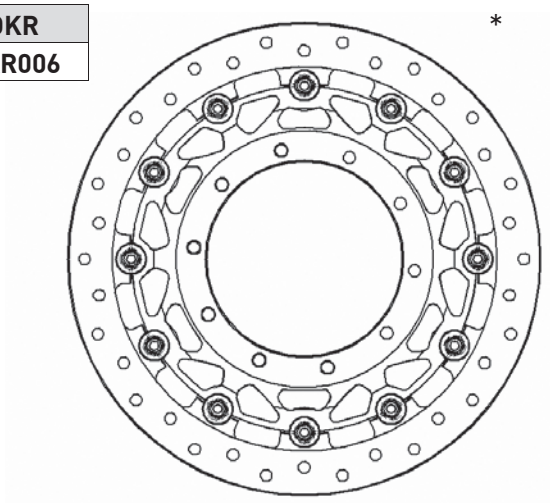

* **l'immagine del prodotto è puramente indicativa**
picture for illustrative purposes only

CODICE Reference	Ø ESTERNO Outer	Ø INTERNO Inner	SPESSORE Thickness	NR FORI No. holes	INTERASSE FORI Bolt patterns	Ø FORI Holes	CAMPANATURA Total height
DKR006	320	69	6	10	91	10	3,4

DKR
DKR007

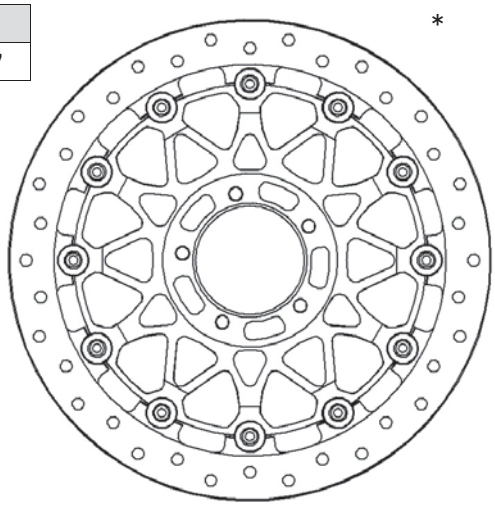

* **l'immagine del prodotto è puramente indicativa**
picture for illustrative purposes only

CODICE Reference	Ø ESTERNO Outer	Ø INTERNO Inner	SPESSORE Thickness	NR FORI No. holes	INTERASSE FORI Bolt patterns	Ø FORI Holes	CAMPANATURA Total height
DKR007	320	72	6	5	90	8,5	10,5

DKR007					
MODELLO Model	CC	DA From	A To	ANT. Front	POST. Rear
DUCATI					
999 RS	999			X	
1098/1198 RS				X	

DKR
DKR008

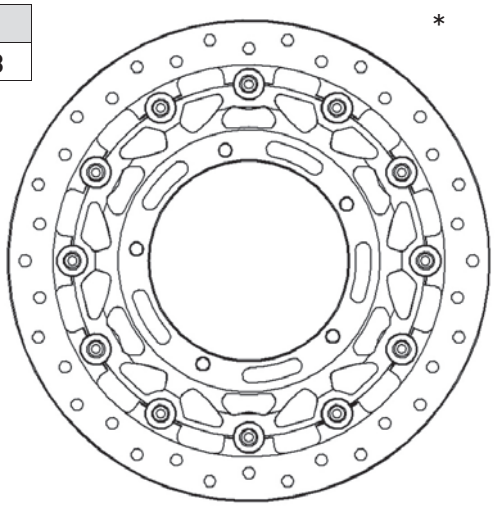

* **l'immagine del prodotto è puramente indicativa**
picture for illustrative purposes only

CODICE Reference	Ø ESTERNO Outer	Ø INTERNO Inner	SPESSORE Thickness	NR FORI No. holes	INTERASSE FORI Bolt patterns	Ø FORI Holes	CAMPANATURA Total height
DKR008	320	132	6	5	150	8,5	0

DKR008					
MODELLO Model	CC	DA From	A To	ANT. Front	POST. Rear
YAMAHA					
R6	600	2005		X	
	DISCO ORIGINALE DIAM. 310/320mm Original disc diam. 310/320mm				
YZF-R1	1000	2004		X	
	DISCO ORIGINALE DIAM. 310/320mm Original disc diam. 310/320mm				

ACCOSSATO

dischi freno brake rotor

APPLICAZIONI PER CODICE DISCO / applications for rotor code

DKR
DKR009

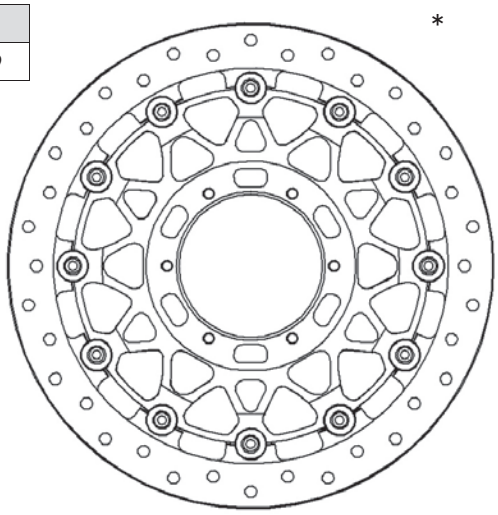

*

DKR
DKR010

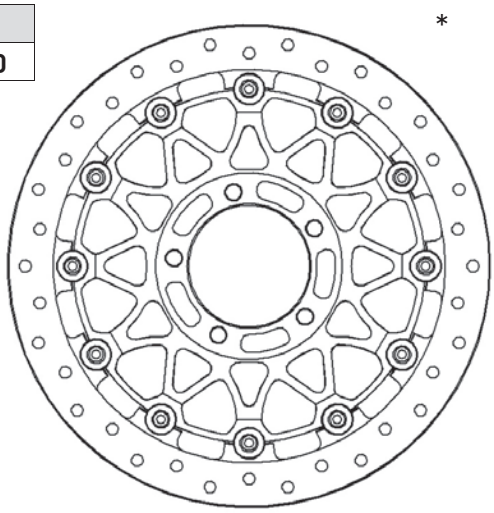

*

*** l'immagine del prodotto è puramente indicativa**
picture for illustrative purposes only

CODICE Reference	Ø ESTERNO Outer	Ø INTERNO Inner	SPESSORE Thickness	NR FORI No. holes	INTERASSE FORI Bolt patterns	Ø FORI Holes	CAMPANATURA Total height
DKR009	320	94	6	6	110	6,25	15,75

DKR009					
MODELLO Model	CC	DA From	A To	ANT. Front	POST. Rear
HONDA					
CBR RR	1000	2008		X	
1098/1198 RS		X			

*** l'immagine del prodotto è puramente indicativa**
picture for illustrative purposes only

CODICE Reference	Ø ESTERNO Outer	Ø INTERNO Inner	SPESSORE Thickness	NR FORI No. holes	INTERASSE FORI Bolt patterns	Ø FORI Holes	CAMPANATURA Total height
DKR010	320	80,5	6	5	100	10,5	0

DKR010					
MODELLO Model	CC	DA From	A To	ANT. Front	POST. Rear
KAWASAKI					
ZX-10-R	1000	2004	2010	X	
ZX-6R	636	2005	2006	X	
ZX-6-RR	636	2003	2006	X	

dischi freno brake rotor

APPLICAZIONI PER CODICE DISCO / applications for rotor code

DKR
DKR012

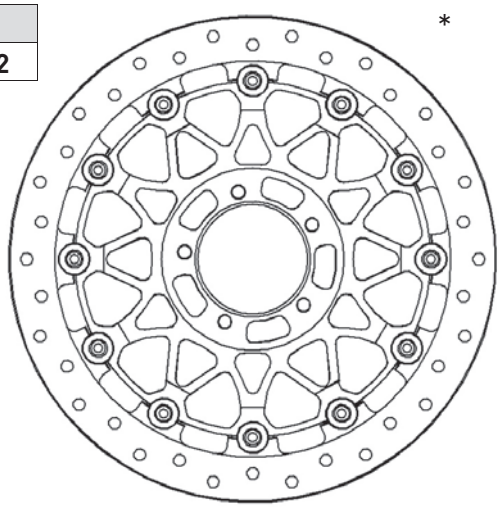

*

DKR
DKR013

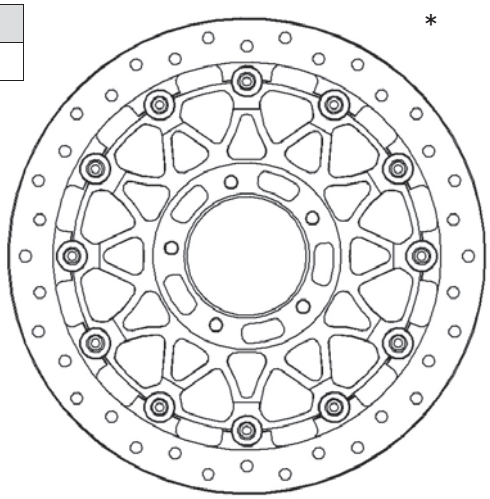

*

*** l'immagine del prodotto è puramente indicativa**
picture for illustrative purposes only

CODICE Reference	Ø ESTERNO Outer	Ø INTERNO Inner	SPESSORE Thickness	NR FORI No. holes	INTERASSE FORI Bolt patterns	Ø FORI Holes	CAMPANATURA Total height
DKR012	320	72	6	5	90	8,5	18,75

DKR012					
MODELLO Model	CC	DA From	A To	ANT. Front	POST. Rear
DUCATI					
PANIGALE RS	1199			X	

*** l'immagine del prodotto è puramente indicativa**
picture for illustrative purposes only

CODICE Reference	Ø ESTERNO Outer	Ø INTERNO Inner	SPESSORE Thickness	NR FORI No. holes	INTERASSE FORI Bolt patterns	Ø FORI Holes	CAMPANATURA Total height
DKR013	320	80	6	5	101,5	8,5	10,5

DKR013					
MODELLO Model	CC	DA From	A To	ANT. Front	POST. Rear
MV AGUSTA					
BRUTALE	750			X	
F4	750			X	
BRUTALE	910			X	
F4	1000			X	

ACCOSSATO

dischi freno brake rotor

APPLICAZIONI PER CODICE DISCO / applications for rotor code

DKR
DKR014

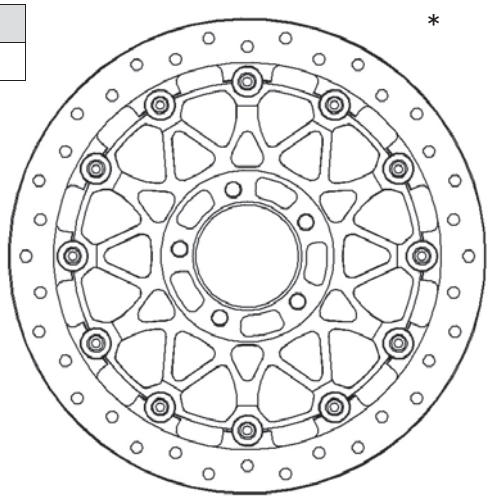

* **l'immagine del prodotto è puramente indicativa**
picture for illustrative purposes only

CODICE Reference	Ø ESTERNO Outer	Ø INTERNO Inner	SPESSORE Thickness	NR FORI No. holes	INTERASSE FORI Bolt patterns	Ø FORI Holes	CAMPANATURA Total height
DKR014	320	69	6	5	91	10,2	0

DKR014					
MODELLO Model	CC	DA From	A To	ANT. Front	POST. Rear
SUZUKI					
GSX 600 R	600	1997	2003	X	
	DISCO ORIGINALE DIAMETRO 320 mm original disc diam 320 mm				
GSX 600 R	600	2004	2005	X	
	DISCO ORIGINALE DIAMETRO 320 mm original disc diam 320 mm				
GSX 750 R	750	1996	2003	X	
	DISCO ORIGINALE DIAMETRO 320 mm original disc diam 320 mm				
GSX 750 R	750	2004	2005	X	
	DISCO ORIGINALE DIAMETRO 320 mm original disc diam 320 mm				
GSX 1000 R	1000	2001	2002	X	
	DISCO ORIGINALE DIAMETRO 320 mm original disc diam 320 mm				
GSX 1000 R	1000	2003	2004	X	
	DISCO ORIGINALE DIAMETRO 320 mm original disc diam 320 mm				

DKR
DKR015

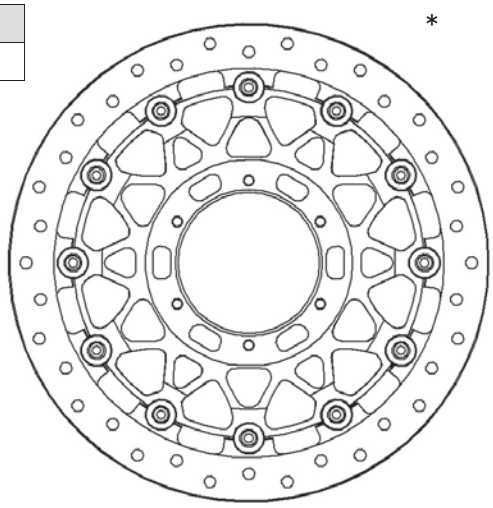

* **l'immagine del prodotto è puramente indicativa**
picture for illustrative purposes only

CODICE Reference	Ø ESTERNO Outer	Ø INTERNO Inner	SPESSORE Thickness	NR FORI No. holes	INTERASSE FORI Bolt patterns	Ø FORI Holes	CAMPANATURA Total height
DKR015	320	102	6	6	120	8,5	0

DKR015					
MODELLO Model	CC	DA From	A To	ANT. Front	POST. Rear
SUZUKI					
GSX R	1000	2009		x	
	DISCO ORIGINALE DIAMETRO 320 mm original disc diam 320 mm				

DKR
DKR016

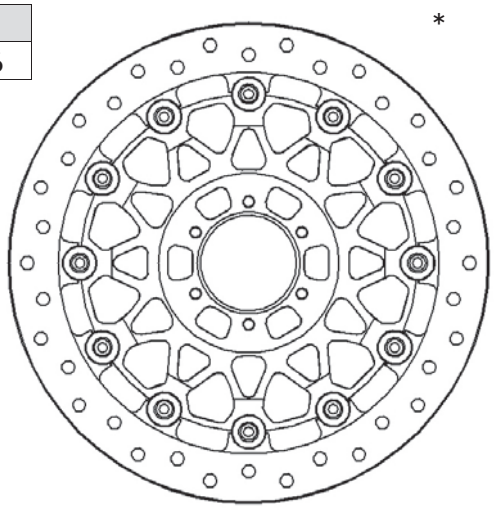

* **l'immagine del prodotto è puramente indicativa**
picture for illustrative purposes only

CODICE Reference	Ø ESTERNO Outer	Ø INTERNO Inner	SPESSORE Thickness	NR FORI No. holes	INTERASSE FORI Bolt patterns	Ø FORI Holes	CAMPANATURA Total height
DKR016	290	58	5,5	6	74	6,25	17


13 GIUGNO 2015
SUPERBIKE
SUZUKI
AUTOMOBILI
SAN CARLO
VERTEX
PISTON POWER
Bindini
35 70.it
@CIV.tv
#madeinCIV
www.civ.tv
BRAKING
SUNSTAR
DAINESE
MICHELIN
barni
RACING TEAM
DUCATI
SBK
51
VIRCOS

ACCOSSATO

INDICE LEVE
levers index

CROSSREFERENCE CODICI OEM
Oem crossreference: **732 - 734**

ANALITICO LEVE
levers application list: **735 - 800**

IMMAGINI LEVE
lever images: **801 - 811**

FRENO
blake AGD: **801 - 805**

FRIZIONE
clutch AGS: **806 - 810**

FRENO e FRIZIONE
brake & clutch AGDS: **811**

LEVE / levers

CROSSREFERENCE CON CODICI OEM / Oem codes crossreference

MARCA Brand	CODICE OEM OEM Code	CODICE ACCOSSATO Accossato Code
APRILIA	8218273	AGD39
APRILIA	8113342	AGD45
APRILIA	AP9100787	AGD93
APRILIA	8213422	AGD97
APRILIA	8118460	AGD102
APRILIA	8213402	AGD103
APRILIA	851366	AGD175
APRILIA	8118416	AGD181
APRILIA	8118473	AGD183
APRILIA	8218189	AGD184
APRILIA	8218074	AGD189
APRILIA	8218311	AGD190
APRILIA	8218172	AGD191
APRILIA	8218279	AGD192
APRILIA	00H00907201	AGD215
APRILIA	890308	AGD226
APRILIA	856144	AGD301
APRILIA	8218326	AGS02
APRILIA	8218495	AGS05
APRILIA	8218274	AGS43
APRILIA	8218153	AGS44
APRILIA	00H00904291	AGS45
APRILIA	8218329	AGS63
APRILIA	8118461	AGS65
APRILIA	8218076	AGS81
APRILIA	8218462	AGS87
APRILIA	8213398	AGS93
APRILIA	856054	AGS16
APRILIA	8118727	AGS217
APRILIA	8213284	AGDS602
APRILIA	8213279	AGDS604
APRILIA	8213239	AGDS606
APRILIA	8218480	AGDS607
APRILIA	8133809	AGDS609
APRILIA	8218549	AGDS614
APRILIA	8118542	AGDS618
APRILIA	8118641	AGDS619
BETA	2127090000	AGD40
BETA	2102099000	AGD74
BETA	26270609000	AGD161
BETA	2127101000	AGD174
BETA	2125520000	AGS64
BETA	2125531000	AGS66
BETA	2127085000	AGS170
BETA	2127081000	AGS171
BETA	2127105000	AGDS622
BMW	71607654754	AGD06
BMW	32722332896	AGD07
BMW	32727721294	AGD08
BMW	32727717295	AGD10
BMW	32728524958	AGD11
BMW	32727707963	AGD199
BMW	32727655208	AGD200
BMW	32727717295	AGD219
BMW	32727691636	AGD305
BMW	32727691942	AGD306
BMW	21522335806	AGS12
BMW	71607654753	AGS13
BMW	32727688439	AGS204
BMW	32727710795	AGS293

MARCA Brand	CODICE OEM OEM Code	CODICE ACCOSSATO Accossato Code
BMW	32727691943	AGS298
BMW	32727692368	AGS299
BMW	32727705606	AGS299
BUELL	N120202A8	AGD01
BUELL	N12021AJ	AGD56
BUELL	N11021AJ	AGS46
CAGIVA	00H00901201	AGD75
CAGIVA	800052662	AGD182
CAGIVA	800077940	AGS233
CPI	45022-BMBT-003	AGD229
CPI	45022-BMBT-002	AGD230
CPI	D06-62260-10	AGD241
CPI	40002-BMBT-003	AGS221
CPI	D06-62253-10-00	AGS231
CPI	40002-BMBT-001	AGDS620
DAELIM	53178-SA3-RB00	AGD203
DAELIM	53175-BA6-0100	AGD217
DAELIM	53175-SZ1-0000	AGD237
DAELIM	53175CB40000M1	AGD238
DAELIM	53178-SA1-0110	AGS61
DAELIM	53178-BA5-9000	AGS209
DAELIM	53178-SZ1-0100	AGS226
DAELIM	53178-BA7-9500	AGS266
DAELIM	53175SC10000M4	AGS267
DERBI	00H00906203	AGD37
DERBI	00F00910201	AGD100
DERBI	00H00908201	AGD288
DERBI	00G00900291	AGS205
DERBI	8213602	AGDS608
DUCATI	63140331A	AGD209
DUCATI	62640581A	AGD301
DUCATI	63140341A	AGS200
DUCATI	62610031D	AGS224
DUCATI	62640711A	AGS282
DUCATI	62640551A	AGS289
DUCATI	62610021A	AGDS621
GAS GAS	BT27922045	AGD173
GAS GAS	2127093	AGD206
GAS GAS	E200701	AGS168
GAS GAS	BE45000023011	AGS17
GAS GAS	BT280222040	AGS192
GENERIC	40002BMBT000	AGS228
GENRIC	45022BMBT001	AGD242
GILERA	344917	AGD46
GILERA	646832	AGD115
GILERA	271450	AGS72
GILERA	497172	AGS129
GILERA	649166	AGS288
GILERA	600475	AGDS610
GILERA	646833	AGDS611
HARLEY DAVIDSON	46946-06A	AGD15
HARLEY DAVIDSON	45016-82T	AGD251
HARLEY DAVIDSON	46945-07A	AGS186
HARLEY DAVIDSON	45017-93	AGS236
HARLEY DAVIDSON	45017-82T	AGS237

MARCA Brand	CODICE OEM OEM Code	CODICE ACCOSSATO Accossato Code
HM	K01309077	AGD304
HM	53178-MEN-670	AGS11
HM	53178-MAC-740	AGS74
HM	K02095775	AGS30
HONDA	53170-MBW-006	AGD04
HONDA	53170-MEL-006	AGD05
HONDA	53170-MCF-006	AGD18
HONDA	53175-KM9-006	AGD51
HONDA	53175-MJ6-006	AGD52
HONDA	53175-KAE-730	AGD68
HONDA	53175-KJ1-730	AGD69
HONDA	53175-GBM-751	AGD70
HONDA	53170-KV0-006	AGD80
HONDA	53175-MM9-006	AGD85
HONDA	53175ML3790	AGD94
HONDA	53170-MN9-000	AGD99
HONDA	53175-MN1-650	AGD104
HONDA	53175-KAB-000	AGD105
HONDA	53175-MN9-670	AGD117
HONDA	5CH-H3922-00	AGD118
HONDA	53170-MAN-911	AGD119
HONDA	53170-MAT-006	AGD123
HONDA	53175-GR2-000	AGD127
HONDA	53170-MBR-J11	AGD130
HONDA	53185-KV0-006	AGD131
HONDA	53175-KS6-671	AGD132
HONDA	53175-GCS-006	AGD134
HONDA	53175-KBW-900	AGD144
HONDA	53175-MG3-640	AGD147
HONDA	53175-ML5-006	AGD150
HONDA	53175-GAV-700	AGD160
HONDA	53175-MAK-003	AGD176
HONDA	53175-MA6-006	AGD179
HONDA	53170-MEE-006	AGD205
HONDA	53170-MEJ-006	AGD207
HONDA	53175-HE0-000	AGD211
HONDA	53190-HP1-006	AGD212
HONDA	53175-KRP-980	AGD27
HONDA	53175-KET-921	AGD277
HONDA	53171-MEN-J01	AGD278
HONDA	53171-MEN-J01	AGD279
HONDA	53175-KPK-901	AGD280
HONDA	53175-KT0-840	AGD281
HONDA	53175-MAB-621	AGD282
HONDA	53170-MCS-G01	AGD285
HONDA	53175-HP6-A01	AGD291
HONDA	53178-MFG-D01	AGS07
HONDA	53180-MEJ-006	AGS08
HONDA	53178-KV0-670	AGS38
HONDA	53180-ML7-691	AGS62
HONDA	53178-KE1-000	AGS68
HONDA	53178-969-680	AGS70
HONDA	53178-GCM-900	AGS77
HONDA	53178-MAN-600	AGS78
HONDA	53178-GCG-930	AGS86
HONDA	53178-GN1-A00	AGS94
HONDA	53178-KFG-006	AGS95
HONDA	53178-KA3-840	AGS96
HONDA	53178-MCT-006	AGS111
HONDA	53178-KPB-006	AGS112

ACCOSSATO

LEVE / levers

CROSSREFERENCE CON CODICI OEM / Oem codes crossreference

MARCA Brand	CODICE OEM OEM Code	CODICE ACCOSSATO Accossato Code
HONDA	53175-GR2-010	AGS116
HONDA	53178-GR2-000	AGS119
HONDA	53178-GN2-930	AGS120
HONDA	53178-GS7-670	AGS121
HONDA	53178-MF8-000	AGS122
HONDA	53178-KY4-880	AGS123
HONDA	53178-KV3-000	AGS124
HONDA	53178-KG1-920	AGS141
HONDA	53178-MAH-000	AGS143
HONDA	53178-KE8-006	AGS144
HONDA	53180-MZ1-792	AGS146
HONDA	46092-1024	AGS149
HONDA	53178-GW2-000	AGS172
HONDA	53178-GW2-900	AGS173
HONDA	53178-425-003	AGS176
HONDA	53178-MF5-000	AGS177
HONDA	53178-422-020	AGS178
HONDA	53178-KPS-900	AGS196
HONDA	53178-GCS-000	AGS197
HONDA	53178-KCH-900	AGS268
HONDA	53178-KPK-900	AGS269
HONDA	53190-443-610	AGS270
HONDA	53178-MEN-A01	AGS271
HONDA	53178-MEN-A01	AGS272
HONDA	53178-HN8-010	AGS284
HONDA	53178-166-000	AGS29
HONDA	53178-KWN-930	AGS292
HONDA	53178KZZ900	AGS300
HONDA	K01300120	AGDS600
HUSABERG	50313002100	AGD02
HUSABERG	50313002100	AGD91
HUSABERG	140010-01	AGD24
HUSABERG	59002031000	AGS09
HUSABERG	59002031000	AGS202
HUSABERG	54802031000	AGS211
HUSQVARNA	77713002000	AGD316
HUSQVARNA	8A0079067	AGD76
HUSQVARNA	8000A7146	AGD210
HUSQVARNA	8000H4663	AGD309
HYOSUNG	5730029C10	AGD58
HYOSUNG	57300HN9102	AGD240
HYOSUNG	57620HJ8250	AGS206
HYOSUNG	57620HN9100	AGDS624
KAWASAKI	13236-1326	AGD03
KAWASAKI	13236-0139	AGD12
KAWASAKI	13236-1221	AGD19
KAWASAKI	46092-1175	AGD63
KAWASAKI	46092-1171	AGD64
KAWASAKI	46092-1148	AGD98
KAWASAKI	46092-1191	AGD108
KAWASAKI	13236-1315	AGD126
KAWASAKI	46092-1172	AGD139
KAWASAKI	46092-1026	AGD140
KAWASAKI	46092-1112	AGD141
KAWASAKI	46092-1135	AGD152
KAWASAKI	46092-1114	AGD180
KAWASAKI	13236-1185	AGD20
KAWASAKI	13236-0024	AGD269
KAWASAKI	13236-0083	AGD270
KAWASAKI	13236-0103	AGD271
KAWASAKI	13236-1286	AGD272
KAWASAKI	46092-1186	AGD275
KAWASAKI	46092-1203	AGD276
KAWASAKI	13236-0169	AGD299
KAWASAKI	13236-0166	AGD314
KAWASAKI	46092-0031	AGS04
KAWASAKI	46092-1170	AGS53
KAWASAKI	46092-1050	AGS54
KAWASAKI	46092-1111	AGS58
KAWASAKI	46092-1165	AGS89
KAWASAKI	46092-1161	AGS104
KAWASAKI	46092-1209	AGS105
KAWASAKI	46076-S014	AGS113
KAWASAKI	13236-1186	AGS117
KAWASAKI	13236-1316	AGS118
KAWASAKI	46092-1204	AGS133
KAWASAKI	46092-1164	AGS137
KAWASAKI	46092-1103	AGS138
KAWASAKI	46092-1113	AGS139
KAWASAKI	46092-1161	AGS140
KAWASAKI	46092-0002	AGS15
KAWASAKI	13236-0104	AGS258
KAWASAKI	13236-1237	AGS259
KAWASAKI	46092-0006	AGS260
KAWASAKI	46092-0016	AGS261
KAWASAKI	46092-1110	AGS262
KAWASAKI	46092-1181	AGS265
KEEWAY	45022K2GP001	AGD249
KEEWAY	40084J00P000	AGS229
KEEWAY	40084J4AT000	AGS230
KTM	83013002000	AGD14
KTM	61013002044	AGD208
KTM	62513002044	AGD292
KTM	46213002000	AGD310
KTM	90113002000	AGD315
KTM	54602031000	AGS10
KTM	54802031000	AGS14
KTM	54602031000	AGS203
KTM	54602055200	AGS23
KTM	61002031000	AGS285
KTM	70013002000	AGDS629
KTM	77713002000	AGD316
KYMCO	53175-KAK-900NJA	AGD122
KYMCO	53175-GN2-90N1	AGD128
KYMCO	53175-KFA5-E100	AGD194
KYMCO	53175LEA5E00	AGD195
KYMCO	53175-2E1IT	AGD196
KYMCO	53175-KB90	AGD197
KYMCO	53175-KKA8-900	AGD243
KYMCO	53175-LBA2-E0M3	AGD244
KYMCO	53175LBD4900M2A	AGD245
KYMCO	53175-LBA7-90	AGD246
KYMCO	53175-LBA8-C0	AGD247
KYMCO	53175-LLB1-80	AGD248
KYMCO	53175-LEC8-E00	AGD295
KYMCO	53175KKE5E00M3A	AGD296
KYMCO	53178-KEC-2E000	AGS110
KYMCO	53178-KFC8-E100	AGS188
KYMCO	53178-KBE-90	AGS189
KYMCO	53178-KCX-E0M3	AGS190
KYMCO	53178-KED-190N1	AGS191
KYMCO	53178-KKA8-90	AGS232
KYMCO	53178-LBA2-E0M3	AGS234
KYMCO	53178-LLB1-90	AGS235
KYMCO	53178-LEC8-E00	AGS290
KYMCO	53178KKE5E00M3A	AGS291
MALAGUTI	12113203	AGDS615
MALAGUTI	12114303	AGDS617
MALAGUTTI	12113303	AGS39
MOTO GUZZI	856048	AGD13
MOTO GUZZI	AP8133667	AGS199
MOTO GUZZI	981046	AGS201
MOTOR HISPANIA	1934052000003	AGS55
MOTOR HISPANIA	1940052000002	AGS56
MOTOR HISPANIA	1946052000001	AGS91
MOTOR HISPANIA	2133071000009	AGDS602
PEUGEOT	752864	AGD48
PEUGEOT	752054	AGD113
PEUGEOT	754273	AGD260
PEUGEOT	754274	AGS247
PEUGEOT	802223	AGS305
PEUGEOT	752869	AGDS603
PEUGEOT	758624	AGDS626
PGO	14001113	AGD284
PGO	14001251	AGS274
PIAGGIO	494473	AGD47
PIAGGIO	269071	AGD54
PIAGGIO	494951	AGD67
PIAGGIO	271449	AGD148
PIAGGIO	70578	AGD169
PIAGGIO	494804	AGD261
PIAGGIO	494804	AGD261
PIAGGIO	564689	AGS41
PIAGGIO	269070	AGS42
PIAGGIO	564683	AGS71
PIAGGIO	648115	AGS128
PIAGGIO	244337	AGS159
PIAGGIO	70578	AGS164
PIAGGIO	497041	AGDS605
PIAGGIO	497040	AGDS612
PIAGGIO	750636	AGDS613
PIAGGIO	646803	AGDS616
PIAGGIO	2425314	AGDS623
PIAGGIO	665870	AGDS627
PIAGGIO	668417	AGDS630
RIEJU	0/000.830.7100	AGD129
RIEJU	5006170029	AGD259
RIEJU	0/000.830.0510	AGS31
RIEJU	5005090008	AGS246
SHERCO	R055	AGD38
SHERCO	621	AGD294
SHERCO	R031	AGS169
SUZUKI	57421-07E00	AGD49
SUZUKI	57421-13001	AGD50
SUZUKI	57421-29C00	AGD57
SUZUKI	57420-49101	AGD61

LEVE / levers

CROSSREFERENCE CON CODICI OEM / Oem codes crossreference

MARCA Brand	**CODICE OEM** OEM Code	**CODICE ACCOSSATO** Accossato Code
SUZUKI	57420-32C00	AGD86
SUZUKI	57420-48B00	AGD87
SUZUKI	57421-02E00	AGD92
SUZUKI	57300-32C10	AGD101
SUZUKI	57310-37F00	AGD112
SUZUKI	57421-13A10	AGD154
SUZUKI	57421-09E00	AGD177
SUZUKI	57300-44G00	AGD262
SUZUKI	57300-45G00	AGD263
SUZUKI	57300-48G00	AGD264
SUZUKI	57420-01D00	AGD265
SUZUKI	57421-39D10	AGD266
SUZUKI	57421-44E00	AGD267
SUZUKI	57421-39D20	AGD268
SUZUKI	57620-38A00	AGS50
SUZUKI	57621-48B00	AGS52
SUZUKI	57620-19C01	AGS57
SUZUKI	57621-28C00	AGS75
SUZUKI	57621-28C20	AGS76
SUZUKI	57620-49101	AGS134
SUZUKI	57620-01D00	AGS135
SUZUKI	57500-07E00	AGS150
SUZUKI	57621-02410	AGS174
SUZUKI	57621-09E00	AGS175
SUZUKI	57621-07G00	AGS210
SUZUKI	57500-10G00	AGS248
SUZUKI	57620-14300	AGS249
SUZUKI	57620-27A31	AGS250
SUZUKI	57620-20A02	AGS251
SUZUKI	57621-0AE00	AGS252
SUZUKI	57621-13E00	AGS253
SUZUKI	57621-38G00	AGS254
SUZUKI	57621-41G00	AGS255
SUZUKI	57621-48G00	AGS256
SUZUKI	57620-21821	AGS257
SUZUKI	57621-13E00	AGS277
SUZUKI	57500-23H00	AGS278
SUZUKI	57420-38A00	AGD318
SYM	53175-KBN-800	AGD252
SYM	53175-A8B-000	AGD253
SYM	53175-H5K-000	AGD254
SYM	53175-HMA-000	AGD255
SYM	53175-LEA-000	AGD256
SYM	53175-HHW-000	AGD257
SYM	53175-H09-020	AGD258
SYM	53175-AAA-000	AGD297
SYM	53175-T6V-000	AGD298
SYM	53178-GAK-900	AGS238
SYM	53178-A7A-000	AGS239

MARCA Brand	**CODICE OEM** OEM Code	**CODICE ACCOSSATO** Accossato Code
SYM	53178-H01-800	AGS240
SYM	53178-H5K-000	AGS241
SYM	53178-H9D-000	AGS242
SYM	53178-HMA-000	AGS243
SYM	53178-HHW-000	AGS244
SYM	53178-M92-010	AGS245
TGB	414041	AGD290
TGB	414040	AGS283
TRIUMPH	T2046500	AGS306
TRIUMPH	T2046511	AGS307
YAMAHA	5VY-83922-00	AGD09
YAMAHA	3GM-83922-00	AGD34
YAMAHA	31A-83922-00	AGD35
YAMAHA	3RN-83922-00	AGD43
YAMAHA	2W1-83922-00	AGD59
YAMAHA	4L0-83922-00	AGD60
YAMAHA	5AD-H3922-00	AGD78
YAMAHA	4SS-83922-00	AGD82
YAMAHA	5MLH39220000	AGD88
YAMAHA	3GF-H3922-00	AGD89
YAMAHA	1DN-H3922-00	AGD116
YAMAHA	5RW-H3922-00	AGD121
YAMAHA	5BN-83922-00	AGD124
YAMAHA	3FV-83922-00	AGD125
YAMAHA	2T4-83922-01	AGD133
YAMAHA	3YX-83922-00	AGD136
YAMAHA	1FK-83922-00	AGD137
YAMAHA	36Y-83922-00	AGD138
YAMAHA	5WX-H3922-00	AGD142
YAMAHA	1D4-F6165-00	AGD143
YAMAHA	3YR-83922-00	AGD155
YAMAHA	21L-H3922-00	AGD158
YAMAHA	4SB-H3922-10	AGD163
YAMAHA	5GJ-83922-00	AGD198
YAMAHA	3RY-83922-01	AGD202
YAMAHA	5CG-83922-01	AGD204
YAMAHA	5TG-83922-00	AGD213
YAMAHA	5VK-83922-00	AGD214
YAMAHA	3D9-H3922-00	AGD218
YAMAHA	1D7-83922-10	AGD220
YAMAHA	5VS-83922-00	AGD221
YAMAHA	1B9-H3922-00	AGD222
YAMAHA	5EU-H3922-00	AGD223
YAMAHA	5XC-83922-G0	AGD224
YAMAHA	5XC-83922-G0	AGD225
YAMAHA	5NT-H3922-00	AGD233
YAMAHA	13D-F6165-00	AGD234
YAMAHA	5KM-83922-00	AGD235
YAMAHA	4B5-83922-00	AGD287

MARCA Brand	**CODICE OEM** OEM Code	**CODICE ACCOSSATO** Accossato Code
YAMAHA	5MLH39221000	AGD307
YAMAHA	1DX839220000	AGD308
YAMAHA	4XV-83912-10	AGS01
YAMAHA	5EB-83912-00	AGS03
YAMAHA	3YX-83912-00	AGS06
YAMAHA	3GM-83912-00	AGS47
YAMAHA	2GV-83912-00	AGS48
YAMAHA	10W-83912-00	AGS49
YAMAHA	5AD-H3912-01	AGS67
YAMAHA	5MLH39121000	AGS79
YAMAHA	3UH-H3912-00	AGS80
YAMAHA	1D4-H3912-10	AGS92
YAMAHA	5HD-83912-00	AGS97
YAMAHA	4VP-H39121-00	AGS102
YAMAHA	4XY-83912-00	AGS103
YAMAHA	3RN-83922-00	AGS108
YAMAHA	3FY-83912-01	AGS109
YAMAHA	4PC-H3912-00	AGS114
YAMAHA	5ME-H3912-00	AGS115
YAMAHA	2T4-83912-01	AGS127
YAMAHA	5TJ-83912-00	AGS130
YAMAHA	3HE-83912-00	AGS131
YAMAHA	1AE-83912-00	AGS132
YAMAHA	5JN-H3912-00	AGS136
YAMAHA	5CG-83912-11	AGS148
YAMAHA	4SB-H3912-10	AGS158
YAMAHA	3FY-83912-01	AGS179
YAMAHA	4KM-83912-00	AGS182
YAMAHA	5GJ-83912-00	AGS193
YAMAHA	3D9-H3912-00	AGS208
YAMAHA	5TJ-83912-80	AGS212
YAMAHA	11C-83912-00	AGS213
YAMAHA	5EU-H3912-00	AGS214
YAMAHA	1D7-83912-10	AGS215
YAMAHA	1B9-H3912-00	AGS216
YAMAHA	1S4-H3912-00	AGS223
YAMAHA	31A-83912-00	AGS27
YAMAHA	5D7-H3912-00	AGS276
YAMAHA	11D-H3912-00	AGS279
YAMAHA	4B5-83912-00	AGS280
YAMAHA	17D839120000	AGS294
YAMAHA	17D839120000	AGS295
YAMAHA	3C6-H3912-00	AGDS628
YAMAHA	1PHH39120000	AGDS631
YAMAHA	1DKH39120000	AGDS643
YAMAHA	53B-H3912-00	AGS308
YAMAHA	5VVH39220000	AGD317

ACCOSSATO

LEVE / levers

INDICE ANALITICO LEVE / levers index

MARCA Brand	CC	MODELLO Model	ANNI Years	LEVA FRIZIONE Clutch Lever	LEVA FRENO Brake Lever	NOTE Notes
APRILIA	50	AF1 Futura	90-92	-	AGD189	
APRILIA	50	AF1 Project 108	88	-	AGD189	
APRILIA	50	Amico	-96	AGS44	AGD40	**Disco-Tamburo** / Disc-Drum
APRILIA	50	Amico	-96	AGS44	AGD184	**Tamburo-Tamburo** / Drum-Drum
APRILIA	50	Amico	97-98	AGS43	AGD39	**Disco-Tamburo** / Disc-Drum
APRILIA	50	Amico	97-98	AGS43	AGD183	**Tamburo-Tamburo** / Drum-Drum
APRILIA	50	Amico GL/LX/Sport	92-95	AGS44	AGD40	
APRILIA	50	Amico GLE/Cat.	92-93	AGS44	AGD40	
APRILIA	50	Area 51	98-00	AGS93	AGD103	
APRILIA	50	Classic	92-95	AGS81	AGD189	
APRILIA	50	Classic	96-99	AGS02	AGD192	
APRILIA	50	Compay Custom 2T	04-05	AGS05	AGD175	
APRILIA	50	Gulliver AC	95	AGS44	AGDS606	
APRILIA	50	Gulliver AC	96-98	AGS43	AGDS633	
APRILIA	50	Gulliver LC	96-98	AGS43	AGDS641	
APRILIA	50	Habana Custom 2T	04-05	AGS05	AGD175	
APRILIA	50	Habana Custom 2T	99-03	AGS05	AGD175	
APRILIA	50	Habana Retro 2T	99-03	AGS43	AGDS641	
APRILIA	50	Mojito Custom 2T	04-05	AGS05	AGD175	
APRILIA	50	Mojito Custom 2T	99-03	AGS05	AGD175	
APRILIA	50	Mojito Retro 2T	99-03	AGS43	AGDS641	
APRILIA	50	MX Motard	95-97	-	AGD189	
APRILIA	50	Pegaso	92-94	-	AGD189	
APRILIA	50	Rally AC	95-03	AGS43	AGD39	
APRILIA	50	Rally AC	95-03	AGS44	AGD40	
APRILIA	50	Rally LC	96-99	AGDS604	AGDS604	
APRILIA	50	Red Rose	89-92	AGS81	AGD189	
APRILIA	50	RS	06-09	AGS45	AGD215	
APRILIA	50	RS	93-95	-	AGD189	
APRILIA	50	RS	96-98	AGS30	AGD45	
APRILIA	50	RS	99-05	AGS87	AGD97	
APRILIA	50	RS Tuono	03-04	AGS91	AGD97	
APRILIA	50	RS4 2T	11-	AGS45	AGDS600	
APRILIA	50	RX	95-96	-	AGD189	
APRILIA	50	RX	97-02	AGS30	AGD45	
APRILIA	50	RX 3 Marce	91-94	-	AGD189	
APRILIA	50	RX 5 Marce	91-94	-	AGD189	
APRILIA	50	RX Enduro	95-97	-	AGD189	
APRILIA	50	Scarabeo 2T	97	AGS63	AGD190	**Tamburo-Tamburo** / Drum-Drum
APRILIA	50	Scarabeo 2T	05-09	AGS63	AGD39	
APRILIA	50	Scarabeo 2T	11-	AGS63	AGD39	**Serie Special**
APRILIA	50	Scarabeo 2T	93-96	AGS64	AGD191	**Tamburo-Tamburo** / Drum-Drum
APRILIA	50	Scarabeo 2T	93-97	AGS63	AGD39	**Disco-Tamburo** / Disc-Drum
APRILIA	50	Scarabeo 2T	93-97	AGS64	AGD40	**Disco-Tamburo** / Disc-Drum
APRILIA	50	Scarabeo 2T Minarelli	93-05	AGS65	AGD39	**Disco-Disco**
APRILIA	50	Scarabeo 2T Minarelli	93-05	AGS63	AGD39	**Disco-Tamburo** / Disc-Drum
APRILIA	50	Scarabeo 2T Piaggio	05-06	AGS63	AGD39	
APRILIA	50	Scarabeo 4T	02-09	AGS63	AGD39	
APRILIA	50	Scarabeo 4T RST	06-	AGS63	AGD39	
APRILIA	50	Scarabeo Di-Tech	01-04	AGDS641	AGD39	**Europa**
APRILIA	50	Scarabeo Di-Tech	00-04	AGS65	AGD39	**USA**
APRILIA	50	Scarabeo Quattro	09-	AGS63	AGD39	
APRILIA	50	Scarabeo Street	05-	AGS63	AGD39	
APRILIA	50	Scarabeo Street RST	06-	AGS63	AGD39	
APRILIA	50	Sonic	98-13	AGS43	AGDS641	**Grimeca**
APRILIA	50	Sonic	98-13	AGS43	AGD301	**Hengtong**
APRILIA	50	Sonic GP	98-13	AGS43	AGDS641	**Grimeca**
APRILIA	50	Sonic GP	98-13	AGS43	AGD301	**Hengtong**
APRILIA	50	Sport City One 2T	08-	AGS41	AGDS605	
APRILIA	50	Sport City One 4T	08-	AGS41	AGDS605	
APRILIA	50	SR	93-96	AGS44	AGD40	

LEVE / levers

INDICE ANALITICO LEVE / levers index

MARCA Brand	CC	MODELLO Model	ANNI Years	LEVA FRIZIONE Clutch Lever	LEVA FRENO Brake Lever	NOTE Notes
APRILIA	50	SR 50R Factory	04-08	AGDS640	AGDS640	Grimeca
APRILIA	50	SR 50R Factory	04-08	AGDS608	AGDS608	Hengtong
APRILIA	50	SR 50R Replica SBK	10-	AGDS640	AGDS640	Grimeca
APRILIA	50	SR 50R Replica SBK	10-	AGDS608	AGDS608	Hengtong
APRILIA	50	SR AC	00-01	AGS44	AGDS614	
APRILIA	50	SR AC	93-96	AGS43	AGD39	
APRILIA	50	SR AC	97-99	AGS43	AGDS641	
APRILIA	50	SR Carb/Ditech	05-08	AGDS640	AGDS640	Grimeca
APRILIA	50	SR Carb/Ditech	05-08	AGDS608	AGDS608	Hengtong
APRILIA	50	SR LC	93-96	AGS43	AGD39	
APRILIA	50	SR LC	97-01	AGDS641	AGDS641	Disco-Disco
APRILIA	50	SR LC	97-01	AGS43	AGDS641	Disco-Tamburo / Disc-Drum
APRILIA	50	SR LC Carb.	97-01	AGDS614	AGDS614	
APRILIA	50	SR LC DiTech	97-01	AGDS614	AGDS614	
APRILIA	50	SR Motard	12-	AGS41	AGD115	
APRILIA	50	SR R Factory Carb.	10-	AGDS610	AGDS610	
APRILIA	50	SR R Factory IE	10-	AGDS610	AGDS610	
APRILIA	50	SR Street	03-08	AGDS614	AGDS614	Grimeca
APRILIA	50	SR www	00-02	AGS43	AGDS641	
APRILIA	50	SR www	97-99	AGS44	AGDS614	
APRILIA	50	Tuareg Rally	90-92	-	AGD189	
APRILIA	50	Tuono	03-04	AGS91	-	
APRILIA	100	Scarabeo 2T	00-	AGS63	AGD39	
APRILIA	100	Scarabeo 4T	01-06	AGS63	AGD39	
APRILIA	100	Scarabeo 4T Net	10-	AGS63	AGD39	
APRILIA	100	Scarabeo 4T RST	06-	AGS63	AGD39	
APRILIA	125	Arrecife	03-08	AGDS619	AGDS619	Grimeca
APRILIA	125	Atlantic	03-08	AGDS619	AGDS619	Grimeca
APRILIA	125	Atlantic	03-08	AGDS609	AGDS609	Hengtong
APRILIA	125	ETX		AGS91	AGD181	
APRILIA	125	Habana Custom	03-08	AGS05	AGD175	
APRILIA	125	Habana Custom	99-01	AGS05	AGD175	
APRILIA	125	Habana Retro	03-07	AGS43	AGDS641	
APRILIA	125	Habana Retro	99-01	AGS43	AGDS641	
APRILIA	125	Leonardo	96-98	AGS65	AGD39	
APRILIA	125	Leonardo	99-05	AGDS641	AGDS641	
APRILIA	125	Leonardo ST	99-05	AGDS641	AGDS641	
APRILIA	125	Mojito Custom	03-08	AGS05	AGD175	
APRILIA	125	Mojito Retro	03-08	AGS43	AGDS641	
APRILIA	125	Mojito Retro	99-01	AGS43	AGDS641	
APRILIA	125	MX Super Motard	04-06	AGS91	AGD181	
APRILIA	125	Pegaso	89-94	-	AGD189	
APRILIA	125	RS	06-09	AGS217	AGD226	
APRILIA	125	RS	96-05	AGS91	AGD102	
APRILIA	125	RS Alitalia Replica	10-	AGS217	AGD226	
APRILIA	125	RS4 4T-4V	11-	AGS45	AGDS600	
APRILIA	125	RX	08-	AGS91	-	Grimeca
APRILIA	125	RX	08-	AGS91	AGD226	Hengtong
APRILIA	125	RX	94-98	AGS91	AGD181	
APRILIA	125	RX Enduro/MX Motard	97-	AGS91	-	
APRILIA	125	Scarabeo	03-06	AGDS619	AGDS619	Piaggio
APRILIA	125	Scarabeo	03-06	AGDS619	AGDS619	Rotax
APRILIA	125	Scarabeo (Piaggio)	03-08	AGDS609	AGDS609	Hengtong
APRILIA	125	Scarabeo (Rotax)	04	AGDS619	AGDS619	USA
APRILIA	125	Scarabeo (Rotax)	99-02	AGDS618	AGDS618	Europa No Italia
APRILIA	125	Scarabeo (Rotax)	99-02	AGDS619	AGDS619	Solo Italia
APRILIA	125	Scarabeo 125ie	10-	AGDS619	AGDS619	Grimeca
APRILIA	125	Scarabeo 125ie	10-	AGDS609	AGDS609	Hengtong
APRILIA	125	Scarabeo GT	02	AGDS619	AGDS619	Rotax
APRILIA	125	Scarabeo Light	07-	AGDS609	AGDS609	
APRILIA	125	Sport City	04-	AGDS608	AGDS640	

ACCOSSATO

LEVE / levers

INDICE ANALITICO LEVE / levers index

MARCA Brand	CC	MODELLO Model	ANNI Years	LEVA FRIZIONE Clutch Lever	LEVA FRENO Brake Lever	NOTE Notes
APRILIA	125	Sport City Cube	08-	AGDS609	AGDS609	
APRILIA	125	Sport City One	08-	AGS41	AGDS605	
APRILIA	125	SR	-99	AGS43	AGDS641	
APRILIA	125	SR	99-01	AGS44	AGDS614	
APRILIA	125	SR Max	11-	AGDS610	AGDS610	
APRILIA	125	SR Motard	12-	AGS41	AGD115	
APRILIA	125	SX	08-	AGS91	-	Grimeca
APRILIA	125	SX	08-	AGS91	AGD226	Hengtong
APRILIA	125	Tuono	01-02	AGS87	AGD97	
APRILIA	125	Tuono	03-04	AGS91	AGD102	
APRILIA	150	Habana Custom	03-08	AGS05	AGD175	
APRILIA	150	Habana Retro	03-08	AGS43	AGDS641	
APRILIA	150	Leonardo	96-98	AGS65	AGD39	
APRILIA	150	Leonardo	99-05	AGDS641	AGDS641	
APRILIA	150	Leonardo ST	99-05	AGDS641	AGDS641	
APRILIA	150	Mojito Custom	03-08	AGS05	AGD175	
APRILIA	150	Mojito Retro	03-08	AGS43	AGDS641	
APRILIA	150	Scarabeo	03	AGDS619	AGDS619	Rotax
APRILIA	150	Scarabeo	99-01	AGDS618	AGDS618	Rotax
APRILIA	150	Scarabeo (Rotax)	02	AGDS619	AGDS619	Italia
APRILIA	150	Scarabeo (Rotax)	04	AGDS619	AGDS619	USA
APRILIA	150	SR	-99	AGS43	AGDS641	
APRILIA	150	SR	99-01	AGS44	AGDS614	
APRILIA	200	Arrecife	03-08	AGDS619	AGDS619	Grimeca
APRILIA	200	Atlantic	03-08	AGDS619	AGDS619	Grimeca
APRILIA	200	Atlantic	03-08	AGDS609	AGDS609	Hengtong
APRILIA	200	Scarabeo	03	AGDS619	AGDS619	Rotax
APRILIA	200	Scarabeo (Piaggio)	03-08	AGDS619	AGDS619	Grimeca
APRILIA	200	Scarabeo (Piaggio)	04-08	AGDS609	AGDS609	Hengtong
APRILIA	200	Scarabeo (Rotax)	02	AGDS619	AGDS619	Italia
APRILIA	200	Scarabeo (Rotax)	04	AGDS619	AGDS619	USA
APRILIA	200	Scarabeo (Rotax)	99-02	AGDS618	AGDS618	Europa No Italia
APRILIA	200	Scarabeo Class	10-	AGDS619	AGDS619	Grimeca
APRILIA	200	Scarabeo Class	10-	AGDS609	AGDS609	Hengtong
APRILIA	200	Scarabeo GT	02	AGDS619	AGDS619	Rotax
APRILIA	200	Scarabeo Light	07-	AGDS609	AGDS609	
APRILIA	200	Sport City	04-08	AGDS640	AGDS640	Grimeca
APRILIA	200	Sport City	04-08	AGDS608	AGDS608	Hengtong
APRILIA	200	Sport City Cube	08-	AGDS609	AGDS609	
APRILIA	250	Arrecife	03-08	AGDS619	AGDS619	Grimeca
APRILIA	250	Atlantic	03-08	AGDS619	AGDS619	Grimeca
APRILIA	250	Atlantic	03-08	AGDS609	AGDS609	Hengtong
APRILIA	250	Leonardo	02-04	AGDS607	AGDS607	Minarelli
APRILIA	250	Leonardo	99-01	AGDS607	AGDS607	Yamaha
APRILIA	250	Leonardo ST	01	AGDS607	AGDS607	Yamaha
APRILIA	250	RS	95-97	AGS91	-	
APRILIA	250	RS	98-03	AGS91	AGD210	
APRILIA	250	Scarabeo (Piaggio)	04-08	AGDS619	AGDS619	Grimeca
APRILIA	250	Scarabeo (Piaggio)	04-08	AGDS609	AGDS609	Hengtong
APRILIA	250	Scarabeo Light	06-08	AGDS619	AGDS619	
APRILIA	250	Scarabeo Light	07-	AGDS609	AGDS609	
APRILIA	250	Sport City	07	AGDS640	AGDS640	Grimeca
APRILIA	250	Sport City	07	AGDS608	AGDS608	Hengtong
APRILIA	250	Sport City Cube	08-	AGDS609	AGDS609	
APRILIA	300	Atlantic S	10-	AGDS619	AGDS619	Grimeca
APRILIA	300	Atlantic S	10-	AGDS609	AGDS609	Hengtong
APRILIA	300	Leonardo	02-04	AGDS607	AGDS607	Minarelli
APRILIA	300	Scarabeo Class	10-	AGDS619	AGDS619	Grimeca
APRILIA	300	Scarabeo Class	10-	AGDS609	AGDS609	Hengtong
APRILIA	300	Scarabeo Light	09-	AGDS619	AGDS619	Grimeca
APRILIA	300	Scarabeo Light	09-	AGDS609	AGDS609	Hengtong

LEVE / levers

INDICE ANALITICO LEVE / levers index

MARCA Brand	CC	MODELLO Model	ANNI Years	LEVA FRIZIONE Clutch Lever	LEVA FRENO Brake Lever	NOTE Notes
APRILIA	300	Scarabeo Special	10-	AGDS619	AGDS619	Grimeca
APRILIA	300	Scarabeo Special	10-	AGDS609	AGDS609	Hengtong
APRILIA	300	Sport City Cube	09-	AGDS609	AGDS609	
APRILIA	300	Sport City Cube	10-	AGDS609	AGDS609	Black Line
APRILIA	300	SR Max	11-	AGDS610	AGDS610	
APRILIA	400	Atlantic Sprint	05-08	AGDS609	AGDS609	Hengtong
APRILIA	400	Scarabeo Light	06-08	AGDS609	AGDS609	Hengtong
APRILIA	450	MXV	09-	AGS87	AGD93	Dx forgiata / R forged
APRILIA	450	RXV 4.5	06-	AGS87	AGD175	
APRILIA	450	RXV 4.5 Replica	08	AGS87	AGD175	
APRILIA	450	SXV 4.5	06-	AGS87	AGD175	
APRILIA	450	SXV 4.5 Replica	08	AGS87	AGD175	
APRILIA	500	Arrecife	01-04	AGDS618	AGDS618	
APRILIA	500	Atlantic	01-04	AGDS618	AGDS618	
APRILIA	500	Atlantic Sprint	04-08	AGDS619	AGDS619	Grimeca
APRILIA	500	Atlantic Sprint	05-08	AGDS609	AGDS609	Hengtong
APRILIA	500	Scarabeo	03-06	AGDS618	AGDS618	
APRILIA	500	Scarabeo Class	10-	AGDS619	AGDS619	Grimeca
APRILIA	500	Scarabeo Class	10-	AGDS609	AGDS609	Hengtong
APRILIA	500	Scarabeo Light	06-08	AGDS609	AGDS609	Hengtong
APRILIA	550	RXV 5.5	06-	AGS87	AGD175	
APRILIA	550	RXV 5.5 Replica	08	AGS87	AGD175	
APRILIA	550	SXV 5.5	06-	AGS87	AGD175	
APRILIA	550	SXV 5.5 Replica	08	AGS87	AGD175	
APRILIA	650	Motó 6.5	95-99	AGS91	-	
APRILIA	650	Pegaso	92-96	AGS91	AGD181	
APRILIA	650	Pegaso	97-00	AGS91	AGD181	
APRILIA	650	Pegaso 3	97-00	AGS91	AGD181	
APRILIA	650	Pegaso I.E.	01-04	AGS91	AGD181	
APRILIA	660	Pegaso Factory	05-	AGS91	AGD175	
APRILIA	660	Pegaso Fun	05-	AGS91	AGD175	
APRILIA	660	Pegaso Strada	05-	AGS91	AGD175	
APRILIA	660	Pegaso Trail	05-	AGS91	AGD175	
APRILIA	750	Dorsoduro	08-	AGS16	AGD13	
APRILIA	750	Dorsoduro Factory	10-	AGS16	AGD13	
APRILIA	750	Shiver	07-	AGS16	AGD13	
APRILIA	750	Shiver GT	09-	AGS16	AGD13	
APRILIA	850	Maná	08-	-	AGD13	
APRILIA	850	Maná GT	09-	-	AGD13	
APRILIA	850	Maná GT ABS	10-	-	AGD13	
APRILIA	850	SRV	12-	AGS16	AGD13	
APRILIA	850	SRV ABS ATC	12-	AGS16	AGD13	
APRILIA	1000	ETV Capo Nord	01-03	AGS201	-	
APRILIA	1000	ETV Capo Nord	04-07	AGS201	-	
APRILIA	1000	ETV Rally	01-03	AGS201	-	
APRILIA	1000	RST Futura	01-03	AGS201	-	
APRILIA	1000	RSV	98-03	AGS201	AGD210	
APRILIA	1000	RSV Mille	01-	AGS201	AGD210	
APRILIA	1000	RSV R	04-08	AGS199	AGD208	
APRILIA	1000	RSV R Dream	04-08	AGS199	AGD208	
APRILIA	1000	RSV R Factory	04-08	AGS199	AGD208	
APRILIA	1000	RSV SP	99	AGS201	AGD210	
APRILIA	1000	RSV4	09-	AGS199	AGD208	
APRILIA	1000	RSV4 Factory	09-	AGS01	AGD208	
APRILIA	1000	RSV4 Factory	10-	AGS01	AGD208	APRC SE
APRILIA	1000	RSV4R	10-	AGS01	AGD208	
APRILIA	1000	SL FALCO	00-03	AGS201	AGD210	
APRILIA	1000	Tuono	02-05	AGS201	AGD210	
APRILIA	1000	Tuono R/Factory	06-	AGS201	AGD210	
APRILIA	1000	Tuono V4R	11-	AGS01	AGD210	
APRILIA	1200	Dorsoduro	11-	AGS201	AGD210	

ACCOSSATO

LEVE / levers

INDICE ANALITICO LEVE / levers index

MARCA Brand	CC	MODELLO Model	ANNI Years	LEVA FRIZIONE Clutch Lever	LEVA FRENO Brake Lever	NOTE Notes
BAOTIAN	50	BT49QT-12	06-07	AGS246	AGD277	
BAOTIAN	50	BT49QT-7	06-07	AGS246	AGD277	
BAOTIAN	50	BT49QT-9	06-07	AGS246	AGD277	
BAOTIAN	50	BT49QT-9B	06	AGS246	AGD277	
BAOTIAN	50	BT49QT-9M	06-07	AGS246	AGD277	
BAOTIAN	50	BT49QT-9N	06-07	AGS246	AGD277	
BAOTIAN	50	BT49QT-9R	06-07	AGS246	AGD277	
BENELLI	125	Macis	10-	AGDS614	AGDS614	
BENELLI	150	Macis	10-	AGDS614	AGDS614	
BENELLI	899	Café Racer	10-	AGS91	AGD210	
BENELLI	899	TNT	08-09	AGS91	AGD118	
BENELLI	899	TNT S	09-	AGS91	AGD118	
BENELLI	899	TRE-K	09-	AGS91	AGD118	
BENELLI	899	TRE-K Amazonas	10-	AGS91	AGD118	
BENELLI	900	Tornado LE	02-03	-	AGD210	
BENELLI	900	Tornado RS	04-05	AGS91	AGD210	
BENELLI	900	Tornado TRE	03	AGS91	AGD210	
BENELLI	1130	TNT	04-06	AGS91	AGD118	
BENELLI	1130	TNT Café Racer	06-07	AGS91	AGD210	
BENELLI	1130	TNT Café Racer	10-	AGS91	AGD210	
BENELLI	1130	TNT R160	10-	AGS199	AGD208	
BENELLI	1130	TNT Sport	04-06	AGS91	AGD118	
BENELLI	1130	TNT Sport EVO	07	AGS91	AGD118	
BENELLI	1130	TNT Titanium	05-07	AGS91	AGD118	
BENELLI	1130	Tornado TNT R160	10-	-	AGD09	Brembo
BENELLI	1130	Tornado TRE	07	AGS91	AGD210	
BENELLI	1130	TRE-K	08-	AGS91	AGD118	
BENELLI	1130	TRE-K Amazonas	07-	AGS91	AGD118	
BENELLI	1130	TRE-K Bianco-Rosso	08	AGS91	AGD118	
BETA	50	ARK AC	96-09	AGS64	AGD40	
BETA	50	ARK LC	04-	AGS66	AGD40	
BETA	50	ARK LC	96-03	AGS64	AGD40	
BETA	50	ARK LC Serie K	04-	AGS66	AGD40	
BETA	50	Eikon	99-03	AGS66	AGD40	
BETA	50	Mini Cross Pro-Race	03	AGS31	AGD161	
BETA	50	MiniTrial	09-	-	AGD173	
BETA	50	Prorace		AGS31	AGD161	Brembo
BETA	50	Prorace		AGS31	AGDS632	AJP
BETA	50	Quadra Chrono 502	-96	AGS56	AGD74	
BETA	50	Quadra Chrono 502	96-99	AGS64	AGD40	
BETA	50	Rev	02-08	AGS171	AGD38	**Sx lunga Dx corta** / L long R short
BETA	50	RK6		AGS31	AGD161	Brembo
BETA	50	RK6	93-96	AGS31	AGDS632	
BETA	50	RR	99-02	AGS31	AGDS632	
BETA	50	RR AM6	02-04	AGS31	AGDS632	
BETA	50	RR AM6	05-08	AGS02	AGDS622	
BETA	50	RR Enduro	98-99	AGS30	AGDS600	
BETA	50	RR Motard AM6	03-04	AGS31	AGDS632	
BETA	50	RR Motard AM6	05-08	AGS02	AGDS622	
BETA	50	RR Motard Track	08-	AGS02	AGDS622	
BETA	50	RR Racing		AGS31	AGD161	Brembo
BETA	50	RR Racing	01-02	AGS31	AGDS632	
BETA	50	RR Standard AM6	03-04	AGS31	AGDS632	
BETA	50	RR Standard AM6	05-08	AGS02	AGDS622	
BETA	50	RR Supermotard	98-99	AGS31	AGDS602	
BETA	50	RR Supermotard AM6	02	AGS31	AGDS632	
BETA	50	RR6 I/II Series	97-98	AGS31	AGDS632	
BETA	50	Tempo	96-99	AGS56	AGD74	
BETA	80	EVO Junior	09-	AGS171	AGD38	**Sx lunga Dx corta** / L long R short
BETA	80	EVO Senior	10-	AGS170	AGD173	**Sx+Dx lunga** / L+R long
BETA	80	Rev 80	03-07	AGS171	AGD38	**Dx corta** / R short

LEVE / levers

INDICE ANALITICO LEVE / levers index

MARCA Brand	**CC**	**MODELLO** Model	**ANNI** Years	**LEVA FRIZIONE** Clutch Lever	**LEVA FRENO** Brake Lever	**NOTE** Notes
BETA	**125**	**Alp 4T**	**03-08**	**AGS02**	**AGDS622**	
BETA	**125**	**Eikon**	**00-02**	**AGS66**	**AGD40**	
BETA	**125**	**EVO 2T**	**09-**	**AGS170**	**AGD173**	**Sx+Dx lunga** / L+R long
BETA	**125**	**RE 4T**	**11-**	**AGS02**	**AGDS622**	
BETA	**125**	**Rev 3**	**03-05**	**AGS171**	**AGD174**	**Sx+Dx lunga** / L+R long
BETA	**125**	**RR 4T**	**05-06**	**AGS02**	**AGDS622**	
BETA	**125**	**RR Enduro 4T LC**	**08-**	**AGS02**	**AGDS622**	
BETA	**125**	**RR Motard 4T LC**	**08-**	**AGS02**	**AGDS622**	
BETA	**125**	**Urban**	**08-**	**AGS02**	**AGDS622**	
BETA	**125**	**Urban Special**	**08-**	**AGS02**	**AGDS622**	
BETA	**150**	**Eikon**	**00-02**	**AGS66**	**AGD40**	
BETA	**200**	**Alp 200**		**AGS02**	**AGD206**	
BETA	**200**	**Alp 4T**	**03-08**	**AGS02**	**AGDS622**	
BETA	**200**	**EVO 2T**	**09-**	**AGS170**	**AGD173**	**Sx+Dx lunga** / L+R long
BETA	**200**	**Rev 3**	**03-05**	**AGS171**	**AGD174**	**Sx+Dx lunga** / L+R long
BETA	**200**	**Urban**	**08-**	**AGS02**	**AGDS622**	
BETA	**200**	**Urban Special**	**08-**	**AGS02**	**AGDS622**	
BETA	**250**	**EVO 2T**	**09-**	**AGS170**	**AGD173**	**Sx+Dx lunga** / L+R long
BETA	**250**	**EVO 4T**	**09-**	**AGS170**	**AGD173**	**Sx+Dx lunga** / L+R long
BETA	**250**	**Rev 3**	**00-04**	**AGS171**	**AGD174**	**Dx. lunga** / R long
BETA	**250**	**RR 4T**	**05-07**	**AGS170**	**AGD93**	**Sx lunga Dx corta** / L long R short
BETA	**250**	**Techno**	**94-95**	**AGS31**	**AGDS632**	
BETA	**260**	**Alp**	**95**	**AGS31**	**AGDS632**	
BETA	**270**	**Rev 3**	**03-04**	**AGS171**	**AGD174**	**Sx+Dx lunga** / L+R long
BETA	**290**	**EVO 2T**	**09-**	**AGS170**	**AGD173**	**Sx+Dx lunga** / L+R long
BETA	**300**	**EVO 4T**	**09-**	**AGS170**	**AGD173**	**Sx+Dx lunga** / L+R long
BETA	**350**	**Alp 4.0**	**-04**	**AGS02**	**AGD206**	
BETA	**350**	**Alp 4.0**	**04-**	**AGS02**	**AGDS622**	
BETA	**350**	**Alp Motard M4**	**04-08**	**AGS02**	**AGDS622**	
BETA	**350**	**Motard 4.0**		**AGS02**	**AGD206**	
BETA	**350**	**Motard 4.0**	**05-06**	**AGS02**	**AGDS641**	
BETA	**350**	**Motard M4**	**08-**	**AGS02**	**AGDS622**	
BETA	**350**	**RR Enduro 4T**	**10-**	**AGS170**	**AGD93**	**Sx lunga Dx corta** / L long R short
BETA	**400**	**RR 4T**	**05-07**	**AGS170**	**AGD93**	**Sx lunga Dx corta** / L long R short
BETA	**400**	**RR 4T**	**10-**	**AGS170**	**AGD93**	**Sx lunga Dx corta** / L long R short
BETA	**400**	**RR Enduro 4T**	**08-09**	**AGS170**	**AGD93**	**Sx lunga Dx corta** / L long R short
BETA	**400**	**RR Enduro 4T**	**10-**	**AGS170**	**AGD93**	**Sx lunga Dx corta** / L long R short
BETA	**400**	**RR Motard 4T**	**08-09**	**AGS170**	**AGD93**	**Sx lunga Dx corta** / L long R short
BETA	**450**	**RR 4T**	**05-07**	**AGS170**	**AGD93**	**Sx lunga Dx corta** / L long R short
BETA	**450**	**RR 4T**	**10-**	**AGS170**	**AGD93**	**Sx lunga Dx corta** / L long R short
BETA	**450**	**RR Enduro 4T**	**08-09**	**AGS170**	**AGD93**	**Sx lunga Dx corta** / L long R short
BETA	**450**	**RR Motard 4T**	**08-09**	**AGS170**	**AGD93**	**Sx lunga Dx corta** / L long R short
BETA	**520**	**RR 4T**	**10-**	**AGS170**	**AGD93**	**Sx lunga Dx corta** / L long R short
BETA	**520**	**RR Enduro 4T**	**10-**	**AGS170**	**AGD93**	**Sx lunga Dx corta** / L long R short
BETA	**525**	**RR 4T**	**05-07**	**AGS170**	**AGD93**	**Sx lunga Dx corta** / L long R short
BETA	**525**	**RR Enduro 4T**	**08-09**	**AGS170**	**AGD93**	**Sx lunga Dx corta** / L long R short
BETA	**525**	**RR Motard 4T**	**08-09**	**AGS170**	**AGD93**	**Sx lunga Dx corta** / L long R short
BMW	**450**	**G 450X**	**07-**	**AGS261**	**AGD219**	**Dx+Sx forg.** / R+L forged
BMW	**450**	**G 450X**	**07-**	**AGS261**	**AGD10**	**Sx forgiata** / L forged
BMW	**600**	**C Sport**	**11-**	**AGS248**	**AGD11**	**K18**
BMW	**650**	**C 650 GT**	**11-**	**AGS248**	**AGD11**	**K18**
BMW	**650**	**F 650**	**93-03**	**AGS81**	**AGD200**	
BMW	**650**	**F 650CS**	**93-03**	**AGS81**	**AGD200**	
BMW	**650**	**F 650GS**	**07-13**	**AGS299**	**AGD306**	**K72**
BMW	**650**	**F 650GS**	**04-**	**AGS204**	**AGD200**	
BMW	**650**	**F 650GS**	**93-03**	**AGS81**	**AGD200**	
BMW	**650**	**F 650GS Dakar**	**04-**	**AGS204**	**AGD200**	
BMW	**650**	**F 650GS Dakar**	**93-03**	**AGS81**	**AGD200**	
BMW	**650**	**G 650 Xchallenge**	**07-**	**AGS91**	**AGD199**	
BMW	**650**	**G 650 Xchallenge**	**07-**	**AGS92**	**AGD200**	
BMW	**650**	**G 650 Xcountry**	**07-**	**AGS91**	**AGD199**	

ACCOSSATO

LEVE / levers

INDICE ANALITICO LEVE / levers index

MARCA Brand	CC	MODELLO Model	ANNI Years	LEVA FRIZIONE Clutch Lever	LEVA FRENO Brake Lever	NOTE Notes
BMW	650	G 650 Xcountry	07-	AGS92	AGD200	
BMW	650	G 650 Xmoto	07-	AGS91	AGD199	
BMW	650	G 650 Xmoto	07-	AGS92	AGD200	
BMW	650	G 650GS	09-13	AGS204	AGD200	R131
BMW	650	G 650GS Sertao	11-13	AGS204	AGD200	R134
BMW	700	F 700GS	12-	AGS299	AGD305	K70
BMW	800	F 800GS	07-13	AGS299	AGD306	K72
BMW	800	F 800GT	12-	AGS299	AGD305	K71
BMW	800	F 800R	06-13	AGS299	AGD306	K73
BMW	800	F 800S	05-10	AGS299	AGD305	K71
BMW	800	F 800ST	05-13	AGS299	AGD305	K71
BMW	850	R 850C		AGS12	AGD07	
BMW	850	R 850C		AGS13	AGD06	
BMW	900	R 900RT	09-12	AGS194	AGD305	K26
BMW	1000	HP4	12-	AGS293	AGD08	K42
BMW	1000	S 1000RR	09-	AGS293	AGD08	K46
BMW	1150	R 1150GS	01-	AGS12	AGD07	
BMW	1150	R 1150R	01-	AGS12	AGD07	
BMW	1150	R 1150R	01-	AGS13	AGD06	
BMW	1150	R 1150RT	01-	AGS12	AGD07	
BMW	1150	R 1150RT	01-	AGS13	AGD06	
BMW	1150	R 1150S	01-	AGS12	AGD07	
BMW	1200	HP2 Enduro	04-06	AGS298	AGD306	K25H
BMW	1200	HP2 Megamoto	06-08	AGS298	AGD306	K25H
BMW	1200	K 1200LT	01-	AGS12	AGD07	
BMW	1200	K 1200LT	01-	AGS13	AGD06	
BMW	1200	K 1200RS	01-	AGS12	AGD07	
BMW	1200	R 1200C	99-	AGS12	AGD07	
BMW	1200	R 1200C	99-	AGS13	AGD06	
BMW	1200	R 1200C Avantgarde	99-	AGS12	AGD07	
BMW	1200	R 1200C Avantgarde	99-	AGS13	AGD06	
BMW	1200	R 1200CL	99-	AGS12	AGD07	
BMW	1200	R 1200CL	99-	AGS13	AGD06	
BMW	1200	R 1200GS	03-13	AGS194	AGD305	K25
BMW	1200	R 1200GS Adventure	06-13	AGS194	AGD305	K255
BMW	1200	R 1200I		AGS12	AGD07	
BMW	1200	R 1200I		AGS13	AGD06	
BMW	1200	R 1200R	06-09	AGS194	AGD305	K27
BMW	1200	R 1200RT	-04	AGS12	AGD07	
BMW	1200	R 1200RT	08-12	AGS194	AGD305	K26
BMW	1200	R 1200S	05-06	AGS194	AGD305	K29
BMW	1200	R 1200ST	03-07	AGS194	AGD305	K28
BMW	1300	K 1300GT	08-10	AGS194	AGD305	K44
BMW	1300	K 1300R	08-13	AGS194	AGD305	K43
BMW	1300	K 1300S	08-13	AGS194	AGD305	K40
BUELL	1000	Firebolt XB9R		AGS46	AGD56	
BUELL	1000	Lightning XB9 CityX		AGS46	AGD56	
BUELL	1000	Lightning XB9S	04-07	AGS45	AGD01	
BUELL	1000	Lightning XB9SX		AGS46	AGD56	
BUELL	1200	Firebolt XB12R		AGS46	AGD56	
BUELL	1200	Firebolt XB9S	04-07	AGS45	AGD01	
BUELL	1200	Lightning XB12S	04-07	AGS45	AGD01	
BUELL	1200	Lightning XB12Scg	09-	AGS46	AGD56	
BUELL	1200	Lightning XB12Ss	09-	AGS46	AGD56	
BUELL	1200	Lightning XB12SX	09-	AGS46	AGD56	
BUELL	1200	Ulysses XB12X	09-	AGS46	AGD56	
BUELL	1200	Ulysses XB12XT	09-	AGS46	AGD56	
BULTACO	50	Astro	99	AGS31	AGD38	
BULTACO	50	Astro Réplica	00	AGS31	AGD38	
BULTACO	50	Aventura		AGDS602	AGDS602	
BULTACO	50	Campera		AGS31	AGD161	

LEVE / levers

INDICE ANALITICO LEVE / levers index

MARCA Brand	CC	MODELLO Model	ANNI Years	LEVA FRIZIONE Clutch Lever	LEVA FRENO Brake Lever	NOTE Notes
BULTACO	50	Lobito	98-01	AGS31	AGD38	
BULTACO		Varios Modelos		AGS100	AGD106	
CAGIVA	50	Mito	98-99	AGS56	AGD75	
CAGIVA	50	Progress AC	97-00	AGS56	AGD75	
CAGIVA	50	Progress LC	98-01	AGS56	AGD75	
CAGIVA	125	Mito Euro2/Euro3	04-07	AGS233	AGD182	
CAGIVA	125	Mito EV	94-03	AGS233	AGD182	
CAGIVA	125	Mito EV 6 Marce	99-00	AGS233	AGD182	
CAGIVA	125	Mito SP525	08-	AGS233	AGD182	
CAGIVA	125	Planet	98-03	AGS02	AGD181	
CAGIVA	125	Raptor	03-07	AGS02	AGD181	
CAGIVA	125	Raptor Euro2	06	AGS02	AGD181	
CAGIVA	125	Raptor Euro3	07-	AGS02	AGD181	
CAGIVA	125	Supercity	96-99	AGS02	AGD181	
CAGIVA	500	W16	94-98	AGS81	AGD182	
CAGIVA	650	Raptor	01-05	AGS02	AGD101	
CAGIVA	650	Raptor 650ie	06-07	AGS02	AGD101	
CAGIVA	650	V-Raptor	01-05	AGS02	AGD101	
CAGIVA	1000	Raptor	00-06	AGS02	AGD101	
CAGIVA	1000	V-Raptor	00-06	AGS02	AGD101	
CAGIVA	1000	Xtra-Raptor	00-06	AGS02	AGD101	
CPI	50	Aragon GP		AGS221	-	
CPI	50	Aragon S		AGDS620	-	
CPI	50	GTR		AGDS620	AGDS620	
CPI	50	GTR RR		AGDS620	AGDS620	
CPI	50	Oliver City		AGDS620	AGD230	
CPI	50	Oliver Sport		AGS221	AGD229	
CPI	50	SM		AGS231	AGD241	
CPI	50	SMX		AGS231	AGD241	
CPI	50	Supercross		AGS231	AGD241	
CPI	50	Supermoto		AGS231	AGD241	
CPI	125	Aragon GP		AGS221	-	
CPI	125	Aragon S		AGDS620	-	
CPI	125	Oliver City		AGDS620	AGD230	
DAELIM	50	GZ50G Tapo	07-	AGS61	AGD238	
DAELIM	50	Message	97-02	AGS61	AGD238	
DAELIM	50	SE Cordi	04-	AGS61	AGD238	
DAELIM	50	SJ50 S-Five	06-	AGS61	AGD238	
DAELIM	50	SJ50A E-Five	06-	AGS61	AGD238	
DAELIM	50	SJ50R A-Four	06-	AGS61	AGD238	
DAELIM	125	NS125 DLX	97-99	AGS267	AGD203	
DAELIM	125	S1	07-09	AGS226	AGD237	
DAELIM	125	S2	06-08	AGS226	AGD237	
DAELIM	125	S3	10-	AGS226	AGD237	
DAELIM	125	SG125L Otello	00-07	AGS267	AGD203	
DAELIM	125	SL125 History	01-08	AGS267	AGD203	
DAELIM	125	SQ	06-08	AGS226	AGD237	
DAELIM	125	VJ Roadwin	03-08	AGS266	AGD52	
DAELIM	125	VJ125FI Euro3	07-	AGS266	AGD52	
DAELIM	125	VJF Roadwin	07-	AGS266	AGD52	
DAELIM	125	VL125 Daystar	99-09	AGS209	AGD217	
DAELIM	125	VL125FI Daystar	07-	AGS209	AGD217	
DAELIM	125	VL125L Daystar	07-	AGS209	AGD217	
DAELIM	125	VS Custom	06-08	AGS209	AGD217	
DAELIM	125	VS Evolution	07-08	AGS209	AGD217	
DAELIM	250	S2	06-09	AGS226	AGD237	
DAELIM	250	S3	12-	AGS226	AGD237	
DAELIM	250	SQ	06-09	AGS226	AGD237	
DERBI	50	Antorcha 3 Vel.	73-	AGS101	AGD107	
DERBI	50	Antorcha 3 Vel.	73-	AGS106	AGD109	
DERBI	50	Atlantis	99-01	AGS205	AGDS602	

ACCOSSATO

LEVE / levers

INDICE ANALITICO LEVE / levers index

MARCA Brand	CC	MODELLO Model	ANNI Years	LEVA FRIZIONE Clutch Lever	LEVA FRENO Brake Lever	NOTE Notes
DERBI	50	Atlantis 2T	07-	AGDS602	AGDS602	
DERBI	50	Atlantis 4T	04-	AGDS602	AGDS602	
DERBI	50	Atlantis H2O	99-01	AGS205	AGDS602	
DERBI	50	Atlantis O2	02	AGS205	AGDS602	
DERBI	50	Atlantis O2 Bullet	03-06	AGDS602	AGDS602	
DERBI	50	Atlantis O2 City	03-06	AGDS602	AGDS602	
DERBI	50	Atlantis O2 Red Bullet	03	AGDS602	AGDS602	
DERBI	50	Atlantis O2 Two Chic	05	AGDS602	AGDS602	
DERBI	50	Boulevard 2T	09-	AGS71	AGDS616	Grimeca
DERBI	50	Boulevard 4T	09-	AGS71	AGDS616	Grimeca
DERBI	50	Boulevard 4T	09-	AGS71	AGDS611	Hengtong
DERBI	50	FDS	86-	AGS125	AGD111	**Nero** / Black
DERBI	50	FDS	86-	AGS126	AGD114	**Argento** /Silver
DERBI	50	FDS Savannah	86-	AGS31	AGD161	
DERBI	50	Fenix		AGS56	AGD100	
DERBI	50	Furax		AGDS602	AGDS602	
DERBI	50	GP1	01-03	AGDS600	AGDS600	
DERBI	50	GP1	05-	AGDS600	AGDS600	
DERBI	50	GP1 Open	05-	AGDS600	AGDS600	
DERBI	50	GP1 Race	05-	AGDS600	AGDS600	
DERBI	50	GPR 2T	10-	AGS45	AGDS600	
DERBI	50	GPR Nude	04-08	AGS45	AGD215	
DERBI	50	GPR Nude Sport	06	AGS45	AGD215	
DERBI	50	GPR Nude Tuning	06-08	AGS45	AGD215	
DERBI	50	GPR R	-03	AGS56	AGD75	
DERBI	50	GPR R	04-09	AGS45	AGD215	
DERBI	50	GPR R Repli. Racing	99-03	AGS56	AGD75	
DERBI	50	GPR R Replica	05-	AGS45	AGD215	
DERBI	50	Hunter	96-97	AGS56	AGDS632	
DERBI	50	Paddock	98-99	AGS56	AGDS632	
DERBI	50	Predator H2O	98-01	AGDS602	AGDS602	
DERBI	50	Predator O2	98-01	AGS56	AGDS602	
DERBI	50	RD		AGS107	AGD110	**Nero** / Black
DERBI	50	RD		AGS142	AGD120	**Argento** /Silver
DERBI	50	Senda	94-96	AGS31	AGDS625	
DERBI	50	Senda DRD		AGS56	AGD38	
DERBI	50	Senda Hyp DRD Evo	08-10	AGS55	AGD288	AJP
DERBI	50	Senda Hyp DRD Evo	11-	AGS55	AGD304	J.Juan
DERBI	50	Senda Hyp DRD Evo Ltd. Ed.	08	AGS91	AGD288	**Dx corta** / R short
DERBI	50	Senda Hyp DRD Evo Ltd. Ed.	08	AGS91	AGDS600	**Dx. lunga** / R long
DERBI	50	Senda L	94-96	AGS31	AGDS625	
DERBI	50	Senda R	94-01	AGS31	AGDS602	AJP
DERBI	50	Senda R	94-01	AGS31	AGDS625	
DERBI	50	Senda R DRD	02-03	AGS92	AGDS602	
DERBI	50	Senda R DRD Pro	05-10	AGS91	AGD288	**Dx corta** / R short
DERBI	50	Senda R DRD Pro	05-10	AGS91	AGDS600	**Dx. lunga** / R long
DERBI	50	Senda R DRD Pro	11-	AGS91	AGD304	J.Juan
DERBI	50	Senda R DRD Racing	04-08	AGS91	AGD37	
DERBI	50	Senda R Edition	00	AGS31	AGDS602	AJP
DERBI	50	Senda R Edition	00	AGS31	AGDS625	
DERBI	50	Senda R Race	03	AGS56	AGDS602	
DERBI	50	Senda R X-Race	04-09	AGS56	AGDS602	
DERBI	50	Senda R X-Trem	03-08	AGS56	AGDS602	
DERBI	50	Senda SM	00-01	AGS56	AGDS602	
DERBI	50	Senda SM DRD	02-03	AGS92	AGDS602	
DERBI	50	Senda SM DRD Pro	05-10	AGS91	AGD288	**Dx corta** / R short
DERBI	50	Senda SM DRD Pro	05-10	AGS91	AGDS600	**Dx. lunga** / R long
DERBI	50	Senda SM DRD Pro	11-	AGS91	AGD304	J.Juan
DERBI	50	Senda SM DRD Racing	04-08	AGS91	AGD37	
DERBI	50	Senda SM X-Race	04-09	AGS56	AGDS602	
DERBI	50	Senda SM X-Trem	02-08	AGS31	AGDS602	

LEVE / levers

INDICE ANALITICO LEVE / levers index

MARCA Brand	**CC**	**MODELLO** Model	**ANNI** Years	**LEVA FRIZIONE** Clutch Lever	**LEVA FRENO** Brake Lever	**NOTE** Notes
DERBI	**50**	**Sonar 2T**	**10-**	**AGDS611**	**AGDS611**	
DERBI	**50**	**Urban**		**AGS56**	**AGD135**	
DERBI	**50**	**Variant**		**AGDS601**	**AGDS601**	
DERBI	**50**	**Variant**		**AGS101**	**AGD107**	**Modelli vecchi** / old models
DERBI	**50**	**Variant**		**AGS106**	**AGD109**	**Modelli vecchi** / old models
DERBI	**50**	**Variant Box**	**98**	**AGDS601**	**AGDS601**	
DERBI	**50**	**Variant Sport**		**AGS56**	**AGD135**	
DERBI	**50**	**Variant Sport 2T**	**12-**	**AGDS611**	**AGDS605**	
DERBI	**50**	**Variant Sport R**	**96-98**	**AGS56**	**AGD100**	
DERBI	**50**	**Variant Start**		**AGS145**	**AGD145**	
DERBI	**50**	**Variant World Champion**		**AGS145**	**AGD145**	
DERBI	**100**	**Atlantis**	**00-01**	**AGS205**	**AGDS602**	
DERBI	**100**	**Atlantis 4T**	**04-06**	**AGDS602**	**AGDS602**	
DERBI	**100**	**Boulevard 4T**	**10-**	**AGS71**	**AGDS616**	**Grimeca**
DERBI	**100**	**Boulevard 4T**	**10-**	**AGS71**	**AGDS611**	**Hengtong**
DERBI	**125**	**Boulevard 4T**	**08-**	**AGS71**	**AGDS616**	**Grimeca**
DERBI	**125**	**Boulevard 4T**	**08-**	**AGS71**	**AGDS611**	**Hengtong**
DERBI	**125**	**GP1**	**06-**	**AGDS600**	**AGDS600**	
DERBI	**125**	**GP1 Low Seat**	**07-**	**AGDS600**	**AGDS600**	
DERBI	**125**	**GPR 125 Nude**	**04-09**	**AGS45**	**AGD215**	
DERBI	**125**	**GPR 125R**	**04-08**	**AGS45**	**AGD215**	
DERBI	**125**	**GPR 125R 4T-4V**	**09-**	**AGS45**	**AGDS600**	
DERBI	**125**	**GPR Nude Sport**	**04-**	**AGS45**	**AGD215**	
DERBI	**125**	**Rambla**	**08-**	**AGDS640**	**AGDS640**	**Grimeca**
DERBI	**125**	**Rambla**	**08-**	**AGDS608**	**AGDS608**	**Hengtong**
DERBI	**125**	**Senda R**	**04**	**AGS55**	**AGD37**	
DERBI	**125**	**Senda R 4T**	**04-07**	**AGS91**	**AGD37**	
DERBI	**125**	**Senda R 4T Baja**	**06-08**	**AGS91**	**AGD37**	
DERBI	**125**	**Senda SM**	**04**	**AGS55**	**AGD37**	
DERBI	**125**	**Senda SM 4T**	**04-07**	**AGS91**	**AGD37**	
DERBI	**125**	**Senda SM 4T Baja**	**06-08**	**AGS91**	**AGD37**	
DERBI	**125**	**Sonar 4T**	**10-**	**AGDS611**	**AGDS611**	
DERBI	**125**	**Terra 4T**	**07-**	**AGS91**	**AGDS600**	
DERBI	**125**	**Terra 4T Adventure**	**07-**	**AGS91**	**AGD288**	**AJP**
DERBI	**125**	**Variant Sport 4T**	**12-**	**AGDS611**	**AGDS605**	
DERBI	**250**	**GP1**	**06-07**	**AGDS600**	**AGDS600**	
DERBI	**250**	**GP1 Low Seat**	**07-**	**AGDS600**	**AGDS600**	
DERBI	**250**	**Rambla**	**08-**	**AGDS640**	**AGDS640**	**Grimeca**
DERBI	**250**	**Rambla**	**08-**	**AGDS608**	**AGDS608**	**Hengtong**
DERBI	**300**	**Rambla i.e.**	**10-**	**AGDS609**	**AGDS609**	
DUCATI	**400**	**Monster**	**00-04**	**AGDS621**	**AGDS621**	
DUCATI	**400**	**Monster**	**95-97**	**AGDS621**	**AGDS621**	
DUCATI	**400**	**Monster Dark i.e.**	**05**	**AGS224**	**AGDS621**	
DUCATI	**400**	**Monster i.e.**	**05-07**	**AGS224**	**AGDS621**	
DUCATI	**600**	**Monster**	**93-01**	**AGDS621**	**AGDS621**	
DUCATI	**600**	**Monster City**	**99**	**AGDS621**	**AGDS621**	
DUCATI	**600**	**Monster City Dark**	**99**	**AGDS621**	**AGDS621**	
DUCATI	**600**	**Monster Dark**	**98-99**	**AGDS621**	**AGDS621**	
DUCATI	**600**	**SS Doble disco**	**91-97**	**AGDS621**	**AGDS621**	
DUCATI	**600**	**SS Monodisco**	**91-97**	**AGDS621**	**AGDS621**	
DUCATI	**620**	**Monster Dark**	**05-06**	**AGS224**	**AGDS621**	
DUCATI	**620**	**Monster Dark Monodisc**	**05**	**AGS224**	**AGDS621**	
DUCATI	**620**	**Monster i.e.**	**02-03**	**AGDS621**	**AGDS621**	
DUCATI	**620**	**Monster i.e.**	**04-06**	**AGS224**	**AGDS621**	
DUCATI	**620**	**Multistrada**	**06**	**AGS224**	**AGDS621**	
DUCATI	**695**	**Monster**	**07**	**AGS224**	**AGDS621**	
DUCATI	**696**	**Monster**	**13**	**AGS282**	**AGD149**	**20th Anniversary**
DUCATI	**696**	**Monster**	**08-09**	**AGS224**	**AGDS621**	
DUCATI	**696**	**Monster**	**10-**	**AGS282**	**AGD149**	
DUCATI	**696**	**Monster +**	**08-09**	**AGS224**	**AGDS621**	
DUCATI	**696**	**Monster +**	**10-**	**AGS282**	**AGD149**	

ACCOSSATO

LEVE / levers

INDICE ANALITICO LEVE / levers index

MARCA Brand	CC	MODELLO Model	ANNI Years	LEVA FRIZIONE Clutch Lever	LEVA FRENO Brake Lever	NOTE Notes
DUCATI	748	Biposto	99-01	AGS201	AGD210	
DUCATI	748	R	99-02	AGS201	AGD210	
DUCATI	748	S	00-02	AGS201	AGD210	
DUCATI	748	Testabassa	99-02	AGS201	AGD210	
DUCATI	749	749	03-06	AGS199	AGD208	
DUCATI	749	Dark	04-06	AGS199	AGD208	
DUCATI	749	R	04-06	AGS199	AGD208	
DUCATI	749	S	03-06	AGS199	AGD208	
DUCATI	750	Monster City	99	AGDS621	AGDS621	
DUCATI	750	Monster City Dark	99	AGDS621	AGDS621	
DUCATI	750	Monster Doble disco	96-01	AGDS621	AGDS621	
DUCATI	750	Monster ie	02	AGDS621	AGDS621	
DUCATI	750	Monster Monodisco	96-01	AGDS621	AGDS621	
DUCATI	750	SS Doble disco	91-97	AGDS621	AGDS621	
DUCATI	750	Supersport	99	AGS201	AGD210	
DUCATI	750	Supersport	91-97	AGDS621	AGDS621	
DUCATI	750	Supersport ie	00-02	AGS201	AGD210	
DUCATI	796	Hypermotard	09-	AGS282	AGD149	
DUCATI	796	Monster	13	AGS282	AGD149	20th Anniversary
DUCATI	796	Monster	10-	AGS282	AGD149	
DUCATI	800	Monster	03-04	AGS224	AGDS621	
DUCATI	800	Monster S2R	05-07	AGS224	AGDS621	
DUCATI	800	Monster S2R Dark	05-06	AGS224	AGDS621	
DUCATI	848	848	08-	AGS199	AGD208	
DUCATI	848	EVO	10-	AGS200	AGD209	
DUCATI	848	EVO Corse SE	12-	AGS199	AGD208	
DUCATI	848	Streetfighter	12-	AGS200	AGD209	
DUCATI	851	SBK Biposto	91-92	AGDS621	AGDS621	
DUCATI	888	SBK Strada	94-95	AGDS621	AGDS621	
DUCATI	888	SP5	93	AGDS621	AGDS621	
DUCATI	900	Monster	93-97	AGDS621	AGDS621	
DUCATI	900	Monster ie	00-01	AGS201	AGD210	
DUCATI	900	Sport	02	AGS201	AGD210	
DUCATI	900	Superlight	91-97	AGDS621	AGDS621	
DUCATI	900	Supersport	91-97	AGDS621	AGDS621	
DUCATI	900	Supersport	98-99	AGS201	AGD210	
DUCATI	900	Supersport ie	00-02	AGS201	AGD210	
DUCATI	916	Monster S4	01-02	AGS201	AGD210	
DUCATI	916	Monster S4 Foggy	02	AGS201	AGD210	
DUCATI	916	ST4	99-03	AGDS621	AGDS621	
DUCATI	944	ST2	97-03	AGDS621	AGDS621	
DUCATI	996	996	99-01	AGS201	AGD210	
DUCATI	996	R	01	AGS201	AGD210	
DUCATI	996	S	01	AGS201	AGD210	
DUCATI	996	Special USA	99	AGS201	AGD210	
DUCATI	996	SPS	99-00	AGS201	AGD210	
DUCATI	996	ST4S	01-05	AGDS621	AGDS621	
DUCATI	998	998	02	AGS201	AGD210	
DUCATI	998	Matrix	04	AGS201	AGD210	
DUCATI	998	R	02	AGS201	AGD210	
DUCATI	998	S Bayliss	02	AGS201	AGD210	
DUCATI	999	999	03-06	AGS199	AGD208	
DUCATI	999	R	03-06	AGS199	AGD208	
DUCATI	999	S	03-06	AGS199	AGD208	
DUCATI	999	S Final Edition	04	AGS201	AGD210	
DUCATI	1000	GT	06-10	AGS201	AGD210	
DUCATI	1000	GT Touring	09-	AGS201	AGD210	
DUCATI	1000	Monster	03-05	AGS201	AGD210	
DUCATI	1000	Monster S	05	AGS201	AGD210	
DUCATI	1000	Monster S2R	06-07	AGS201	AGD210	
DUCATI	1000	Monster S4R	05-06	AGS201	AGD210	

LEVE / levers

INDICE ANALITICO LEVE / levers index

MARCA Brand	CC	MODELLO Model	ANNI Years	LEVA FRIZIONE Clutch Lever	LEVA FRENO Brake Lever	NOTE Notes
DUCATI	1000	Monster S4R	07-	AGS199	AGD208	
DUCATI	1000	Monster S4RS	06-	AGS199	AGD208	
DUCATI	1000	Multistrada	03-06	AGS201	AGD210	
DUCATI	1000	Multistrada DS/ DS S	05	AGS201	AGD210	
DUCATI	1000	Multistrada S	06	AGS201	AGD210	
DUCATI	1000	Paul Smart L.E.	06	AGS201	AGD210	
DUCATI	1000	Sport	07-09	AGS201	AGD210	
DUCATI	1000	Sport S	07-09	AGS201	AGD210	
DUCATI	1000	ST3	05-07	AGS201	AGD210	
DUCATI	1000	ST3S	06-07	AGS201	AGD210	
DUCATI	1000	Supersport	03	AGS201	AGD210	
DUCATI	1098	1098	07-09	AGS200	AGD209	
DUCATI	1098	R	08-09	AGS200	AGD209	
DUCATI	1098	R Ltd. Edition Bayliss	09	AGS200	AGD209	
DUCATI	1098	S	07-09	AGS200	AGD209	
DUCATI	1098	S Tricolore	07-08	AGS200	AGD209	
DUCATI	1098	Streetfighter	10-15	AGS200	AGD209	
DUCATI	1098	Streetfighter S	10-15	AGS200	AGD209	
DUCATI	1100	Hypermotard	08-	AGS289	AGD178	
DUCATI	1100	Hypermotard EVO	10-	AGS289	AGD178	
DUCATI	1100	Hypermotard EVO SP	10-	AGS289	AGD178	
DUCATI	1100	Hypermotard S	08-	AGS289	AGD178	
DUCATI	1100	Monster	09-	AGS199	AGD208	
DUCATI	1100	Monster Diesel	13-	AGS199	AGD208	
DUCATI	1100	Monster EVO	13	AGS199	AGD208	20th Anniversary
DUCATI	1100	Monster EVO	11-	AGS199	AGD208	Brembo
DUCATI	1100	Monster S	09-	AGS199	AGD208	
DUCATI	1198	1198	09-11	AGS200	AGD209	
DUCATI	1198	Diavel	11-15	AGS200	AGD209	Brembo
DUCATI	1198	Diavel AMG	13-15	AGS200	AGD209	
DUCATI	1198	Diavel Carbon	11-15	AGS200	AGD209	Brembo
DUCATI	1198	Diavel Cromo	13-15	AGS200	AGD209	
DUCATI	1198	Diavel Strada	13-15	AGS200	AGD209	
DUCATI	1198	Diavel White Stripe	13-14	AGS200	AGD209	
DUCATI	1198	R Corse	10-11	AGS200	AGD209	
DUCATI	1198	S	09-11	AGS200	AGD209	
DUCATI	1198	S Corse	10-11	AGS200	AGD209	
DUCATI	1198	SP	11	AGS200	AGD209	Brembo
DUCATI	1200	Monster	14-15	AGS200	AGD209	
DUCATI	1200	Multistrada	10-14	AGS200	AGD209	
DUCATI	1200	Multistrada ABS	10-14	AGS200	AGD209	
DUCATI	1200	Multistrada S	13-14	AGS200	AGD209	Pikes Peak Edition
DUCATI	1200	Multistrada S ABS	10-14	AGS200	AGD209	
DUCATI	1200	Multistrada S Sport	11-14	AGS200	AGD209	
DUCATI	1200	Multistrada Touring	10-14	AGS200	AGD209	
GAS GAS	50	EC Rookie	01-02	AGDS602	AGDS602	
GAS GAS	125	EC 2T	02-09	AGS170	AGD93	**Sx lunga Dx corta** / L long R short
GAS GAS	125	EC 2T	02-09	AGS168	AGD93	**Sx+Dx corta** / L+R short
GAS GAS	125	Halley EH 2T	09-	AGS170	AGD93	**Sx lunga Dx corta** / L long R short
GAS GAS	125	Halley EH 2T	09-	AGS168	AGD93	**Sx+Dx corta** / L+R short
GAS GAS	125	Halley SM 2T	09-	AGS170	AGD93	**Sx lunga Dx corta** / L long R short
GAS GAS	125	Halley SM 2T	09-	AGS168	AGD93	**Sx+Dx corta** / L+R short
GAS GAS	125	MC 2T	02-09	AGS170	AGD93	**Sx lunga Dx corta** / L long R short
GAS GAS	125	MC 2T	02-09	AGS168	AGD93	**Sx+Dx corta** / L+R short
GAS GAS	125	MX 2T	02-09	AGS170	AGD93	**Sx lunga Dx corta** / L long R short
GAS GAS	125	MX 2T	02-09	AGS168	AGD93	**Sx+Dx corta** / L+R short
GAS GAS	125	Pampera	02-05	AGDS632	AGDS602	
GAS GAS	125	SM 2T	02-07	AGS170	AGD93	**Sx lunga Dx corta** / L long R short
GAS GAS	125	SM 2T	02-07	AGS168	AGD93	**Sx+Dx corta** / L+R short
GAS GAS	125	TXT	00-01	AGS168	AGD173	**Sx. corta, Dx. lunga** / L short, R long
GAS GAS	125	TXT	00-01	AGS170	AGD37	**Sx lunga Dx corta** / L long R short

ACCOSSATO

LEVE / levers

INDICE ANALITICO LEVE / levers index

MARCA Brand	CC	MODELLO Model	ANNI Years	LEVA FRIZIONE Clutch Lever	LEVA FRENO Brake Lever	NOTE Notes
GAS GAS	125	TXT PRO		AGS192	AGD37	
GAS GAS	125	TXT PRO		AGS192	AGD173	**Sx forg. Dx lunga** / L forged R long
GAS GAS	200	EC 2T	01	AGS170	AGD93	**Sx lunga Dx corta** / L long R short
GAS GAS	200	EC 2T	01	AGS168	AGD93	**Sx+Dx corta** / L+R short
GAS GAS	200	EC 2T	02-09	AGS170	AGD93	**Sx lunga Dx corta** / L long R short
GAS GAS	200	EC 2T	02-09	AGS168	AGD93	**Sx+Dx corta** / L+R short
GAS GAS	200	MC 2T	02-09	AGS170	AGD93	**Sx lunga Dx corta** / L long R short
GAS GAS	200	MC 2T	02-09	AGS168	AGD93	**Sx+Dx corta** / L+R short
GAS GAS	200	MX 2T	02-07	AGS170	AGD93	**Sx lunga Dx corta** / L long R short
GAS GAS	200	MX 2T	02-07	AGS168	AGD93	**Sx+Dx corta** / L+R short
GAS GAS	200	SM 2T	02-07	AGS170	AGD93	**Sx lunga Dx corta** / L long R short
GAS GAS	200	SM 2T	02-07	AGS168	AGD93	**Sx+Dx corta** / L+R short
GAS GAS	200	TXT	00-01	AGS168	AGD173	**Sx. corta, Dx. lunga** /L short, R long
GAS GAS	200	TXT	00-01	AGS170	AGD37	**Sx lunga Dx corta** / L long R short
GAS GAS	200	TXT Pro		AGS192	AGD37	**Sx forg. Dx corta** / L forged R short
GAS GAS	200	TXT Pro		AGS192	AGD173	**Sx forg. Dx lunga** / L forged R long
GAS GAS	250	EC 2T	01	AGS170	AGD93	**Sx lunga Dx corta** / L long R short
GAS GAS	250	EC 2T	01	AGS168	AGD93	**Sx+Dx corta** / L+R short
GAS GAS	250	EC 2T	12-13	AGS17	AGD93	
GAS GAS	250	EC 2T	02-09	AGS170	AGD93	**Sx lunga Dx corta** / L long R short
GAS GAS	250	EC 2T	02-09	AGS168	AGD93	**Sx+Dx corta** / L+R short
GAS GAS	250	EC 2T Racing	12-13	AGS17	AGD93	
GAS GAS	250	EC 2T Repl. Cervantes Nambotin	11	AGS17	AGD93	
GAS GAS	250	EC E 2T	12-13	AGS17	AGD93	
GAS GAS	250	EC Replica Giullaume	12	AGS17	AGD93	
GAS GAS	250	MC 2T	02-09	AGS170	AGD93	**Sx lunga Dx corta** / L long R short
GAS GAS	250	MC 2T	02-09	AGS168	AGD93	**Sx+Dx corta** / L+R short
GAS GAS	250	MX 2T	02-07	AGS170	AGD93	**Sx lunga Dx corta** / L long R short
GAS GAS	250	MX 2T	02-07	AGS168	AGD93	**Sx+Dx corta** / L+R short
GAS GAS	250	Pampera	02-05	AGDS632	AGDS602	
GAS GAS	250	SM 2T	02-07	AGS170	AGD93	**Sx lunga Dx corta** / L long R short
GAS GAS	250	SM 2T	02-07	AGS168	AGD93	**Sx+Dx corta** / L+R short
GAS GAS	250	TXT	00-01	AGS168	AGD173	**Sx. corta, Dx. lunga** /L short, R long
GAS GAS	250	TXT	00-01	AGS170	AGD37	**Sx lunga Dx corta** / L long R short
GAS GAS	250	TXT Pro		AGS192	AGD37	**Sx forg. Dx corta** / L forged R short
GAS GAS	250	TXT Pro		AGS192	AGD173	**Sx forg. Dx lunga** / L forged R long
GAS GAS	280	Pampera	02-05	AGDS632	AGDS602	
GAS GAS	280	TXT	00-01	AGS168	AGD173	**Sx. corta, Dx. lunga** / L short, R long
GAS GAS	280	TXT	00-01	AGS170	AGD37	**Sx lunga Dx corta** / L long R short
GAS GAS	280	TXT Pro	-02	AGS192	AGD37	**Sx forg. Dx corta** / L forged R short
GAS GAS	280	TXT Pro	-02	AGS192	AGD173	**Sx forg. Dx lunga** / L forged R long
GAS GAS	280	TXT Pro	03-	AGDS622	AGD173	
GAS GAS	300	EC 2T	01	AGS170	AGD93	**Sx lunga Dx corta** / L long R short
GAS GAS	300	EC 2T	01	AGS168	AGD93	**Sx+Dx corta** / L+R short
GAS GAS	300	EC 2T	12-13	AGS17	AGD93	
GAS GAS	300	EC 2T	02-09	AGS170	AGD93	**Sx lunga Dx corta** / L long R short
GAS GAS	300	EC 2T	02-09	AGS168	AGD93	**Sx+Dx corta** / L+R short
GAS GAS	300	EC 2T Racing	12-13	AGS17	AGD93	
GAS GAS	300	EC 2T Repl. Cervantes Nambotin	11	AGS17	AGD93	
GAS GAS	300	EC 4T	13-	AGS17	AGD93	
GAS GAS	300	EC E 2T	12-13	AGS17	AGD93	
GAS GAS	300	EC Replica Giullaume	12	AGS17	AGD93	
GAS GAS	300	MC 2T	02-09	AGS170	AGD93	**Sx lunga Dx corta** / L long R short
GAS GAS	300	MC 2T	02-09	AGS168	AGD93	**Sx+Dx corta** / L+R short
GAS GAS	300	MX 2T	02-09	AGS170	AGD93	**Sx lunga Dx corta** / L long R short
GAS GAS	300	MX 2T	02-09	AGS168	AGD93	**Sx+Dx corta** / L+R short
GAS GAS	300	SM 2T	02-09	AGS170	AGD93	**Sx lunga Dx corta** / L long R short
GAS GAS	300	SM 2T	02-09	AGS168	AGD93	**Sx+Dx corta** / L+R short
GAS GAS	300	TXT Pro	-02	AGDS622	AGD173	
GAS GAS	300	TXT Pro	02	AGS192	AGD37	**Sx forg. Dx corta** / L forged R short
GAS GAS	300	TXT Pro	02	AGS192	AGD173	**Sx forg. Dx lunga** / L forged R long

LEVE / levers

INDICE ANALITICO LEVE / levers index

ACCOSSATO

MARCA Brand	**CC**	**MODELLO** Model	**ANNI** Years	**LEVA FRIZIONE** Clutch Lever	**LEVA FRENO** Brake Lever	**NOTE** Notes
GAS GAS	**320**	**TXT**	**00-01**	**AGS168**	**AGD173**	**Sx. corta, Dx. lunga** /L short, R long
GAS GAS	**320**	**TXT**	**00-01**	**AGS170**	**AGD37**	**Sx lunga Dx corta** / L long R short
GAS GAS	**400**	**FSE**	**03-09**	**AGS170**	**AGD93**	**Sx lunga Dx corta** / L long R short
GAS GAS	**400**	**FSE**	**03-09**	**AGS168**	**AGD93**	**Sx+Dx corta** / L+R short
GAS GAS	**450**	**EC 4T**	**09-**	**AGS170**	**AGD93**	**Sx lunga Dx corta** / L long R short
GAS GAS	**450**	**EC 4T**	**09-**	**AGS168**	**AGD93**	**Sx+Dx corta** / L+R short
GAS GAS	**450**	**EC 4T Repl. Cervantes**	**13**	**AGS17**	**AGD93**	
GAS GAS	**450**	**FSE**	**03-07**	**AGS170**	**AGD93**	**Sx lunga Dx corta** / L long R short
GAS GAS	**450**	**FSE**	**03-07**	**AGS168**	**AGD93**	**Sx+Dx corta** / L+R short
GAS GAS	**450**	**FSR EC**	**08-**	**AGS170**	**AGD93**	**Sx lunga Dx corta** / L long R short
GAS GAS	**450**	**FSR EC**	**08-**	**AGS168**	**AGD93**	**Sx+Dx corta** / L+R short
GAS GAS	**450**	**FSR SM**	**08-**	**AGS170**	**AGD93**	**Sx lunga Dx corta** / L long R short
GAS GAS	**450**	**FSR SM**	**08-**	**AGS168**	**AGD93**	**Sx+Dx corta** / L+R short
GAS GAS	**450**	**Pampera**	**07-08**	**AGS170**	**AGD93**	**Sx lunga Dx corta** / L long R short
GAS GAS	**450**	**Pampera**	**07-08**	**AGS168**	**AGD93**	**Sx+Dx corta** / L+R short
GAS GAS	**450**	**Wild HP**	**04-06**	**AGS170**	**AGD93**	**Sx lunga Dx corta** / L long R short
GAS GAS	**450**	**Wild HP**	**04-06**	**AGS168**	**AGD93**	**Sx+Dx corta** / L+R short
GAS GAS	**515**	**EC 4T**	**09-**	**AGS170**	**AGD93**	**Sx lunga Dx corta** / L long R short
GAS GAS	**515**	**EC 4T**	**09-**	**AGS168**	**AGD93**	**Sx+Dx corta** / L+R short
GAS GAS	**-**	**Magura Hydraulic Clutch**	**11-**	**AGS17**	**-**	**Forgiata** / Forged
GAS GAS	**-**	**Trial/ Campo**		**AGS168**	**AGD37**	**Sx+Dx corta** / L+R short
GAS GAS	**-**	**Trial/ Campo**		**AGS169**	**AGD38**	**Sx+Dx corta** / L+R short
GAS GAS	**-**	**Trial/ Campo**		**AGS170**	**AGD173**	**Sx+Dx lunga** / L+R long
GAS GAS	**-**	**Trial/ Campo**		**AGS171**	**AGD174**	**Sx+Dx lunga** / L+R long
GAS GAS	**-**	**Trial/ Campo**		**AGS192**	**AGD151**	**Sx+Dx standard** /L+R standard
GENERIC	**50**	**Cracker**		**AGS228**	**AGD242**	
GENERIC	**50**	**Ideo**		**AGS228**	**AGD242**	
GENERIC	**50**	**Race**		**AGS228**	**AGD242**	
GENERIC	**50**	**Trigger SM**	**07-**	**AGS147**	**AGD46**	
GENERIC	**50**	**Trigger SM Competition**		**AGS147**	**AGD46**	
GENERIC	**50**	**Trigger X**	**07-**	**AGS147**	**AGD46**	
GENERIC	**50**	**Trigger X Competition**		**AGS147**	**AGD46**	
GENERIC	**50**	**Xor**		**AGS228**	**AGD242**	
GENERIC	**50**	**Xor Competition**		**AGS228**	**AGD242**	
GENERIC	**50**	**Xor Stroke**		**AGS228**	**AGD242**	
GENERIC	**50**	**Xor Williams F1**		**AGS228**	**AGD242**	
GENERIC	**125**	**Xor**		**AGS228**	**AGD242**	
GENERIC	**125**	**Xor Stroke**		**AGS228**	**AGD242**	
GENERIC	**125**	**Xor Williams F1**		**AGS228**	**AGD242**	
GILERA	**50**	**DNA**	**00-07**	**AGDS606**	**AGDS606**	**Grimeca**
GILERA	**50**	**DNA**	**00-07**	**AGDS610**	**AGDS610**	**Grimeca** /Brembo
GILERA	**50**	**DNA**	**00-07**	**AGDS610**	**AGDS610**	**Hengtong**
GILERA	**50**	**DNA GP Experience**	**03-04**	**AGDS610**	**AGDS610**	**Grimeca** /Brembo
GILERA	**50**	**DNA GP Experience**	**03-04**	**AGDS610**	**AGDS610**	**Hengtong**
GILERA	**50**	**Eaglet Automatico**	**96-97**	**AGS81**	**AGD46**	
GILERA	**50**	**Easy Moving**		**AGS41**	**AGD67**	
GILERA	**50**	**GSM**	**99-01**	**AGS31**	**AGD161**	
GILERA	**50**	**H@k**		**AGS31**	**AGD161**	
GILERA	**50**	**Ice**	**01-05**	**AGS129**	**AGDS606**	
GILERA	**50**	**RCR**	**03-07**	**AGS56**	**AGDS602**	
GILERA	**50**	**RCR**	**11-**	**AGS55**	**-**	
GILERA	**50**	**RK Cannibal**	**96-98**	**AGS31**	**AGD161**	
GILERA	**50**	**Runner**	**97-00**	**AGDS612**	**AGDS612**	
GILERA	**50**	**Runner**		**AGS72**	**AGD115**	**Disco-Tamburo** / Disc-Drum
GILERA	**50**	**Runner Poggiali**	**02**	**AGDS612**	**AGDS612**	
GILERA	**50**	**Runner Purejet**	**02-04**	**AGDS611**	**AGDS611**	
GILERA	**50**	**Runner Purejet**	**02-04**	**AGDS612**	**AGDS612**	
GILERA	**50**	**Runner Purejet**	**05-06**	**AGDS616**	**AGDS616**	
GILERA	**50**	**Runner Purejet**	**07-**	**AGDS611**	**AGDS611**	**Hengtong**
GILERA	**50**	**Runner Purejet ST**	**08-**	**AGDS616**	**AGDS616**	
GILERA	**50**	**Runner SP**	**07**	**AGDS611**	**AGDS611**	

ACCOSSATO

LEVE / levers

INDICE ANALITICO LEVE / levers index

MARCA Brand	CC	MODELLO Model	ANNI Years	LEVA FRIZIONE Clutch Lever	LEVA FRENO Brake Lever	NOTE Notes
GILERA	50	Runner SP	02-04	AGDS612	AGDS612	
GILERA	50	Runner SP	05-06	AGDS611	AGDS611	
GILERA	50	Runner SP 50ST	08-	AGDS616	AGDS616	
GILERA	50	Runner SP Simoncelli	08-	AGDS616	AGDS616	
GILERA	50	Runner SP Special Ed.	07	AGDS611	AGDS611	Hengtong
GILERA	50	SMT	03-07	AGS56	AGDS602	
GILERA	50	SMT Racing	11-	AGS55	-	
GILERA	50	Stalker	05-06	AGS72	AGDS612	
GILERA	50	Stalker	07-08	AGS72	AGDS612	
GILERA	50	Stalker	09-	AGS72	AGD115	
GILERA	50	Stalker	97-04	AGDS612	AGDS612	Disco-Disco
GILERA	50	Stalker	97-04	AGS72	AGDS612	Disco-Tamburo / Disc-Drum
GILERA	50	Stalker Naked	08-	AGS129	AGDS610	
GILERA	50	Stalker Special Ed.	07-08	AGS72	AGD115	
GILERA	50	Storm Euro2	07-	AGDS611	AGDS611	
GILERA	50	TT Surfer		AGS31	AGD161	
GILERA	50	Twin		AGS31	AGD153	
GILERA	50	Typhoon	94-97	AGS41	AGD156	
GILERA	50	Typhoon X	98-99	AGS41	AGD156	
GILERA	50	Typhoon XR	00	AGS41	AGD156	
GILERA	50	Zulu	01	AGS31	AGD161	
GILERA	125	DNA	01	AGDS606	AGDS606	
GILERA	125	Nexus ie Euro3	07	AGDS610	AGDS610	
GILERA	125	Nexus ie Euro3	08	AGDS610	AGDS610	
GILERA	125	Nexus ie Euro3	09-	AGDS610	AGDS610	
GILERA	125	Runner FX	97-02	AGDS611	AGDS611	
GILERA	125	Runner FX	97-02	AGDS612	AGDS612	
GILERA	125	Runner VX	02-04	AGDS611	AGDS611	
GILERA	125	Runner VX	02-04	AGDS612	AGDS612	
GILERA	125	Runner VX	05-06	AGDS611	AGDS611	
GILERA	125	Runner VX	00-01	AGDS611	AGDS611	
GILERA	125	Runner VX	00-01	AGDS612	AGDS612	
GILERA	125	Runner VX Euro3	07-	AGDS616	AGDS616	Grimeca
GILERA	125	Runner VX Race	06	AGDS611	AGDS611	
GILERA	125	Runner VX SC	06-07	AGDS611	AGDS611	
GILERA	125	Runner VX ST	08-	AGDS616	AGDS616	Grimeca
GILERA	125	SC	06-	AGS45	AGD215	
GILERA	125	Typhoon	95-98	AGS72	AGD148	
GILERA	125	Typhoon X	99-00	AGS72	AGD148	
GILERA	125	Typhoon XR	99-00	AGS72	AGD148	
GILERA	180	DNA	01	AGDS606	AGDS606	
GILERA	180	Runner FXR	97-02	AGDS611	AGDS611	
GILERA	180	Runner FXR	97-02	AGDS612	AGDS612	
GILERA	180	Runner VXR	00-01	AGDS611	AGDS611	
GILERA	180	Runner VXR	00-01	AGDS612	AGDS612	
GILERA	200	Runner VXR	07	AGDS611	AGDS611	
GILERA	200	Runner VXR	02-04	AGDS611	AGDS611	
GILERA	200	Runner VXR	02-04	AGDS612	AGDS612	
GILERA	200	Runner VXR	05-06	AGDS611	AGDS611	
GILERA	200	Runner VXR	08-	AGDS611	AGDS611	Hengtong
GILERA	200	Runner VXR Race	06	AGDS611	AGDS611	
GILERA	200	Runner VXR ST	08-09	AGDS616	AGDS616	Grimeca
GILERA	250	Nexus Euro3	06-07	AGDS610	AGDS610	
GILERA	250	Nexus SP	06-07	AGDS610	AGDS610	
GILERA	300	Nexus Euro3	08-	AGDS610	AGDS610	
GILERA	500	Fuoco	07-	AGDS610	AGDS606	
GILERA	500	Nexus	03-05	AGDS606	AGDS606	
GILERA	500	Nexus Euro3/SP	06-	AGDS606	AGDS606	
GILERA	600	RC	89-90	AGS31	-	
GILERA	600	RC Cobra	91-93	AGS31	-	
GILERA	800	GP	08-09	AGS288	AGD149	

LEVE / levers

INDICE ANALITICO LEVE / levers index

MARCA Brand	CC	MODELLO Model	ANNI Years	LEVA FRIZIONE Clutch Lever	LEVA FRENO Brake Lever	NOTE Notes
GILERA	800	GP	10-	AGS16	AGD13	
GILERA	800	GP Centenario	09	AGS16	AGD13	
HARLEY	883	Sporster® XL 883L SuperLow		AGS186	AGD15	
HARLEY	883	Sporster® XL 883N Iron		AGS186	AGD15	
HARLEY	883	Sporster® XL 883R		AGS186	AGD15	
HARLEY	1200	Sporster® XL N		AGS186	AGD15	
HARLEY	1200	Sporster® XL Nighster		AGS186	AGD15	
HARLEY	1200	Sporster® XL X Forty-Eight		AGS186	AGD15	
HARLEY	1200	Sporster® XR		AGS186	AGD15	
HARLEY	1200	Sporster® XR X		AGS186	AGD15	
HARLEY	1584	Dyna® FXDB Street Bob		AGS236	AGD157	
HARLEY	1584	Dyna® FXDC Super Glide Custom		-	AGD157	
HARLEY	1584	Dyna® FXDF Fat Bob		-	AGD157	
HARLEY	1584	Dyna® FXDWG Wide Glide		-	AGD157	
HARLEY	1584	Softail® FLSTF Fat Boy		-	AGD157	
HARLEY	1584	Softail® FLSTFB Fat Boy Special		-	AGD157	
HARLEY	1584	Softail® FLSTN Deluxe		AGS236	AGD157	
HARLEY	1584	Softail® FLSTSB Cross Bones		AGS236	AGD157	
HARLEY	1584	Softail® FXCWC Rocker C		AGS236	AGD157	
HARLEY	-	Modelos 82-92		AGS237	AGD251	
HARLEY	-	Modelos 92-96		AGS236	AGD159	
HARLEY	-	Modelos 96-		AGS236	AGD157	
HM	50	CRE Baja	07-10	AGS30	AGD288	AJP
HM	50	CRE Baja	11-	AGS30	AGD304	J.Juan
HM	50	CRE Baja	95-00	AGS30	-	
HM	50	CRE Baja RR	07-10	AGS30	AGD288	AJP
HM	50	CRE Baja RR	11-	AGS30	AGD304	J.Juan
HM	50	CRE Derapage	07-10	AGS30	AGD288	AJP
HM	50	CRE Derapage	11-	AGS30	AGD304	J.Juan
HM	50	CRE Derapage	95-00	AGS30	-	
HM	50	CRE Derapage RR	07-10	AGS30	AGD288	AJP
HM	50	CRE Derapage RR	11-	AGS30	AGD304	J.Juan
HM	50	CRE Six	01-05	AGS30	AGD288	**Dx corta** / R short
HM	50	CRE Six	01-05	AGS30	AGDS600	**Dx. lunga** / R long
HM	50	CRE Six	07-10	AGS30	AGD288	AJP
HM	50	CRE Six	11-	AGS30	AGD304	J.Juan
HM	50	CRE Six	95-00	AGS30	-	
HM	50	CRE Six Baja	06	AGS30	AGD288	AJP
HM	50	CRE Six Baja	01-05	AGS30	AGD288	**Dx corta** / R short
HM	50	CRE Six Baja	01-05	AGS30	AGDS600	**Dx. lunga** / R long
HM	50	CRE Six Derapage	06	AGS30	AGD288	AJP
HM	50	CRE Six Derapage	01-05	AGS30	AGD288	**Dx corta** / R short
HM	50	CRE Six Derapage	01-05	AGS30	AGDS600	**Dx. lunga** / R long
HM	50	CRE Six Derapage Competition	07-10	AGS30	AGD288	AJP
HM	50	CRE Six Derapage Competition	11-	AGS30	AGD304	J.Juan
HM	50	CRM Derapage Competititon	11-	AGS17	AGD14	
HM	125	City	11-	AGS30	AGD304	J.Juan
HM	125	CRE	04	AGS11	AGD93	**Dx+Sx forg.** / R+L forged
HM	125	CRE	02-04	AGS74	AGD93	**Dx+Sx forg.** / R+L forged
HM	125	CRE Baja 4T	12-	AGS30	AGD304	J.Juan
HM	125	CRE F125X	08-10	AGS30	AGD288	AJP
HM	125	CRE F125X	11-	AGS30	AGD304	J.Juan
HM	125	CRE Motard	02-04	AGS74	AGD93	**Dx+Sx forg.** / R+L forged
HM	125	CRE Motard 125	04	AGS11	AGD93	**Dx+Sx forg.** / R+L forged
HM	125	CRE R	05-08	AGS11	AGD93	**Dx+Sx forg.** / R+L forged
HM	125	CRM Derapage 4T	12-	AGS30	AGD304	J.Juan
HM	125	CRM Derapage RR 4T	12-	AGS30	AGD304	J.Juan
HM	125	CRM F125X	08-10	AGS30	AGD288	AJP
HM	125	CRM F125X	11-	AGS30	AGD304	J.Juan
HM	125	CRM R	05-08	AGS11	AGD93	**Dx+Sx forg.** / R+L forged
HM	125	Locusta	12-	AGS30	AGD304	J.Juan

ACCOSSATO

LEVE / levers

INDICE ANALITICO LEVE / levers index

MARCA Brand	CC	MODELLO Model	ANNI Years	LEVA FRIZIONE Clutch Lever	LEVA FRENO Brake Lever	NOTE Notes
HM	200	City	11-	AGS30	AGD304	J.Juan
HM	200	Locusta	12-	AGS30	AGD304	J.Juan
HM	230	Enduro F	04-07	AGS196	AGD93	Dx+Sx forg. / R+L forged
HM	230	Motard F	04-07	AGS196	AGD93	Dx+Sx forg. / R+L forged
HM	230	Trail F	04-07	AGS196	AGD93	Dx+Sx forg. / R+L forged
HM	230	Trail F ID	04-07	AGS196	AGD93	Dx+Sx forg. / R+L forged
HM	250	CRE 2T	04	AGS11	AGD93	Dx+Sx forg. / R+L forged
HM	250	CRE 2T	02-04	AGS74	AGD93	Dx forgiata / R forged
HM	250	CRE 4T	04	AGS11	AGD93	Dx+Sx forg. / R+L forged
HM	250	CRE F250R	05-07	AGS271	AGD93	Dx forgiata / R forged
HM	250	CRE F250R	05-07	AGS272	AGD93	Dx+Sx forg. / R+L forged
HM	250	CRE F250X	04-	AGS11	AGD93	Dx+Sx forg. / R+L forged
HM	250	CRE ie	07-08	AGS11	AGD93	Dx+Sx forg. / R+L forged
HM	250	CRE Motard 2T	04	AGS11	AGD93	Dx+Sx forg. / R+L forged
HM	250	CRE Motard 2T	02-04	AGS74	AGD93	Dx forgiata / R forged
HM	250	CRE Motard 4T	04	AGS11	AGD93	Dx+Sx forg. / R+L forged
HM	250	CRE R	05-08	AGS11	AGD93	Dx+Sx forg. / R+L forged
HM	250	CRM ie	07-08	AGS11	AGD93	Dx+Sx forg. / R+L forged
HM	250	CRM R	05-08	AGS11	AGD93	Dx+Sx forg. / R+L forged
HM	290	CRE ie	07-08	AGS11	AGD93	Dx+Sx forg. / R+L forged
HM	290	CRM ie	07-08	AGS11	AGD93	Dx+Sx forg. / R+L forged
HM	300	CRE F300X	04-	AGS11	AGD93	Dx+Sx forg. / R+L forged
HM	450	CRE	04	AGS11	AGD93	Dx+Sx forg. / R+L forged
HM	450	CRE	02-04	AGS74	AGD93	Dx forgiata / R forged
HM	450	CRE F450ie R	09-	AGS271	AGD93	Dx forgiata / R forged
HM	450	CRE F450ie R	09-	AGS272	AGD93	Dx+Sx forg. / R+L forged
HM	450	CRE F450R	05-08	AGS11	AGD93	Dx+Sx forg. / R+L forged
HM	450	CRE Motard	04	AGS11	AGD93	Dx+Sx forg. / R+L forged
HM	450	CRE Motard	02-04	AGS74	AGD93	Dx forgiata / R forged
HM	450	CRE X ie	07-08	AGS11	AGD93	Dx+Sx forg. / R+L forged
HM	450	CRF X	05-	AGS11	AGD93	Dx+Sx forg. / R+L forged
HM	450	CRM F450ie R	09-	AGS271	AGD93	Dx forgiata / R forged
HM	450	CRM F450ie R	09-	AGS272	AGD93	Dx+Sx forg. / R+L forged
HM	450	CRM F450R	05-08	AGS11	AGD93	Dx+Sx forg. / R+L forged
HM	450	CRM X 450ie	07-08	AGS11	AGD93	Dx+Sx forg. / R+L forged
HM	490	CRE X 490ie	07-08	AGS11	AGD93	Dx+Sx forg. / R+L forged
HM	490	CRM X 490ie	07-08	AGS11	AGD93	Dx+Sx forg. / R+L forged
HM	500	CRF X	05-	AGS11	AGD93	Dx+Sx forg. / R+L forged
HONDA	50	CRE Baja	07-10	AGS30	AGD288	AJP
HONDA	50	CRE Baja	11-	AGS30	AGD304	J.Juan
HONDA	50	CRE Baja	95-00	AGS30	-	
HONDA	50	CRE Baja RR	07-10	AGS30	AGD288	AJP
HONDA	50	CRE Derapage	07-10	AGS30	AGD288	AJP
HONDA	50	CRE Derapage	11-	AGS30	AGD304	J.Juan
HONDA	50	CRE Derapage	95-00	AGS30	-	
HONDA	50	CRE Derapage RR	07-10	AGS30	AGD288	AJP
HONDA	50	CRE Derapage RR	11-	AGS30	AGD304	J.Juan
HONDA	50	CRE Six	01-05	AGS30	AGD288	Dx corta / R short
HONDA	50	CRE Six	01-05	AGS30	AGDS600	Dx. lunga / R long
HONDA	50	CRE Six	07-10	AGS30	AGD288	AJP
HONDA	50	CRE Six	11-	AGS30	AGD304	J.Juan
HONDA	50	CRE Six	95-00	AGS30	-	
HONDA	50	CRE Six Baja	06	AGS30	AGD288	AJP
HONDA	50	CRE Six Baja	01-05	AGS30	AGD288	Dx corta / R short
HONDA	50	CRE Six Baja	01-05	AGS30	AGDS600	Dx. lunga / R long
HONDA	50	CRE Six Derapage	06	AGS30	AGD288	AJP
HONDA	50	CRE Six Derapage	01-05	AGS30	AGD288	Dx corta / R short
HONDA	50	CRE Six Derapage	01-05	AGS30	AGDS600	Dx. lunga / R long
HONDA	50	CRE Six Derapage Competition	07-10	AGS30	AGD288	AJP
HONDA	50	CRE Six Derapage Competition	11-	AGS30	AGD304	J.Juan
HONDA	50	CRF	04-07	AGS116	-	

LEVE / levers

INDICE ANALITICO LEVE / levers index

MARCA Brand	CC	MODELLO Model	ANNI Years	LEVA FRIZIONE Clutch Lever	LEVA FRENO Brake Lever	NOTE Notes
HONDA	50	CRM R	96	AGS68	AGD69	
HONDA	50	CRM R	92-94	AGS68	AGD69	
HONDA	50	Dio GP DT	90-	AGS120	-	
HONDA	50	Dio SP DT	91-	AGS173	AGD70	
HONDA	50	Dio SP TT	90-	AGS173	AGD128	
HONDA	50	Dio ZX	94-	AGS173	AGD70	
HONDA	50	NE Vision	90-94	AGS119	AGD127	
HONDA	50	NPS Zoomer	04-	AGS119	AGD127	
HONDA	50	NSR F	93-95	AGS29	AGD160	
HONDA	50	NSR R	97-00	AGS122	AGD160	
HONDA	50	NSR S	89-95	AGS29	AGD160	
HONDA	50	PK L Wallaroo		AGS120	AGD128	
HONDA	50	SA Vision	88-94	AGS121	AGD128	
HONDA	50	SC 01/SR		AGS173	AGD70	
HONDA	50	SFX	95-	AGS120	AGD70	
HONDA	50	SFX S	97-	AGS120	AGD70	
HONDA	50	SGX Sky	97-	AGS86	AGD16	
HONDA	50	SH H	84-95	AGS172	AGD162	
HONDA	50	SH Scoopy	96-	AGS61	AGD70	
HONDA	50	SJ Bali	93-98	AGS173	AGD160	
HONDA	50	SRX	98-99	-	AGD150	
HONDA	50	SXR	97-99	AGS70	AGD68	
HONDA	50	X8R-S	98-01	AGS77	AGD16	
HONDA	50	X8R-X	98-01	AGS77	AGD16	
HONDA	75	CRM R	89-94	AGS68	AGD69	
HONDA	75	NS1	99-00	AGS29	AGD160	
HONDA	75	NSR	92-94	AGS122	AGD160	
HONDA	75	SA Vision	91	AGS121	AGD128	
HONDA	75	SA Vision	93	AGS121	AGD128	
HONDA	75	SA Vision	98	AGS121	AGD128	
HONDA	75	SH Scoopy	87-95	AGS197	AGD162	
HONDA	75	SH Scoopy	87-95	AGS151	AGD27	
HONDA	75	SH Scoopy D	93-95	AGS197	AGD162	
HONDA	75	SH Scoopy D	93-95	AGS151	AGD27	
HONDA	75	Vision Meet-In		AGS120	AGD128	
HONDA	80	MBX		AGS29	AGD160	
HONDA	80	MTX 80	87	AGS68	AGD69	
HONDA	85	CR R	03-07	AGS11	AGD93	
HONDA	90	NH Yupi	91-94	AGS172	AGD203	
HONDA	90	SRX 90	98-99	-	AGD150	
HONDA	100	CRF 100	04-07	-	AGD281	
HONDA	100	EX Bali	96-97	AGS173	AGD160	
HONDA	100	SCV Lead	00-	AGS173	AGD27	
HONDA	100	SH Scoopy	01	AGS61	AGD70	
HONDA	100	SH Scoopy	96-98	AGS61	AGD70	
HONDA	100	SJ Bali	96-98	AGS173	AGD160	
HONDA	110	NHX Lead i	08-12	AGS197	AGD134	
HONDA	125	ANF Innova	03-07	-	AGD277	
HONDA	125	CA Rebel	95-00	AGS05	-	
HONDA	125	CBF	09-	AGS270	AGD144	
HONDA	125	CBR R	04-08	AGS269	AGD280	
HONDA	125	CG	04-07	AGS268	AGD144	
HONDA	125	CR	03-07	AGS11	AGD93	**Dx+Sx forg.** / R+L forged
HONDA	125	CR 125R	87-91	-	AGD132	**Forgiata** / Forged
HONDA	125	CR 125R	92-95	AGS96	AGD94	**Dx forgiata** / R forged
HONDA	125	CR 125R	96-02	AGS74	AGD93	**Dx+Sx forg.** / R+L forged
HONDA	125	CRE 125	04	AGS11	AGD93	**Dx+Sx forg.** / R+L forged
HONDA	125	CRE 125	02-04	AGS74	AGD93	**Dx+Sx forg.** / R+L forged
HONDA	125	CRE 125 Motard	02-04	AGS74	AGD93	**Dx+Sx forg.** / R+L forged
HONDA	125	CRE 125R	04-08	AGS11	AGD93	**Dx+Sx forg.** / R+L forged
HONDA	125	CRE F125X	08-	AGS30	AGD288	AJP

ACCOSSATO

LEVE / levers

INDICE ANALITICO LEVE / levers index

MARCA Brand	CC	MODELLO Model	ANNI Years	LEVA FRIZIONE Clutch Lever	LEVA FRENO Brake Lever	NOTE Notes
HONDA	125	CRE F125X	11-	AGS30	AGD304	J.Juan
HONDA	125	CRE Motard 125	04	AGS11	AGD93	**Dx+Sx forg.** / R+L forged
HONDA	125	CRE Super Motard	04	AGS11	AGD93	**Dx+Sx forg.** / R+L forged
HONDA	125	CRE Super Motard	02-03	AGS74	AGD93	**Dx+Sx forg.** / R+L forged
HONDA	125	CRM 125R	05-08	AGS11	AGD93	**Dx+Sx forg.** / R+L forged
HONDA	125	CRM F125X	08-	AGS30	AGD288	AJP
HONDA	125	CRM F125X	11-	AGS30	AGD304	J.Juan
HONDA	125	FES Pantheon	03-07	AGS112	AGD52	
HONDA	125	FES Pantheon	00-02	AGS95	AGD105	
HONDA	125	NES @	01-07	AGS197	AGD134	
HONDA	125	NES @	01-07	AGS151	AGD164	
HONDA	125	NSR 125F	90-92	AGS123	AGD144	
HONDA	125	NSR 125R	89-92	AGS123	AGD144	
HONDA	125	PCX	10-	AGS292	AGD276	
HONDA	125	PES Passion	06-07	AGS197	AGD134	
HONDA	125	PES Passion	06-07	AGS151	AGD164	
HONDA	125	S-Wing	07-08	AGS112	AGD52	
HONDA	125	SES Dylan	02-07	AGS197	AGD134	
HONDA	125	SES Dylan	02-07	AGS151	AGD164	
HONDA	125	SH Scoopy	01-04	AGS197	AGD134	
HONDA	125	SH Scoopy	01-04	AGS151	AGD164	
HONDA	125	SH Scoopy i	05-08	AGS197	AGD134	
HONDA	125	SH Scoopy i	05-08	AGS151	AGD164	
HONDA	125	SH Scoopy i	09-	AGS111	AGD150	
HONDA	125	SH Scoopy i Sport	10-	AGS111	AGD150	
HONDA	125	SH Scoopy i TopBox	10-	AGS111	AGD150	
HONDA	125	VT Shadow	99-07	AGS05	AGD150	
HONDA	125	XL 125		AGS152	AGD165	
HONDA	125	XL 125S	87-90	AGS44	-	
HONDA	125	XLV Varadero	01-03	AGS96	AGD144	
HONDA	125	XLV Varadero	04-08	AGS78	AGD144	
HONDA	150	FES Pantheon	03-07	AGS112	AGD52	
HONDA	150	FES Pantheon	00-02	AGS95	AGD105	
HONDA	150	NES @	01-07	AGS197	AGD134	
HONDA	150	NES @	01-07	AGS151	AGD164	
HONDA	150	PES Passion	06-07	AGS197	AGD134	
HONDA	150	PES Passion	06-07	AGS151	AGD164	
HONDA	150	S-Wing	07-08	AGS112	AGD52	
HONDA	150	SES Dylan	02-07	AGS197	AGD134	
HONDA	150	SES Dylan	02-07	AGS151	AGD164	
HONDA	150	SH Scoopy	03-07	AGS197	AGD134	
HONDA	150	SH Scoopy	03-07	AGS151	AGD164	
HONDA	200	XL 200R	-84	AGS141	AGD165	
HONDA	230	230F Enduro	04-07	AGS196	AGD93	**Dx+Sx forg.** / R+L forged
HONDA	230	230F Motard	04-07	AGS196	AGD93	**Dx+Sx forg.** / R+L forged
HONDA	230	230F Trail	04-07	AGS196	AGD93	**Dx+Sx forg.** / R+L forged
HONDA	230	230F Trail ID	04-07	AGS196	AGD93	**Dx+Sx forg.** / R+L forged
HONDA	230	CRF Enduro	04-07	AGS196	AGD93	**Dx+Sx forg.** / R+L forged
HONDA	230	CRF Super Motard	04-07	AGS196	AGD93	**Dx+Sx forg.** / R+L forged
HONDA	230	CRF Trail	04-07	AGS196	AGD93	**Dx+Sx forg.** / R+L forged
HONDA	250	CB 250	92	AGS122	AGD52	
HONDA	250	CB 250	04-06	-	AGD52	
HONDA	250	CB 250	93-	AGS38	AGD52	
HONDA	250	CBF 250	04-07	AGS270	AGD144	
HONDA	250	CR 250	89	AGS153	AGD94	**Dx forgiata** / R forged
HONDA	250	CR 250 R	87-91	-	AGD132	**Forgiata** / Forged
HONDA	250	CR 250 R	87-95	AGS96	AGD94	**Dx forgiata** / R forged
HONDA	250	CR 250 R	96-03	AGS74	AGD93	**Dx+Sx forg.** / R+L forged
HONDA	250	CRE 250ie	07-08	AGS11	AGD93	**Dx+Sx forg.** / R+L forged
HONDA	250	CRE 250R	04	AGS11	AGD93	**Dx+Sx forg.** / R+L forged
HONDA	250	CRE 250R	05	AGS271	AGD93	**Dx forgiata** / R forged

LEVE / levers

INDICE ANALITICO LEVE / levers index

MARCA Brand	CC	MODELLO Model	ANNI Years	LEVA FRIZIONE Clutch Lever	LEVA FRENO Brake Lever	NOTE Notes
HONDA	250	CRE 250R	05	AGS272	AGD93	**Dx+Sx forg.** / R+L forged
HONDA	250	CRE 250R	06-07	AGS11	AGD93	**Dx+Sx forg.** / R+L forged
HONDA	250	CRE 250R	07-	AGS272	AGD278	**Dx+Sx forg.** / R+L forged
HONDA	250	CRE 250R	07-	AGS271	AGD279	
HONDA	250	CRE 250R 2T	04	AGS11	AGD93	**Dx+Sx forg.** / R+L forged
HONDA	250	CRE 250R 2T	02-03	AGS74	AGD93	**Dx+Sx forg.** / R+L forged
HONDA	250	CRE 2T	04	AGS11	AGD93	**Dx+Sx forg.** / R+L forged
HONDA	250	CRE 2T	02-04	AGS74	AGD93	**Dx+Sx forg.** / R+L forged
HONDA	250	CRE 4T	04	AGS11	AGD93	**Dx+Sx forg.** / R+L forged
HONDA	250	CRE F250R	05-07	AGS271	AGD93	**Dx forgiata** / R forged
HONDA	250	CRE F250R	05-07	AGS272	AGD93	**Dx+Sx forg.** / R+L forged
HONDA	250	CRE F250X	04-	AGS11	AGD93	**Dx+Sx forg.** / R+L forged
HONDA	250	CRE Motard 2T 250	04	AGS11	AGD93	**Dx+Sx forg.** / R+L forged
HONDA	250	CRE Motard 2T 250	02-04	AGS74	AGD93	**Dx+Sx forg.** / R+L forged
HONDA	250	CRE Motard 4T 250	04	AGS11	AGD93	**Dx+Sx forg.** / R+L forged
HONDA	250	CRE Supermotard	04	AGS11	AGD93	**Dx+Sx forg.** / R+L forged
HONDA	250	CRE Supermotard 2T	04	AGS11	AGD93	**Dx+Sx forg.** / R+L forged
HONDA	250	CRE Supermotard 2T	02-03	AGS74	AGD93	**Dx+Sx forg.** / R+L forged
HONDA	250	CRF L	13-	AGS300	AGD93	**Dx+Sx forg.** / R+L forged
HONDA	250	CRF R	07	AGS272	AGD278	**Dx+Sx forg.** / R+L forged
HONDA	250	CRF R	07	AGS271	AGD279	
HONDA	250	CRF R	04-06	AGS11	AGD93	**Dx+Sx forg.** / R+L forged
HONDA	250	CRF X	04-07	AGS11	AGD93	**Dx+Sx forg.** / R+L forged
HONDA	250	CRM ie	07-08	AGS11	AGD93	**Dx+Sx forg.** / R+L forged
HONDA	250	CRM R	05-08	AGS11	AGD93	**Dx+Sx forg.** / R+L forged
HONDA	250	CRM R Enduro	05-07	AGS11	-	**Forgiata** / Forged
HONDA	250	CRM R Super Motard	05-06	AGS272	AGD278	**Dx+Sx forg.** / R+L forged
HONDA	250	CRM R Super Motard	05-06	AGS271	AGD279	
HONDA	250	FES Foresight	97-06	AGS95	AGD105	
HONDA	250	FES Pantheon	98-02	AGS95	AGD105	
HONDA	250	Forza EX	05-08	AGS111	AGD150	
HONDA	250	Forza X	05-08	AGS111	AGD150	
HONDA	250	NSS Jazz	01-04	AGS112	AGD52	
HONDA	250	NSS Jazz	05-07	AGS111	AGD150	
HONDA	250	NX Dominator	88-93	AGS05	AGD51	
HONDA	250	XR 250 R	96-03	AGS74	AGD68	
HONDA	250	XR R	87-92	AGS94	AGD147	
HONDA	250	XR R	93-95	AGS94	AGD104	
HONDA	290	CRE 290ie	07-08	AGS11	AGD93	**Dx+Sx forg.** / R+L forged
HONDA	290	CRM 290ie	07-08	AGS11	AGD93	**Dx+Sx forg.** / R+L forged
HONDA	300	CRE F300X	04-	AGS11	AGD93	**Dx+Sx forg.** / R+L forged
HONDA	300	SH	07-	AGS111	AGD150	
HONDA	300	SH ABS	07-	AGS111	AGD150	
HONDA	350	XL 350 R	85-87	AGS68	AGD147	
HONDA	400	FJS Silver Wing	06-	AGS111	AGD150	
HONDA	400	FL 400	89-90	-	AGD211	
HONDA	400	NV 400	95-97	-	AGD150	
HONDA	400	TRX FA Rancher	04-07	AGS284	-	
HONDA	400	XR 400 R	96-03	AGS74	AGD68	
HONDA	450	CB 450S		AGS122	AGD52	
HONDA	450	CRE 450	04	AGS11	AGD93	**Dx+Sx forg.** / R+L forged
HONDA	450	CRE 450	02-04	AGS74	AGD93	**Dx+Sx forg.** / R+L forged
HONDA	450	CRE 450R	07	AGS272	AGD278	**Dx+Sx forg.** / R+L forged
HONDA	450	CRE 450R	07	AGS271	AGD279	
HONDA	450	CRE 450R	05-06	AGS11	AGD93	**Dx+Sx forg.** / R+L forged
HONDA	450	CRE 450X	07	AGS11	AGD93	**Dx+Sx forg.** / R+L forged
HONDA	450	CRE Enduro	04	AGS11	AGD93	**Dx+Sx forg.** / R+L forged
HONDA	450	CRE Enduro	02-03	AGS74	AGD93	**Dx+Sx forg.** / R+L forged
HONDA	450	CRE F450ie R	09-	AGS271	AGD93	**Dx forgiata** / R forged
HONDA	450	CRE F450ie R	09-	AGS272	AGD93	**Dx+Sx forg.** / R+L forged
HONDA	450	CRE F450R	05-08	AGS11	AGD93	**Dx+Sx forg.** / R+L forged

ACCOSSATO

LEVE / levers

INDICE ANALITICO LEVE / levers index

MARCA Brand	CC	MODELLO Model	ANNI Years	LEVA FRIZIONE Clutch Lever	LEVA FRENO Brake Lever	NOTE Notes
HONDA	450	CRE Motard 450	04	AGS11	AGD93	**Dx+Sx forg.** / R+L forged
HONDA	450	CRE Motard 450	02-04	AGS74	AGD93	**Dx+Sx forg.** / R+L forged
HONDA	450	CRE Super Motard	04	AGS11	AGD93	**Dx+Sx forg.** / R+L forged
HONDA	450	CRE Super Motard	02-03	AGS74	AGD93	**Dx+Sx forg.** / R+L forged
HONDA	450	CRE X 450ie	07-08	AGS11	AGD93	**Dx+Sx forg.** / R+L forged
HONDA	450	CRF 450X	05-07	AGS11	AGD93	**Dx+Sx forg.** / R+L forged
HONDA	450	CRF X 450	05-	AGS11	AGD93	**Dx+Sx forg.** / R+L forged
HONDA	450	CRM 450R	07	AGS272	AGD278	**Dx+Sx forg.** / R+L forged
HONDA	450	CRM 450R	07	AGS271	AGD279	
HONDA	450	CRM 450R	05-06	AGS11	AGD93	**Dx+Sx forg.** / R+L forged
HONDA	450	CRM 450X	07	AGS11	-	**Forgiata** / Forged
HONDA	450	CRM F450ie R	09-	AGS271	AGD93	**Dx forgiata** / R forged
HONDA	450	CRM F450ie R	09-	AGS272	AGD93	**Dx+Sx forg.** / R+L forged
HONDA	450	CRM F450R	05-08	AGS11	AGD93	**Dx+Sx forg.** / R+L forged
HONDA	450	CRM X 450ie	07-08	AGS11	AGD93	**Dx+Sx forg.** / R+L forged
HONDA	450	TRX 450	04-05	-	AGD212	
HONDA	450	TRX ER Sportrax	09-	-	AGD212	
HONDA	450	TRX R	05-	-	AGD212	
HONDA	490	CRE 490ie	07	AGS11	AGD93	**Dx+Sx forg.** / R+L forged
HONDA	490	CRE X 490ie	07-08	AGS11	AGD93	**Dx+Sx forg.** / R+L forged
HONDA	490	CRM X 490ie	07-08	AGS11	AGD93	**Dx+Sx forg.** / R+L forged
HONDA	500	CB	94-96	AGS05	AGD51	
HONDA	500	CBF	04-07	AGS05	AGD130	
HONDA	500	CBF ABS	04-07	AGS05	AGD130	
HONDA	500	CRF X	05-	AGS11	AGD93	**Dx+Sx forg.** / R+L forged
HONDA	500	CX	82	AGS176	-	
HONDA	500	GL	82	AGS176	-	
HONDA	500	NX	88-89	AGS78	AGD99	
HONDA	500	NX	90-94	AGS78	AGD117	
HONDA	500	TRX FA Fourtrax F. Rubicon	08-	AGS284	-	
HONDA	500	VT		AGS177	AGD179	
HONDA	500	XLR	82	AGS152	AGD165	
HONDA	600	CB F2	00-02	AGS05	AGD04	
HONDA	600	CBF ABS	07-	AGS07	AGD130	
HONDA	600	CBF Hornet	07-10	AGS07	AGD130	
HONDA	600	CBF Hornet	11-15	AGS07	AGD207	
HONDA	600	CBF Hornet	98-06	AGS05	AGD04	
HONDA	600	CBF N	04-	AGS05	AGD130	
HONDA	600	CBF S	04-	AGS05	AGD130	
HONDA	600	CBR	-90	AGS154	AGD69	
HONDA	600	CBR	01-02	AGS124	AGD04	
HONDA	600	CBR F	11-13	AGS07	AGD207	
HONDA	600	CBR F	03-06	AGS05	AGD04	
HONDA	600	CBR F	89-92	AGS124	AGD131	**Senza tensore** / No tensor
HONDA	600	CBR F	89-92	AGS124	AGD80	
HONDA	600	CBR F	93-98	AGS124	AGD80	
HONDA	600	CBR F	99-02	AGS05	AGD04	
HONDA	600	CBR F2	91-94	AGS124	AGD131	**Senza tensore** / No tensor
HONDA	600	CBR F2	91-94	AGS124	AGD80	
HONDA	600	CBR F3	95-98	AGS124	AGD131	**Senza tensore** / No tensor
HONDA	600	CBR F3	95-98	AGS124	AGD80	
HONDA	600	CBR F4	99-02	AGS124	AGD04	
HONDA	600	CBR FS	01-02	AGS124	AGD04	
HONDA	600	CBR RR	03-06	AGS07	AGD205	
HONDA	600	CBR RR	07-08	AGS07	AGD05	
HONDA	600	CBR RR	09-	AGS03	AGD05	
HONDA	600	CBR RR ABS	09-	AGS03	AGD05	
HONDA	600	FJS Silver Wing	01-09	AGS111	AGD150	
HONDA	600	NV	93-94	-	AGD150	
HONDA	600	NX	88	AGS78	AGD99	
HONDA	600	XL V Transalp	87-93	AGS78	AGD85	

LEVE / levers

INDICE ANALITICO LEVE / levers index

MARCA Brand	**CC**	**MODELLO** Model	**ANNI** Years	**LEVA FRIZIONE** Clutch Lever	**LEVA FRENO** Brake Lever	**NOTE** Notes
HONDA	**600**	**XL V Transalp**	**94-96**	**AGS78**	**AGD99**	
HONDA	**600**	**XR R**	**88-98**	**AGS94**	**AGD104**	
HONDA	**650**	**CB**	**82**	**AGS176**	**-**	
HONDA	**650**	**CB**	**79-81**	**AGS176**	**-**	
HONDA	**650**	**CB**	**80-81**	**AGS176**	**-**	
HONDA	**650**	**CB F**	**14-15**	**#N/D**	**AGD207**	
HONDA	**650**	**CBR F**	**14-15**	**#N/D**	**AGD207**	
HONDA	**650**	**CX**	**83**	**AGS176**	**-**	
HONDA	**650**	**FMX**	**05-07**	**AGS78**	**AGD99**	
HONDA	**650**	**GL**	**83**	**AGS176**	**-**	
HONDA	**650**	**NTV**	**95-97**	**AGS05**	**AGD51**	
HONDA	**650**	**NTV Hawk GT**	**88-91**	**AGS05**	**AGD51**	
HONDA	**650**	**NTV Révéré**	**88-91**	**AGS05**	**AGD51**	
HONDA	**650**	**NTV Révéré**	**92-93**	**AGS05**	**AGD150**	
HONDA	**650**	**NX**	**88-89**	**AGS78**	**AGD167**	**Senza tensore** / No tensor
HONDA	**650**	**NX**	**88-89**	**AGS78**	**AGD99**	
HONDA	**650**	**NX Dominator**	**97-99**	**AGS78**	**AGD119**	
HONDA	**650**	**SLR**	**97-98**	**AGS78**	**AGD176**	
HONDA	**650**	**TRX FA Fourtrax Rincon**	**05-**	**AGS284**	**-**	
HONDA	**650**	**XL V Transalp**	**02**	**AGS78**	**AGD85**	
HONDA	**650**	**XL V Transalp**	**03-06**	**AGS78**	**AGD99**	
HONDA	**650**	**XL V Transalp**	**97-01**	**AGS78**	**AGD282**	
HONDA	**650**	**XR R**	**00-03**	**AGS74**	**AGD68**	
HONDA	**650**	**XRV**	**88-89**	**AGS78**	**AGD99**	
HONDA	**680**	**TRX FA Fourtrax Rincon**	**06-**	**AGS284**	**-**	
HONDA	**700**	**NTV Deauville**	**06-**	**AGS05**	**AGD130**	
HONDA	**700**	**TRX XX**	**08-**	**-**	**AGD291**	
HONDA	**700**	**XL V Transalp**	**08-**	**AGS78**	**AGD282**	
HONDA	**750**	**CB**	**79-81**	**AGS176**	**-**	
HONDA	**750**	**CB F**	**80-82**	**AGS176**	**-**	
HONDA	**750**	**CB F2**	**82-82**	**AGS176**	**-**	
HONDA	**750**	**CB F2**	**94-02**	**AGS05**	**AGD150**	
HONDA	**750**	**CB Seven Fifty**	**91-96**	**AGS05**	**AGD51**	
HONDA	**750**	**CBX**	**87**	**AGS144**	**AGD52**	
HONDA	**750**	**CBX**	**87-01**	**AGS144**	**AGD52**	
HONDA	**750**	**NV C**	**99-01**	**AGS143**	**AGD150**	
HONDA	**750**	**VF C**	**93-01**	**AGS05**	**AGD150**	
HONDA	**750**	**VF C V45 Magna**	**82-83**	**AGS144**	**-**	
HONDA	**750**	**VF F Interceptor**	**83-85**	**AGS144**	**AGD52**	
HONDA	**750**	**VFR**	**90-96**	**AGS155**	**AGD131**	**Senza tensore** / No tensor
HONDA	**750**	**VFR**	**90-96**	**AGS62**	**AGD80**	
HONDA	**750**	**VFR F**	**-87**	**AGS157**	**AGD17**	**Senza tensore** / No tensor
HONDA	**750**	**VFR F**	**-87**	**AGS156**	**AGD168**	
HONDA	**750**	**VFR F**	**87-97**	**AGS155**	**AGD131**	**Senza tensore** / No tensor
HONDA	**750**	**VFR F**	**87-97**	**AGS62**	**AGD80**	
HONDA	**750**	**VFR R**	**88-90**	**AGS155**	**AGD131**	**Senza tensore** / No tensor
HONDA	**750**	**VFR R**	**88-90**	**AGS62**	**AGD80**	
HONDA	**750**	**VT C Shadow**	**83**	**AGS144**	**AGD52**	
HONDA	**750**	**VT C Shadow**	**97-09**	**AGS143**	**AGD150**	
HONDA	**750**	**XRV**	**90-95**	**AGS78**	**AGD99**	
HONDA	**750**	**XRV Africa Twin**	**90-95**	**AGS78**	**AGD167**	**Senza tensore** / No tensor
HONDA	**750**	**XRV Africa Twin**	**90-95**	**AGS78**	**AGD99**	
HONDA	**750**	**XRV Africa Twin**	**96-01**	**AGS78**	**AGD167**	**Senza tensore** / No tensor
HONDA	**750**	**XRV Africa Twin**	**96-01**	**AGS78**	**AGD99**	
HONDA	**800**	**Pacific Coast**	**89-98**	**AGS144**	**AGD52**	
HONDA	**800**	**VFR 800**	**02**	**AGS146S**	**AGD04**	
HONDA	**800**	**VFR 800 A**	**02**	**AGS146S**	**AGD04**	
HONDA	**800**	**VFR 800 FI**	**02**	**AGS146S**	**AGD04**	
HONDA	**800**	**VFR 800 FI**	**98-01**	**AGS146S**	**AGD123**	
HONDA	**900**	**CB 900 F Hornet**	**02-03**	**AGS05**	**AGD130**	
HONDA	**900**	**CB 900 FB**	**81-82**	**AGS178**	**-**	

ACCOSSATO

LEVE / levers

INDICE ANALITICO LEVE / levers index

MARCA Brand	CC	MODELLO Model	ANNI Years	LEVA FRIZIONE Clutch Lever	LEVA FRENO Brake Lever	NOTE Notes
HONDA	900	CB 900F Hornet	04-08	AGS05	AGD130	
HONDA	900	CBR RR Fire Blade	02	AGS07	AGD18	
HONDA	900	CBR RR Fire Blade	93	AGS124	AGD80	
HONDA	900	CBR RR Fire Blade	00-01	AGS124	AGD18	
HONDA	900	CBR RR Fire Blade	92-94	AGS124	AGD18	
HONDA	900	CBR RR Fire Blade	95-96	AGS124	AGD80	
HONDA	900	CBR RR Fire Blade	98-99	AGS124	AGD04	
HONDA	954	CBR RR	02-06	AGS07	AGD18	
HONDA	1000	CB 1000R	08-	AGS08	AGD05	
HONDA	1000	CBF 1000	06-09	AGS146S	AGD130	
HONDA	1000	CBF 1000 ABS	06-09	AGS146S	AGD130	
HONDA	1000	CBR 1000F	87-92	AGS143	AGD80	
HONDA	1000	CBR 1000F	93-99	AGS143	AGD80	
HONDA	1000	CBR 1000RR	04-07	AGS08	AGD05	
HONDA	1000	CBR 1000RR	08-	AGS07	AGD05	
HONDA	1000	CBR 1000RR ABS	09-	AGS07	AGD05	
HONDA	1000	VTR F Fire Storm	97-02	AGS146S	AGD04	
HONDA	1000	VTR SP	00	AGS146S	AGD18	
HONDA	1000	VTR SP1	01	AGS146S	AGD18	
HONDA	1000	VTR SP2	02-	AGS146S	AGD18	
HONDA	1000	XLV Varadero	03-07	AGS196	AGD123	
HONDA	1100	CB 1100	00-01	AGS143	-	
HONDA	1100	CB 1100 R	81-83	AGS176	-	
HONDA	1100	CBR XX Super Black Bird	97-02	AGS146S	AGD123	
HONDA	1100	CBR XX Super Blackbird	03-06	AGS146S	AGD123	
HONDA	1100	GL	82	AGS176	-	
HONDA	1100	ST	90-02	AGS144	-	
HONDA	1100	ST ABS/TCS/CBS	96-98	AGS144	-	
HONDA	1100	ST P	93-00	AGS144	-	
HONDA	1100	ST Pan European A/ABS	90-00	AGS144	-	
HONDA	1100	VF C V65 Magna	83-84	AGS144	AGD52	
HONDA	1100	VF S V65 Sabre	84	AGS144	AGD52	
HONDA	1100	VT C	94-	AGS143	AGD150	
HONDA	1100	VT C Shadow	87-88	AGS143	AGD51	
HONDA	1100	VT C Shadow	92-93	AGS143	AGD51	
HONDA	1100	VT C Shadow	94-96	AGS143	AGD150	
HONDA	1100	VT C Shadow	97-05	AGS143	AGD150	
HONDA	1200	GL Gold Wing	84-87	-	AGD179	
HONDA	1200	VFR F	10-	AGS08	AGD205	
HONDA	1200	VFR FD (Automatica)	10-	-	AGD205	
HONDA	1300	CB F/F1	03-	AGS08	AGD207	
HONDA	1300	ST Pan European	07-	-	AGD285	
HONDA	1300	VTX	03-07	AGS143	AGD150	
HONDA	1500	GL Valkyrie F6C	96-03	AGS143	AGD150	
HONDA	1800	VTX	02-03	AGS143	AGD150	
HUSABERG	125	TC	13	AGS14	AGD316	**Dx Forg Brembo** /Brembo R forged
HUSABERG	125	TC	13	AGS211	AGD316	**Sx+Dx forg.Brembo** /L+R forged Brembo
HUSABERG	125	TE	13	AGS14	AGD316	**Dx Forg Brembo** /Brembo R forged
HUSABERG	125	TE	13	AGS211	AGD316	**Sx+Dx forg. Brembo** /L+R forged Brembo
HUSABERG	250	FC	13	AGS14	AGD316	**Dx Forg Brembo** /Brembo R forged
HUSABERG	250	FC	13	AGS211	AGD316	**Sx+Dx forg. Brembo** /L+R forged Brembo
HUSABERG	250	FE	13	AGS14	AGD316	**Dx Forg Brembo** /Brembo R forged
HUSABERG	250	FE	13	AGS211	AGD316	**Sx+Dx forg. Brembo** /L+R forged Brembo
HUSABERG	250	TC	13	AGS14	AGD316	**Dx Forg Brembo** /Brembo R forged
HUSABERG	250	TC	13	AGS211	AGD316	**Sx+Dx forg. Brembo** /L+R forged Brembo
HUSABERG	250	TE	13	AGS14	AGD316	**Dx Forg Brembo** /Brembo R forged
HUSABERG	250	TE	13	AGS211	AGD316	**Sx+Dx forg. Brembo** /L+R forged Brembo
HUSABERG	450	FC	13	AGS14	AGD316	**Dx Forg Brembo** /Brembo R forged
HUSABERG	450	FC	13	AGS211	AGD316	**Sx+Dx forg. Brembo** /L+R forged Brembo
HUSABERG	450	FE	13	AGS14	AGD316	**Dx Forg Brembo** /Brembo R forged
HUSABERG	450	FE	13	AGS211	AGD316	**Sx+Dx forg. Brembo** /L+R forged Brembo

LEVE / levers

INDICE ANALITICO LEVE / levers index

MARCA Brand	**CC**	**MODELLO** Model	**ANNI** Years	**LEVA FRIZIONE** Clutch Lever	**LEVA FRENO** Brake Lever	**NOTE** Notes
HUSABERG	**501**	**FE**	**13**	**AGS14**	**AGD316**	**Dx Forg Brembo** /Brembo R forged
HUSABERG	**501**	**FE**	**13**	**AGS211**	**AGD316**	**Sx+Dx forg. Brembo** /L+R forged Brembo
HUSABERG	**-**	**All models**	**06-08**	**AGS10**	**AGD10**	**Sx. corta** / L short
HUSABERG	**-**	**All models**	**06-08**	**AGS203**	**AGD219**	**Sx corta sx+dx forg** /L short L+R forged
HUSABERG	**-**	**All models**	**06-08**	**AGS09**	**AGD10**	**Sx lunga** / L long
HUSABERG	**-**	**All models**	**06-08**	**AGS202**	**AGD219**	**Sx lunga Sx+Dx forg** / L long L+R forged
HUSABERG	**-**	**All models**	**89-97**	**AGS23**	**AGD24**	**Dx+Sx forg.** / R+L forged
HUSABERG	**-**	**All models**	**98-05**	**AGS10**	**AGD02**	**Sx. corta** / L short
HUSABERG	**-**	**All models**	**98-05**	**AGS203**	**AGD91**	**Sx corta sx+dx forg** /L short L+R forged
HUSABERG	**-**	**All models**	**98-05**	**AGS09**	**AGD02**	**Sx lunga** / L long
HUSABERG	**-**	**All models**	**98-05**	**AGS202**	**AGD91**	**Sx lunga Sx+Dx forg** / L long L+R forged
HUSABERG	**-**	**Brembo Hydraulic**	**13**	**AGS14**	**AGD316**	**Dx Forg Brembo** /Brembo R forged
HUSABERG	**-**	**Brembo Hydraulic**	**13**	**AGS211**	**AGD316**	**Sx+Dx forg. Brembo** /L+R forged Brembo
HUSABERG	**-**	**Brembo Hydraulic**	**09-12**	**AGS211**	**AGD219**	**Dx+Sx forg.** / R+L forged
HUSABERG	**-**	**Brembo Hydraulic**	**09-12**	**AGS14**	**AGD10**	
HUSABERG	**-**	**Magura Hydraulic**	**09-12**	**AGS17**	**AGD14**	**Dx+Sx forg.** / R+L forged
HUSQVARNA	**50**	**CR**	**11-13**	**-**	**AGD309**	**Dx forgiata** / R forged
HUSQVARNA	**50**	**SM**	**11-13**	**-**	**AGD309**	**Dx forgiata** / R forged
HUSQVARNA	**85**	**TC**	**14-15**	**AGDS629**	**AGDS629**	
HUSQVARNA	**125**	**CR**	**03-09**	**AGS23**	**AGD91**	**Dx forgiata** / R forged
HUSQVARNA	**125**	**CR**	**03-09**	**AGS23**	**AGD02**	
HUSQVARNA	**125**	**CR**	**99-02**	**AGS23**	**AGD24**	
HUSQVARNA	**125**	**SM**	**98-99**	**AGS23**	**AGD24**	
HUSQVARNA	**125**	**SM S**	**07-13**	**AGS02**	**-**	
HUSQVARNA	**125**	**SM S**	**00-07**	**AGS23**	**AGD76**	
HUSQVARNA	**125**	**TC**	**14-15**	**AGS14**	**AGD316**	**Dx Forg Brembo** /Brembo R forged
HUSQVARNA	**125**	**TC**	**14-15**	**AGS211**	**AGD316**	**Sx+Dx forg. Brembo** /L+R forged Brembo
HUSQVARNA	**125**	**TE**	**14-15**	**AGS14**	**AGD316**	**Dx Forg Brembo** /Brembo R forged
HUSQVARNA	**125**	**TE**	**14-15**	**AGS211**	**AGD316**	**Sx+Dx forg. Brembo** /L+R forged Brembo
HUSQVARNA	**125**	**WR**	**03-09**	**AGS23**	**AGD91**	**Dx forgiata** / R forged
HUSQVARNA	**125**	**WR**	**03-09**	**AGS23**	**AGD02**	
HUSQVARNA	**125**	**WR**	**98-02**	**AGS23**	**AGD24**	
HUSQVARNA	**125**	**WRE**	**07-13**	**AGS02**	**-**	
HUSQVARNA	**125**	**WRE**	**00-07**	**AGS23**	**AGD76**	
HUSQVARNA	**125**	**WRE**	**98-99**	**AGS23**	**AGD24**	
HUSQVARNA	**250**	**CR**	**02-04**	**AGS23**	**AGD91**	**Dx forgiata** / R forged
HUSQVARNA	**250**	**CR**	**02-04**	**AGS23**	**AGD02**	
HUSQVARNA	**250**	**CR**	**98-01**	**AGS23**	**AGD24**	
HUSQVARNA	**250**	**FC**	**14-15**	**AGS14**	**AGD316**	**Dx Forg Brembo** /Brembo R forged
HUSQVARNA	**250**	**FC**	**14-15**	**AGS211**	**AGD316**	**Sx+Dx forg. Brembo** /L+R forged Brembo
HUSQVARNA	**250**	**FE**	**14-15**	**AGS14**	**AGD316**	**Dx Forg Brembo** /Brembo R forged
HUSQVARNA	**250**	**FE**	**14-15**	**AGS211**	**AGD316**	**Sx+Dx forg. Brembo** /L+R forged Brembo
HUSQVARNA	**250**	**SMR**	**06-13**	**AGS202**	**AGD210**	**Sx forgiata** / L forged
HUSQVARNA	**250**	**SMR**	**06-13**	**AGS09**	**AGD210**	
HUSQVARNA	**250**	**TC**	**03-10**	**AGS202**	**AGD91**	**Forgiate** / Forged
HUSQVARNA	**250**	**TC**	**03-10**	**AGS09**	**AGD02**	
HUSQVARNA	**250**	**TC**	**14-15**	**AGS14**	**AGD316**	**Dx Forg Brembo** /Brembo R forged
HUSQVARNA	**250**	**TC**	**14-15**	**AGS211**	**AGD316**	**Sx+Dx forg. Brembo** /L+R forged Brembo
HUSQVARNA	**250**	**TE**	**03-10**	**AGS202**	**AGD91**	**Forgiate** / Forged
HUSQVARNA	**250**	**TE**	**03-10**	**AGS09**	**AGD02**	
HUSQVARNA	**250**	**TE**	**14-15**	**AGS14**	**AGD316**	**Dx Forg Brembo** /Brembo R forged
HUSQVARNA	**250**	**TE**	**14-15**	**AGS211**	**AGD316**	**Sx+Dx forg. Brembo** /L+R forged Brembo
HUSQVARNA	**250**	**TXC**	**08-13**	**AGS02**	**AGD91**	**Dx forgiata** / R forged
HUSQVARNA	**250**	**WR**	**02-**	**AGS23**	**AGD91**	**Dx forgiata** / R forged
HUSQVARNA	**250**	**WR**	**02-**	**AGS23**	**AGD02**	
HUSQVARNA	**250**	**WR**	**98-01**	**AGS23**	**AGD24**	
HUSQVARNA	**300**	**TE**	**14-15**	**AGS14**	**AGD316**	**Dx Forg Brembo** /Brembo R forged
HUSQVARNA	**300**	**TE**	**14-15**	**AGS211**	**AGD316**	**Sx+Dx forg. Brembo** /L+R forged Brembo
HUSQVARNA	**310**	**SMR**	**09-13**	**AGS202**	**AGD210**	**Sx forgiata** / L forged
HUSQVARNA	**310**	**SMR**	**09-13**	**AGS09**	**AGD210**	
HUSQVARNA	**310**	**SMR**	**08-09**	**AGS202**	**AGD91**	**Forgiate** / Forged

ACCOSSATO

LEVE / levers

INDICE ANALITICO LEVE / levers index

MARCA Brand	CC	MODELLO Model	ANNI Years	LEVA FRIZIONE Clutch Lever	LEVA FRENO Brake Lever	NOTE Notes
HUSQVARNA	310	SMR	08-09	AGS09	AGD02	
HUSQVARNA	310	TE	08-13	AGS202	AGD91	**Forgiate** / Forged
HUSQVARNA	310	TE	08-13	AGS09	AGD02	
HUSQVARNA	310	TXC	08-13	AGS202	AGD91	**Forgiate** / Forged
HUSQVARNA	310	TXC	08-13	AGS09	AGD02	
HUSQVARNA	350	FC	14-15	AGS14	AGD316	**Dx Forg Brembo** /Brembo R forged
HUSQVARNA	350	FC	14-15	AGS211	AGD316	**Sx+Dx forg. Brembo** /L+R forged Brembo
HUSQVARNA	350	FE	14-15	AGS14	AGD316	**Dx Forg Brembo** /Brembo R forged
HUSQVARNA	350	FE	14-15	AGS211	AGD316	**Sx+Dx forg. Brembo** /L+R forged Brembo
HUSQVARNA	360	WR	02-	AGS23	AGD91	**Dx forgiata** / R forged
HUSQVARNA	360	WR	02-	AGS23	AGD02	
HUSQVARNA	360	WR	99-01	AGS23	AGD24	
HUSQVARNA	400	TE	01	AGS23	AGD24	
HUSQVARNA	410	TE E	99-00	AGS02	AGD76	
HUSQVARNA	450	FC	14-15	AGS14	AGD316	**Dx Forg Brembo** /Brembo R forged
HUSQVARNA	450	FC	14-15	AGS211	AGD316	**Sx+Dx forg. Brembo** /L+R forged Brembo
HUSQVARNA	450	FE	14-15	AGS14	AGD316	**Dx Forg Brembo** /Brembo R forged
HUSQVARNA	450	FE	14-15	AGS211	AGD316	**Sx+Dx forg. Brembo** /L+R forged Brembo
HUSQVARNA	450	SM RR	06	AGS202	AGD210	**Sx forgiata** / L forged
HUSQVARNA	450	SM RR	06	AGS09	AGD210	
HUSQVARNA	450	SMR	03-06	AGS202	AGD91	**Forgiate** / Forged
HUSQVARNA	450	SMR	03-06	AGS09	AGD02	
HUSQVARNA	450	SMR	06-	AGS202	AGD210	**Sx forgiata** / L forged
HUSQVARNA	450	SMR	06-	AGS09	AGD210	
HUSQVARNA	450	TC	03-13	AGS202	AGD91	**Forgiate** / Forged
HUSQVARNA	450	TC	03-13	AGS09	AGD02	
HUSQVARNA	450	TE	03-13	AGS202	AGD91	**Forgiate** / Forged
HUSQVARNA	450	TE	03-13	AGS09	AGD02	
HUSQVARNA	450	TXC	08-13	AGS02	AGD91	**Dx forgiata** / R forged
HUSQVARNA	501	FE	14-15	AGS14	AGD316	**Dx Forg Brembo** /Brembo R forged
HUSQVARNA	501	FE	14-15	AGS211	AGD316	**Sx+Dx forg. Brembo** /L+R forged Brembo
HUSQVARNA	510	SMR	-06	AGS202	AGD91	**Forgiate** / Forged
HUSQVARNA	510	SMR	-06	AGS09	AGD02	
HUSQVARNA	510	SMR	06-13	AGS202	AGD210	**Sx forgiata** / L forged
HUSQVARNA	510	SMR	06-13	AGS09	AGD210	
HUSQVARNA	510	TC	05-	AGS202	AGD91	**Forgiate** / Forged
HUSQVARNA	510	TC	05-	AGS09	AGD02	
HUSQVARNA	510	TE	05-	AGS202	AGD91	**Forgiate** / Forged
HUSQVARNA	510	TE	05-	AGS09	AGD02	
HUSQVARNA	510	TE Centennial	04	AGS202	AGD91	**Forgiate** / Forged
HUSQVARNA	510	TE Centennial	04	AGS09	AGD02	
HUSQVARNA	510	TE R Motard	04	AGS202	AGD91	**Forgiate** / Forged
HUSQVARNA	510	TE R Motard	04	AGS09	AGD02	
HUSQVARNA	510	TXC	08-13	AGS02	AGD91	**Dx forgiata** / R forged
HUSQVARNA	570	SMR	01-02	AGS23	AGD181	
HUSQVARNA	570	SMR	03-04	AGS23	AGD91	**Dx forgiata** / R forged
HUSQVARNA	570	SMR	03-04	AGS23	AGD02	
HUSQVARNA	570	TC	02	AGS23	AGD91	**Dx forgiata** / R forged
HUSQVARNA	570	TC	02	AGS23	AGD02	
HUSQVARNA	570	TE	02	AGS23	AGD91	**Dx forgiata** / R forged
HUSQVARNA	570	TE	02	AGS23	AGD02	
HUSQVARNA	570	TE	03-04	AGS02	AGD91	**Dx forgiata** / R forged
HUSQVARNA	570	TE	03-04	AGS02	AGD02	
HUSQVARNA	570	TE SM	01	AGS23	AGD24	
HUSQVARNA	610	SM ie	08-13	AGS02	AGD76	
HUSQVARNA	610	SM S	06	AGS02	AGD91	**Dx forgiata** / R forged
HUSQVARNA	610	SM S	06	AGS02	AGD02	
HUSQVARNA	610	SM S	00-04	AGS02	AGD76	
HUSQVARNA	610	SM S 610ie	07-08	AGS02	AGD91	**Dx forgiata** / R forged
HUSQVARNA	610	TE 610	08	AGS02	AGD76	
HUSQVARNA	610	TE Dual Purpose	00	AGS23	AGD76	

LEVE / levers

INDICE ANALITICO LEVE / levers index

MARCA Brand	**CC**	**MODELLO** Model	**ANNI** Years	**LEVA FRIZIONE** Clutch Lever	**LEVA FRENO** Brake Lever	**NOTE** Notes
HUSQVARNA	**610**	**TE E Dual Purpose**	**03-07**	**AGS02**	**AGD91**	**Dx forgiata** / R forged
HUSQVARNA	**610**	**TE E Dual Purpose**	**03-07**	**AGS02**	**AGD02**	
HUSQVARNA	**610**	**TE E Dual Purpose**	**06-08**	**AGS02**	**AGD91**	**Dx forgiata** / R forged
HUSQVARNA	**610**	**TE LT**	**00-01**	**AGS02**	**AGD76**	
HUSQVARNA	**630**	**SMS**	**10-13**	**AGS202**	**AGD210**	**Sx forgiata** / L forged
HUSQVARNA	**630**	**SMS**	**10-13**	**AGS09**	**AGD210**	
HUSQVARNA	**650**	**TR Strada**	**13**	**AGS204**	**AGD200**	
HUSQVARNA	**650**	**TR Terra**	**13**	**AGS204**	**AGD200**	
HUSQVARNA	**900**	**Nuda**	**12-13**	**AGS299**	**-**	
HUSQVARNA	**900**	**Nuda R**	**12-13**	**AGS299**	**-**	
HUSQVARNA	**900**	**Nuda R ABS**	**13**	**AGS299**	**-**	
HUSQVARNA	**-**	**All models**	**95-00**	**AGS23**	**AGD24**	
HYOSUNG	**50**	**CAB**		**#N/D**	**AGD58**	
HYOSUNG	**50**	**SB50M**	**07-08**	**AGS175**	**-**	
HYOSUNG	**50**	**SD**	**05-07**	**AGDS624**	**AGD50**	
HYOSUNG	**50**	**SD Sense**	**00-01**	**-**	**AGD58**	
HYOSUNG	**50**	**SD Sense Euro2**	**05-**	**-**	**AGD58**	
HYOSUNG	**50**	**SF B Racing**	**05-07**	**AGDS624**	**AGD50**	
HYOSUNG	**50**	**SF Euro2**	**06-07**	**AGS175**	**-**	
HYOSUNG	**50**	**SF R Rally**	**05-07**	**AGDS624**	**AGD50**	
HYOSUNG	**100**	**EZ100M**	**07-08**	**AGS175**	**AGD58**	
HYOSUNG	**100**	**SF 100 R Rally**	**05-07**	**AGDS624**	**AGD50**	
HYOSUNG	**100**	**Zephyr 100**		**-**	**AGD58**	
HYOSUNG	**125**	**Aquila GV 125**	**05-09**	**AGS206**	**AGD49**	
HYOSUNG	**125**	**Aquila GV 125C**	**05-**	**AGS206**	**AGD49**	
HYOSUNG	**125**	**Comet GT R**	**06-07**	**AGDS624**	**AGD50**	
HYOSUNG	**125**	**Cruise GA F**	**05-06**	**AGS206**	**AGD49**	
HYOSUNG	**125**	**GF 125**	**05-09**	**AGDS624**	**AGDS624**	
HYOSUNG	**125**	**GT 125 Comet**	**05-09**	**AGDS624**	**AGD50**	
HYOSUNG	**125**	**GT 125 Comet R**	**05-09**	**AGDS624**	**AGD50**	
HYOSUNG	**125**	**GT 125R**	**08-**	**AGDS624**	**AGD50**	
HYOSUNG	**125**	**Karion RT 125D**	**05-07**	**AGDS624**	**AGD50**	
HYOSUNG	**125**	**RX 125 D**	**05-07**	**AGDS624**	**AGD50**	
HYOSUNG	**125**	**RX 125 SM**	**05-07**	**AGDS624**	**AGD50**	
HYOSUNG	**250**	**Aquila GV 250**	**04-07**	**AGS206**	**AGD49**	
HYOSUNG	**250**	**Comet GT250R**	**07-08**	**AGS206**	**AGD240**	**Dx. regolabile** / R adjustable
HYOSUNG	**250**	**Comet GT250R**	**07-08**	**AGDS624**	**AGD50**	
HYOSUNG	**250**	**Comet GT250R FI**	**07-**	**AGS206**	**AGD240**	**Dx. regolabile** / R adjustable
HYOSUNG	**250**	**Comet GT250R FI**	**07-**	**AGDS624**	**AGD50**	
HYOSUNG	**250**	**GT 250 Comet**	**05-09**	**AGDS624**	**AGD50**	
HYOSUNG	**250**	**GT 250 Comet R**	**05-09**	**AGDS624**	**AGD50**	
HYOSUNG	**250**	**GT 250 S**	**05-09**	**AGDS624**	**AGD50**	
HYOSUNG	**250**	**GV 250**	**08-**	**AGS206**	**AGD49**	
HYOSUNG	**450**	**TE Rapier 450**	**07-**	**-**	**AGD240**	
HYOSUNG	**650**	**Aquila GV 650**	**05-07**	**AGS206**	**AGD240**	
HYOSUNG	**650**	**Comet GT650**	**04-06**	**AGDS624**	**AGD50**	
HYOSUNG	**650**	**Comet GT650FI**	**07-**	**AGS206**	**AGD240**	
HYOSUNG	**650**	**Comet GT650N**	**08-**	**AGS206**	**AGD240**	
HYOSUNG	**650**	**Comet GT650R**	**05-06**	**AGS206**	**AGD240**	**Dx. regolabile** / R adjustable
HYOSUNG	**650**	**Comet GT650R**	**05-06**	**AGDS624**	**AGD50**	
HYOSUNG	**650**	**Comet GT650R TTC**	**07-08**	**AGS206**	**AGD240**	
HYOSUNG	**650**	**Comet GT650S**	**05-06**	**AGS206**	**AGD240**	**Dx. regolabile** / R adjustable
HYOSUNG	**650**	**Comet GT650S**	**05-06**	**AGDS624**	**AGD50**	
HYOSUNG	**650**	**GT 650 Comet**	**05-07**	**AGDS624**	**AGD50**	
HYOSUNG	**650**	**GT 650 R**	**05-07**	**AGDS624**	**AGD50**	
HYOSUNG	**650**	**GT 650 S**	**05-07**	**AGDS624**	**AGD50**	
ITALJET	**50**	**Dragster 50**		**AGDS600**	**AGDS600**	
ITALJET	**50**	**Formula 50**		**AGDS632**	**AGDS632**	
ITALJET	**50**	**Formula 50**		**AGDS602**	**AGDS602**	**AJP**
ITALJET	**50**	**Pista 50**		**AGDS632**	**AGDS632**	
KAWASAKI	**65**	**KX 65**	**00-10**	**AGS89**	**AGD112**	

ACCOSSATO

LEVE / levers

INDICE ANALITICO LEVE / levers index

MARCA Brand	CC	MODELLO Model	ANNI Years	LEVA FRIZIONE Clutch Lever	LEVA FRENO Brake Lever	NOTE Notes
KAWASAKI	80	KX 80	96-97	AGS212	AGD275	
KAWASAKI	80	KX 80	98-00	AGS89	AGD108	
KAWASAKI	85	KX 85	01-10	AGS89	AGD112	
KAWASAKI	125	BN Eliminator	00-07	AGS265	AGD276	
KAWASAKI	125	KLX CAF	10-	AGS265	AGD217	
KAWASAKI	125	KLX D-Tracker DAF	10-	AGS265	AGD217	
KAWASAKI	125	KX	06-07	AGS97	AGD112	**Dx+Sx forg.** / R+L forged
KAWASAKI	125	KX	00-05	AGS89	AGD112	
KAWASAKI	125	KX	90-93	AGS89	AGD98	
KAWASAKI	125	KX	94-96	AGS89	AGD275	**Sx forgiata** / L forged
KAWASAKI	125	KX	97-99	AGS89	AGD108	
KAWASAKI	250	EL	96-04	AGS138	AGD141	
KAWASAKI	250	KLX	93-95	AGS57	AGD63	
KAWASAKI	250	KLX 250 SAF	09-	AGS265	AGD217	
KAWASAKI	250	KX	05-07	AGS97	AGD112	**Dx+Sx forg.** / R+L forged
KAWASAKI	250	KX	00-04	AGS89	AGD112	
KAWASAKI	250	KX	94-96	AGS89	AGD275	**Dx+Sx forg.** / R+L forged
KAWASAKI	250	KX	97-99	AGS89	AGD108	
KAWASAKI	250	KX F	-04	AGS89	AGD112	**Dx+Sx forg.** / R+L forged
KAWASAKI	250	KX F	05-	AGS97	AGD112	**Dx+Sx forg.** / R+L forged
KAWASAKI	250	KX R 250	05-08	AGS87	AGD112	
KAWASAKI	250	ZZR	96-04	AGS04	AGD19	
KAWASAKI	300	KLX	97-03	AGS262	AGD275	
KAWASAKI	400	Z 400 II	91	AGS138	AGD140	
KAWASAKI	400	ZX 400	85	AGS138	AGD140	
KAWASAKI	400	ZXR	90	AGS46	AGD20	**Tensore freno** / brake tensor
KAWASAKI	400	ZXR	90	AGS140	AGD87	
KAWASAKI	400	ZXR	91-99	AGS04	AGD19	
KAWASAKI	450	KLX R	08-	AGS89	AGD112	
KAWASAKI	450	KX F	06-	AGS261	AGD112	**Dx+Sx forg.** / R+L forged
KAWASAKI	450	KX F 450Fi	10-	AGS87	AGD112	
KAWASAKI	500	EN Custom	90	AGS137	AGD139	
KAWASAKI	500	EN Vulcan	92-03	AGS137	AGD139	
KAWASAKI	500	EN Vulcan	92-03	AGS137	AGD139	
KAWASAKI	500	ER-5	04-05	AGS04	AGD11	
KAWASAKI	500	ER-5	97-04	AGS04	AGD19	**Freno Regolab.** / Adjust. Brake
KAWASAKI	500	ER-5	97-04	AGS04	AGD64	
KAWASAKI	500	GPZ S	87-91	AGS138	AGD141	
KAWASAKI	500	GPZ S	92-03	AGS104	AGD87	**Senza tensore** / No tensor
KAWASAKI	500	GPZ S	92-03	AGS140	AGD20	
KAWASAKI	500	KLE	91-07	AGS104	AGD87	**Senza tensore** / No tensor
KAWASAKI	500	KLE	91-07	AGS140	AGD20	
KAWASAKI	500	KX	92-96	AGS89	AGD275	**Dx+Sx forg.** / R+L forged
KAWASAKI	500	KX	97-03	AGS89	AGD108	**Dx+Sx forg.** / R+L forged
KAWASAKI	550	GPZ	84-85	AGS138	AGD140	
KAWASAKI	550	GT 550	83	AGS149	AGD140	
KAWASAKI	550	GT 550	84-87	AGS138	AGD140	
KAWASAKI	550	Zephyr 550	91-95	AGS04	AGD19	
KAWASAKI	600	GPX R	88-90	AGS54	AGD141	
KAWASAKI	600	GPZ R	87-88	AGS54	AGD141	
KAWASAKI	600	KL	85-86	AGS58	AGD180	
KAWASAKI	600	KLR	91-94	AGS58	AGD152	
KAWASAKI	600	Ninja ZX-6R	07-	AGS260	AGD271	
KAWASAKI	600	Ninja ZX-6R	95-97	AGS104	AGD87	**Senza tensore** / No tensor
KAWASAKI	600	Ninja ZX-6R	95-97	AGS140	AGD20	
KAWASAKI	600	Ninja ZX-6R	97-02	AGS105	AGD03	
KAWASAKI	600	Ninja ZX-6RR	03-05	AGS260	AGD269	
KAWASAKI	600	ZL Eliminator	95-97	AGS137	AGD139	
KAWASAKI	600	ZX-6R	95-97	AGS104	AGD87	**Senza tensore** / No tensor
KAWASAKI	600	ZX-6R	97-99	AGS04	AGD03	
KAWASAKI	600	ZZR	06	AGS04	AGD11	

LEVE / levers

INDICE ANALITICO LEVE / levers index

MARCA Brand	**CC**	**MODELLO** Model	**ANNI** Years	**LEVA FRIZIONE** Clutch Lever	**LEVA FRENO** Brake Lever	**NOTE** Notes
KAWASAKI	600	ZZR	87	AGS54	AGD141	
KAWASAKI	600	ZZR	04-06	AGS260	AGD269	
KAWASAKI	600	ZZR	90-03	AGS104	AGD87	**Senza tensore** / No tensor
KAWASAKI	600	ZZR	90-03	AGS140	AGD20	
KAWASAKI	636	Ninja ZX-6R	05-06	AGS260	AGD270	
KAWASAKI	636	Ninja ZX-6R	13-	AGS260	AGD271	
KAWASAKI	636	Ninja ZX-6R ABS	13-	AGS260	AGD271	
KAWASAKI	650	EJ	99-06	AGS105	AGD139	
KAWASAKI	650	ER-6F	06-08	AGS04	AGD11	
KAWASAKI	650	ER-6F	09-	AGS04	AGD299	
KAWASAKI	650	ER-6F ABS	06-08	AGS04	AGD11	
KAWASAKI	650	ER-6F ABS	09-	AGS04	AGD299	
KAWASAKI	650	ER-6N	06-08	AGS04	AGD11	
KAWASAKI	650	ER-6N	09-	AGS04	AGD299	
KAWASAKI	650	ER-6N ABS	06-08	AGS04	AGD11	
KAWASAKI	650	ER-6N ABS	09-	AGS04	AGD299	
KAWASAKI	650	KL 650	01-02	AGS58	AGD152	
KAWASAKI	650	KL 650	87-89	AGS58	AGD152	
KAWASAKI	650	KL 650 Tengai	89-94	AGS58	AGD152	
KAWASAKI	650	KLE Versys	07-09	AGS04	AGD11	
KAWASAKI	650	KLE Versys ABS	07-09	AGS04	AGD299	
KAWASAKI	650	KLE Versys ABS DAF	10-	AGS04	AGD299	
KAWASAKI	650	KLE Versys CAF	10-	AGS04	AGD299	
KAWASAKI	650	KLR	95-04	AGS58	AGD152	
KAWASAKI	650	KLR 650	95-04	AGS58	AGD152	
KAWASAKI	650	KLX 650	93-95	AGS57	AGD63	
KAWASAKI	650	KLX R	96-01	AGS262	AGD275	
KAWASAKI	750	GPX 750R	87-89	AGS139	AGD141	
KAWASAKI	750	GPZ 750	82-	AGS54	AGD170	
KAWASAKI	750	GPZ 750 Turbo	83-89	AGS54	AGD170	
KAWASAKI	750	GPZ 750 Unitrak	83-89	AGS54	AGD170	
KAWASAKI	750	GPZ 750R	83-89	AGS54	AGD170	
KAWASAKI	750	VN 750 Twin	94	AGS53	AGD64	
KAWASAKI	750	Z750	04-06	AGS04	AGD11	
KAWASAKI	750	Z750	07-	AGS15	AGD01	
KAWASAKI	750	Z750 ABS	07-	AGS15	AGD01	
KAWASAKI	750	Z750 S	05-06	AGS04	AGD11	
KAWASAKI	750	Z750R	11-	AGS15	AGD12	**Nissin**
KAWASAKI	750	ZR Zephyr	91-95	AGS04	AGD19	
KAWASAKI	750	ZR-7	99-03	AGS04	AGD19	
KAWASAKI	750	ZR-7S	99-03	AGS04	AGD19	
KAWASAKI	750	ZX-7R	96-02	AGS117	AGD272	
KAWASAKI	750	ZX-7RR	96-98	AGS117	AGD20	**Tensore freno** / brake tensor
KAWASAKI	750	ZX-7RR	96-98	AGS117	AGD87	
KAWASAKI	750	ZXR	89-95	AGS117	AGD87	**Senza tensore** / No tensor
KAWASAKI	750	ZXR	89-95	AGS117	AGD20	
KAWASAKI	750	ZXR R	91-94	AGS117	AGD20	**Tensore freno** / brake tensor
KAWASAKI	750	ZXR R	91-94	AGS117	AGD87	
KAWASAKI	800	VN 800 Classic	96-06	AGS137	AGD139	
KAWASAKI	800	VN 800 Drifter	99-01	AGS133	AGD126	
KAWASAKI	800	VN 800 Vulcan	95-98	AGS137	AGD139	
KAWASAKI	800	W800	11-	-	AGD86	
KAWASAKI	800	Z800 ABS DDS	13-15	AGS15	AGD01	
KAWASAKI	800	Z800 ADS	13-15	AGS15	AGD01	
KAWASAKI	800	Z800 E ABS DDS	13-15	AGS15	AGD01	
KAWASAKI	800	Z800 E CDS	13-15	AGS15	AGD01	
KAWASAKI	900	GPZ 900R	90	AGS139	AGD87	**Senza tensore** / No tensor
KAWASAKI	900	GPZ 900R	90	AGS117	AGD20	
KAWASAKI	900	GPZ 900R	84-85	AGS139	AGD141	
KAWASAKI	900	VN Classic	06-09	AGS133	AGD126	
KAWASAKI	900	VN Custom	07-	AGS133	AGD126	

ACCOSSATO

LEVE / levers

INDICE ANALITICO LEVE / levers index

MARCA Brand	CC	MODELLO Model	ANNI Years	LEVA FRIZIONE Clutch Lever	LEVA FRENO Brake Lever	NOTE Notes
KAWASAKI	900	ZX-9R	94-98	AGS117	AGD87	**Senza tensore** / No tensor
KAWASAKI	900	ZX-9R	94-98	AGS117	AGD20	
KAWASAKI	900	ZX-9R	99-03	AGS105	AGD03	
KAWASAKI	1000	GPZ 1000 RX	86-88	AGS139	AGD141	
KAWASAKI	1000	GPZ RX	86-88	AGS139	AGD141	
KAWASAKI	1000	GTR	96-03	AGS117	AGD20	**Tensore freno** / brake tensor
KAWASAKI	1000	GTR	96-03	AGS117	AGD87	
KAWASAKI	1000	KLV	04-05	AGS113	AGD03	
KAWASAKI	1000	Ninja ZX-10R	04-05	AGS260	AGD269	
KAWASAKI	1000	Ninja ZX-10R	06-	AGS260	AGD271	
KAWASAKI	1000	Z1000	03-06	AGS15	AGD11	
KAWASAKI	1000	Z1000	07-	AGS15	AGD12	
KAWASAKI	1000	Z1000 ABS	07-	AGS15	AGD12	
KAWASAKI	1000	Z1000SX	11-	AGS260	AGD271	**Nissin**
KAWASAKI	1000	ZX 10	88-90	AGS117	AGD20	**Tensore freno** / brake tensor
KAWASAKI	1000	ZX 10	88-90	AGS117	AGD87	
KAWASAKI	1100	GPZ	95	AGS117	AGD87	
KAWASAKI	1100	GPZ	95-97	AGS117	AGD20	
KAWASAKI	1100	ZR Zephyr 1100	92-95	AGS259	AGD19	
KAWASAKI	1100	ZRX	97-99	AGS117	AGD20	**Tensore freno** / brake tensor
KAWASAKI	1100	ZRX	97-99	AGS117	AGD87	
KAWASAKI	1100	ZZR 1100	90-99	AGS117	AGD87	**Senza tensore** / No tensor
KAWASAKI	1100	ZZR 1100	90-99	AGS117	AGD20	
KAWASAKI	1200	ZRX	04	AGS259	AGD11	
KAWASAKI	1200	ZRX	01-03	AGS259	AGD19	
KAWASAKI	1200	ZRX R	01-03	AGS259	AGD19	
KAWASAKI	1200	ZRX R	04-06	AGS259	AGD11	
KAWASAKI	1200	ZRX S	04	AGS259	AGD11	
KAWASAKI	1200	ZRX S	01-03	AGS259	AGD19	
KAWASAKI	1200	ZX-12R Ninja	00-06	AGS105	AGD11	
KAWASAKI	1200	ZZR	02-03	AGS117	AGD20	**Tensore freno** / brake tensor
KAWASAKI	1200	ZZR	02-03	AGS117	AGD87	
KAWASAKI	1400	GTR 1400	08-	AGS258	AGD271	
KAWASAKI	1400	ZZR	06-	AGS258	AGD271	
KAWASAKI	1400	ZZR ABS	06-	AGS258	AGD271	
KAWASAKI	1500	VN	94-95	AGS47	AGD139	
KAWASAKI	1500	VN Classic	96-99	AGS116	AGD101	
KAWASAKI	1500	VN Classic FI	00-02	AGS118	AGD126	
KAWASAKI	1500	VN Classic Tourer	98-01	AGS118	AGD126	
KAWASAKI	1500	VN Classic Tourer FI	01-03	AGS118	AGD126	
KAWASAKI	1500	VN Drifter	99-00	AGS118	AGD126	
KAWASAKI	1500	VN Mean Streak	02-03	AGS118	AGD126	
KAWASAKI	1600	VN Classic	03-06	AGS118	AGD126	
KAWASAKI	1600	VN Classic Tourer	05-06	AGS118	AGD126	
KAWASAKI	1600	VN Mean Streak	06-07	AGS118	AGD126	
KAWASAKI	1700	VN Classic	09	AGS160	AGD314	
KAWASAKI	1700	VN Classic ABS	10-13	AGS160	AGD314	
KAWASAKI	1700	VN Classic Tourer ABS	10-13	AGS160	AGD314	
KAWASAKI	1700	VN Voyager ABS	09-13	AGS160	AGD314	
KAWASAKI	1700	VN Voyager Custom ABS	11-13	AGS160	AGD314	
KAWASAKI	2000	VN	04-06	AGS133	AGD126	
KAWASAKI	2000	VN Classic	08-	AGS133	AGD126	
KEEWAY	50	F-Act	06-08	AGS228	AGD242	
KEEWAY	50	Flash	06-08	AGS228	AGD242	
KEEWAY	50	Focus	06-08	AGS228	AGD242	
KEEWAY	50	Hurricane	06-08	AGS228	AGD242	
KEEWAY	50	Matrix	06-08	AGS228	AGD242	
KEEWAY	50	Matrix Racing Sport	10-	AGS228	AGD242	
KEEWAY	50	RY6 Racing	10-	AGS228	AGD242	
KEEWAY	50	RY8	06-08	AGS228	AGD242	
KEEWAY	50	RY8	08-	AGS228	AGD242	

LEVE / levers

INDICE ANALITICO LEVE / levers index

MARCA Brand	**CC**	**MODELLO** Model	**ANNI** Years	**LEVA FRIZIONE** Clutch Lever	**LEVA FRENO** Brake Lever	**NOTE** Notes
KEEWAY	**50**	**RY8 Sport Evo**	**10-**	**AGS228**	**AGD242**	
KEEWAY	**125**	**ARN**	**06-08**	**AGS230**	**AGD16**	
KEEWAY	**125**	**F-Act**	**07-**	**AGS228**	**AGD242**	
KEEWAY	**125**	**Focus**	**06-08**	**AGS228**	**AGD242**	
KEEWAY	**125**	**Matrix**	**06-08**	**AGS228**	**AGD242**	
KEEWAY	**125**	**Matrix Racing Sport**	**10-**	**AGS228**	**AGD242**	
KEEWAY	**125**	**Speed**	**06-08**	**AGS229**	**AGD50**	
KEEWAY	**125**	**Superlight**	**06-08**	**AGS236**	**AGD249**	
KEEWAY	**125**	**Superlight Double Balance**	**07-**	**AGS236**	**AGD249**	
KEEWAY	**150**	**ARN**	**06-08**	**AGS230**	**AGD16**	
KEEWAY	**150**	**F-Act**	**07-**	**AGS228**	**AGD242**	
KEEWAY	**150**	**Focus**	**06-08**	**AGS228**	**AGD242**	
KEEWAY	**150**	**Matrix**	**06-08**	**AGS228**	**AGD242**	
KEEWAY	**150**	**Matrix Racing Sport**	**10-**	**AGS228**	**AGD242**	
KEEWAY	**150**	**Speed**	**06-08**	**AGS229**	**AGD50**	
KEEWAY	**150**	**Superlight**		**AGS236**	**AGD249**	
KEEWAY	**150**	**Superlight Double Balance**	**07-**	**AGS236**	**AGD249**	
KEEWAY	**250**	**Landcruiser**		**AGS236**	**AGD249**	
KTM	**65**	**MX**		**AGS161**	**AGD171**	
KTM	**65**	**SX**	**12**	**AGS203**	**AGD310**	**Sx corta sx+dx forg** /L short L+R forged
KTM	**65**	**SX**	**01-03**	**AGS10**	**AGD02**	**Sx. corta** / L short
KTM	**65**	**SX**	**01-03**	**AGS203**	**AGD91**	**Sx corta sx+dx forg** /L short L+R forged
KTM	**65**	**SX**	**01-03**	**AGS09**	**AGD02**	**Sx lunga** / L long
KTM	**65**	**SX**	**01-03**	**AGS202**	**AGD91**	**Sx lunga Sx+Dx forg** / L long L+R forged
KTM	**65**	**SX**	**04-11**	**AGS10**	**-**	**Corta** /Short
KTM	**65**	**SX**	**04-11**	**AGS203**	**-**	**Corta, forgiata** /short, forged
KTM	**65**	**SX**	**04-11**	**AGS09**	**-**	**Lunga** / Long
KTM	**65**	**SX**	**04-11**	**AGS202**	**-**	**Longa forgiata** / Long forged
KTM	**65**	**SX**	**13-15**	**AGDS642**	**AGDS642**	
KTM	**85**	**SX**	**03-12**	**AGS10**	**-**	**Corta** /Short
KTM	**85**	**SX**	**03-12**	**AGS203**	**-**	**Corta, forgiata** /short, forged
KTM	**85**	**SX**	**03-12**	**AGS09**	**-**	**Lunga** / Long
KTM	**85**	**SX**	**03-12**	**AGS202**	**-**	**Longa forgiata** / Long forged
KTM	**85**	**SX**	**13-15**	**AGDS629**	**AGDS629**	
KTM	**105**	**SX**	**03-06**	**AGS10**	**AGD02**	**Sx. corta** / L short
KTM	**105**	**SX**	**03-06**	**AGS203**	**AGD91**	**Sx corta sx+dx forg** /L short L+R forged
KTM	**105**	**SX**	**03-06**	**AGS09**	**AGD02**	**Sx lunga** / L long
KTM	**105**	**SX**	**03-06**	**AGS202**	**AGD91**	**Sx lunga Sx+Dx forg** / L long L+R forged
KTM	**125**	**Duke**	**11-15**	**-**	**AGD315**	
KTM	**125**	**EXC**	**01-05**	**AGS10**	**AGD02**	**Sx. corta** / L short
KTM	**125**	**EXC**	**01-05**	**AGS203**	**AGD91**	**Sx corta sx+dx forg** /L short L+R forged
KTM	**125**	**EXC**	**01-05**	**AGS09**	**AGD02**	**Sx lunga** / L long
KTM	**125**	**EXC**	**01-05**	**AGS202**	**AGD91**	**Sx lunga Sx+Dx forg** / L long L+R forged
KTM	**125**	**EXC**	**06-08**	**AGS10**	**AGD10**	**Sx. corta** / L short
KTM	**125**	**EXC**	**06-08**	**AGS203**	**AGD219**	**Sx corta sx+dx forg** /L short L+R forged
KTM	**125**	**EXC**	**06-08**	**AGS09**	**AGD10**	**Sx lunga** / L long
KTM	**125**	**EXC**	**06-08**	**AGS202**	**AGD219**	**Sx lunga Sx+Dx forg** / L long L+R forged
KTM	**125**	**EXC**	**09-12**	**AGS17**	**AGD14**	**Sx+Dx forg. Magura** /L+R forged Magura
KTM	**125**	**EXC**	**13-15**	**AGS14**	**AGD316**	**Dx Forg Brembo** /Brembo R forged
KTM	**125**	**EXC**	**13-15**	**AGS211**	**AGD316**	**Sx+Dx forg. Brembo** /L+R forged Brembo
KTM	**125**	**EXC Champions Edition 2T**	**09-12**	**AGS17**	**AGD14**	**Sx+Dx forg. Magura** /L+R forged Magura
KTM	**125**	**EXC Six Days**	**01-05**	**AGS10**	**AGD02**	**Sx. corta** / L short
KTM	**125**	**EXC Six Days**	**01-05**	**AGS203**	**AGD91**	**Sx corta sx+dx forg** /L short L+R forged
KTM	**125**	**EXC Six Days**	**01-05**	**AGS09**	**AGD02**	**Sx lunga** / L long
KTM	**125**	**EXC Six Days**	**01-05**	**AGS202**	**AGD91**	**Sx lunga Sx+Dx forg** / L long L+R forged
KTM	**125**	**EXC Six Days**	**06-08**	**AGS10**	**AGD10**	**Sx. corta** / L short
KTM	**125**	**EXC Six Days**	**06-08**	**AGS203**	**AGD219**	**Sx corta sx+dx forg** /L short L+R forged
KTM	**125**	**EXC Six Days**	**09-12**	**AGS17**	**AGD14**	**Sx+Dx forg. Magura** /L+R forged Magura
KTM	**125**	**RC**	**13-15**	**-**	**AGD315**	
KTM	**125**	**SX**	**01-05**	**AGS10**	**AGD02**	**Sx. corta** / L short
KTM	**125**	**SX**	**01-05**	**AGS203**	**AGD91**	**Sx corta sx+dx forg** /L short L+R forged

ACCOSSATO

LEVE / levers

INDICE ANALITICO LEVE / levers index

MARCA Brand	CC	MODELLO Model	ANNI Years	LEVA FRIZIONE Clutch Lever	LEVA FRENO Brake Lever	NOTE Notes
KTM	125	SX	01-05	AGS09	AGD02	**Sx lunga** / L long
KTM	125	SX	01-05	AGS202	AGD91	**Sx lunga Sx+Dx forg** / L long L+R forged
KTM	125	SX	06-08	AGS10	AGD10	**Sx. corta** / L short
KTM	125	SX	06-08	AGS203	AGD219	**Sx corta sx+dx forg** /L short L+R forged
KTM	125	SX	06-08	AGS09	AGD10	**Sx lunga** / L long
KTM	125	SX	06-08	AGS202	AGD219	**Sx lunga Sx+Dx forg** / L long L+R forged
KTM	125	SX	13-15	AGS14	AGD316	**Dx Forg Brembo** /Brembo R forged
KTM	125	SX	13-15	AGS211	AGD316	**Sx+Dx forg. Brembo** /L+R forged Brembo
KTM	125	SX Tyla Rattray	05	AGS10	AGD02	**Sx. corta** / L short
KTM	125	SX Tyla Rattray	05	AGS203	AGD91	**Sx corta sx+dx forg** /L short L+R forged
KTM	125	SX Tyla Rattray	05	AGS09	AGD02	**Sx lunga** / L long
KTM	125	SX Tyla Rattray	05	AGS202	AGD91	**Sx lunga Sx+Dx forg** / L long L+R forged
KTM	125	SXS	01-05	AGS10	AGD02	**Sx. corta** / L short
KTM	125	SXS	01-05	AGS203	AGD91	**Sx corta sx+dx forg** /L short L+R forged
KTM	125	SXS	01-05	AGS09	AGD02	**Sx lunga** / L long
KTM	125	SXS	01-05	AGS202	AGD91	**Sx lunga Sx+Dx forg** / L long L+R forged
KTM	125	SXS	06-08	AGS10	AGD10	**Sx. corta** / L short
KTM	125	SXS	06-08	AGS203	AGD219	**Sx corta sx+dx forg** /L short L+R forged
KTM	125	SXS	06-08	AGS09	AGD10	**Sx lunga** / L long
KTM	125	SXS	06-08	AGS202	AGD219	**Sx lunga Sx+Dx forg** / L long L+R forged
KTM	144	SX	06-07	AGS10	AGD02	**Sx. corta** / L short
KTM	144	SX	06-07	AGS203	AGD91	**Sx corta sx+dx forg** /L short L+R forged
KTM	144	SX	06-07	AGS09	AGD02	**Sx lunga** / L long
KTM	144	SX	06-07	AGS202	AGD91	**Sx lunga Sx+Dx forg** / L long L+R forged
KTM	200	Duke	11-15	-	AGD315	
KTM	200	EXC	01-04	AGS10	AGD02	**Sx. corta** / L short
KTM	200	EXC	01-04	AGS09	AGD02	**Sx lunga** / L long
KTM	200	EXC	01-04	AGS203	AGD91	**Sx lunga** / L long
KTM	200	EXC	01-04	AGS202	AGD91	**Sx lunga Sx+Dx forg** / L long L+R forged
KTM	200	EXC	05-08	AGS10	AGD10	**Sx. corta** / L short
KTM	200	EXC	05-08	AGS203	AGD219	**Sx corta sx+dx forg** /L short L+R forged
KTM	200	EXC	05-08	AGS09	AGD10	**Sx lunga** / L long
KTM	200	EXC	05-08	AGS202	AGD219	**Sx lunga Sx+Dx forg** / L long L+R forged
KTM	200	EXC	09-12	AGS17	AGD14	**Sx+Dx forg. Magura** /L+R forged Magura
KTM	200	EXC	97-00	AGS10	AGD24	**Sx. corta** / L short
KTM	200	EXC	97-00	AGS203	AGD24	**Sx corta sx+dx forg** /L short L+R forged
KTM	200	EXC	97-00	AGS09	AGD24	**Sx lunga** / L long
KTM	200	EXC	97-00	AGS202	AGD24	**Sx lunga Sx+Dx forg** / L long L+R forged
KTM	200	EXC - GS	01-02	AGS10	AGD02	**Sx. corta** / L short
KTM	200	EXC - GS	01-02	AGS203	AGD91	**Sx corta sx+dx forg** /L short L+R forged
KTM	200	EXC - GS	01-02	AGS09	AGD02	**Sx lunga** / L long
KTM	200	EXC - GS	01-02	AGS202	AGD91	**Sx lunga Sx+Dx forg** / L long L+R forged
KTM	200	EXC SGP	01-02	AGS10	AGD02	**Sx. corta** / L short
KTM	200	EXC SGP	01-02	AGS203	AGD91	**Sx corta sx+dx forg** /L short L+R forged
KTM	200	EXC SGP	01-02	AGS09	AGD02	**Sx lunga** / L long
KTM	200	EXC SGP	01-02	AGS202	AGD91	**Sx lunga Sx+Dx forg** / L long L+R forged
KTM	200	MXC	02-03	AGS10	AGD02	**Sx. corta** / L short
KTM	200	MXC	02-03	AGS203	AGD91	**Sx corta sx+dx forg** /L short L+R forged
KTM	200	MXC	02-03	AGS09	AGD02	**Sx lunga** / L long
KTM	200	MXC	02-03	AGS202	AGD91	**Sx lunga Sx+Dx forg** / L long L+R forged
KTM	200	RC	13-15	-	AGD315	
KTM	200	SX	03-04	AGS10	AGD02	**Sx. corta** / L short
KTM	200	SX	03-04	AGS203	AGD91	**Sx corta sx+dx forg** /L short L+R forged
KTM	200	SX	03-04	AGS09	AGD02	**Sx lunga** / L long
KTM	200	SX	03-04	AGS202	AGD91	**Sx lunga Sx+Dx forg** / L long L+R forged
KTM	200	XC	06-07	AGS10	AGD10	**Sx. corta** / L short
KTM	200	XC	06-07	AGS203	AGD219	**Sx corta sx+dx forg** /L short L+R forged
KTM	200	XC	06-07	AGS09	AGD10	**Sx lunga** / L long
KTM	200	XC	06-07	AGS202	AGD219	**Sx lunga Sx+Dx forg** / L long L+R forged
KTM	200	XC-W	06-07	AGS10	AGD10	**Sx. corta** / L short
KTM	200	XC-W	06-07	AGS203	AGD219	**Sx corta sx+dx forg** /L short L+R forged

LEVE / levers

INDICE ANALITICO LEVE / levers index

MARCA Brand	**CC**	**MODELLO** Model	**ANNI** Years	**LEVA FRIZIONE** Clutch Lever	**LEVA FRENO** Brake Lever	**NOTE** Notes
KTM	**200**	**XC-W**	**06-07**	**AGS09**	**AGD10**	**Sx lunga** / L long
KTM	**200**	**XC-W**	**06-07**	**AGS202**	**AGD219**	**Sx lunga Sx+Dx forg** / L long L+R forged
KTM	**250**	**EXC**	**05**	**AGS10**	**AGD10**	**Sx. corta** / L short
KTM	**250**	**EXC**	**05**	**AGS203**	**AGD219**	**Sx corta sx+dx forg** /L short L+R forged
KTM	**250**	**EXC**	**05**	**AGS09**	**AGD10**	**Sx lunga** / L long
KTM	**250**	**EXC**	**05**	**AGS202**	**AGD219**	**Sx lunga Sx+Dx forg** / L long L+R forged
KTM	**250**	**EXC**	**03-04**	**AGS10**	**AGD02**	**Sx. corta** / L short
KTM	**250**	**EXC**	**03-04**	**AGS203**	**AGD91**	**Sx corta sx+dx forg** /L short L+R forged
KTM	**250**	**EXC**	**03-04**	**AGS09**	**AGD02**	**Sx lunga** / L long
KTM	**250**	**EXC**	**03-04**	**AGS202**	**AGD91**	**Sx lunga Sx+Dx forg** / L long L+R forged
KTM	**250**	**EXC**	**06-11**	**AGS211**	**AGD219**	**Dx+Sx forg.** / R+L forged
KTM	**250**	**EXC**	**06-11**	**AGS14**	**AGD10**	
KTM	**250**	**EXC**	**09-12**	**AGS17**	**AGD14**	**Sx+Dx forg. Magura** /L+R forged Magura
KTM	**250**	**EXC**	**13-15**	**AGS14**	**AGD316**	**Dx Forg Brembo** /Brembo R forged
KTM	**250**	**EXC**	**13-15**	**AGS211**	**AGD316**	**Sx+Dx forg. Brembo** /L+R forged Brembo
KTM	**250**	**EXC F**	**13-15**	**AGS14**	**AGD316**	**Dx Forg Brembo** /Brembo R forged
KTM	**250**	**EXC F**	**13-15**	**AGS211**	**AGD316**	**Sx+Dx forg. Brembo** /L+R forged Brembo
KTM	**250**	**EXC Racing**	**01-04**	**AGS10**	**AGD02**	**Sx. corta** / L short
KTM	**250**	**EXC Racing**	**01-04**	**AGS203**	**AGD91**	**Sx corta sx+dx forg** /L short L+R forged
KTM	**250**	**EXC Racing**	**01-04**	**AGS09**	**AGD02**	**Sx lunga** / L long
KTM	**250**	**EXC Racing**	**01-04**	**AGS202**	**AGD91**	**Sx lunga Sx+Dx forg** / L long L+R forged
KTM	**250**	**EXC Racing**	**05-06**	**AGS10**	**AGD10**	**Sx. corta** / L short
KTM	**250**	**EXC Racing**	**05-06**	**AGS203**	**AGD219**	**Sx corta sx+dx forg** /L short L+R forged
KTM	**250**	**EXC Racing**	**05-06**	**AGS09**	**AGD10**	**Sx lunga** / L long
KTM	**250**	**EXC Racing**	**05-06**	**AGS202**	**AGD219**	**Sx lunga Sx+Dx forg** / L long L+R forged
KTM	**250**	**EXC Racing Six Days**	**03-04**	**AGS10**	**AGD02**	**Sx. corta** / L short
KTM	**250**	**EXC Racing Six Days**	**03-04**	**AGS203**	**AGD91**	**Sx corta sx+dx forg** /L short L+R forged
KTM	**250**	**EXC Racing Six Days**	**03-04**	**AGS09**	**AGD02**	**Sx lunga** / L long
KTM	**250**	**EXC Racing Six Days**	**03-04**	**AGS202**	**AGD91**	**Sx lunga Sx+Dx forg** / L long L+R forged
KTM	**250**	**EXC Six Days**	**05**	**AGS10**	**AGD10**	**Sx. corta** / L short
KTM	**250**	**EXC Six Days**	**05**	**AGS203**	**AGD219**	**Sx corta sx+dx forg** /L short L+R forged
KTM	**250**	**EXC Six Days**	**05**	**AGS09**	**AGD10**	**Sx lunga** / L long
KTM	**250**	**EXC Six Days**	**05**	**AGS202**	**AGD219**	**Sx lunga Sx+Dx forg** / L long L+R forged
KTM	**250**	**EXC Six Days**	**01-04**	**AGS10**	**AGD02**	**Sx. corta** / L short
KTM	**250**	**EXC Six Days**	**01-04**	**AGS203**	**AGD91**	**Sx corta sx+dx forg** /L short L+R forged
KTM	**250**	**EXC Six Days**	**01-04**	**AGS09**	**AGD02**	**Sx lunga** / L long
KTM	**250**	**EXC Six Days**	**01-04**	**AGS202**	**AGD91**	**Sx lunga Sx+Dx forg** / L long L+R forged
KTM	**250**	**EXC Six Days**	**06-11**	**AGS211**	**AGD219**	**Dx+Sx forg.** / R+L forged
KTM	**250**	**EXC Six Days**	**06-11**	**AGS14**	**AGD10**	
KTM	**250**	**EXC Six Days**	**09-12**	**AGS17**	**AGD14**	**Sx+Dx forg. Magura** /L+R forged Magura
KTM	**250**	**EXC-F**	**06-07**	**AGS211**	**AGD219**	**Dx+Sx forg.** / R+L forged
KTM	**250**	**EXC-F**	**06-07**	**AGS14**	**AGD10**	
KTM	**250**	**EXC-F Six Days**	**06-07**	**AGS211**	**AGD219**	**Dx+Sx forg.** / R+L forged
KTM	**250**	**EXC-F Six Days**	**06-07**	**AGS14**	**AGD10**	
KTM	**250**	**EXC-G Racing**	**03-04**	**AGS10**	**AGD02**	**Sx. corta** / L short
KTM	**250**	**EXC-G Racing**	**03-04**	**AGS203**	**AGD91**	**Sx corta sx+dx forg** /L short L+R forged
KTM	**250**	**EXC-G Racing**	**03-04**	**AGS09**	**AGD02**	**Sx lunga** / L long
KTM	**250**	**EXC-G Racing**	**03-04**	**AGS202**	**AGD91**	**Sx lunga Sx+Dx forg** / L long L+R forged
KTM	**250**	**MXC**	**01**	**AGS10**	**AGD02**	**Sx. corta** / L short
KTM	**250**	**MXC**	**01**	**AGS203**	**AGD91**	**Sx corta sx+dx forg** /L short L+R forged
KTM	**250**	**MXC**	**01**	**AGS09**	**AGD02**	**Sx lunga** / L long
KTM	**250**	**MXC**	**01**	**AGS202**	**AGD91**	**Sx lunga Sx+Dx forg** / L long L+R forged
KTM	**250**	**SX**	**05**	**AGS10**	**AGD10**	**Sx. corta** / L short
KTM	**250**	**SX**	**05**	**AGS203**	**AGD219**	**Sx corta sx+dx forg** /L short L+R forged
KTM	**250**	**SX**	**05**	**AGS09**	**AGD10**	**Sx lunga** / L long
KTM	**250**	**SX**	**05**	**AGS202**	**AGD219**	**Sx lunga Sx+Dx forg** / L long L+R forged
KTM	**250**	**SX**	**01-04**	**AGS10**	**AGD02**	**Sx. corta** / L short
KTM	**250**	**SX**	**01-04**	**AGS203**	**AGD91**	**Sx corta sx+dx forg** /L short L+R forged
KTM	**250**	**SX**	**01-04**	**AGS09**	**AGD02**	**Sx lunga** / L long
KTM	**250**	**SX**	**01-04**	**AGS202**	**AGD91**	**Sx lunga Sx+Dx forg** / L long L+R forged
KTM	**250**	**SX**	**06-07**	**AGS211**	**AGD219**	**Dx+Sx forg.** / R+L forged

ACCOSSATO

LEVE / levers

INDICE ANALITICO LEVE / levers index

MARCA Brand	CC	MODELLO Model	ANNI Years	LEVA FRIZIONE Clutch Lever	LEVA FRENO Brake Lever	NOTE Notes
KTM	250	SX	06-07	AGS14	AGD10	
KTM	250	SX	13-15	AGS14	AGD316	**Dx Forg Brembo** /Brembo R forged
KTM	250	SX	13-15	AGS211	AGD316	**Sx+Dx forg. Brembo** /L+R forged Brembo
KTM	250	SX F	13-15	AGS14	AGD316	**Dx Forg Brembo** /Brembo R forged
KTM	250	SX F	13-15	AGS211	AGD316	**Sx+Dx forg. Brembo** /L+R forged Brembo
KTM	250	SX-F	07	AGS211	AGD219	**Dx+Sx forg.** / R+L forged
KTM	250	SX-F	07	AGS14	AGD10	
KTM	250	SX-F	05-06	AGS10	AGD10	**Sx. corta** / L short
KTM	250	SX-F	05-06	AGS203	AGD219	**Sx corta sx+dx forg** /L short L+R forged
KTM	250	SX-F	05-06	AGS09	AGD10	**Sx lunga** / L long
KTM	250	SX-F	05-06	AGS202	AGD219	**Sx lunga Sx+Dx forg** / L long L+R forged
KTM	250	SXS	05	AGS10	AGD10	**Sx. corta** / L short
KTM	250	SXS	05	AGS203	AGD219	**Sx corta sx+dx forg** /L short L+R forged
KTM	250	SXS	05	AGS09	AGD10	**Sx lunga** / L long
KTM	250	SXS	05	AGS202	AGD219	**Sx lunga Sx+Dx forg** / L long L+R forged
KTM	250	SXS	01-04	AGS10	AGD02	**Sx. corta** / L short
KTM	250	SXS	01-04	AGS203	AGD91	**Sx corta sx+dx forg** /L short L+R forged
KTM	250	SXS	01-04	AGS09	AGD02	**Sx lunga** / L long
KTM	250	SXS	01-04	AGS202	AGD91	**Sx lunga Sx+Dx forg** / L long L+R forged
KTM	250	SXS	06-07	AGS211	AGD219	**Dx+Sx forg.** / R+L forged
KTM	250	SXS	06-07	AGS14	AGD10	
KTM	250	SXS-F	06-07	AGS211	AGD219	**Dx+Sx forg.** / R+L forged
KTM	250	SXS-F	06-07	AGS14	AGD10	
KTM	250	XC	06-07	AGS211	AGD219	**Dx+Sx forg.** / R+L forged
KTM	250	XC	06-07	AGS14	AGD10	
KTM	250	XC-F	06-07	AGS211	AGD219	**Dx+Sx forg.** / R+L forged
KTM	250	XC-F	06-07	AGS14	AGD10	
KTM	250	XC-W	06-07	AGS211	AGD219	**Dx+Sx forg.** / R+L forged
KTM	250	XC-W	06-07	AGS14	AGD10	
KTM	250	XCF-W	06-07	AGS211	AGD219	**Dx+Sx forg.** / R+L forged
KTM	250	XCF-W	06-07	AGS14	AGD10	
KTM	300	EXC	05	AGS10	AGD10	**Sx. corta** / L short
KTM	300	EXC	05	AGS203	AGD219	**Sx corta sx+dx forg** /L short L+R forged
KTM	300	EXC	05	AGS09	AGD10	**Sx lunga** / L long
KTM	300	EXC	05	AGS202	AGD219	**Sx lunga Sx+Dx forg** / L long L+R forged
KTM	300	EXC	01-04	AGS10	AGD02	**Sx. corta** / L short
KTM	300	EXC	01-04	AGS203	AGD91	**Sx corta sx+dx forg** /L short L+R forged
KTM	300	EXC	01-04	AGS09	AGD02	**Sx lunga** / L long
KTM	300	EXC	01-04	AGS202	AGD91	**Sx lunga Sx+Dx forg** / L long L+R forged
KTM	300	EXC	06-11	AGS211	AGD219	**Dx+Sx forg.** / R+L forged
KTM	300	EXC	06-11	AGS14	AGD10	
KTM	300	EXC	09-12	AGS17	AGD14	**Sx+Dx forg. Magura** /L+R forged Magura
KTM	300	EXC F	13-15	AGS14	AGD316	**Dx Forg Brembo** /Brembo R forged
KTM	300	EXC F	13-15	AGS211	AGD316	**Sx+Dx forg. Brembo** /L+R forged Brembo
KTM	300	EXC Six Days	01-03	AGS10	AGD02	**Sx. corta** / L short
KTM	300	EXC Six Days	01-03	AGS203	AGD91	**Sx corta sx+dx forg** /L short L+R forged
KTM	300	EXC Six Days	01-03	AGS09	AGD02	**Sx lunga** / L long
KTM	300	EXC Six Days	01-03	AGS202	AGD91	**Sx lunga Sx+Dx forg** / L long L+R forged
KTM	300	EXC Six Days	04-05	AGS10	AGD10	**Sx. corta** / L short
KTM	300	EXC Six Days	04-05	AGS203	AGD219	**Sx corta sx+dx forg** /L short L+R forged
KTM	300	EXC Six Days	04-05	AGS09	AGD10	**Sx lunga** / L long
KTM	300	EXC Six Days	04-05	AGS202	AGD219	**Sx lunga Sx+Dx forg** / L long L+R forged
KTM	300	EXC Six Days	06-11	AGS211	AGD219	**Dx+Sx forg.** / R+L forged
KTM	300	EXC Six Days	06-11	AGS14	AGD10	
KTM	300	EXC Six Days	09-12	AGS17	AGD14	**Sx+Dx forg. Magura** /L+R forged Magura
KTM	300	MXC	01-04	AGS10	AGD02	**Sx. corta** / L short
KTM	300	MXC	01-04	AGS203	AGD91	**Sx corta sx+dx forg** /L short L+R forged
KTM	300	MXC	01-04	AGS09	AGD02	**Sx lunga** / L long
KTM	300	MXC	01-04	AGS202	AGD91	**Sx lunga Sx+Dx forg** / L long L+R forged
KTM	300	MXC	05	AGS10	AGD10	**Sx. corta** / L short
KTM	300	MXC	05	AGS203	AGD219	**Sx corta sx+dx forg** /L short L+R forged

LEVE / levers

INDICE ANALITICO LEVE / levers index

MARCA Brand	**CC**	**MODELLO** Model	**ANNI** Years	**LEVA FRIZIONE** Clutch Lever	**LEVA FRENO** Brake Lever	**NOTE** Notes
KTM	**300**	**MXC**	**05**	**AGS09**	**AGD10**	**Sx lunga** / L long
KTM	**300**	**MXC**	**05**	**AGS202**	**AGD219**	**Sx lunga Sx+Dx forg** / L long L+R forged
KTM	**300**	**XC**	**06-07**	**AGS211**	**AGD219**	**Dx+Sx forg.** / R+L forged
KTM	**300**	**XC**	**06-07**	**AGS14**	**AGD10**	
KTM	**300**	**XC-W**	**06-07**	**AGS211**	**AGD219**	**Dx+Sx forg.** / R+L forged
KTM	**300**	**XC-W**	**06-07**	**AGS14**	**AGD10**	
KTM	**350**	**EXC F**	**14-15**	**AGS14**	**AGD316**	**Dx Forg Brembo** /Brembo R forged
KTM	**350**	**EXC F**	**14-15**	**AGS211**	**AGD316**	**Sx+Dx forg. Brembo** /L+R forged Brembo
KTM	**350**	**Freeride**	**12-**	**AGDS629**	**AGDS629**	**Dx+Sx forg.** / R+L forged
KTM	**350**	**SX F**	**14-15**	**AGS14**	**AGD316**	**Dx Forg Brembo** /Brembo R forged
KTM	**350**	**SX F**	**14-15**	**AGS211**	**AGD316**	**Sx+Dx forg. Brembo** /L+R forged Brembo
KTM	**380**	**EXC**	**01-02**	**AGS10**	**AGD02**	**Sx. corta** / L short
KTM	**380**	**EXC**	**01-02**	**AGS203**	**AGD91**	**Sx corta sx+dx forg** /L short L+R forged
KTM	**380**	**EXC**	**01-02**	**AGS09**	**AGD02**	**Sx lunga** / L long
KTM	**380**	**EXC**	**01-02**	**AGS202**	**AGD91**	**Sx lunga Sx+Dx forg** / L long L+R forged
KTM	**380**	**MXC**	**01-02**	**AGS10**	**AGD02**	**Sx. corta** / L short
KTM	**380**	**MXC**	**01-02**	**AGS203**	**AGD91**	**Sx corta sx+dx forg** /L short L+R forged
KTM	**380**	**MXC**	**01-02**	**AGS09**	**AGD02**	**Sx lunga** / L long
KTM	**380**	**MXC**	**01-02**	**AGS202**	**AGD91**	**Sx lunga Sx+Dx forg** / L long L+R forged
KTM	**380**	**SX**	**01-02**	**AGS10**	**AGD02**	**Sx. corta** / L short
KTM	**380**	**SX**	**01-02**	**AGS203**	**AGD91**	**Sx corta sx+dx forg** /L short L+R forged
KTM	**380**	**SX**	**01-02**	**AGS09**	**AGD02**	**Sx lunga** / L long
KTM	**380**	**SX**	**01-02**	**AGS202**	**AGD91**	**Sx lunga Sx+Dx forg** / L long L+R forged
KTM	**390**	**Duke**	**12-15**	**-**	**AGD315**	
KTM	**390**	**RC**	**13-15**	**-**	**AGD315**	
KTM	**400**	**EXC Factory**	**05**	**AGS10**	**AGD10**	**Sx. corta** / L short
KTM	**400**	**EXC Factory**	**05**	**AGS203**	**AGD219**	**Sx corta sx+dx forg** /L short L+R forged
KTM	**400**	**EXC Factory**	**05**	**AGS09**	**AGD10**	**Sx lunga** / L long
KTM	**400**	**EXC Factory**	**05**	**AGS202**	**AGD219**	**Sx lunga Sx+Dx forg** / L long L+R forged
KTM	**400**	**EXC Factory Racing**	**07**	**AGS10**	**AGD10**	**Sx. corta** / L short
KTM	**400**	**EXC Factory Racing**	**07**	**AGS203**	**AGD219**	**Sx corta sx+dx forg** /L short L+R forged
KTM	**400**	**EXC Factory Racing**	**07**	**AGS09**	**AGD10**	**Sx lunga** / L long
KTM	**400**	**EXC Factory Racing**	**07**	**AGS202**	**AGD219**	**Sx lunga Sx+Dx forg** / L long L+R forged
KTM	**400**	**EXC Racing**	**01-04**	**AGS10**	**AGD02**	**Sx. corta** / L short
KTM	**400**	**EXC Racing**	**01-04**	**AGS203**	**AGD91**	**Sx corta sx+dx forg** /L short L+R forged
KTM	**400**	**EXC Racing**	**01-04**	**AGS09**	**AGD02**	**Sx lunga** / L long
KTM	**400**	**EXC Racing**	**01-04**	**AGS202**	**AGD91**	**Sx lunga Sx+Dx forg** / L long L+R forged
KTM	**400**	**EXC Racing**	**05-07**	**AGS10**	**AGD10**	**Sx. corta** / L short
KTM	**400**	**EXC Racing**	**05-07**	**AGS203**	**AGD219**	**Sx corta sx+dx forg** /L short L+R forged
KTM	**400**	**EXC Racing**	**05-07**	**AGS09**	**AGD10**	**Sx lunga** / L long
KTM	**400**	**EXC Racing**	**05-07**	**AGS202**	**AGD219**	**Sx lunga Sx+Dx forg** / L long L+R forged
KTM	**400**	**EXC Racing Six Days**	**01-03**	**AGS10**	**AGD02**	**Sx. corta** / L short
KTM	**400**	**EXC Racing Six Days**	**01-03**	**AGS203**	**AGD91**	**Sx corta sx+dx forg** /L short L+R forged
KTM	**400**	**EXC Racing Six Days**	**01-03**	**AGS09**	**AGD02**	**Sx lunga** / L long
KTM	**400**	**EXC Racing Six Days**	**01-03**	**AGS202**	**AGD91**	**Sx lunga Sx+Dx forg** / L long L+R forged
KTM	**400**	**EXC-G Racing**	**02-04**	**AGS10**	**AGD02**	**Sx. corta** / L short
KTM	**400**	**EXC-G Racing**	**02-04**	**AGS203**	**AGD91**	**Sx corta sx+dx forg** /L short L+R forged
KTM	**400**	**EXC-G Racing**	**02-04**	**AGS09**	**AGD02**	**Sx lunga** / L long
KTM	**400**	**EXC-G Racing**	**02-04**	**AGS202**	**AGD91**	**Sx lunga Sx+Dx forg** / L long L+R forged
KTM	**400**	**EXC-G Racing**	**05-06**	**AGS10**	**AGD10**	**Sx. corta** / L short
KTM	**400**	**EXC-G Racing**	**05-06**	**AGS203**	**AGD219**	**Sx corta sx+dx forg** /L short L+R forged
KTM	**400**	**EXC-G Racing**	**05-06**	**AGS09**	**AGD10**	**Sx lunga** / L long
KTM	**400**	**EXC-G Racing**	**05-06**	**AGS202**	**AGD219**	**Sx lunga Sx+Dx forg** / L long L+R forged
KTM	**400**	**MXC Racing**	**01-02**	**AGS10**	**AGD02**	**Sx. corta** / L short
KTM	**400**	**MXC Racing**	**01-02**	**AGS203**	**AGD91**	**Sx corta sx+dx forg** /L short L+R forged
KTM	**400**	**MXC Racing**	**01-02**	**AGS09**	**AGD02**	**Sx lunga** / L long
KTM	**400**	**MXC Racing**	**01-02**	**AGS202**	**AGD91**	**Sx lunga Sx+Dx forg** / L long L+R forged
KTM	**400**	**SX Racing**	**01-02**	**AGS10**	**AGD02**	**Sx. corta** / L short
KTM	**400**	**SX Racing**	**01-02**	**AGS203**	**AGD91**	**Sx corta sx+dx forg** /L short L+R forged
KTM	**400**	**SX Racing**	**01-02**	**AGS09**	**AGD02**	**Sx lunga** / L long
KTM	**400**	**SX Racing**	**01-02**	**AGS202**	**AGD91**	**Sx lunga Sx+Dx forg** / L long L+R forged

ACCOSSATO

LEVE / levers

INDICE ANALITICO LEVE / levers index

MARCA Brand	CC	MODELLO Model	ANNI Years	LEVA FRIZIONE Clutch Lever	LEVA FRENO Brake Lever	NOTE Notes
KTM	400	XC-W	07	AGS10	AGD10	**Sx. corta** / L short
KTM	400	XC-W	07	AGS203	AGD219	**Sx corta sx+dx forg** /L short L+R forged
KTM	400	XC-W	07	AGS09	AGD10	**Sx lunga** / L long
KTM	400	XC-W	07	AGS202	AGD219	**Sx lunga Sx+Dx forg** / L long L+R forged
KTM	450	EXC	06-11	AGS211	AGD219	**Dx+Sx forg.** / R+L forged
KTM	450	EXC	06-11	AGS14	AGD10	
KTM	450	EXC F	13-15	AGS14	AGD316	**Dx Forg Brembo** /Brembo R forged
KTM	450	EXC F	13-15	AGS211	AGD316	**Sx+Dx forg. Brembo** /L+R forged Brembo
KTM	450	EXC Factory	05	AGS10	AGD10	**Sx. corta** / L short
KTM	450	EXC Factory	05	AGS203	AGD219	**Sx corta sx+dx forg** /L short L+R forged
KTM	450	EXC Factory	05	AGS09	AGD10	**Sx lunga** / L long
KTM	450	EXC Factory	05	AGS202	AGD219	**Sx lunga Sx+Dx forg** / L long L+R forged
KTM	450	EXC Factory Racing	07	AGS10	AGD10	**Sx. corta** / L short
KTM	450	EXC Factory Racing	07	AGS203	AGD219	**Sx corta sx+dx forg** /L short L+R forged
KTM	450	EXC Factory Racing	07	AGS09	AGD10	**Sx lunga** / L long
KTM	450	EXC Factory Racing	07	AGS202	AGD219	**Sx lunga Sx+Dx forg** / L long L+R forged
KTM	450	EXC Racing	03-04	AGS10	AGD02	**Sx. corta** / L short
KTM	450	EXC Racing	03-04	AGS203	AGD91	**Sx corta sx+dx forg** /L short L+R forged
KTM	450	EXC Racing	03-04	AGS09	AGD02	**Sx lunga** / L long
KTM	450	EXC Racing	03-04	AGS202	AGD91	**Sx lunga Sx+Dx forg** / L long L+R forged
KTM	450	EXC Racing	05-07	AGS10	AGD10	**Sx. corta** / L short
KTM	450	EXC Racing	05-07	AGS203	AGD219	**Sx corta sx+dx forg** /L short L+R forged
KTM	450	EXC Racing	05-07	AGS09	AGD10	**Sx lunga** / L long
KTM	450	EXC Racing	05-07	AGS202	AGD219	**Sx lunga Sx+Dx forg** / L long L+R forged
KTM	450	EXC Racing Six Days	04-07	AGS10	AGD10	**Sx. corta** / L short
KTM	450	EXC Racing Six Days	04-07	AGS203	AGD219	**Sx corta sx+dx forg** /L short L+R forged
KTM	450	EXC Racing Six Days	04-07	AGS09	AGD10	**Sx lunga** / L long
KTM	450	EXC Racing Six Days	04-07	AGS202	AGD219	**Sx lunga Sx+Dx forg** / L long L+R forged
KTM	450	EXC Six Days	06-11	AGS211	AGD219	**Dx+Sx forg.** / R+L forged
KTM	450	EXC Six Days	06-11	AGS14	AGD10	
KTM	450	EXC-G Racing	03-04	AGS10	AGD02	**Sx. corta** / L short
KTM	450	EXC-G Racing	03-04	AGS203	AGD91	**Sx corta sx+dx forg** /L short L+R forged
KTM	450	EXC-G Racing	03-04	AGS09	AGD02	**Sx lunga** / L long
KTM	450	EXC-G Racing	03-04	AGS202	AGD91	**Sx lunga Sx+Dx forg** / L long L+R forged
KTM	450	EXC-G Racing	05-06	AGS10	AGD10	**Sx. corta** / L short
KTM	450	EXC-G Racing	05-06	AGS203	AGD219	**Sx corta sx+dx forg** /L short L+R forged
KTM	450	EXC-G Racing	05-06	AGS09	AGD10	**Sx lunga** / L long
KTM	450	EXC-G Racing	05-06	AGS202	AGD219	**Sx lunga Sx+Dx forg** / L long L+R forged
KTM	450	MXC-G Racing	03-04	AGS10	AGD02	**Sx. corta** / L short
KTM	450	MXC-G Racing	03-04	AGS203	AGD91	**Sx corta sx+dx forg** /L short L+R forged
KTM	450	MXC-G Racing	03-04	AGS09	AGD02	**Sx lunga** / L long
KTM	450	MXC-G Racing	03-04	AGS202	AGD91	**Sx lunga Sx+Dx forg** / L long L+R forged
KTM	450	MXC-G Racing	05-	AGS10	AGD10	**Sx. corta** / L short
KTM	450	MXC-G Racing	05-	AGS203	AGD219	**Sx corta sx+dx forg** /L short L+R forged
KTM	450	MXC-G Racing	05-	AGS09	AGD10	**Sx lunga** / L long
KTM	450	MXC-G Racing	05-	AGS202	AGD219	**Sx lunga Sx+Dx forg** / L long L+R forged
KTM	450	SMR	04-07	AGS10	AGD10	**Sx. corta** / L short
KTM	450	SMR	04-07	AGS203	AGD219	**Sx corta sx+dx forg** /L short L+R forged
KTM	450	SMR	04-07	AGS09	AGD10	**Sx lunga** / L long
KTM	450	SMR	04-07	AGS202	AGD219	**Sx lunga Sx+Dx forg** / L long L+R forged
KTM	450	SMS	04-07	AGS10	AGD10	**Sx. corta** / L short
KTM	450	SMS	04-07	AGS203	AGD219	**Sx corta sx+dx forg** /L short L+R forged
KTM	450	SMS	04-07	AGS09	AGD10	**Sx lunga** / L long
KTM	450	SMS	04-07	AGS202	AGD219	**Sx lunga Sx+Dx forg** / L long L+R forged
KTM	450	SX	06-08	AGS10	AGD10	**Sx. corta** / L short
KTM	450	SX	06-08	AGS203	AGD219	**Sx corta sx+dx forg** /L short L+R forged
KTM	450	SX	06-08	AGS09	AGD10	**Sx lunga** / L long
KTM	450	SX	06-08	AGS202	AGD219	**Sx lunga Sx+Dx forg** / L long L+R forged
KTM	450	SX F	13-15	AGS14	AGD316	**Dx Forg Brembo** /Brembo R forged
KTM	450	SX F	13-15	AGS211	AGD316	**Sx+Dx forg. Brembo** /L+R forged Brembo
KTM	450	SX Racing	05	AGS10	AGD10	**Sx. corta** / L short

LEVE / levers

INDICE ANALITICO LEVE / levers index

MARCA Brand	**CC**	**MODELLO** Model	**ANNI** Years	**LEVA FRIZIONE** Clutch Lever	**LEVA FRENO** Brake Lever	**NOTE** Notes
KTM	**450**	**SX Racing**	**05**	**AGS203**	**AGD219**	**Sx corta sx+dx forg** /L short L+R forged
KTM	**450**	**SX Racing**	**05**	**AGS09**	**AGD10**	**Sx lunga** / L long
KTM	**450**	**SX Racing**	**05**	**AGS202**	**AGD219**	**Sx lunga Sx+Dx forg** / L long L+R forged
KTM	**450**	**SX Racing**	**03-04**	**AGS10**	**AGD02**	**Sx. corta** / L short
KTM	**450**	**SX Racing**	**03-04**	**AGS203**	**AGD91**	**Sx corta sx+dx forg** /L short L+R forged
KTM	**450**	**SX Racing**	**03-04**	**AGS09**	**AGD02**	**Sx lunga** / L long
KTM	**450**	**SX Racing**	**03-04**	**AGS202**	**AGD91**	**Sx lunga Sx+Dx forg** / L long L+R forged
KTM	**450**	**SX Steve Ramon**	**05**	**AGS10**	**AGD10**	**Sx. corta** / L short
KTM	**450**	**SX Steve Ramon**	**05**	**AGS203**	**AGD219**	**Sx corta sx+dx forg** /L short L+R forged
KTM	**450**	**SX Steve Ramon**	**05**	**AGS09**	**AGD10**	**Sx lunga** / L long
KTM	**450**	**SX Steve Ramon**	**05**	**AGS202**	**AGD219**	**Sx lunga Sx+Dx forg** / L long L+R forged
KTM	**450**	**SX-F**	**07-08**	**AGS10**	**AGD10**	**Sx. corta** / L short
KTM	**450**	**SX-F**	**07-08**	**AGS203**	**AGD219**	**Sx corta sx+dx forg** /L short L+R forged
KTM	**450**	**SX-F**	**07-08**	**AGS09**	**AGD10**	**Sx lunga** / L long
KTM	**450**	**SX-F**	**07-08**	**AGS202**	**AGD219**	**Sx lunga Sx+Dx forg** / L long L+R forged
KTM	**450**	**SX-F**	**09-**	**AGS17**	**AGD14**	**Dx+Sx forg.** / R+L forged
KTM	**450**	**SXS**	**05-06**	**AGS10**	**AGD10**	**Sx. corta** / L short
KTM	**450**	**SXS**	**05-06**	**AGS203**	**AGD219**	**Sx corta sx+dx forg** /L short L+R forged
KTM	**450**	**SXS**	**05-06**	**AGS09**	**AGD10**	**Sx lunga** / L long
KTM	**450**	**SXS**	**05-06**	**AGS202**	**AGD219**	**Sx lunga Sx+Dx forg** / L long L+R forged
KTM	**450**	**SXS Racing**	**03-04**	**AGS10**	**AGD02**	**Sx. corta** / L short
KTM	**450**	**SXS Racing**	**03-04**	**AGS203**	**AGD91**	**Sx corta sx+dx forg** /L short L+R forged
KTM	**450**	**SXS Racing**	**03-04**	**AGS09**	**AGD02**	**Sx lunga** / L long
KTM	**450**	**SXS Racing**	**03-04**	**AGS202**	**AGD91**	**Sx lunga Sx+Dx forg** / L long L+R forged
KTM	**450**	**SXS Racing**	**05-06**	**AGS10**	**AGD10**	**Sx. corta** / L short
KTM	**450**	**SXS Racing**	**05-06**	**AGS203**	**AGD219**	**Sx corta sx+dx forg** /L short L+R forged
KTM	**450**	**SXS Racing**	**05-06**	**AGS09**	**AGD10**	**Sx lunga** / L long
KTM	**450**	**SXS Racing**	**05-06**	**AGS202**	**AGD219**	**Sx lunga Sx+Dx forg** / L long L+R forged
KTM	**450**	**SXS-F**	**07**	**AGS10**	**AGD10**	**Sx. corta** / L short
KTM	**450**	**SXS-F**	**07**	**AGS203**	**AGD219**	**Sx corta sx+dx forg** /L short L+R forged
KTM	**450**	**SXS-F**	**07**	**AGS09**	**AGD10**	**Sx lunga** / L long
KTM	**450**	**SXS-F**	**07**	**AGS202**	**AGD219**	**Sx lunga Sx+Dx forg** / L long L+R forged
KTM	**450**	**XC**	**07**	**AGS10**	**AGD10**	**Sx. corta** / L short
KTM	**450**	**XC**	**07**	**AGS203**	**AGD219**	**Sx corta sx+dx forg** /L short L+R forged
KTM	**450**	**XC**	**07**	**AGS09**	**AGD10**	**Sx lunga** / L long
KTM	**450**	**XC**	**07**	**AGS202**	**AGD219**	**Sx lunga Sx+Dx forg** / L long L+R forged
KTM	**450**	**XC Cross Country**	**04**	**AGS10**	**AGD02**	**Sx. corta** / L short
KTM	**450**	**XC Cross Country**	**04**	**AGS203**	**AGD91**	**Sx corta sx+dx forg** /L short L+R forged
KTM	**450**	**XC Cross Country**	**04**	**AGS09**	**AGD02**	**Sx lunga** / L long
KTM	**450**	**XC Cross Country**	**04**	**AGS202**	**AGD91**	**Sx lunga Sx+Dx forg** / L long L+R forged
KTM	**450**	**XC-W**	**07**	**AGS10**	**AGD10**	**Sx. corta** / L short
KTM	**450**	**XC-W**	**07**	**AGS203**	**AGD219**	**Sx corta sx+dx forg** /L short L+R forged
KTM	**450**	**XC-W**	**07**	**AGS09**	**AGD10**	**Sx lunga** / L long
KTM	**450**	**XC-W**	**07**	**AGS202**	**AGD219**	**Sx lunga Sx+Dx forg** / L long L+R forged
KTM	**500**	**EXC F**	**13-15**	**AGS14**	**AGD316**	**Dx Forg Brembo** /Brembo R forged
KTM	**500**	**EXC F**	**13-15**	**AGS211**	**AGD316**	**Sx+Dx forg. Brembo** /L+R forged Brembo
KTM	**505**	**SX-F**	**07**	**AGS10**	**AGD10**	**Sx. corta** / L short
KTM	**505**	**SX-F**	**07**	**AGS203**	**AGD219**	**Sx corta sx+dx forg** /L short L+R forged
KTM	**505**	**SX-F**	**07**	**AGS09**	**AGD10**	**Sx lunga** / L long
KTM	**505**	**SX-F**	**07**	**AGS202**	**AGD219**	**Sx lunga Sx+Dx forg** / L long L+R forged
KTM	**520**	**EXC Racing**	**01-02**	**AGS10**	**AGD02**	**Sx. corta** / L short
KTM	**520**	**EXC Racing**	**01-02**	**AGS203**	**AGD91**	**Sx corta sx+dx forg** /L short L+R forged
KTM	**520**	**EXC Racing**	**01-02**	**AGS09**	**AGD02**	**Sx lunga** / L long
KTM	**520**	**EXC Racing**	**01-02**	**AGS202**	**AGD91**	**Sx lunga Sx+Dx forg** / L long L+R forged
KTM	**520**	**EXC Racing Six Days**	**01-02**	**AGS10**	**AGD02**	**Sx. corta** / L short
KTM	**520**	**EXC Racing Six Days**	**01-02**	**AGS203**	**AGD91**	**Sx corta sx+dx forg** /L short L+R forged
KTM	**520**	**EXC Racing Six Days**	**01-02**	**AGS09**	**AGD02**	**Sx lunga** / L long
KTM	**520**	**EXC Racing Six Days**	**01-02**	**AGS202**	**AGD91**	**Sx lunga Sx+Dx forg** / L long L+R forged
KTM	**520**	**EXC-G Racing**	**01-02**	**AGS10**	**AGD02**	**Sx. corta** / L short
KTM	**520**	**EXC-G Racing**	**01-02**	**AGS09**	**AGD02**	**Sx lunga** / L long
KTM	**520**	**EXC-G Racing**	**01-02**	**AGS203**	**AGD91**	**Sx lunga** / L long

ACCOSSATO

LEVE / levers

INDICE ANALITICO LEVE / levers index

MARCA Brand	CC	MODELLO Model	ANNI Years	LEVA FRIZIONE Clutch Lever	LEVA FRENO Brake Lever	NOTE Notes
KTM	520	EXC-G Racing	01-02	AGS202	AGD91	**Sx lunga Sx+Dx forg** / L long L+R forged
KTM	520	MXC Racing	01-02	AGS10	AGD02	**Sx. corta** / L short
KTM	520	MXC Racing	01-02	AGS203	AGD91	**Sx corta sx+dx forg** /L short L+R forged
KTM	520	MXC Racing	01-02	AGS09	AGD02	**Sx lunga** / L long
KTM	520	MXC Racing	01-02	AGS202	AGD91	**Sx lunga Sx+Dx forg** / L long L+R forged
KTM	520	SX Racing	01-02	AGS10	AGD02	**Sx. corta** / L short
KTM	520	SX Racing	01-02	AGS203	AGD91	**Sx corta sx+dx forg** /L short L+R forged
KTM	520	SX Racing	01-02	AGS09	AGD02	**Sx lunga** / L long
KTM	520	SX Racing	01-02	AGS202	AGD91	**Sx lunga Sx+Dx forg** / L long L+R forged
KTM	525	EXC	07-	AGS211	AGD219	**Dx+Sx forg.** / R+L forged
KTM	525	EXC	07-	AGS14	AGD10	
KTM	525	EXC Factory	05-07	AGS10	AGD10	**Sx. corta** / L short
KTM	525	EXC Factory	05-07	AGS203	AGD219	**Sx corta sx+dx forg** /L short L+R forged
KTM	525	EXC Factory	05-07	AGS09	AGD10	**Sx lunga** / L long
KTM	525	EXC Factory	05-07	AGS202	AGD219	**Sx lunga Sx+Dx forg** / L long L+R forged
KTM	525	EXC Factory Racing	05-07	AGS10	AGD10	**Sx. corta** / L short
KTM	525	EXC Factory Racing	05-07	AGS203	AGD219	**Sx corta sx+dx forg** /L short L+R forged
KTM	525	EXC Factory Racing	05-07	AGS09	AGD10	**Sx lunga** / L long
KTM	525	EXC Factory Racing	05-07	AGS202	AGD219	**Sx lunga Sx+Dx forg** / L long L+R forged
KTM	525	EXC Racing	03-04	AGS10	AGD02	**Sx. corta** / L short
KTM	525	EXC Racing	03-04	AGS203	AGD91	**Sx corta sx+dx forg** /L short L+R forged
KTM	525	EXC Racing	03-04	AGS09	AGD02	**Sx lunga** / L long
KTM	525	EXC Racing	03-04	AGS202	AGD91	**Sx lunga Sx+Dx forg** / L long L+R forged
KTM	525	EXC Racing	05-07	AGS10	AGD10	**Sx. corta** / L short
KTM	525	EXC Racing	05-07	AGS203	AGD219	**Sx corta sx+dx forg** /L short L+R forged
KTM	525	EXC Racing	05-07	AGS09	AGD10	**Sx lunga** / L long
KTM	525	EXC Racing	05-07	AGS202	AGD219	**Sx lunga Sx+Dx forg** / L long L+R forged
KTM	525	EXC Racing Six Days	03-04	AGS10	AGD02	**Sx. corta** / L short
KTM	525	EXC Racing Six Days	03-04	AGS203	AGD91	**Sx corta sx+dx forg** /L short L+R forged
KTM	525	EXC Racing Six Days	03-04	AGS09	AGD02	**Sx lunga** / L long
KTM	525	EXC Racing Six Days	03-04	AGS202	AGD91	**Sx lunga Sx+Dx forg** / L long L+R forged
KTM	525	EXC Racing Six Days	05-07	AGS10	AGD10	**Sx. corta** / L short
KTM	525	EXC Racing Six Days	05-07	AGS203	AGD219	**Sx corta sx+dx forg** /L short L+R forged
KTM	525	EXC Racing Six Days	05-07	AGS09	AGD10	**Sx lunga** / L long
KTM	525	EXC Racing Six Days	05-07	AGS202	AGD219	**Sx lunga Sx+Dx forg** / L long L+R forged
KTM	525	EXC-G Racing	03-04	AGS10	AGD02	**Sx. corta** / L short
KTM	525	EXC-G Racing	03-04	AGS203	AGD91	**Sx corta sx+dx forg** /L short L+R forged
KTM	525	EXC-G Racing	03-04	AGS09	AGD02	**Sx lunga** / L long
KTM	525	EXC-G Racing	03-04	AGS202	AGD91	**Sx lunga Sx+Dx forg** / L long L+R forged
KTM	525	EXC-G Racing	05-06	AGS10	AGD10	**Sx. corta** / L short
KTM	525	EXC-G Racing	05-06	AGS203	AGD219	**Sx corta sx+dx forg** /L short L+R forged
KTM	525	EXC-G Racing	05-06	AGS09	AGD10	**Sx lunga** / L long
KTM	525	EXC-G Racing	05-06	AGS202	AGD219	**Sx lunga Sx+Dx forg** / L long L+R forged
KTM	525	MXC Desert Racing	03-04	AGS10	AGD02	**Sx. corta** / L short
KTM	525	MXC Desert Racing	03-04	AGS203	AGD91	**Sx corta sx+dx forg** /L short L+R forged
KTM	525	MXC Desert Racing	03-04	AGS09	AGD02	**Sx lunga** / L long
KTM	525	MXC Desert Racing	03-04	AGS202	AGD91	**Sx lunga Sx+Dx forg** / L long L+R forged
KTM	525	MXC Desert Racing	05-	AGS10	AGD10	**Sx. corta** / L short
KTM	525	MXC Desert Racing	05-	AGS203	AGD219	**Sx corta sx+dx forg** /L short L+R forged
KTM	525	MXC Desert Racing	05-	AGS09	AGD10	**Sx lunga** / L long
KTM	525	MXC Desert Racing	05-	AGS202	AGD219	**Sx lunga Sx+Dx forg** / L long L+R forged
KTM	525	MXC-G Racing	03-04	AGS10	AGD02	**Sx. corta** / L short
KTM	525	MXC-G Racing	03-04	AGS203	AGD91	**Sx corta sx+dx forg** /L short L+R forged
KTM	525	MXC-G Racing	03-04	AGS09	AGD02	**Sx lunga** / L long
KTM	525	MXC-G Racing	03-04	AGS202	AGD91	**Sx lunga Sx+Dx forg** / L long L+R forged
KTM	525	MXC-G Racing	05-	AGS10	AGD10	**Sx. corta** / L short
KTM	525	MXC-G Racing	05-	AGS203	AGD219	**Sx corta sx+dx forg** /L short L+R forged
KTM	525	MXC-G Racing	05-	AGS09	AGD10	**Sx lunga** / L long
KTM	525	MXC-G Racing	05-	AGS202	AGD219	**Sx lunga Sx+Dx forg** / L long L+R forged
KTM	525	SMR	04-05	AGS10	AGD10	**Sx. corta** / L short
KTM	525	SMR	04-05	AGS203	AGD219	**Sx corta sx+dx forg** /L short L+R forged

LEVE / levers

INDICE ANALITICO LEVE / levers index

MARCA Brand	**CC**	**MODELLO** Model	**ANNI** Years	**LEVA FRIZIONE** Clutch Lever	**LEVA FRENO** Brake Lever	**NOTE** Notes
KTM	**525**	**SMR**	**04-05**	**AGS09**	**AGD10**	**Sx lunga** / L long
KTM	**525**	**SMR**	**04-05**	**AGS202**	**AGD219**	**Sx lunga Sx+Dx forg** / L long L+R forged
KTM	**525**	**SX**	**06-**	**AGS10**	**AGD10**	**Sx. corta** / L short
KTM	**525**	**SX**	**06-**	**AGS203**	**AGD219**	**Sx corta sx+dx forg** /L short L+R forged
KTM	**525**	**SX**	**06-**	**AGS09**	**AGD10**	**Sx lunga** / L long
KTM	**525**	**SX**	**06-**	**AGS202**	**AGD219**	**Sx lunga Sx+Dx forg** / L long L+R forged
KTM	**525**	**SX Racing**	**03-04**	**AGS10**	**AGD02**	**Sx. corta** / L short
KTM	**525**	**SX Racing**	**03-04**	**AGS203**	**AGD91**	**Sx corta sx+dx forg** /L short L+R forged
KTM	**525**	**SX Racing**	**03-04**	**AGS09**	**AGD02**	**Sx lunga** / L long
KTM	**525**	**SX Racing**	**03-04**	**AGS202**	**AGD91**	**Sx lunga Sx+Dx forg** / L long L+R forged
KTM	**525**	**SX Racing**	**05-**	**AGS10**	**AGD10**	**Sx. corta** / L short
KTM	**525**	**SX Racing**	**05-**	**AGS203**	**AGD219**	**Sx corta sx+dx forg** /L short L+R forged
KTM	**525**	**SX Racing**	**05-**	**AGS09**	**AGD10**	**Sx lunga** / L long
KTM	**525**	**SX Racing**	**05-**	**AGS202**	**AGD219**	**Sx lunga Sx+Dx forg** / L long L+R forged
KTM	**525**	**SX Supermoto**	**04**	**AGS10**	**AGD02**	**Sx. corta** / L short
KTM	**525**	**SX Supermoto**	**04**	**AGS203**	**AGD91**	**Sx corta sx+dx forg** /L short L+R forged
KTM	**525**	**SX Supermoto**	**04**	**AGS09**	**AGD02**	**Sx lunga** / L long
KTM	**525**	**SX Supermoto**	**04**	**AGS202**	**AGD91**	**Sx lunga Sx+Dx forg** / L long L+R forged
KTM	**525**	**SX Supermoto**	**05-**	**AGS10**	**AGD10**	**Sx. corta** / L short
KTM	**525**	**SX Supermoto**	**05-**	**AGS203**	**AGD219**	**Sx corta sx+dx forg** /L short L+R forged
KTM	**525**	**SX Supermoto**	**05-**	**AGS09**	**AGD10**	**Sx lunga** / L long
KTM	**525**	**SX Supermoto**	**05-**	**AGS202**	**AGD219**	**Sx lunga Sx+Dx forg** / L long L+R forged
KTM	**525**	**XC ATV**	**08-**	**AGS17**	**AGD14**	**Dx+Sx forg.** / R+L forged
KTM	**525**	**XC Desert Racing**	**06-07**	**AGS10**	**AGD10**	**Sx. corta** / L short
KTM	**525**	**XC Desert Racing**	**06-07**	**AGS203**	**AGD219**	**Sx corta sx+dx forg** /L short L+R forged
KTM	**525**	**XC Desert Racing**	**06-07**	**AGS09**	**AGD10**	**Sx lunga** / L long
KTM	**525**	**XC Desert Racing**	**06-07**	**AGS202**	**AGD219**	**Sx lunga Sx+Dx forg** / L long L+R forged
KTM	**525**	**XC-G Racing**	**06**	**AGS10**	**AGD10**	**Sx. corta** / L short
KTM	**525**	**XC-G Racing**	**06**	**AGS203**	**AGD219**	**Sx corta sx+dx forg** /L short L+R forged
KTM	**525**	**XC-G Racing**	**06**	**AGS09**	**AGD10**	**Sx lunga** / L long
KTM	**525**	**XC-G Racing**	**06**	**AGS202**	**AGD219**	**Sx lunga Sx+Dx forg** / L long L+R forged
KTM	**525**	**XC-W**	**07**	**AGS10**	**AGD10**	**Sx. corta** / L short
KTM	**525**	**XC-W**	**07**	**AGS203**	**AGD219**	**Sx corta sx+dx forg** /L short L+R forged
KTM	**525**	**XC-W**	**07**	**AGS09**	**AGD10**	**Sx lunga** / L long
KTM	**525**	**XC-W**	**07**	**AGS202**	**AGD219**	**Sx lunga Sx+Dx forg** / L long L+R forged
KTM	**540**	**SXS**	**06**	**AGS10**	**AGD10**	**Sx. corta** / L short
KTM	**540**	**SXS**	**06**	**AGS203**	**AGD219**	**Sx corta sx+dx forg** /L short L+R forged
KTM	**540**	**SXS**	**06**	**AGS09**	**AGD10**	**Sx lunga** / L long
KTM	**540**	**SXS**	**06**	**AGS202**	**AGD219**	**Sx lunga Sx+Dx forg** / L long L+R forged
KTM	**540**	**SXS Racing**	**01-04**	**AGS10**	**AGD02**	**Sx. corta** / L short
KTM	**540**	**SXS Racing**	**01-04**	**AGS203**	**AGD91**	**Sx corta sx+dx forg** /L short L+R forged
KTM	**540**	**SXS Racing**	**01-04**	**AGS09**	**AGD02**	**Sx lunga** / L long
KTM	**540**	**SXS Racing**	**01-04**	**AGS202**	**AGD91**	**Sx lunga Sx+Dx forg** / L long L+R forged
KTM	**540**	**SXS Racing**	**05-**	**AGS10**	**AGD10**	**Sx. corta** / L short
KTM	**540**	**SXS Racing**	**05-**	**AGS203**	**AGD219**	**Sx corta sx+dx forg** /L short L+R forged
KTM	**540**	**SXS Racing**	**05-**	**AGS09**	**AGD10**	**Sx lunga** / L long
KTM	**540**	**SXS Racing**	**05-**	**AGS202**	**AGD219**	**Sx lunga Sx+Dx forg** / L long L+R forged
KTM	**560**	**SMR**	**06-07**	**AGS10**	**AGD10**	**Sx. corta** / L short
KTM	**560**	**SMR**	**06-07**	**AGS203**	**AGD219**	**Sx corta sx+dx forg** /L short L+R forged
KTM	**560**	**SMR**	**06-07**	**AGS09**	**AGD10**	**Sx lunga** / L long
KTM	**560**	**SMR**	**06-07**	**AGS202**	**AGD219**	**Sx lunga Sx+Dx forg** / L long L+R forged
KTM	**620**	**Adventure**	**97-**	**AGS202**	**AGD24**	**Sx lunga Sx+Dx forg** / L long L+R forged
KTM	**620**	**Adventure**	**97-**	**AGS09**	**AGD24**	
KTM	**620**	**Adventure**	**97-**	**AGS10**	**AGD24**	
KTM	**620**	**Adventure**	**97-**	**AGS203**	**AGD24**	
KTM	**625**	**SC**	**02**	**AGS10**	**AGD02**	**Sx. corta** / L short
KTM	**625**	**SC**	**02**	**AGS203**	**AGD91**	**Sx corta sx+dx forg** /L short L+R forged
KTM	**625**	**SC**	**02**	**AGS09**	**AGD02**	**Sx lunga** / L long
KTM	**625**	**SC**	**02**	**AGS202**	**AGD91**	**Sx lunga Sx+Dx forg** / L long L+R forged
KTM	**625**	**SC Supermoto**	**02**	**AGS10**	**AGD02**	**Sx. corta** / L short
KTM	**625**	**SC Supermoto**	**02**	**AGS203**	**AGD91**	**Sx corta sx+dx forg** /L short L+R forged

ACCOSSATO

LEVE / levers

INDICE ANALITICO LEVE / levers index

MARCA Brand	CC	MODELLO Model	ANNI Years	LEVA FRIZIONE Clutch Lever	LEVA FRENO Brake Lever	NOTE Notes
KTM	625	SC Supermoto	02	AGS09	AGD02	**Sx lunga** / L long
KTM	625	SC Supermoto	02	AGS202	AGD91	**Sx lunga Sx+Dx forg** / L long L+R forged
KTM	625	SMC	04-06	AGS10	AGD02	**Sx. corta** / L short
KTM	625	SMC	04-06	AGS203	AGD91	**Sx corta sx+dx forg** /L short L+R forged
KTM	625	SMC	04-06	AGS09	AGD02	**Sx lunga** / L long
KTM	625	SMC	04-06	AGS202	AGD91	**Sx lunga Sx+Dx forg** / L long L+R forged
KTM	625	SXC	03-07	AGS10	AGD02	**Sx. corta** / L short
KTM	625	SXC	03-07	AGS203	AGD91	**Sx corta sx+dx forg** /L short L+R forged
KTM	625	SXC	03-07	AGS09	AGD02	**Sx lunga** / L long
KTM	625	SXC	03-07	AGS202	AGD91	**Sx lunga Sx+Dx forg** / L long L+R forged
KTM	640	Adventure	02	AGS10	AGD02	**Sx. corta** / L short
KTM	640	Adventure	02	AGS203	AGD91	**Sx corta sx+dx forg** /L short L+R forged
KTM	640	Adventure	02	AGS09	AGD02	**Sx lunga** / L long
KTM	640	Adventure	02	AGS202	AGD91	**Sx lunga Sx+Dx forg** / L long L+R forged
KTM	640	Adventure	04-07	AGS10	AGD24	**Sx. corta** / L short
KTM	640	Adventure	04-07	AGS203	AGD24	**Sx corta sx+dx forg** /L short L+R forged
KTM	640	Adventure	04-07	AGS09	AGD24	**Sx lunga** / L long
KTM	640	Adventure	04-07	AGS202	AGD24	**Sx lunga Sx+Dx forg** / L long L+R forged
KTM	640	Adventure	97-01	AGS202	AGD24	
KTM	640	Adventure	97-01	AGS09	AGD24	
KTM	640	Adventure	97-01	AGS10	AGD24	
KTM	640	Adventure	97-01	AGS203	AGD24	
KTM	640	Duke II	03	AGS10	AGD02	**Sx. corta** / L short
KTM	640	Duke II	03	AGS203	AGD91	**Sx corta sx+dx forg** /L short L+R forged
KTM	640	Duke II	03	AGS09	AGD02	**Sx lunga** / L long
KTM	640	Duke II	03	AGS202	AGD91	**Sx lunga Sx+Dx forg** / L long L+R forged
KTM	640	LC4 Adventure	03	AGS10	AGD02	**Sx. corta** / L short
KTM	640	LC4 Adventure	03	AGS203	AGD91	**Sx corta sx+dx forg** /L short L+R forged
KTM	640	LC4 Adventure	03	AGS09	AGD02	**Sx lunga** / L long
KTM	640	LC4 Adventure	03	AGS202	AGD91	**Sx lunga Sx+Dx forg** / L long L+R forged
KTM	640	LC4 Enduro	04	AGS10	AGD02	**Sx. corta** / L short
KTM	640	LC4 Enduro	04	AGS203	AGD91	**Sx corta sx+dx forg** /L short L+R forged
KTM	640	LC4 Enduro	04	AGS09	AGD02	**Sx lunga** / L long
KTM	640	LC4 Enduro	04	AGS202	AGD91	**Sx lunga Sx+Dx forg** / L long L+R forged
KTM	640	LC4 Enduro 12L	03-04	AGS10	AGD02	**Sx. corta** / L short
KTM	640	LC4 Enduro 12L	03-04	AGS203	AGD91	**Sx corta sx+dx forg** /L short L+R forged
KTM	640	LC4 Enduro 12L	03-04	AGS09	AGD02	**Sx lunga** / L long
KTM	640	LC4 Enduro 12L	03-04	AGS202	AGD91	**Sx lunga Sx+Dx forg** / L long L+R forged
KTM	640	LC4 Enduro 18L	02	AGS10	AGD02	**Sx. corta** / L short
KTM	640	LC4 Enduro 18L	02	AGS09	AGD02	**Sx lunga** / L long
KTM	640	LC4 Enduro 18L	02	AGS203	AGD91	**Sx lunga** / L long
KTM	640	LC4 Enduro 18L	02	AGS202	AGD91	**Sx lunga Sx+Dx forg** / L long L+R forged
KTM	640	LC4 Six Days	02	AGS10	AGD02	**Sx. corta** / L short
KTM	640	LC4 Six Days	02	AGS203	AGD91	**Sx corta sx+dx forg** /L short L+R forged
KTM	640	LC4 Six Days	02	AGS09	AGD02	**Sx lunga** / L long
KTM	640	LC4 Six Days	02	AGS202	AGD91	**Sx lunga Sx+Dx forg** / L long L+R forged
KTM	640	LC4 Supermoto	02	AGS10	AGD02	**Sx. corta** / L short
KTM	640	LC4 Supermoto	02	AGS203	AGD91	**Sx corta sx+dx forg** /L short L+R forged
KTM	640	LC4 Supermoto	02	AGS09	AGD02	**Sx lunga** / L long
KTM	640	LC4 Supermoto	02	AGS202	AGD91	**Sx lunga Sx+Dx forg** / L long L+R forged
KTM	660	Adventure Factory Repli.	03-07	AGS10	AGD02	**Sx. corta** / L short
KTM	660	Adventure Factory Repli.	03-07	AGS203	AGD91	**Sx corta sx+dx forg** /L short L+R forged
KTM	660	Adventure Factory Repli.	03-07	AGS09	AGD02	**Sx lunga** / L long
KTM	660	Adventure Factory Repli.	03-07	AGS202	AGD91	**Sx lunga Sx+Dx forg** / L long L+R forged
KTM	660	Adventure Rallye	01	AGS10	AGD02	**Sx. corta** / L short
KTM	660	Adventure Rallye	01	AGS203	AGD91	**Sx corta sx+dx forg** /L short L+R forged
KTM	660	Adventure Rallye	01	AGS09	AGD02	**Sx lunga** / L long
KTM	660	Adventure Rallye	01	AGS202	AGD91	**Sx lunga Sx+Dx forg** / L long L+R forged
KTM	660	Rallye	02	AGS10	AGD02	**Sx. corta** / L short
KTM	660	Rallye	02	AGS203	AGD91	**Sx corta sx+dx forg** /L short L+R forged
KTM	660	Rallye	02	AGS09	AGD02	**Sx lunga** / L long

LEVE / levers

INDICE ANALITICO LEVE / levers index

MARCA Brand	CC	MODELLO Model	ANNI Years	LEVA FRIZIONE Clutch Lever	LEVA FRENO Brake Lever	NOTE Notes
KTM	660	Rallye	02	AGS202	AGD91	**Sx lunga Sx+Dx forg** / L long L+R forged
KTM	660	Rallye Factory Replica	03-07	AGS10	AGD02	**Sx. corta** / L short
KTM	660	Rallye Factory Replica	03-07	AGS203	AGD91	**Sx corta sx+dx forg** /L short L+R forged
KTM	660	Rallye Factory Replica	03-07	AGS09	AGD02	**Sx lunga** / L long
KTM	660	Rallye Factory Replica	03-07	AGS202	AGD91	**Sx lunga Sx+Dx forg** / L long L+R forged
KTM	660	SMC	03-06	AGS10	AGD02	**Sx. corta** / L short
KTM	660	SMC	03-06	AGS203	AGD91	**Sx corta sx+dx forg** /L short L+R forged
KTM	660	SMC	03-06	AGS09	AGD02	**Sx lunga** / L long
KTM	660	SMC	03-06	AGS202	AGD91	**Sx lunga Sx+Dx forg** / L long L+R forged
KTM	660	SMS	04	AGS10	AGD02	**Sx. corta** / L short
KTM	660	SMS	04	AGS203	AGD91	**Sx corta sx+dx forg** /L short L+R forged
KTM	660	SMS	04	AGS09	AGD02	**Sx lunga** / L long
KTM	660	SMS	04	AGS202	AGD91	**Sx lunga Sx+Dx forg** / L long L+R forged
KTM	660	Supermoto Factory Replica	03	AGS10	AGD02	**Sx. corta** / L short
KTM	660	Supermoto Factory Replica	03	AGS203	AGD91	**Sx corta sx+dx forg** /L short L+R forged
KTM	660	Supermoto Factory Replica	03	AGS09	AGD02	**Sx lunga** / L long
KTM	660	Supermoto Factory Replica	03	AGS202	AGD91	**Sx lunga Sx+Dx forg** / L long L+R forged
KTM	690	Duke	08-10	AGS285	AGD292	
KTM	690	Duke	11-	AGS09	AGD149	
KTM	690	Duke ABS	11-	AGS09	AGD149	
KTM	690	Duke R	10-	AGS285	AGD292	
KTM	690	Enduro	08-	AGS203	AGD24	**Sx corta sx+dx forg** /L short L+R forged
KTM	690	Enduro	08-	AGS202	AGD24	**Sx lunga Sx+Dx forg** / L long L+R forged
KTM	690	Rallye Factory Replica RFR	07-	AGS10	AGD02	**Sx. corta** / L short
KTM	690	Rallye Factory Replica RFR	07-	AGS203	AGD91	**Sx corta sx+dx forg** /L short L+R forged
KTM	690	Rallye Factory Replica RFR	07-	AGS09	AGD02	**Sx lunga** / L long
KTM	690	Rallye Factory Replica RFR	07-	AGS202	AGD91	**Sx lunga Sx+Dx forg** / L long L+R forged
KTM	690	SM	07-15	AGS09	AGD149	
KTM	690	SMC R	10-15	AGS09	AGD149	
KTM	690	Supermoto Prestige	07	AGS285	AGD292	
KTM	690	Supermoto R	08-	AGS285	AGD292	
KTM	950	Adventure	03-05	AGS10	AGD02	**Sx. corta** / L short
KTM	950	Adventure	03-05	AGS203	AGD91	**Sx corta sx+dx forg** /L short L+R forged
KTM	950	Adventure	03-05	AGS09	AGD02	**Sx lunga** / L long
KTM	950	Adventure	03-05	AGS202	AGD91	**Sx lunga Sx+Dx forg** / L long L+R forged
KTM	950	Superenduro	06-	AGS203	AGD24	**Sx corta sx+dx forg** /L short L+R forged
KTM	950	Superenduro	06-	AGS202	AGD24	**Sx lunga Sx+Dx forg** / L long L+R forged
KTM	950	Superenduro R	07-	AGS203	AGD24	**Sx corta sx+dx forg** /L short L+R forged
KTM	950	Superenduro R	07-	AGS202	AGD24	**Sx lunga Sx+Dx forg** / L long L+R forged
KTM	950	Supermoto	05-	AGS203	AGD292	**Sx corta sx+dx forg** /L short L+R forged
KTM	950	Supermoto	05-	AGS202	AGD292	**Sx lunga Sx+Dx forg** / L long L+R forged
KTM	990	Adventure	06-	AGS203	AGD219	**Sx corta sx+dx forg** /L short L+R forged
KTM	990	Adventure	06-	AGS202	AGD219	**Sx lunga Sx+Dx forg** / L long L+R forged
KTM	990	Adventure S	06-	AGS203	AGD219	**Sx corta sx+dx forg** /L short L+R forged
KTM	990	Adventure S	06-	AGS202	AGD219	**Sx lunga Sx+Dx forg** / L long L+R forged
KTM	990	SMT	10-	AGS10	AGD292	**Sx. corta** / L short
KTM	990	SMT	10-	AGS203	AGD292	**Sx corta sx+dx forg** /L short L+R forged
KTM	990	SMT	10-	AGS09	AGD292	**Sx lunga** / L long
KTM	990	SMT	10-	AGS202	AGD292	**Sx lunga Sx+Dx forg** / L long L+R forged
KTM	990	Super Duke	05-	AGS285	AGD208	
KTM	990	Super Duke R	07-	AGS285	AGD208	
KTM	1190	RC8	08-	AGS285	AGD208	
KTM	1190	RC8R	09-	AGS285	AGD208	
KTM	1190	RC8R Akrapovic	09-	AGS285	AGD208	
KTM	1190	RC8R Red Bull	09-	AGS285	AGD208	
KTM	-	Brembo Hydraulic	13-15	AGS14	AGD316	**Dx Forg Brembo** /Brembo R forged
KTM	-	Brembo Hydraulic	13-15	AGS211	AGD316	**Sx+Dx forg. Brembo** /L+R forged Brembo
KTM	-	Magura Hydraulic	03-08	AGS10	-	**Corta** /Short
KTM	-	Magura Hydraulic	03-08	AGS203	-	**Corta, forgiata** /short, forged
KTM	-	Magura Hydraulic	03-08	AGS09	-	**Lunga** / Long
KTM	-	Magura Hydraulic	03-08	AGS202	-	**Longa forgiata** / Long forged

ACCOSSATO

LEVE / levers

INDICE ANALITICO LEVE / levers index

MARCA Brand	CC	MODELLO Model	ANNI Years	LEVA FRIZIONE Clutch Lever	LEVA FRENO Brake Lever	NOTE Notes
KTM	-	Magura Hydraulic	09-12	AGS17	AGD14	**Dx+Sx forg.** / R+L forged
KTM	-	Manillar Domino	-00	AGS23	-	
KYMCO	50	Agility	05-07	AGS190	AGD196	
KYMCO	50	Agility 4T	07-08	AGS190	AGD196	
KYMCO	50	Agility R16 4T	08-	AGS188	AGD194	
KYMCO	50	Agility R16 4T	08-	AGS189	AGD197	
KYMCO	50	Agility RS	09-	AGS190	AGD196	
KYMCO	50	Agility RS Naked	10-	AGS190	AGD196	
KYMCO	50	Bet & Win	02-07	AGS188	AGD194	
KYMCO	50	CX Super		AGS191	AGD197	
KYMCO	50	Dink 4T	07	AGS189	AGD195	
KYMCO	50	Dink 50	98-05	AGS191	AGD197	
KYMCO	50	Dink Classic	03	AGS188	AGD194	
KYMCO	50	Dink LC	98-03	AGS188	AGD194	
KYMCO	50	DJ 50R	03-07	AGS120	AGD128	
KYMCO	50	Fever ZX	99-04	AGS190	AGD196	
KYMCO	50	Filly	98-00	AGS190	AGD196	
KYMCO	50	K12		AGS191	AGD197	
KYMCO	50	KXR	04-05	AGS235	AGD245	
KYMCO	50	Like 2T	09-	AGS190	AGD196	
KYMCO	50	Like 4T	09-	AGS190	AGD196	
KYMCO	50	Maxxer	04-06	AGS235	AGD245	
KYMCO	50	MXER	04-05	AGS189	AGD248	
KYMCO	50	MXU	05-07	AGS189	AGD248	
KYMCO	50	MXU Reverse	06-07	AGS189	AGD248	
KYMCO	50	People	00-04	AGS190	AGD196	
KYMCO	50	People S	05-08	AGS190	AGD196	
KYMCO	50	People S 4T	06-	AGS190	AGD196	
KYMCO	50	Scout 50	98-02	AGS190	AGD196	
KYMCO	50	Sento	08-	AGS190	AGD196	
KYMCO	50	Super 8	07-	AGS190	AGD196	
KYMCO	50	Super 8 2T	09-	AGS190	AGD196	
KYMCO	50	Super 8 4T	09-	AGS190	AGD196	
KYMCO	50	Super 9 Sport	03-04	AGS190	AGD196	
KYMCO	50	Top Boy	97-00	AGS191	AGD197	
KYMCO	50	Vitality	04-07	AGS190	AGD196	
KYMCO	50	Yup	02-04	AGS191	AGD197	
KYMCO	90	KXR	04-07	AGS189	AGD245	
KYMCO	125	Active	04-07	-	AGD247	
KYMCO	125	Agility	05-08	AGS190	AGD196	
KYMCO	125	Agility 4T	06-	AGS190	AGD196	
KYMCO	125	Agility R16	09-	AGS188	AGD194	
KYMCO	125	Agility R16	09-	AGS189	AGD197	
KYMCO	125	Agility RS	09-	AGS190	AGD196	
KYMCO	125	Bet & Win	02-05	AGS188	AGD194	
KYMCO	125	Dink	06-07	AGS189	AGD195	
KYMCO	125	Dink	98-03	AGS189	AGD197	
KYMCO	125	Dink Classic	02-06	AGS188	AGD194	
KYMCO	125	Dink LX	98-06	AGS188	AGD194	
KYMCO	125	Downtown 125i	09-	AGS291	AGD296	
KYMCO	125	G-Dink	12-	AGS189	AGD195	
KYMCO	125	Grand Dink	06-07	AGS188	AGD194	
KYMCO	125	Grand Dink 125	01-04	AGS188	-	
KYMCO	125	Like	09-	AGS188	AGD196	
KYMCO	125	Like LX	12-	AGS188	AGD196	
KYMCO	125	Movie	00-07	AGS190	AGD196	
KYMCO	125	Movie XL	02-07	AGS190	AGD196	
KYMCO	125	MXER	03-07	AGS235	AGD248	
KYMCO	125	Nikita 125i	09-	AGS291	AGD296	
KYMCO	125	People	99-04	AGS190	AGD196	
KYMCO	125	People GTI	10-	AGS188	AGD194	

LEVE / levers

INDICE ANALITICO LEVE / levers index

MARCA Brand	**CC**	**MODELLO** Model	**ANNI** Years	**LEVA FRIZIONE** Clutch Lever	**LEVA FRENO** Brake Lever	**NOTE** Notes
KYMCO	125	People S	05-08	AGS190	AGD196	
KYMCO	125	People S DD Euro3	07-	AGS188	AGD196	
KYMCO	125	Quannon	08-	AGS290	AGD295	
KYMCO	125	Super 8	08-	AGS190	AGD196	
KYMCO	125	Super 8	08-	AGS190	AGD196	
KYMCO	125	SuperDink 125i	09-	AGS291	AGD296	
KYMCO	125	Vivio		AGS190	AGD196	
KYMCO	125	Zing II 125	03-07	AGS110	AGD122	
KYMCO	150	Agility R16	09-	AGS188	AGD194	
KYMCO	150	Agility R16	09-	AGS189	AGD197	
KYMCO	150	Bet & Win	00-05	AGS188	AGD194	
KYMCO	150	Dink	98-06	AGS189	AGD197	
KYMCO	150	Dink Classic	02-06	AGS188	AGD194	
KYMCO	150	Dink LX	98-06	AGS188	AGD194	
KYMCO	150	Grand Dink	01-04	AGS189	AGD197	
KYMCO	150	Grand Dink	06-07	AGS188	AGD194	
KYMCO	150	Movie	00-07	AGS190	AGD196	
KYMCO	150	Movie XL	02-07	AGS190	AGD196	
KYMCO	150	MXER	03-07	AGS235	AGD248	
KYMCO	150	MXU	05-07	AGS235	AGD248	
KYMCO	150	People 150	99-08	AGS190	AGD196	
KYMCO	150	Vivio		AGS190	AGD196	
KYMCO	200	Agility R16	12-	AGS188	-	
KYMCO	200	Dink	06-07	AGS189	AGD195	
KYMCO	200	Dink Classic	04-07	AGS188	AGD194	
KYMCO	200	Downtown	10-	AGS291	AGD296	
KYMCO	200	Like 200i	09-	AGS188	AGD196	
KYMCO	200	Like 200i	09-	AGS189	AGD197	
KYMCO	200	Like LX	12-	AGS188	AGD196	
KYMCO	200	Nikita	10-	AGS291	AGD296	
KYMCO	200	People GTI	10-	AGS188	AGD194	
KYMCO	200	People S	05-07	AGS190	AGD196	
KYMCO	200	People S 200i	07-	AGS188	AGD196	
KYMCO	200	SuperDink	10-	AGS291	AGD296	
KYMCO	250	Bet&Win 250	02-07	AGS188	AGD194	
KYMCO	250	Dink Classic 250i	07-08	AGS188	AGD194	
KYMCO	250	Grand Dink 250	02-07	AGS188	AGD194	
KYMCO	250	KXR	04-07	AGS189	AGD246	
KYMCO	250	MXU	04-07	AGS189	AGD246	
KYMCO	250	People LC	03-04	AGS188	AGD194	
KYMCO	250	People S	06-08	AGS188	AGD194	
KYMCO	250	Venox	04-07	AGS232	AGD243	
KYMCO	250	Xciting	05-08	AGS234	AGD244	
KYMCO	250	Xciting 250i	06-	AGS234	AGD244	
KYMCO	250	Yup Euro2	03-07	AGS188	AGD194	
KYMCO	300	Downtown 300i	09-	AGS291	AGD296	
KYMCO	300	G-Dink	12-	AGS189	AGD195	
KYMCO	300	Maxxer	05-07	AGS189	AGD246	
KYMCO	300	MXU	05-07	AGS189	AGD246	
KYMCO	300	Nikita 300i	09-	AGS291	AGD296	
KYMCO	300	People GTI	10-	AGS188	AGD194	
KYMCO	300	People GTI ABS	12-	AGS188	AGD194	
KYMCO	300	People S 300i	08-	AGS188	AGD194	
KYMCO	300	SuperDink 300i	09-	AGS291	AGD296	
KYMCO	300	Xciting 300i	08-	AGS291	AGD296	
KYMCO	300	Xciting 300i R	08-	AGS291	AGD296	
KYMCO	500	MXU	06-07	AGS189	AGD246	
KYMCO	500	MXUIRS 4x4	10-	AGS189	AGD246	
KYMCO	500	Xciting	06-09	AGS234	AGD244	
KYMCO	500	Xcitingi	06-	AGS234	AGD244	
KYMCO	500	Xcitingi R	07-	AGS234	AGD244	

ACCOSSATO

LEVE / levers

INDICE ANALITICO LEVE / levers index

MARCA Brand	CC	MODELLO Model	ANNI Years	LEVA FRIZIONE Clutch Lever	LEVA FRENO Brake Lever	NOTE Notes
KYMCO	500	XcitingR	09-	AGS234	AGD244	
KYMCO	700	MyRoad 700i	08-	AGS291	AGD296	
LML	125	Star 2T Bicolor Ltd. Ed.	09-	AGDS623	AGD261	
LML	125	Star 2T Classic	09-	AGDS623	AGD261	
LML	125	Star 2T Prestige	09-	AGDS623	AGD261	
LML	125	Star 2T Vintage	09-	AGDS623	AGD261	
LML	125	Star 4T Classic	09-	AGDS623	AGD261	
LML	125	Star 4T Matt Series	10-	AGDS623	AGD261	
LML	125	Star 4T Prestige	09-	AGDS623	AGD261	
LML	125	Star 4T Vintage	09-	AGDS623	AGD261	
LML	150	Star 2T Bicolor Ltd. Ed.	09-	AGDS623	AGD261	
LML	150	Star 2T Classic	09-	AGDS623	AGD261	
LML	150	Star 2T Prestige	09-	AGDS623	AGD261	
LML	150	Star 2T Vintage	09-	AGDS623	AGD261	
LML	150	Star 4T Classic	09-	AGDS623	AGD261	
LML	150	Star 4T Prestige	09-	AGDS623	AGD261	
LML	150	Star 4T Vintage	09-	AGDS623	AGD261	
LML	200	Star 200i	10-	AGDS623	AGD261	
MALAGUTI	50	Centro SL	94-98	AGS39	AGDS615	
MALAGUTI	50	Centro SL Kat	99-00	AGS39	AGDS615	
MALAGUTI	50	Ciak	99-00	AGS39	AGDS615	
MALAGUTI	50	Ciak Master	04	AGS39	AGDS615	
MALAGUTI	50	Ciak Master 4T	05-06	AGS39	AGDS615	
MALAGUTI	50	Ciak Master Euro2	06	AGS39	AGDS615	
MALAGUTI	50	Ciak Mono 2.3 Euro2	03	AGS39	AGDS615	
MALAGUTI	50	Ciak Mono Euro2	03	AGS39	AGDS615	
MALAGUTI	50	Ciak TD	00-01	AGDS615	AGDS615	
MALAGUTI	50	Crosser CR1	95-98	AGS39	AGDS615	
MALAGUTI	50	F10 AC	08-	AGS39	AGDS615	
MALAGUTI	50	F10 AC Eco	09-	AGS39	AGDS615	
MALAGUTI	50	F10 Jet Line	92-98	AGS39	AGDS615	
MALAGUTI	50	F10 Kat	99-00	AGS39	AGDS615	
MALAGUTI	50	F10 Restyling	01-06	AGS39	AGDS615	
MALAGUTI	50	F12 AC Restyling	06	AGS39	AGDS615	
MALAGUTI	50	F12 Phantom AC	94-00	AGS39	AGDS615	
MALAGUTI	50	F12 Phantom LC	94-98	AGS39	AGDS615	
MALAGUTI	50	F12 Phantom LC	99-04	AGDS615	AGDS615	
MALAGUTI	50	F12 Phantom LC Twin Disks	98	AGDS615	AGDS615	
MALAGUTI	50	F12 Phantom Restyling	01-04	AGS39	AGDS615	
MALAGUTI	50	F12R Phantom AC	07-	AGDS615	AGDS615	
MALAGUTI	50	F12R Phantom LC	07-	AGDS615	AGDS615	
MALAGUTI	50	F15 Fire Fox	02-03	AGDS615	AGDS615	
MALAGUTI	50	F15 Fire Fox	96-98	AGS39	AGDS615	
MALAGUTI	50	F15 Fire Fox AC	05-06	AGS39	AGDS615	
MALAGUTI	50	F15 Fire Fox LC RST	01-05	AGDS615	AGDS615	
MALAGUTI	50	F15 Fire Fox Restyling	03-04	AGDS615	AGDS615	
MALAGUTI	50	F15 Fire Fox Special	98-99	AGDS615	AGDS615	
MALAGUTI	50	F15 Fire Fox TDS RST	01	AGDS615	AGDS615	
MALAGUTI	50	F15 Fire Fox Twin Disks	98-99	AGDS615	AGDS615	
MALAGUTI	50	F15 Fire Fox Twin Disks Digit Kat	98-00	AGDS615	AGDS615	
MALAGUTI	50	Yesterday	97-00	AGS39	AGDS615	
MALAGUTI	100	Ciak	99-00	AGDS615	AGDS615	
MALAGUTI	100	F12 Phantom	99-00	AGDS615	AGDS615	
MALAGUTI	125	Ciak	00-01	AGS39	AGDS615	
MALAGUTI	125	Ciak Master	04-05	AGS39	AGDS615	
MALAGUTI	125	Ciak Master Euro3	06-	AGS39	AGDS615	
MALAGUTI	125	Ciak Restyling	03	AGS39	AGDS615	
MALAGUTI	125	F18 Warrior	00-02	AGDS615	AGDS615	
MALAGUTI	125	Madison	99-01	AGDS617	AGDS617	
MALAGUTI	125	Madison 3	06-	AGDS617	AGDS617	
MALAGUTI	125	Madison R Restyling	02-04	AGDS617	AGDS617	

LEVE / levers

INDICE ANALITICO LEVE / levers index

MARCA Brand	CC	MODELLO Model	ANNI Years	LEVA FRIZIONE Clutch Lever	LEVA FRENO Brake Lever	NOTE Notes
MALAGUTI	125	Phantom Max	03	AGDS617	AGDS617	
MALAGUTI	150	Ciak	00-02	AGS39	AGDS615	
MALAGUTI	150	Ciak Master	04	AGS39	AGDS615	
MALAGUTI	150	Ciak Restyling Euro2	03	AGS39	AGDS615	
MALAGUTI	150	F18 Warrior	00-02	AGDS615	AGDS615	
MALAGUTI	150	Madison T	99-01	AGDS617	AGDS617	
MALAGUTI	180	Madison R	01-02	AGDS617	AGDS617	
MALAGUTI	200	Ciak Master Euro2	06	AGS39	AGDS615	
MALAGUTI	200	Madison S Restyling	02-03	AGDS617	AGDS617	
MALAGUTI	200	Phantom Max	03	AGDS617	AGDS617	
MALAGUTI	250	Madison 3	06-	AGDS617	AGDS617	
MALAGUTI	250	Madison RS Restyling	04	AGDS617	AGDS617	
MALAGUTI	250	Madison S	99-01	AGDS617	AGDS617	
MALAGUTI	250	Password	05-08	AGDS617	AGDS617	
MALAGUTI	250	Phantom Max	04	AGDS617	AGDS617	
MALAGUTI	400	Madison K	02	AGDS617	AGDS617	
MALAGUTI	400	Madison K	02-04	AGDS617	AGDS617	
MALAGUTI	500	Spidermax GT	04-06	AGDS617	AGDS617	
MALAGUTI	500	Spidermax RS	08-	AGDS617	AGDS617	
MALAGUTI		Ciak Elettrico	00-01	AGS39	AGDS615	
MBK	50	CS Mach G	02-07	AGS64	AGD121	
MBK	50	CW Booster	04	AGS64	AGD163	
MBK	50	CW Booster	95-98	AGS162	AGD172	
MBK	50	CW Booster Naked	03	AGS64	AGD233	
MBK	50	CW Booster Spirit	96-98	AGS64	AGD233	
MBK	50	CW Booster Spirit	99-00	AGS158	AGD163	
MBK	50	CW RS Booster NG	01-05	AGS64	AGD163	
MBK	50	CW RS Booster NG	99-00	AGS158	AGD163	
MBK	50	EW Stunt	00-04	AGS64	AGD163	
MBK	50	X-Limit Enduro	04-09	AGS92	AGD143	
MBK	50	X-Limit SM	04-09	AGS92	AGD143	
MBK	50	YN R Ovetto	97-03	AGS67	AGD78	
MBK	50	YQ Nitro	01-08	AGDS603	AGDS603	
MBK	50	YQ Nitro	09-	AGDS628	AGDS628	
MBK	100	YN Ovetto	00-02	AGS67	AGD78	
MBK	100	YQ Nitro	00-02	-	AGD185	
MBK	100	YW Booster	99-01	AGS102	AGD116	
MBK	125	NXC Flame X	10-13	AGS79	AGD307	
MBK	125	NXC Flame X	04-09	AGS79	AGD88	
MBK	125	X-Over	10-	AGS102	AGD116	
MBK	125	XC Flame K	96-99	AGS80	AGD89	
MBK	125	XC Flame R	00-03	AGS80	AGD89	
MBK	125	XN Doodo	00-01	AGDS606	AGDS606	
MBK	125	XQ Thunder	01-03	AGDS606	AGDS606	
MBK	125	YP R Skycruiser	06-	AGS216	AGD222	
MBK	125	YP Skyliner	98-07	AGDS606	AGDS606	
MBK	150	XQ Thunder	01-03	AGDS606	AGDS606	
MBK	150	YP Skyliner	01-03	AGDS606	AGDS606	
MBK	250	YP R Skycruiser	06-	AGS216	AGD222	
MBK	300	XC Kilibre	03-	AGDS606	AGDS606	
MONTESA	175	Impala Sport 3M		AGS165	AGD188	
MONTESA	250	Enduro		AGS163	AGD186	Tipo Amal
MONTESA	250	Impala		AGS165	AGD188	
MONTESA	315	Cota 315R		AGS161	AGD171	Grimeca
MONTESA	315	Cota 315R		AGS161	AGD153	
MOTO GUZZI	750	Breva	03-07	-	AGD199	Brembo
MOTO GUZZI	750	Nevada 750S	10-	-	AGD199	Brembo
MOTO GUZZI	750	Nevada Aquila Nera	09-	-	AGD199	Brembo
MOTO GUZZI	750	Nevada Classic	04-07	-	AGD199	Brembo
MOTO GUZZI	750	Nevada Classic	09-	-	AGD199	Brembo
MOTO GUZZI	750	V7 Café Classic	09-	-	AGD199	Brembo

ACCOSSATO

LEVE / levers

INDICE ANALITICO LEVE / levers index

MARCA Brand	CC	MODELLO Model	ANNI Years	LEVA FRIZIONE Clutch Lever	LEVA FRENO Brake Lever	NOTE Notes
MOTO GUZZI	750	V7 Classic	08-	-	AGD199	Brembo
MOTO GUZZI	750	V7 Racer	12-	-	AGD199	
MOTO GUZZI	750	V7 Special	12-	-	AGD199	
MOTO GUZZI	750	V7 Stone	12-	-	AGD199	
MOTO GUZZI	850	Breva	06-07	AGS201	AGD221	Brembo
MOTO GUZZI	850	Griso	06-07	AGS201	AGD221	Brembo
MOTO GUZZI	850	Norge	07-	AGS201	AGD221	Brembo
MOTO GUZZI	940	Aquila Nera	07-	AGS201	AGD221	Brembo
MOTO GUZZI	940	Bellagio	07-	AGS201	AGD221	Brembo
MOTO GUZZI	1100	Breva	05-07	AGS201	AGD221	Brembo
MOTO GUZZI	1100	California Aluminium/Titanium	04-05	-	AGD199	Brembo
MOTO GUZZI	1100	California Aquila Nera	10-	-	AGD199	Brembo
MOTO GUZZI	1100	California Classic	06-	-	AGD199	Brembo
MOTO GUZZI	1100	California EV/EV Touring	03-05	-	AGD199	Brembo
MOTO GUZZI	1100	California EV/Sport/Stone	01-02	-	AGD199	Brembo
MOTO GUZZI	1100	California Special Sport/Alu.	02-03	-	AGD199	Brembo
MOTO GUZZI	1100	California Stone	04-05	-	AGD199	Brembo
MOTO GUZZI	1100	California Stone/Metal	02-03	-	AGD199	Brembo
MOTO GUZZI	1100	California Touring	06-	-	AGD199	Brembo
MOTO GUZZI	1100	California Vintage	06-	-	AGD199	Brembo
MOTO GUZZI	1100	Griso	05-08	AGS201	AGD221	Brembo
MOTO GUZZI	1200	Breva	08-	AGS201	AGD221	Brembo
MOTO GUZZI	1200	Griso 8V	07-	AGS201	AGD221	Brembo
MOTO GUZZI	1200	Griso 8V Special Ed.	07-	AGS201	AGD221	Brembo
MOTO GUZZI	1200	Norge	06-09	AGS201	AGD221	Brembo
MOTO GUZZI	1200	Norge GT8V	10-	AGS201	AGD221	Brembo
MOTO GUZZI	1200	Sport	06-08	AGS201	AGD221	Brembo
MOTO GUZZI	1200	Sport 4V ABS	09-	AGS201	AGD221	Brembo
MOTO GUZZI	1200	Stelvio	08	AGS201	AGD221	Brembo
MOTO GUZZI	1200	Stelvio NTX ABS	09-	AGS201	AGD221	Brembo
MOTO GUZZI	1225	MGS-01 Corsa	04-	AGS199	AGD208	
MOTO GUZZI	1225	MGS-01 Corsa	04-	AGS200	AGD209	
MOTO GUZZI	1400	California Touring ABS	13-15	AGS16	AGD13	
MOTO MORINI	1200	9 1/2	07-	AGS201	AGD221	
MOTO MORINI	1200	Corsaro	05-06	AGS201	AGD221	
MOTO MORINI	1200	Corsaro	07-	AGS199	AGD208	
MOTO MORINI	1200	Corsaro Carbon	07-	AGS201	AGD208	
MOTO MORINI	1200	Corsaro Sport	08-	AGS201	AGD221	
MOTO MORINI	1200	Corsaro Veloce	07-	AGS199	AGD208	
MOTO MORINI	1200	Granpasso	08-	AGS199	AGD208	
MOTO MORINI	1200	Scrambler	09-	AGS201	AGD221	
MOTORHISPANIA	50	Furia		AGS166	AGD161	
MOTORHISPANIA	50	Furia Max		AGS56	AGDS602	
MOTORHISPANIA	50	RX R		AGS55	AGD288	AJP
MOTORHISPANIA	50	RYZ Pro Racing		AGS55	AGD288	AJP
MOTORHISPANIA	50	RYZ Standard		AGS56	AGDS602	
MOTORHISPANIA	125	Duna Dual Plus Trail		AGS56	AGDS602	
MOTORHISPANIA	125	Duna Hard Road Eco		AGS56	AGDS602	
MOTORHISPANIA	125	Duna Hard Road Enduro		AGS56	AGDS602	
MOTORHISPANIA	125	Duna Revolution	10-	AGS55	AGD288	AJP
MOTORHISPANIA	125	Duna Sport City SM		AGS55	AGD288	AJP
MOTORHISPANIA	125	KN1 AC		AGS55	AGD288	AJP
MOTORHISPANIA	125	KN1 LC		AGS91	AGD288	AJP
MOTORHISPANIA	125	MH7 Naked AC		AGS55	AGD288	AJP
MOTORHISPANIA	125	MH7 Naked LC		AGS91	AGD288	AJP
MOTORHISPANIA	125	RX R		AGS91	AGD288	AJP
MTR	50	Canarias		AGS246	AGD242	
MTR	50	Fire		AGS246	-	
MTR	50	Go!		AGS246	-	
MTR	50	On		AGS246	-	
MTR	125	Aspe		AGS246	-	

LEVE / levers

INDICE ANALITICO LEVE / levers index

MARCA Brand	**CC**	**MODELLO** Model	**ANNI** Years	**LEVA FRIZIONE** Clutch Lever	**LEVA FRENO** Brake Lever	**NOTE** Notes
MTR	**125**	**Bolero i**		**-**	**AGD261**	
MTR	**125**	**Brooklyn**		**AGS05**	**AGD51**	
MTR	**125**	**Gomera**		**AGS246**	**-**	
MTR	**125**	**Houston**	**07-**	**AGS05**	**AGD276**	
MTR	**125**	**Mallorca**		**-**	**AGD51**	
MTR	**125**	**Mallorca Race**		**-**	**AGD51**	
MTR	**125**	**Mallorca Surf**		**-**	**AGD51**	
MTR	**125**	**Naked M1**		**AGS232**	**AGD276**	
MTR	**125**	**Tenerife DT**	**06**	**AGS172**	**-**	
MTR	**125**	**Thunder**		**AGS197**	**AGD134**	
MTR	**125**	**Thunder**		**AGS151**	**AGD164**	
MTR	**125**	**Volcano**		**AGS122**	**AGD52**	
MTR	**250**	**Brooklyn**		**AGS05**	**AGD51**	
MTR	**250**	**Houston**	**07-**	**AGS05**	**AGD276**	
PEUGEOT	**50**	**103 MTV E**		**AGDS613**	**AGDS613**	
PEUGEOT	**50**	**103 ZT E**		**AGDS613**	**AGDS613**	
PEUGEOT	**50**	**206 WRC**		**AGDS637**	**AGDS637**	
PEUGEOT	**50**	**Blaster Furious 2T**	**10-**	**AGDS625**	**AGDS625**	**AJP**
PEUGEOT	**50**	**Buxy**		**AGS44**	**AGD193**	**Brembo**
PEUGEOT	**50**	**Buxy**		**AGS44**	**AGD40**	
PEUGEOT	**50**	**Buxy R**		**AGS44**	**AGD40**	
PEUGEOT	**50**	**Elyseo**		**AGDS605**	**AGD48**	**Grip CLB - Hengtong**
PEUGEOT	**50**	**Elyseo**		**AGDS625**	**AGDS625**	**AJP**
PEUGEOT	**50**	**FOX**		**AGDS613**	**AGDS613**	
PEUGEOT	**50**	**Furious**		**AGS43**	**-**	
PEUGEOT	**50**	**Jet C-Tech 2T**	**08-**	**AGDS625**	**AGDS625**	**AJP**
PEUGEOT	**50**	**Jet Force**		**AGDS625**	**AGDS625**	
PEUGEOT	**50**	**Jet Force H2i**	**09-**	**AGDS625**	**AGDS625**	**AJP**
PEUGEOT	**50**	**Kisbee 4T**	**10-**	**AGS167**	**-**	
PEUGEOT	**50**	**Kisbee RS 4T**	**10-**	**AGS167**	**-**	
PEUGEOT	**50**	**Looxor**		**AGS44**	**AGD48**	**Hengtong**
PEUGEOT	**50**	**Looxor**		**AGS44**	**AGDS625**	**AJP**
PEUGEOT	**50**	**Ludix 10 Blaster**		**AGS44**	**AGDS625**	
PEUGEOT	**50**	**Ludix 10 One**		**AGS247**	**AGD260**	
PEUGEOT	**50**	**Ludix 10 Snake**		**AGS44**	**AGDS625**	
PEUGEOT	**50**	**Ludix 10 Trend**		**AGS44**	**AGDS625**	
PEUGEOT	**50**	**Ludix 14 Classic**		**AGS247**	**AGD260**	
PEUGEOT	**50**	**Ludix 14 Elegance**		**AGS44**	**AGDS625**	
PEUGEOT	**50**	**Metal-X 50**		**AGS43**	**-**	
PEUGEOT	**50**	**Rapido 50**		**AGDS613**	**AGDS613**	
PEUGEOT	**50**	**Speedake 50**		**AGS44**	**AGD193**	**Brembo**
PEUGEOT	**50**	**Speedake 50**		**AGS44**	**AGD40**	
PEUGEOT	**50**	**Speedfight 3 AC**	**09-**	**AGS167**	**AGDS625**	
PEUGEOT	**50**	**Speedfight 3 LC**	**09-**	**AGDS625**	**AGDS625**	
PEUGEOT	**50**	**Speedfight 3 LC Darkside**	**10-**	**AGDS625**	**AGDS625**	**AJP**
PEUGEOT	**50**	**Speedfight 3 LC Le Mans**	**10-**	**AGDS625**	**AGDS625**	**AJP**
PEUGEOT	**50**	**Speedfight 3 RS**	**09-**	**AGDS625**	**AGDS625**	
PEUGEOT	**50**	**Speedfight I**		**AGS44**	**AGD48**	**Grimeca**
PEUGEOT	**50**	**Speedfight I**		**AGDS625**	**AGDS625**	**AJP. Disco-Disc**
PEUGEOT	**50**	**Speedfight I**		**AGS44**	**AGDS625**	**AJP. Disco-Tamburo** /Disc-Drum
PEUGEOT	**50**	**Speedfight II 307 WRC**		**AGDS637**	**AGDS637**	**Hengtong**
PEUGEOT	**50**	**Speedfight II 50N**		**AGDS625**	**AGDS625**	**AJP. Disco-Disc**
PEUGEOT	**50**	**Speedfight II 50N**		**AGS44**	**AGDS625**	**AJP. Disco-Tamburo** /Disc-Drum
PEUGEOT	**50**	**Speedfight II X-Race LC**		**AGDS637**	**AGDS637**	**AJP**
PEUGEOT	**50**	**Squab**		**AGS44**	**AGD48**	**Hengtong**
PEUGEOT	**50**	**Squab**		**AGS44**	**AGDS625**	**AJP**
PEUGEOT	**50**	**ST**		**AGDS613**	**AGDS613**	
PEUGEOT	**50**	**STL**		**AGDS613**	**AGDS613**	
PEUGEOT	**50**	**STL2**		**AGDS613**	**AGDS613**	
PEUGEOT	**50**	**STL3**		**AGDS613**	**AGDS613**	
PEUGEOT	**50**	**SV**		**AGS44**	**AGD21**	**Domino**

ACCOSSATO

LEVE / levers

INDICE ANALITICO LEVE / levers index

MARCA Brand	CC	MODELLO Model	ANNI Years	LEVA FRIZIONE Clutch Lever	LEVA FRENO Brake Lever	NOTE Notes
PEUGEOT	50	SVJ		AGS44	AGD113	
PEUGEOT	50	SVL		AGS44	AGDS625	AJP
PEUGEOT	50	TKR 206 WRC		AGS43	-	
PEUGEOT	50	TKR Furious	10-	AGDS637	AGDS637	
PEUGEOT	50	Trekker		AGS44	AGD48	Hengtong
PEUGEOT	50	Trekker		AGS44	AGDS625	AJP
PEUGEOT	50	Tweet	09-	AGS190	AGD297	
PEUGEOT	50	Vivacity	-08	AGS44	AGDS625	AJP
PEUGEOT	50	Vivacity	-08	AGS44	AGD48	Grimeca
PEUGEOT	50	Vivacity 2T	09-	AGS167	AGDS625	
PEUGEOT	50	Vivacity 2T	10-	AGS167	AGDS625	Sportline
PEUGEOT	50	Vivacity 4T	10-	AGS167	AGDS625	
PEUGEOT	50	Vivacity Sixties	10-	AGS167	AGDS625	
PEUGEOT	50	VOG S2		AGDS613	AGDS613	
PEUGEOT	50	X-Fight AC		-	AGD50	Hengtong
PEUGEOT	50	X-Fight LC		AGDS625	AGDS625	AJP
PEUGEOT	50	XPS T Enduro		AGS64	AGDS602	
PEUGEOT	50	XPS T Supermotard		AGS64	AGDS602	
PEUGEOT	50	XRS E Racing		AGS64	AGD129	
PEUGEOT	50	Zenith L		AGS44	AGD193	Brembo
PEUGEOT	50	Zenith L		AGS44	AGD40	
PEUGEOT	50	Zenith LM		AGS44	AGD113	
PEUGEOT	50	Zenith LM		AGS44	AGDS625	AJP
PEUGEOT	50	Zenith M		AGS44	AGD113	
PEUGEOT	50	Zenith M		AGS44	AGDS625	AJP
PEUGEOT	75	SVJ		AGS44	AGD113	
PEUGEOT	80	SV		AGS44	AGD113	
PEUGEOT	100	Elyseo		AGDS625	AGDS625	AJP
PEUGEOT	100	Speedfight		AGS44	AGDS625	AJP
PEUGEOT	100	Speedfight		AGDS625	AGDS625	AJP. Disco-Disc
PEUGEOT	100	Trekker		AGS44	AGDS625	AJP
PEUGEOT	100	Vivacity		AGS44	AGDS625	AJP
PEUGEOT	125	Elyseo		AGDS600	AGDS600	
PEUGEOT	125	Elyseo		AGDS625	AGDS625	AJP
PEUGEOT	125	GEO RS		AGS150	AGD49	
PEUGEOT	125	GEO RS	10-	AGDS626	AGDS626	
PEUGEOT	125	Geopolis		AGS150	AGD49	
PEUGEOT	125	Jet Force		AGDS600	AGDS600	
PEUGEOT	125	Satelis	10-	AGS150	AGD49	
PEUGEOT	125	Satelis 4T-4V		AGDS626	AGDS626	
PEUGEOT	125	Satelis Compressor	06-	AGDS626	AGDS626	
PEUGEOT	125	Satelis GT Sport	10-	AGS150	AGD49	
PEUGEOT	125	Satelis K Black Sat	08-	AGDS626	AGDS626	
PEUGEOT	125	Satelis RS	06-	AGDS626	AGDS626	
PEUGEOT	125	Satelis WhiteSat	10-	AGDS626	AGDS626	AJP
PEUGEOT	125	SV		AGS44	AGD113	
PEUGEOT	125	SV L		AGS44	AGDS625	AJP
PEUGEOT	125	Tweet	09-	AGS305	AGD297	
PEUGEOT	150	Elyseo		AGDS600	AGDS600	
PEUGEOT	150	Elyseo		AGDS625	AGDS625	AJP
PEUGEOT	250	GEO RS		AGS150	AGD49	
PEUGEOT	250	Geopolis		AGS150	AGD49	
PEUGEOT	250	Satelis		AGDS626	AGDS626	
PEUGEOT	250	Satelis RS		AGDS626	AGDS626	
PEUGEOT	250	Satelis RS	10-	AGS150	AGD49	
PEUGEOT	400	GEO RS		AGS150	AGD49	
PEUGEOT	400	Geopolis		AGS150	AGD49	
PEUGEOT	400	Satelis		AGDS626	AGDS626	
PEUGEOT	400	Satelis RS		AGDS626	AGDS626	
PEUGEOT	500	GEO		AGS150	AGD49	
PEUGEOT	500	Satelis		AGDS626	AGDS626	

LEVE / levers

INDICE ANALITICO LEVE / levers index

MARCA Brand	**CC**	**MODELLO** Model	**ANNI** Years	**LEVA FRIZIONE** Clutch Lever	**LEVA FRENO** Brake Lever	**NOTE** Notes
PEUGEOT	**500**	**Satelis RS**		**AGDS626**	**AGDS626**	
PEUGEOT	**-**	**E-Vivacity**	**10-**	**AGS167**	**AGDS625**	
PGO	**125**	**Big Max**	**08-**	**AGS274**	**AGDS634**	
PIAGGIO	**50**	**Easy Moving 50**		**AGS41**	**AGD67**	
PIAGGIO	**50**	**Fly 2T**	**05-07**	**AGS71**	**AGDS616**	
PIAGGIO	**50**	**Fly 4T**	**05-08**	**AGS71**	**AGDS616**	**Grimeca**
PIAGGIO	**50**	**Fly 4T**	**05-08**	**AGS71**	**AGDS611**	**Hengtong**
PIAGGIO	**50**	**Free**		**AGS42**	**AGD54**	
PIAGGIO	**50**	**Free FL**	**95-02**	**AGS41**	**AGD156**	
PIAGGIO	**50**	**Hexagon 4T LX4**		**AGS71**	**AGDS616**	
PIAGGIO	**50**	**Hexagon 4T LX4**		**AGS72**	**AGD115**	
PIAGGIO	**50**	**Hexagon LX**		**AGS72**	**AGD115**	
PIAGGIO	**50**	**Liberty**	**97-05**	**AGS180**	**AGD47**	**Grimeca**
PIAGGIO	**50**	**Liberty**	**97-05**	**AGS180**	**AGD47**	**Hengtong**
PIAGGIO	**50**	**Liberty 2T**	**06-08**	**AGS71**	**AGDS616**	**Grimeca**
PIAGGIO	**50**	**Liberty 2T**	**06-08**	**AGS71**	**AGDS611**	**Hengtong**
PIAGGIO	**50**	**Liberty 2T RST**	**04**	**AGS71**	**AGDS611**	
PIAGGIO	**50**	**Liberty 2T Sport**	**06-08**	**AGS71**	**AGDS616**	
PIAGGIO	**50**	**Liberty 4T**	**00-02**	**AGS180**	**AGD47**	**Grimeca**
PIAGGIO	**50**	**Liberty 4T Delivery TNT**	**09-**	**AGDS611**	**AGDS611**	
PIAGGIO	**50**	**Liberty 4T RST**	**04**	**AGS71**	**AGDS616**	
PIAGGIO	**50**	**Liberty 4T RST**	**05-06**	**AGS71**	**AGDS616**	**Grimeca**
PIAGGIO	**50**	**Liberty 4T RST**	**05-06**	**AGS71**	**AGDS611**	**Hengtong**
PIAGGIO	**50**	**Liberty 4T Sport**	**06-08**	**AGS71**	**AGDS616**	**Grimeca**
PIAGGIO	**50**	**Liberty 4T Sport**	**06-08**	**AGS71**	**AGDS611**	**Hengtong**
PIAGGIO	**50**	**Liberty MOC 2T**	**09-**	**AGDS611**	**AGDS611**	**Hengtong**
PIAGGIO	**50**	**Liberty MOC 4T**	**09-**	**AGDS611**	**AGDS611**	**Hengtong**
PIAGGIO	**50**	**NRG**	**94-96**	**AGS41**	**AGD156**	
PIAGGIO	**50**	**NRG 50**		**AGDS612**	**AGDS612**	**Disco-Disco**
PIAGGIO	**50**	**NRG 50**		**AGS41**	**AGDS612**	**Disco-Tamburo** / Disc-Drum
PIAGGIO	**50**	**NRG Extreme**	**99-00**	**AGS72**	**AGDS612**	
PIAGGIO	**50**	**NRG Extreme**		**AGDS612**	**AGDS612**	**Disco-Disco**
PIAGGIO	**50**	**NRG mc³**	**01-04**	**AGDS612**	**AGDS612**	**Grimeca**
PIAGGIO	**50**	**NRG mc³**	**01-04**	**AGDS605**	**AGDS605**	**Hengtong**
PIAGGIO	**50**	**NRG mc³**		**AGS72**	**AGDS612**	**Disco-Tamburo** / Disc-Drum
PIAGGIO	**50**	**NRG Power DD**	**05-09**	**AGDS611**	**AGDS611**	
PIAGGIO	**50**	**NRG Power DT**	**05**	**AGS72**	**AGDS612**	
PIAGGIO	**50**	**NRG Power DT**	**05-08**	**AGS71**	**AGDS616**	**Grimeca**
PIAGGIO	**50**	**NRG Power DT**	**05-08**	**AGS71**	**AGDS611**	**Hengtong**
PIAGGIO	**50**	**NRG Power Purejet**	**06**	**AGDS611**	**AGDS611**	
PIAGGIO	**50**	**NRG Power Purejet**	**02-05**	**AGDS605**	**AGDS605**	**Hengtong**
PIAGGIO	**50**	**NRG Purejet**	**02-04**	**AGDS612**	**AGDS612**	**Grimeca**
PIAGGIO	**50**	**NRG RST mc²**	**96-98**	**AGDS612**	**AGDS612**	
PIAGGIO	**50**	**NTT**		**AGS41**	**AGDS612**	
PIAGGIO	**50**	**Quartz**	**92-96**	**AGS41**	**AGD67**	
PIAGGIO	**50**	**Typhoon**	**01-04**	**AGS41**	**AGD156**	
PIAGGIO	**50**	**Typhoon**	**05-09**	**AGS71**	**AGDS611**	
PIAGGIO	**50**	**Typhoon**	**09-**	**AGS71**	**AGDS611**	
PIAGGIO	**50**	**Typhoon 50**		**AGS41**	**AGD156**	
PIAGGIO	**50**	**Typhoon 50 RST**		**AGS41**	**AGD156**	
PIAGGIO	**50**	**Typhoon 50 X**		**AGS41**	**AGD156**	
PIAGGIO	**50**	**Typhoon 50 XR**		**AGS41**	**AGD156**	
PIAGGIO	**50**	**Typhoon mc²**		**AGDS612**	**AGDS612**	
PIAGGIO	**50**	**Velofax**		**AGS42**	**AGD54**	
PIAGGIO	**50**	**Vespa**	**67-82**	**AGS164**	**AGD169**	
PIAGGIO	**50**	**Vespa ET2**	**97-05**	**AGS180**	**AGD47**	
PIAGGIO	**50**	**Vespa ET2 Iniezione**	**97-00**	**AGS180**	**AGD47**	
PIAGGIO	**50**	**Vespa ET4**	**00-06**	**AGS180**	**AGD47**	**Grimeca**
PIAGGIO	**50**	**Vespa ET4**	**00-06**	**AGS180**	**AGD47**	**Hengtong**
PIAGGIO	**50**	**Vespa FL**	**90**	**AGS18**	**AGD216**	
PIAGGIO	**50**	**Vespa FL2**	**90-91**	**AGS18**	**AGD216**	**Automatico-Authomatic**

ACCOSSATO

LEVE / levers

INDICE ANALITICO LEVE / levers index

MARCA Brand	CC	MODELLO Model	ANNI Years	LEVA FRIZIONE Clutch Lever	LEVA FRENO Brake Lever	NOTE Notes
PIAGGIO	50	Vespa FL2 HP	91-97	AGS18	AGD216	
PIAGGIO	50	Vespa LX 2T	05-09	AGS71	AGDS611	
PIAGGIO	50	Vespa LX 2T FL	09-	AGS71	AGDS611	
PIAGGIO	50	Vespa LX 4T	05-09	AGS71	AGDS611	
PIAGGIO	50	Vespa LX 4T-4V	09-	AGS71	AGDS611	
PIAGGIO	50	Vespa LXV 2T	06-	AGS128	AGDS611	
PIAGGIO	50	Vespa LXV 2T Navy	08-	AGS128	AGDS611	
PIAGGIO	50	Vespa PK	82-84	AGS159	-	
PIAGGIO	50	Vespa PK	84-89	AGS159	-	Automatico-Authomatic
PIAGGIO	50	Vespa PK XL	85-88	AGS159	-	
PIAGGIO	50	Vespa PK XL	85-90	AGS159	-	Plurimatic
PIAGGIO	50	Vespa Primavera 2T	13-15	AGS71	AGDS611	
PIAGGIO	50	Vespa Primavera 4T-4V	13-15	AGS71	AGDS611	
PIAGGIO	50	Vespa S 2T	07-	AGDS611	AGDS611	
PIAGGIO	50	Vespa S 4T-4V	08-	AGDS611	AGDS611	
PIAGGIO	50	Vespa S 4T-4V College	10-	AGDS611	AGDS611	
PIAGGIO	50	Vespa Sprint 2T-2V	14-15	AGS71	AGDS611	
PIAGGIO	50	Vespa Sprint 4T-4V	14-15	AGS71	AGDS611	
PIAGGIO	50	Vespa Vintage	67-82	AGS164	AGD169	
PIAGGIO	50	Vespino		AGS164	AGD169	
PIAGGIO	50	Vespino AL		AGS159	-	
PIAGGIO	50	Vespino ALX		AGS159	-	
PIAGGIO	50	Vespino GL		AGS164	AGD169	
PIAGGIO	50	Vespino SC		-	AGD227	
PIAGGIO	50	Vespino XE		AGS159	-	
PIAGGIO	50	Zip	00-04	AGS72	AGDS612	
PIAGGIO	50	Zip	92-94	AGS42	AGD54	
PIAGGIO	50	Zip & Zip		AGS42	AGD54	
PIAGGIO	50	Zip 4T	06	AGS72	AGDS612	Grimeca
PIAGGIO	50	Zip 4T	06	AGS72	AGDS605	Hengtong
PIAGGIO	50	Zip 4T	00-05	AGS72	AGDS612	
PIAGGIO	50	Zip 50	92-94	AGS42	AGD54	
PIAGGIO	50	Zip Fast Rider	93-94	AGS41	AGD67	
PIAGGIO	50	Zip Fast Rider RST	95-97	AGS41	AGD67	
PIAGGIO	50	Zip RST		AGS41	AGDS612	
PIAGGIO	50	Zip RST	96-99	AGS41	AGD67	Freno Disco / Disc Brake
PIAGGIO	50	Zip SP	01-04	AGS72	AGDS612	Grimeca
PIAGGIO	50	Zip SP	01-04	AGS72	AGDS605	Hengtong
PIAGGIO	50	Zip SP	96-00	AGS41	AGD67	
PIAGGIO	50	Zip SP Euro2	05-	AGS72	AGDS605	Hengtong
PIAGGIO	80	Quartz		AGS41	AGD67	
PIAGGIO	80	Typhoon		AGS41	AGDS612	
PIAGGIO	100	Fly 4T	06-08	AGS71	AGDS616	Grimeca
PIAGGIO	100	Fly 4T	06-08	AGS71	AGDS611	Hengtong
PIAGGIO	100	Free	02-03	AGS41	AGD156	
PIAGGIO	100	Zip 4T	06	AGS72	AGDS612	Grimeca
PIAGGIO	100	Zip 4T	06	AGS72	AGDS605	Hengtong
PIAGGIO	125	Beverly	07	AGDS610	AGDS610	Hengtong
PIAGGIO	125	Beverly	01-03	AGDS606	AGDS606	Grimeca
PIAGGIO	125	Beverly	01-03	AGDS610	AGDS610	Hengtong
PIAGGIO	125	Beverly	07-	AGDS606	AGDS606	Brembo
PIAGGIO	125	Beverly 125ie	10-	AGDS627	AGDS627	
PIAGGIO	125	Beverly 125ie	10-	AGDS610	AGDS610	
PIAGGIO	125	Beverly RST	06	AGDS606	AGDS606	Grimeca
PIAGGIO	125	Beverly RST	06	AGDS610	AGDS610	Hengtong
PIAGGIO	125	Beverly RST	04-05	AGDS610	AGDS610	
PIAGGIO	125	Beverly Sport	07	AGDS610	AGDS606	Brembo
PIAGGIO	125	Beverly Sport	07	AGDS610	AGDS610	Hengtong
PIAGGIO	125	Beverly Tourer	08-	AGDS610	AGDS606	
PIAGGIO	125	Carnaby	07	AGDS606	AGDS606	Brembo
PIAGGIO	125	Carnaby	07	AGDS606	AGDS606	Hengtong

LEVE / levers

INDICE ANALITICO LEVE / levers index

MARCA Brand	CC	MODELLO Model	ANNI Years	LEVA FRIZIONE Clutch Lever	LEVA FRENO Brake Lever	NOTE Notes
PIAGGIO	125	Carnaby	07-09	AGDS610	AGDS610	
PIAGGIO	125	Fly	05-08	AGS71	AGDS616	Grimeca
PIAGGIO	125	Fly	05-08	AGS71	AGDS611	Hengtong
PIAGGIO	125	Hexagon 125	94-97	AGS72	AGD115	
PIAGGIO	125	Hexagon GTX	00	AGDS612	AGD115	
PIAGGIO	125	Hexagon LX	98-99	AGS71	AGDS616	
PIAGGIO	125	Hexagon LX4	98-99	AGS71	AGDS616	
PIAGGIO	125	Hexagon LXT	98-99	AGS71	AGDS616	
PIAGGIO	125	Liberty	00-02	AGS180	AGD47	Grimeca
PIAGGIO	125	Liberty	98-00	AGS180	AGD47	
PIAGGIO	125	Liberty 4T	06-09	AGS71	AGDS616	Grimeca
PIAGGIO	125	Liberty 4T	06-09	AGS71	AGDS611	Hengtong
PIAGGIO	125	Liberty 4T Sport	06-09	AGS71	AGDS616	Grimeca
PIAGGIO	125	Liberty 4T Sport	06-09	AGS71	AGDS611	Hengtong
PIAGGIO	125	Liberty Delivery 125 4T	08-	AGDS611	AGDS611	
PIAGGIO	125	Liberty RST	04-05	AGS71	AGDS611	
PIAGGIO	125	Liberty RST PTT	05-06	AGDS611	AGDS616	Grimeca
PIAGGIO	125	Liberty RST PTT	05-06	AGS71	AGDS611	Hengtong
PIAGGIO	125	MP3	07-09	AGDS610	AGDS606	
PIAGGIO	125	MP3 125i.e.	08-	AGDS610	AGDS606	
PIAGGIO	125	MP3 Hybrid	10-	AGDS610	AGDS606	
PIAGGIO	125	MP3 MIC	08-	AGDS610	AGDS606	
PIAGGIO	125	Skipper	94-97	AGS41	AGD115	
PIAGGIO	125	Skipper 4T	00-02	AGS41	AGD115	Grimeca
PIAGGIO	125	Skipper 4T	00-02	AGS41	AGD115	Hengtong
PIAGGIO	125	Skipper LX	98-99	AGS41	AGD115	
PIAGGIO	125	Skipper ST 4T	00	AGS41	AGD115	
PIAGGIO	125	Super Hexagon GTX	01-02	AGDS612	AGD115	Grimeca
PIAGGIO	125	Typhoon		AGS72	AGD148	
PIAGGIO	125	Typhoon 4T-2V	10-14	AGS41	AGDS612	
PIAGGIO	125	Typhoon X		AGS72	AGD148	
PIAGGIO	125	Typhoon XR		AGS72	AGD148	
PIAGGIO	125	Vespa	55-65	AGS164	AGD169	
PIAGGIO	125	Vespa	67-82	AGS164	AGD169	
PIAGGIO	125	Vespa ET4	96-99	AGS180	AGD47	
PIAGGIO	125	Vespa ET4	99-06	AGS180	AGD47	Grimeca
PIAGGIO	125	Vespa FL	89-90	AGS18	AGD216	
PIAGGIO	125	Vespa Granturismo	03-07	AGDS611	AGDS611	
PIAGGIO	125	Vespa GTS	07-	AGDS611	AGDS611	
PIAGGIO	125	Vespa GTV	07-	AGDS611	AGDS611	
PIAGGIO	125	Vespa GTV 4T Navy	08-	AGDS611	AGDS611	
PIAGGIO	125	Vespa LX	05-09	AGS71	AGDS616	Grimeca
PIAGGIO	125	Vespa LX	05-09	AGS71	AGDS611	Hengtong
PIAGGIO	125	Vespa LX	05-09	AGS71	AGDS611	
PIAGGIO	125	Vespa LX 125ie	09-	AGS71	AGDS611	
PIAGGIO	125	Vespa LX 125ie Touring	09-	AGS71	AGDS611	
PIAGGIO	125	Vespa LX 4T FL	09-	AGS71	AGDS611	
PIAGGIO	125	Vespa LX Primavera 4T-3V ie	13-15	AGS71	AGDS611	
PIAGGIO	125	Vespa LXV 4T	06-	AGS128	AGDS611	
PIAGGIO	125	Vespa LXV 4T Navy	08-	AGS128	AGDS611	
PIAGGIO	125	Vespa PK XL	86-89	AGS159	-	
PIAGGIO	125	Vespa Primavera		-	AGD227	
PIAGGIO	125	Vespa Primavera 4T-3V	13-15	AGS71	AGDS611	
PIAGGIO	125	Vespa PX	01-07	AGDS623	AGD261	
PIAGGIO	125	Vespa PX	11-	AGDS623	AGD261	
PIAGGIO	125	Vespa PX	98-01	AGDS623	AGD261	
PIAGGIO	125	Vespa PX 30th Anniversary	11	AGDS623	AGD261	
PIAGGIO	125	Vespa PXE Arcobaleno	81-97	AGDS623	AGDS623	
PIAGGIO	125	Vespa S 4T	07-	AGS71	AGDS611	
PIAGGIO	125	Vespa S 4T	07-	AGDS611	AGDS611	
PIAGGIO	125	Vespa Sprint 4T-3V	14-15	AGS71	AGDS611	

ACCOSSATO

LEVE / levers

INDICE ANALITICO LEVE / levers index

MARCA Brand	CC	MODELLO Model	ANNI Years	LEVA FRIZIONE Clutch Lever	LEVA FRENO Brake Lever	NOTE Notes
PIAGGIO	125	Vespa Vintage	55-82	AGS164	AGD169	
PIAGGIO	125	X-Evo	07	AGDS610	AGDS610	
PIAGGIO	125	X10 4T-4V IE	12-	AGDS630	AGDS630	
PIAGGIO	125	X7	08-09	AGDS610	AGDS610	
PIAGGIO	125	X8	04-07	AGDS610	AGDS610	
PIAGGIO	125	X8 Premium	06-07	AGDS610	AGDS610	
PIAGGIO	125	X8 Street	06-07	AGS129	AGDS610	
PIAGGIO	125	X9 125		AGDS606	AGDS606	
PIAGGIO	125	X9 Evolution	01-04	AGDS606	AGDS606	
PIAGGIO	125	X9 Evolution	05-07	AGDS610	AGDS610	
PIAGGIO	150	Hexagon 150	94-97	AGS72	AGD115	
PIAGGIO	150	Liberty	00-02	AGS180	AGD47	Hengtong
PIAGGIO	150	Liberty 4T	08-	AGS71	AGDS611	
PIAGGIO	150	Liberty 4T	08-	AGDS611	AGDS611	
PIAGGIO	150	Liberty 4T Sport	08-	AGS71	AGDS611	
PIAGGIO	150	Liberty 4T Sport	08-	AGDS611	AGDS611	
PIAGGIO	150	Skipper	94-97	AGS41	AGD115	
PIAGGIO	150	Skipper 150		AGS41	AGD67	
PIAGGIO	150	Skipper 4T	00-02	AGS41	AGD115	Grimeca
PIAGGIO	150	Skipper 4T	00-02	AGS41	AGD115	Hengtong
PIAGGIO	150	Skipper LX	98-99	AGS41	AGD115	
PIAGGIO	150	Skipper LX 2T	98-99	AGS41	AGD115	
PIAGGIO	150	Skipper ST 4T	00	AGS41	AGD115	
PIAGGIO	150	Vespa		AGS181	AGD228	Modelli vecchi / old models
PIAGGIO	150	Vespa ET4	99-06	AGS180	AGD47	Hengtong
PIAGGIO	150	Vespa GS	65-70	AGS164	AGD169	
PIAGGIO	150	Vespa LX	06-07	AGS71	AGDS616	Grimeca
PIAGGIO	150	Vespa LX	06-	AGS71	AGDS611	Hengtong
PIAGGIO	150	Vespa LX 150ie	09-	AGS71	AGDS611	
PIAGGIO	150	Vespa LX 150ie Touring	09-	AGS71	AGDS611	
PIAGGIO	150	Vespa LX 4T FL	09-	AGS71	AGDS611	
PIAGGIO	150	Vespa Primavera 4T-3V	13-15	AGS71	AGDS611	
PIAGGIO	150	Vespa PX	11-15	AGDS623	AGD261	
PIAGGIO	150	Vespa PX	98-01	AGDS623	AGD261	
PIAGGIO	150	Vespa PXE Arcobaleno	81-97	AGDS623	AGDS623	
PIAGGIO	150	Vespa S 150 4T	08-	AGDS611	AGDS611	
PIAGGIO	150	Vespa S 4T	08-	AGS71	AGDS611	
PIAGGIO	150	Vespa Sprint	66-71	AGS164	AGD169	
PIAGGIO	150	X8 Street	06-07	AGS129	AGDS610	
PIAGGIO	160	Vespa GT	69-73	AGS164	AGD169	
PIAGGIO	180	Hexagon GTX	00	AGDS612	AGD115	
PIAGGIO	180	Hexagon LX	98-99	AGS71	AGDS611	
PIAGGIO	180	Hexagon LXT	98-99	AGS71	AGDS611	
PIAGGIO	180	Super Hexagon GTX	01-02	AGDS612	AGDS612	Hengtong
PIAGGIO	180	X9 180		AGDS606	AGDS606	
PIAGGIO	180	X9 Amalfi	00-03	AGDS606	AGDS606	
PIAGGIO	200	Beverly	01-03	AGDS606	AGDS606	Grimeca
PIAGGIO	200	Beverly	01-03	AGDS610	AGDS610	Hengtong
PIAGGIO	200	Carnaby	07	AGDS606	AGDS606	Brembo
PIAGGIO	200	Carnaby	07	AGDS606	AGDS606	Hengtong
PIAGGIO	200	Carnaby	07-08	AGDS610	AGDS610	
PIAGGIO	200	Liberty	06	AGS71	AGDS611	
PIAGGIO	200	Liberty 4T	06	AGS71	AGDS616	Hengtong
PIAGGIO	200	Liberty 4T Sport	06	AGS71	AGDS616	Grimeca
PIAGGIO	200	Liberty 4T Sport	06-07	AGS71	AGDS611	Hengtong
PIAGGIO	200	Liberty RST	04	AGS71	AGDS611	
PIAGGIO	200	Liberty Sport	04-06	AGS71	AGDS611	
PIAGGIO	200	Vespa 200		AGDS638	AGDS638	
PIAGGIO	200	Vespa Granturismo	03-07	AGDS611	AGDS611	
PIAGGIO	200	Vespa PX	98-01	AGDS623	AGD261	
PIAGGIO	200	Vespa PXE Arcobaleno	81-97	AGDS623	AGDS623	

LEVE / levers

INDICE ANALITICO LEVE / levers index

MARCA Brand	CC	MODELLO Model	ANNI Years	LEVA FRIZIONE Clutch Lever	LEVA FRENO Brake Lever	NOTE Notes
PIAGGIO	200	X8	05-07	AGDS610	AGDS610	
PIAGGIO	200	X9 Evolution		AGDS606	AGDS606	
PIAGGIO	250	Beverly	06-07	AGDS606	AGDS606	Brembo
PIAGGIO	250	Beverly	06-07	AGDS610	AGDS610	Hengtong
PIAGGIO	250	Beverly Cruiser	07-	AGDS633	AGDS633	
PIAGGIO	250	Beverly RST	04-05	AGDS606	AGDS606	Brembo
PIAGGIO	250	Beverly RST	04-05	AGDS610	AGDS610	Hengtong
PIAGGIO	250	Beverly Sport	06	AGDS606	AGDS606	Brembo
PIAGGIO	250	Beverly Sport	06-07	AGDS610	AGDS610	Hengtong
PIAGGIO	250	Beverly Tourer	08-	AGDS610	AGDS606	
PIAGGIO	250	Carnaby	08	AGDS610	AGDS610	
PIAGGIO	250	MP3	06-07	AGDS610	AGDS606	
PIAGGIO	250	MP3 LT	09-	AGDS610	AGDS606	
PIAGGIO	250	MP3 MIC	08-	AGDS610	AGDS606	
PIAGGIO	250	Vespa GT 60	06-07	AGDS611	AGDS611	
PIAGGIO	250	Vespa GTS	05-	AGDS611	AGDS611	
PIAGGIO	250	Vespa GTS ABS	05-	AGDS616	AGDS616	
PIAGGIO	250	Vespa GTV	06-	AGDS611	AGDS611	
PIAGGIO	250	Vespa GTV 4T Navy	08-	AGDS611	AGDS611	
PIAGGIO	250	X-Evo	07	AGDS610	AGDS610	
PIAGGIO	250	X8	05-07	AGDS610	AGDS610	
PIAGGIO	250	X9 250		AGDS606	AGDS606	
PIAGGIO	250	X9 Evolution	04-07	AGDS610	AGDS610	
PIAGGIO	300	Beverly 300ie	10-	AGDS627	AGDS627	
PIAGGIO	300	Beverly 300ie	10-	AGDS610	AGDS610	
PIAGGIO	300	Beverly Tourer 300i.e.	09-	AGDS610	AGDS606	
PIAGGIO	300	Carnaby Cruiser	09-	AGDS627	AGDS627	
PIAGGIO	300	Carnaby Cruiser	09-	AGDS610	AGDS610	
PIAGGIO	300	Vespa GTS	10-	AGDS611	AGDS611	SuperSport
PIAGGIO	300	Vespa GTS Super	08-	AGDS611	AGDS611	
PIAGGIO	300	Vespa GTV	10-	AGDS611	AGDS611	Via Montenapoleone
PIAGGIO	300	X7 Evo IE	09-	AGDS610	AGDS610	
PIAGGIO	350	Beverly 4T-4V ie Sport Touring	11-15	AGDS610	AGDS606	Brembo
PIAGGIO	350	X10 4T-4V IE	12-	AGDS630	AGDS630	
PIAGGIO	400	Beverly	06-07	AGDS606	AGDS606	Brembo
PIAGGIO	400	Beverly	06-07	AGDS610	AGDS606	Hengtong
PIAGGIO	400	Beverly Tourer	08-	AGDS610	AGDS606	
PIAGGIO	400	MP3	07-09	AGDS610	AGDS606	
PIAGGIO	400	MP3 LT	09-	AGDS610	AGDS606	
PIAGGIO	400	X-Evo	07-	AGDS610	AGDS610	
PIAGGIO	400	X8	06-07	AGDS610	AGDS610	
PIAGGIO	500	Beverly	02-04	AGDS606	AGDS606	
PIAGGIO	500	Beverly	05-07	AGDS606	AGDS606	Brembo
PIAGGIO	500	Beverly	05-07	AGDS610	AGDS606	Hengtong
PIAGGIO	500	Beverly Cruiser	07-	AGDS633	AGDS633	
PIAGGIO	500	MP3	10-	AGDS610	AGDS606	
PIAGGIO	500	MP3 Sport	10-	AGDS610	AGDS606	
PIAGGIO	500	X10 4T-4V IE	12-	AGDS630	AGDS630	
PIAGGIO	500	X9		AGDS606	AGDS606	
PIAGGIO	500	X9 Evolution	03-07	AGDS606	AGDS606	
PUCH	50	Puch		AGS142	AGD120	
PUCH	50	Puch		AGS107	AGD110	
RIEJU	50	Drac		AGS166	AGD161	Brembo
RIEJU	50	First		AGS39	AGDS615	
RIEJU	50	MRT	09-10	AGS55	AGD288	AJP
RIEJU	50	MRT	11-	AGS55	AGD304	J.Juan
RIEJU	50	MRT Pro	09-10	AGS55	AGD288	AJP
RIEJU	50	MRT Pro	11-	AGS55	AGD304	J.Juan
RIEJU	50	MRT Pro Competizione	10	AGS55	AGD288	AJP
RIEJU	50	MRT Pro Competizione	11-	AGS55	AGD304	J.Juan
RIEJU	50	MRT SM	09-10	AGS55	AGD288	AJP

ACCOSSATO

LEVE / levers

INDICE ANALITICO LEVE / levers index

MARCA Brand	CC	MODELLO Model	ANNI Years	LEVA FRIZIONE Clutch Lever	LEVA FRENO Brake Lever	NOTE Notes
RIEJU	50	MRT SM	11-	AGS55	AGD304	J.Juan
RIEJU	50	MRT SM Pro	09-10	AGS55	AGD288	AJP
RIEJU	50	MRT SM Pro	11-	AGS55	AGD304	J.Juan
RIEJU	50	MRX	05-07	AGS56	AGD75	
RIEJU	50	MRX	00-04	AGS31	AGD75	
RIEJU	50	MRX Pro	02-04	AGS31	AGD75	
RIEJU	50	MRX Pro	05-07	AGS56	AGD75	
RIEJU	50	RR AM6		AGS166	AGD161	Brembo
RIEJU	50	RR AM6		AGS31	AGDS602	AJP
RIEJU	50	RR Sport	05-07	AGS56	AGD75	
RIEJU	50	RRX	05-07	AGS56	AGD75	
RIEJU	50	RRX Spike	05-07	AGS56	AGD75	
RIEJU	50	RS1 Evolution		AGS56	AGD75	
RIEJU	50	RS2 Matrix		AGS56	AGD129	
RIEJU	50	RS2 Nkd		AGS56	AGD129	
RIEJU	50	RS2 Pro		AGS56	-	
RIEJU	50	RV		AGS142	AGD120	
RIEJU	50	RV		AGS107	AGD110	
RIEJU	50	SMX	05-07	AGS56	AGD75	
RIEJU	50	SMX	00-04	AGS31	AGD75	
RIEJU	50	SMX Pro	05-07	AGS56	AGD75	
RIEJU	50	Spike	05-07	AGS56	AGD75	
RIEJU	50	Spike	98-04	AGS66	AGDS602	
RIEJU	50	Tango		AGS55	AGD288	AJP
RIEJU	50	Tango Motard		AGS55	AGD288	AJP
RIEJU	50	TangoO!		AGS55	AGD288	AJP
RIEJU	50	Toreo	0-09	AGS246	AGD259	
RIEJU	80	RST		AGS147	-	
RIEJU	125	Marathon AC	11-	AGS55	AGD304	J.Juan
RIEJU	125	Marathon SM Pro	09-10	AGS55	AGD288	AJP
RIEJU	125	Marathon SM Pro	11-	AGS55	AGD304	J.Juan
RIEJU	125	MRX	05-07	AGS56	AGD75	
RIEJU	125	MRX	00-04	AGS31	AGD75	
RIEJU	125	RS2		AGS56	AGD129	
RIEJU	125	RS2 Nkd 125		AGS56	AGD129	
RIEJU	125	RS2 Pro		AGS56	AGD129	
RIEJU	125	SMX	05-07	AGS56	AGD75	
RIEJU	125	SMX	00-04	AGS31	AGD75	
RIEJU	125	Tango	07-	AGS55	AGD288	AJP
RIEJU	125	Tango Pro	07-	AGS55	AGD288	AJP
RIEJU	250	Marathon Pro Comp.	10-11	AGS55	AGD288	AJP
RIEJU	250	Tango	09-	AGS91	AGD288	AJP
RIEJU	450	Marathon Pro Comp.	10-11	AGS55	AGD288	AJP
RIEJU	-	Freno Brembo		AGDS639	AGDS639	
SHERCO	50	SE	04-06	AGS02	AGD288	**Dx corta forg.** / R short forged
SHERCO	50	SE	04-06	AGS02	AGDS600	**Dx. lunga** / R long
SHERCO	50	SE	04-06	AGS81	AGDS602	**Dx. lunga** / R long
SHERCO	50	SE	07-10	AGS55	AGD288	**Dx corta forg.** / R short forged
SHERCO	50	SE	07-10	AGS55	AGDS600	**Dx. lunga** / R long
SHERCO	50	SE	07-10	AGS56	AGDS602	**Dx. lunga** / R long
SHERCO	50	SE	11-	AGS56	AGD304	J.Juan
SHERCO	50	SM	04-06	AGS02	AGD288	**Dx corta forg.** / R short forged
SHERCO	50	SM	04-06	AGS02	AGDS600	**Dx. lunga** / R long
SHERCO	50	SM	04-06	AGS81	AGDS602	**Dx. lunga** / R long
SHERCO	50	SM	07-10	AGS55	AGD288	**Dx corta forg.** / R short forged
SHERCO	50	SM	07-10	AGS55	AGDS600	**Dx. lunga** / R long
SHERCO	50	SM	07-10	AGS56	AGDS602	**Dx. lunga** / R long
SHERCO	50	SM	11-	AGS56	AGD304	J.Juan
SHERCO	80	Trial 2T	02-04	AGS169	AGD38	**Sx+Dx corta** / L+R short
SHERCO	80	Trial 2T	05-	AGS192	AGD151	
SHERCO	125	SE	04	AGS02	AGD288	**Dx corta forg.** / R short forged

LEVE / levers

INDICE ANALITICO LEVE / levers index

MARCA Brand	**CC**	**MODELLO** Model	**ANNI** Years	**LEVA FRIZIONE** Clutch Lever	**LEVA FRENO** Brake Lever	**NOTE** Notes
SHERCO	**125**	**SE**	**04**	**AGS02**	**AGDS600**	**Dx. lunga** / R long
SHERCO	**125**	**SE**	**04**	**AGS81**	**AGDS602**	**Dx. lunga** / R long
SHERCO	**125**	**SM**	**04**	**AGS02**	**AGD288**	**Dx corta forg.** / R short forged
SHERCO	**125**	**SM**	**04**	**AGS02**	**AGDS600**	**Dx. lunga** / R long
SHERCO	**125**	**SM**	**04**	**AGS81**	**AGDS602**	**Dx. lunga** / R long
SHERCO	**125**	**Trial 2T**	**02-04**	**AGS168**	**AGD37**	**Sx+Dx corta** / L+R short
SHERCO	**125**	**Trial 2T**	**02-04**	**AGS169**	**AGD38**	**Sx+Dx corta** / L+R short
SHERCO	**125**	**Trial 2T**	**05-**	**AGS192**	**AGD151**	
SHERCO	**200**	**Trial 2T**	**02-04**	**AGS168**	**AGD37**	**Sx+Dx corta** / L+R short
SHERCO	**200**	**Trial 2T**	**02-04**	**AGS169**	**AGD38**	**Sx+Dx corta** / L+R short
SHERCO	**200**	**Trial 2T**	**05-**	**AGS192**	**AGD151**	
SHERCO	**250**	**SE**	**14-15**	**AGS14**	**AGD316**	**Dx Forg Brembo** /Brembo R forged
SHERCO	**250**	**SE**	**14-15**	**AGS211**	**AGD316**	**Sx+Dx forg. Brembo** /L+R forged Brembo
SHERCO	**250**	**SE i**	**11-13**	**AGS211**	**AGD219**	**Forgiate** / Forged
SHERCO	**250**	**SE i**	**11-13**	**AGS14**	**AGD10**	
SHERCO	**250**	**SE-R**	**14-15**	**AGS14**	**AGD316**	**Dx Forg Brembo** /Brembo R forged
SHERCO	**250**	**SE-R**	**14-15**	**AGS211**	**AGD316**	**Sx+Dx forg. Brembo** /L+R forged Brembo
SHERCO	**250**	**SEF**	**14-15**	**AGS14**	**AGD316**	**Dx Forg Brembo** /Brembo R forged
SHERCO	**250**	**SEF**	**14-15**	**AGS211**	**AGD316**	**Sx+Dx forg. Brembo** /L+R forged Brembo
SHERCO	**250**	**SEF-R**	**14-15**	**AGS14**	**AGD316**	**Dx Forg Brembo** /Brembo R forged
SHERCO	**250**	**SEF-R**	**14-15**	**AGS211**	**AGD316**	**Sx+Dx forg. Brembo** /L+R forged Brembo
SHERCO	**250**	**Trial 2T**	**02-04**	**AGS168**	**AGD37**	**Sx+Dx corta** / L+R short
SHERCO	**250**	**Trial 2T**	**02-04**	**AGS169**	**AGD38**	**Sx+Dx corta** / L+R short
SHERCO	**250**	**Trial 2T**	**05-**	**AGS192**	**AGD151**	
SHERCO	**290**	**Trial 2T**	**02-04**	**AGS168**	**AGD37**	**Sx+Dx corta** / L+R short
SHERCO	**290**	**Trial 2T**	**02-04**	**AGS169**	**AGD38**	**Sx+Dx corta** / L+R short
SHERCO	**290**	**Trial 2T**	**05-**	**AGS192**	**AGD151**	
SHERCO	**290**	**X-Ride**	**11-**	**-**	**AGD304**	**J.Juan**
SHERCO	**300**	**SE**	**14-15**	**AGS14**	**AGD316**	**Dx Forg Brembo** /Brembo R forged
SHERCO	**300**	**SE**	**14-15**	**AGS211**	**AGD316**	**Sx+Dx forg. Brembo** /L+R forged Brembo
SHERCO	**300**	**SE i R**	**11-13**	**AGS211**	**AGD219**	**Forgiate** / Forged
SHERCO	**300**	**SE i R**	**11-13**	**AGS14**	**AGD10**	
SHERCO	**300**	**SE-R**	**14-15**	**AGS14**	**AGD316**	**Dx Forg Brembo** /Brembo R forged
SHERCO	**300**	**SE-R**	**14-15**	**AGS211**	**AGD316**	**Sx+Dx forg. Brembo** /L+R forged Brembo
SHERCO	**300**	**SEF**	**14-15**	**AGS14**	**AGD316**	**Dx Forg Brembo** /Brembo R forged
SHERCO	**300**	**SEF**	**14-15**	**AGS211**	**AGD316**	**Sx+Dx forg. Brembo** /L+R forged Brembo
SHERCO	**300**	**SEF-R**	**14-15**	**AGS14**	**AGD316**	**Dx Forg Brembo** /Brembo R forged
SHERCO	**300**	**SEF-R**	**14-15**	**AGS211**	**AGD316**	**Sx+Dx forg. Brembo** /L+R forged Brembo
SHERCO	**320**	**Trial 4T**	**05-**	**AGS192**	**AGD151**	
SHERCO	**450**	**Enduro**	**04-**	**AGS170**	**AGD294**	**Sx lunga Dx corta** / L long R short
SHERCO	**450**	**Enduro**	**04-**	**AGS168**	**AGD294**	**Sx+Dx corta** / L+R short
SHERCO	**450**	**Supermotard**	**05-**	**AGS170**	**AGD294**	**Sx lunga Dx corta** / L long R short
SHERCO	**450**	**Supermotard**	**05-**	**AGS168**	**AGD294**	**Sx+Dx corta** / L+R short
SHERCO	**510**	**Enduro**	**07-**	**AGS170**	**AGD294**	**Sx lunga Dx corta** / L long R short
SHERCO	**510**	**Enduro**	**07-**	**AGS168**	**AGD294**	**Sx+Dx corta** / L+R short
SHERCO	**510**	**Supermotard**	**07-**	**AGS170**	**AGD294**	**Sx lunga Dx corta** / L long R short
SHERCO	**510**	**Supermotard**	**07-**	**AGS168**	**AGD294**	**Sx+Dx corta** / L+R short
SUZUKI	**50**	**Address R**	**95-02**	**AGS175**	**AGD58**	
SUZUKI	**50**	**AH 50N Address**	**94-96**	**AGS175**	**AGD177**	
SUZUKI	**50**	**AH 50R Address DX**	**94-96**	**AGS175**	**AGD58**	
SUZUKI	**50**	**AJ ZZ Sepia S**	**95-97**	**AGS174**	**AGD57**	
SUZUKI	**50**	**AY Katana**	**97-04**	**AGS175**	**AGD92**	
SUZUKI	**50**	**AY Katana W**	**99-06**	**AGS309**	**AGD92**	
SUZUKI	**50**	**DR Big**		**AGS184**	**AGD161**	**Brembo**
SUZUKI	**50**	**RMX**	**98-01**	**AGS31**	**AGDS625**	
SUZUKI	**50**	**SMX Y**	**00-01**	**AGS31**	**AGDS625**	
SUZUKI	**50**	**Suzzy**	**96-02**	**AGS175**	**AGD177**	
SUZUKI	**50**	**UF Estilete**	**98-00**	**AGS175**	**AGD92**	
SUZUKI	**50**	**UX Zillion**	**99-00**	**AGS175**	**AGD92**	
SUZUKI	**50**	**UX Zillion LC**	**98**	**AGS309**	**AGD92**	
SUZUKI	**80**	**RM**	**86-95**	**AGS249**	**AGD23**	

ACCOSSATO

LEVE / levers

INDICE ANALITICO LEVE / levers index

MARCA Brand	CC	MODELLO Model	ANNI Years	LEVA FRIZIONE Clutch Lever	LEVA FRENO Brake Lever	NOTE Notes
SUZUKI	85	RM	02-06	AGS249	AGD23	**Dx forgiata** / R forged
SUZUKI	85	RM	07-	AGS75	AGD112	**Sx forgiata** / L forged
SUZUKI	100	Address	93-95	AGS175	AGD58	
SUZUKI	110	UG Hokuto	00-01	AGS174	AGD57	
SUZUKI	125	AN Burgman	07-13	AGS150	AGD49	
SUZUKI	125	AN Burgman	95-00	AGS174	AGD57	
SUZUKI	125	DR SE	94-95	AGS249	-	
SUZUKI	125	DR SM	09-	AGS253	-	
SUZUKI	125	DR-Z	08-	AGS249	AGD23	
SUZUKI	125	GN	82-96	-	AGD50	
SUZUKI	125	GZ Marauder	03-06	AGS252	AGD139	
SUZUKI	125	GZ Marauder	98-02	AGS45	AGD101	
SUZUKI	125	RGV 2T	89-96	AGS135	AGD101	**Tensore freno** / brake tensor
SUZUKI	125	RGV 2T	89-96	AGS135	AGD86	
SUZUKI	125	RM	01-08	AGS75	AGD112	
SUZUKI	125	RM	92-95	AGS75	AGD23	
SUZUKI	125	RM	96-06	AGS75	AGD93	**Dx forgiata** / R forged
SUZUKI	125	RM	96-06	AGS76	AGD94	**Dx forgiata** / R forged
SUZUKI	125	RM	96-06	AGS76	AGD94	**Dx forgiata** / R forged
SUZUKI	125	RV Van Van	03-	AGS45	AGD49	
SUZUKI	125	TS 125R	89-94	AGS249	-	
SUZUKI	125	TU 125X	97-02	AGS45	AGD101	
SUZUKI	125	UC Epicuro	99-02	AGS174	AGD57	
SUZUKI	125	UH Burgman	02-06	AGS150	AGD49	
SUZUKI	125	UX Sixteen	08-13	AGS150	AGD49	
SUZUKI	125	VL Intruder	00-07	AGS45	AGD139	
SUZUKI	150	AN Burgman	95-02	AGS174	AGD57	
SUZUKI	150	UC X Epicuro	97-02	AGS174	AGD57	
SUZUKI	150	UH Burgman	02-06	AGS150	AGD49	
SUZUKI	150	UX Sixteen	08-13	AGS150	AGD49	
SUZUKI	200	UH Burgman	07-13	AGS150	AGD49	
SUZUKI	250	AN Burgman	03-06	AGS150	AGD49	
SUZUKI	250	AN Burgman	98-02	AGS150	AGD49	
SUZUKI	250	GN	85-95	AGS134	AGD61	
SUZUKI	250	GN	96-98	AGS134	AGD265	
SUZUKI	250	GN E		AGS134	AGD61	
SUZUKI	250	GZ Marauder	02	AGS45	AGD139	
SUZUKI	250	GZ Marauder	03-07	AGS252	AGD139	
SUZUKI	250	GZ Marauder	99-01	AGS45	AGD101	
SUZUKI	250	LT-Z Quadsport	09-	AGS257	AGD268	
SUZUKI	250	RGV	89-96	AGS250	AGD86	
SUZUKI	250	RM	01-08	AGS75	AGD112	
SUZUKI	250	RM	93-95	AGS75	AGD23	
SUZUKI	250	RM	96-00	AGS75	AGD93	**Dx corta forg.** / R short forged
SUZUKI	250	RM	96-00	AGS76	AGD94	**Dx corta forg.** / R short forged
SUZUKI	250	RM-Z	04-07	AGS97	AGD112	
SUZUKI	250	RM-Z	07-09	AGS89	AGD112	
SUZUKI	250	RM-Z	10-	AGS89	AGD112	
SUZUKI	250	RMX 250 R	92-95	AGS75	AGD23	
SUZUKI	250	TU X	97-02	AGS45	AGD101	
SUZUKI	250	TU XV	97-02	AGS45	AGD101	
SUZUKI	250	VL Intruder	00-07	AGS45	AGD101	
SUZUKI	350	DR S	90-94	AGS249	-	
SUZUKI	350	DR SE	94-98	AGS249	-	
SUZUKI	400	AN Burgman	07-13	AGS150	AGD49	
SUZUKI	400	AN Burgman	03-06	AGS150	AGD49	
SUZUKI	400	AN Burgman	99-02	AGS150	AGD49	
SUZUKI	400	DR-Z	00-	AGS249	AGD93	**Dx forgiata** / R forged
SUZUKI	400	DR-Z	00-	AGS277	-	
SUZUKI	400	DR-Z	00-07	AGS76	AGD94	**Dx forgiata** / R forged
SUZUKI	400	DR-Z E	00-03	AGS249	AGD93	**Dx forgiata** / R forged

LEVE / levers

INDICE ANALITICO LEVE / levers index

MARCA Brand	**CC**	**MODELLO** Model	**ANNI** Years	**LEVA FRIZIONE** Clutch Lever	**LEVA FRENO** Brake Lever	**NOTE** Notes
SUZUKI	**400**	**DR-Z E**	**00-03**	**AGS277**	**-**	
SUZUKI	**400**	**DR-Z S**	**00-**	**AGS253**	**AGD267**	
SUZUKI	**400**	**DR-Z S**	**00-**	**AGS277**	**-**	
SUZUKI	**400**	**DR-Z SM**	**05-**	**AGS253**	**AGD267**	
SUZUKI	**400**	**DR-Z SM**	**05-**	**AGS277**	**-**	
SUZUKI	**400**	**GS**		**AGS185**	**AGD231**	
SUZUKI	**400**	**GSF Bandit**	**-91**	**AGS57**	**AGD101**	
SUZUKI	**400**	**GSF Bandit**	**91-93**	**AGS250**	**AGD86**	
SUZUKI	**400**	**LT-Z Quadsport**	**04-07**	**AGS210**	**AGD268**	
SUZUKI	**400**	**LT-Z Quadsport**	**09-**	**AGS210**	**AGD263**	
SUZUKI	**450**	**LT-A Kingquad**	**07-09**	**AGS257**	**AGD268**	
SUZUKI	**450**	**LT-R Quadracer**	**06-10**	**AGS210**	**AGD263**	
SUZUKI	**450**	**RM-Z**	**05-**	**AGS89**	**AGD112**	**Sx forgiata** / L forged
SUZUKI	**450**	**RMX**	**10-**	**AGS249**	**AGD112**	
SUZUKI	**500**	**GS**	**01-03**	**AGS135**	**AGD03**	
SUZUKI	**500**	**GS**	**04-07**	**AGS135**	**AGD139**	
SUZUKI	**500**	**GS**	**99-00**	**AGS135**	**AGD86**	**Senza tensore** / No tensor
SUZUKI	**500**	**LT-A F Vinson**	**04**	**-**	**AGD266**	
SUZUKI	**500**	**LT-A F Vinson**	**05-07**	**-**	**AGD268**	
SUZUKI	**600**	**DR R**	**86-89**	**AGS134**	**AGD154**	
SUZUKI	**600**	**DR S**	**85-88**	**AGS134**	**AGD154**	
SUZUKI	**600**	**GSF Bandit**	**00-04**	**AGS135**	**AGD03**	
SUZUKI	**600**	**GSF Bandit**	**95-99**	**AGS135**	**AGD86**	**Senza tensore** / No tensor
SUZUKI	**600**	**GSF Bandit**	**95-99**	**AGS135**	**AGD101**	
SUZUKI	**600**	**GSR**	**06-**	**AGS45**	**AGD262**	
SUZUKI	**600**	**GSR A**	**10-**	**AGS45**	**AGD262**	
SUZUKI	**600**	**GSX F**	**88-95**	**AGS57**	**AGD86**	
SUZUKI	**600**	**GSX F**	**98-06**	**AGS250**	**AGD86**	
SUZUKI	**600**	**GSX-R**	**01-03**	**AGS45**	**AGD03**	
SUZUKI	**600**	**GSX-R**	**04-05**	**AGS45**	**AGD08**	
SUZUKI	**600**	**GSX-R**	**06-**	**AGS255**	**AGD08**	
SUZUKI	**600**	**GSX-R**	**97-00**	**AGS45**	**AGD86**	
SUZUKI	**600**	**RF**	**93-97**	**AGS57**	**AGD101**	
SUZUKI	**600**	**RF R**	**93-96**	**AGS57**	**AGD86**	
SUZUKI	**600**	**VS GL Intruder**	**95-99**	**AGS50**	**AGD232**	
SUZUKI	**650**	**AN Burgman**	**03-05**	**AGS248**	**AGD03**	
SUZUKI	**650**	**AN Burgman**	**06-**	**AGS248**	**AGD11**	
SUZUKI	**650**	**DL V-Strom**	**11**	**AGS45**	**AGD11**	
SUZUKI	**650**	**DL V-Strom**	**12-13**	**AGS45**	**AGD262**	
SUZUKI	**650**	**DL V-Strom**	**04-10**	**AGS250**	**AGD262**	
SUZUKI	**650**	**DR R**	**90-93**	**AGS187**	**AGD50**	
SUZUKI	**650**	**DR R**	**91-94**	**AGS187**	**AGD50**	
SUZUKI	**650**	**DR RE**	**94-95**	**AGS251**	**AGD50**	
SUZUKI	**650**	**DR RS**	**85-88**	**AGS187**	**AGD50**	
SUZUKI	**650**	**DR RS**	**90-91**	**AGS187**	**AGD50**	
SUZUKI	**650**	**DR RSE**	**91-93**	**AGS187**	**AGD50**	
SUZUKI	**650**	**DR S**	**86-89**	**AGS187**	**AGD154**	
SUZUKI	**650**	**DR SE**	**96-97**	**AGS251**	**AGD50**	
SUZUKI	**650**	**GSF A Bandit**	**10-**	**AGS113**	**AGD262**	
SUZUKI	**650**	**GSF Bandit**	**11-13**	**AGS113**	**AGD11**	
SUZUKI	**650**	**GSF Bandit**	**05-06**	**AGS254**	**AGD03**	
SUZUKI	**650**	**GSF Bandit**	**07-10**	**AGS57**	**AGD262**	
SUZUKI	**650**	**GSF SA Bandit**	**10-**	**AGS113**	**AGD262**	
SUZUKI	**650**	**GSX F**	**08-10**	**AGS57**	**AGD262**	
SUZUKI	**650**	**GSX F**	**11-**	**AGS113**	**AGD11**	
SUZUKI	**650**	**GSX-F Bandit**	**08-**	**AGS113**	**AGD262**	**Idraulico** / Hydraulic
SUZUKI	**650**	**GSX-F F/FU**	**08-**	**AGS113**	**AGD262**	**Idraulico** / Hydraulic
SUZUKI	**650**	**GSX-F FA/FUA**	**08-**	**AGS113**	**AGD11**	**Idraulico** / Hydraulic
SUZUKI	**650**	**LS Savage**	**86-02**	**AGS137**	**AGD232**	
SUZUKI	**650**	**SFV Gladius**	**09-**	**AGS45**	**AGD262**	
SUZUKI	**650**	**SV**	**03-10**	**AGS250**	**AGD03**	

ACCOSSATO

LEVE / levers

INDICE ANALITICO LEVE / levers index

MARCA Brand	CC	MODELLO Model	ANNI Years	LEVA FRIZIONE Clutch Lever	LEVA FRENO Brake Lever	NOTE Notes
SUZUKI	650	SV	99-02	AGS250	AGD03	
SUZUKI	650	XF Freewind	97-02	AGS251	AGD266	
SUZUKI	700	LT-A Kingquad	06-07	AGS257	AGD268	
SUZUKI	750	DR	88-89	AGS187	AGD50	
SUZUKI	750	DR 750	88-89	AGS187	AGD50	
SUZUKI	750	GSR	10-	AGS45	AGD262	
SUZUKI	750	GSX	98-02	AGS135	AGD86	**Senza tensore** / No tensor
SUZUKI	750	GSX	98-02	AGS135	AGD101	
SUZUKI	750	GSX E	85-86	AGS134	-	
SUZUKI	750	GSX F	89-97	AGS57	AGD86	
SUZUKI	750	GSX F	98-06	AGS250	AGD101	
SUZUKI	750	GSX-R	01-05	AGS45	AGD08	
SUZUKI	750	GSX-R	06-	AGS255	AGD08	
SUZUKI	750	GSX-R	85-87	AGS19	-	
SUZUKI	750	GSX-R	88-95	AGS250	AGD86	
SUZUKI	750	GSX-R	96-97	AGS45	AGD86	
SUZUKI	750	GSX-R	98-00	AGS45	AGD03	
SUZUKI	750	VS Intruder	85-92	AGS50	AGD232	
SUZUKI	800	DR Big S	91-94	AGS187	AGD50	
SUZUKI	800	M800 VZ Intruder	10-	AGS256	AGD264	
SUZUKI	800	VL Intruder C800	06-10	AGS137	AGD11	
SUZUKI	800	VL Intruder C800	06-	AGS256	AGD264	
SUZUKI	800	VL Intruder Volusia	01-05	AGS137	AGD11	
SUZUKI	800	VS GL Intruder	92-96	AGS50	AGD232	
SUZUKI	800	VX	90-94	AGS57	AGD86	**Tensore freno** / brake tensor
SUZUKI	800	VZ	97-02	AGS137	AGD86	**Senza tensore** / No tensor
SUZUKI	800	VZ Intruder M800	05-09	AGS256	AGD264	
SUZUKI	800	VZ Marauder 800	97-02	AGS137	AGD101	
SUZUKI	800	VZ Marauder M800	05-06	AGS137	AGD11	
SUZUKI	900	RF	94-96	AGS50	AGD86	**Senza tensore** / No tensor
SUZUKI	900	RF	94-96	AGS50	AGD101	
SUZUKI	1000	DL V-Strom	02-07	AGS113	AGD11	
SUZUKI	1000	GSX-R	10	AGS113	AGD08	**25th Anniversary**
SUZUKI	1000	GSX-R	01-04	AGS45	AGD03	
SUZUKI	1000	GSX-R	05-06	AGS255	AGD08	
SUZUKI	1000	GSX-R	07-08	AGS113	AGD08	
SUZUKI	1000	GSX-R	09-	AGS255	AGD08	
SUZUKI	1000	SV	03-07	AGS113	AGD03	
SUZUKI	1000	TL 1000R	98-00	AGS113	AGD03	
SUZUKI	1000	TL 1000S	97-01	AGS45	AGD101	
SUZUKI	1100	GSX-F 1100	86-88	AGS19	-	
SUZUKI	1100	GSX-F 1100	88-93	AGS52	AGD20	
SUZUKI	1100	GSX-R	86-88	AGS50	-	
SUZUKI	1100	GSX-R	89-96	AGS50	AGD86	
SUZUKI	1100	GSX-R	96-06	AGS50	AGD101	
SUZUKI	1200	GSF Bandit	06	AGS113	AGD262	
SUZUKI	1200	GSF Bandit	01-05	AGS113	AGD03	
SUZUKI	1200	GSF Bandit	96-00	AGS50	AGD86	**Senza tensore** / No tensor
SUZUKI	1200	GSF Bandit	96-00	AGS50	AGD101	
SUZUKI	1200	GSX	99-01	AGS50	AGD03	
SUZUKI	1250	GSF Bandit	10	AGS113	AGD262	
SUZUKI	1250	GSF Bandit	07-09	AGS113	AGD03	
SUZUKI	1250	GSF Bandit	11-	AGS113	AGD11	
SUZUKI	1250	GSF Bandit S	10	AGS113	AGD262	
SUZUKI	1250	GSF Bandit S	11-	AGS113	AGD11	
SUZUKI	1250	GSX FA	11-	AGS113	AGD11	
SUZUKI	1300	GSX B-King	08-	AGS278	AGD08	
SUZUKI	1300	GSX-R Hayabusa	10-13	AGS113	AGD11	
SUZUKI	1300	GSX-R Hayabusa	99-09	AGS113	AGD03	
SUZUKI	1400	GSX	02-04	AGS113	AGD03	
SUZUKI	1400	GSX	05-07	AGS113	AGD11	

LEVE / levers

INDICE ANALITICO LEVE / levers index

MARCA Brand	CC	MODELLO Model	ANNI Years	LEVA FRIZIONE Clutch Lever	LEVA FRENO Brake Lever	NOTE Notes
SUZUKI	1500	VL Intruder	-98	AGS116	AGD86	
SUZUKI	1500	VL Intruder	98-08	AGS116	AGD101	
SUZUKI	1500	VL Intruder LC	07-	AGS259	AGD264	
SUZUKI	1600	M1600 VZ Intruder	04-05	AGS118	AGD126	
SUZUKI	1800	C1800R VLR Intruder	08-	-	AGD264	
SUZUKI	1800	M1800R VZR Intruder	06-	AGS256	AGD264	
SYM	50	Cinderella	99-02	AGS238	AGD252	
SYM	50	DD	03-08	AGS61	AGD70	
SYM	50	Fiddle II	08-	AGS190	AGD297	
SYM	50	Jet	98-02	AGS238	AGD252	
SYM	50	Jet 4	09-	AGS190	AGD298	
SYM	50	Jet Basix		AGS238	AGD252	
SYM	50	Jet EuroX	03-08	AGS238	AGD252	
SYM	50	Jet EuroX Euro2	03-08	AGS190	AGD298	
SYM	50	Jet Sport X R	06-08	AGS243	AGD255	
SYM	50	Jet Sport X S	06-08	AGS243	AGD255	
SYM	50	Jet Sport X SR	06-08	AGS243	AGD255	
SYM	50	Jungle	98-02	AGS238	AGD252	
SYM	50	Mask	00-06	AGS238	AGD252	
SYM	50	Mio	05-09	AGS239	AGD253	
SYM	50	Orbit	07-	AGS190	AGD297	
SYM	50	Red Devil	99	AGS238	AGD252	
SYM	50	Super Fancy	98-00	AGS238	AGD252	
SYM	50	Symphony	09-	AGS190	AGD297	
SYM	50	Symply	11-	AGS190	AGD297	
SYM	50	Symply II	09-10	AGS190	AGD297	
SYM	100	Cinderella	99	AGS61	AGD252	
SYM	100	Cinderella	00-01	AGS238	AGD252	
SYM	100	Jet	99-00	AGS238	AGD252	
SYM	100	Jet EuroX	03-07	AGS238	AGD252	
SYM	100	Mio	05-09	AGS239	AGD253	
SYM	125	Attila	00-01	AGS245	AGD271	
SYM	125	Citycom	09-	AGS244	AGD257	
SYM	125	Euro MX	03-06	AGS241	AGD254	
SYM	125	Euro MX	00-02	AGS245	AGD258	
SYM	125	Fiddle II	08-	AGS190	AGD297	
SYM	125	GTS	09-11	AGS242	AGD256	
SYM	125	GTS EVO	10	AGS242	AGD256	
SYM	125	GTS EVO EFI	10-	AGS242	AGD256	
SYM	125	GTS Joymax	06-08	AGS243	AGD255	
SYM	125	HD	01-06	AGS240	AGD196	
SYM	125	HD	07-	AGS242	AGD256	
SYM	125	HD Evo GTS	07-	AGS242	AGD256	
SYM	125	HD2 i	11-	AGS242	AGD256	
SYM	125	Jet 4	10-	AGS190	AGD298	
SYM	125	Joymax	06-07	AGS243	AGD255	
SYM	125	Joymax	12-	AGS242	AGD256	
SYM	125	Joymax EFI	12-	AGS242	AGD256	
SYM	125	Joyride	00-07	AGS244	AGD257	
SYM	125	New Duke	00-01	AGS238	AGD252	
SYM	125	Orbit	07-	AGS190	AGD297	
SYM	125	Symphony	10-	AGS305	AGD298	
SYM	125	Symphony S	12-	AGS305	AGD297	
SYM	125	Symphony SR	10-	AGS305	AGD298	
SYM	125	Symply II	10-	AGS190	AGD297	
SYM	125	VS	06-	AGS241	AGD196	
SYM	150	Attila		AGS245	AGD271	
SYM	150	Euro MX	03-06	AGS241	AGD254	
SYM	150	Euro MX	00-02	AGS245	AGD258	
SYM	150	Joyride	00-03	AGS244	AGD257	
SYM	150	Shark	00-02	AGS245	AGD258	

ACCOSSATO

LEVE / levers

INDICE ANALITICO LEVE / levers index

MARCA Brand	CC	MODELLO Model	ANNI Years	LEVA FRIZIONE Clutch Lever	LEVA FRENO Brake Lever	NOTE Notes
SYM	150	VS	06-07	AGS241	AGD196	
SYM	180	Joyride	05-08	AGS244	AGD257	
SYM	200	HD	03-06	AGS240	AGD196	
SYM	200	HD 200EFI Euro3	08-	AGS242	AGD256	
SYM	200	HD Euro3	07-	AGS242	AGD256	
SYM	200	HD2 EFI	11-	AGS242	AGD256	
SYM	200	Joyride	01-03	AGS244	AGD257	
SYM	200	Joyride	03-08	AGS244	AGD257	
SYM	200	Joyride 200i Euro3	08-	AGS244	AGD257	
SYM	250	GTS	06-	AGS243	AGD255	
SYM	250	HD Evo GTS	07-	AGS242	AGD256	
SYM	250	Joymax	06	AGS243	AGD255	
SYM	250	Joymax Euro3	07-	AGS243	AGD255	
SYM	250	Joymax GTS	06-07	AGS243	AGD255	
SYM	300	Citycom	09-	AGS244	AGD257	
SYM	300	GTS	09-	AGS242	AGD256	
SYM	300	Joymax I	12-	AGS242	AGD256	
SYM	400	Maxsym 400i	10-	AGS242	AGD256	
TGB	50	Express	09-	AGS190	AGD196	
TGB	50	Express	09-	AGS191	AGD197	
TGB	50	R50X	09-	AGDS634	AGDS634	
TGB	125	Express	09-	AGS190	AGD196	
TGB	125	Express	09-	AGS191	AGD197	
TGB	125	X-Motion 125	09-	AGS283	AGD290	
TGB	125	X-Motion 125R	09-	AGS283	AGD290	
TGB	250	X-Motion 250EFI	09-	AGS283	AGD290	
TGB	250	X-Motion 250R	09-	AGS283	AGD290	
TGB	300	X-Motion 300EFI	09-	AGS283	AGD290	
TGB	325	Target	09-	AGS283	AGD290	
TM RACING	85	MX		AGS14	AGD93	**Dx forgiata** / R forged
TM RACING	85	MX		AGS211	AGD93	**Dx+Sx forg.** / R+L forged
TM RACING	85	SMX		AGS14	AGD93	**Dx forgiata** / R forged
TM RACING	85	SMX		AGS211	AGD93	**Dx+Sx forg.** / R+L forged
TM RACING	125	EN		AGS14	AGD93	**Dx forgiata** / R forged
TM RACING	125	EN		AGS211	AGD93	**Dx+Sx forg.** / R+L forged
TM RACING	125	MX		AGS14	AGD93	**Dx forgiata** / R forged
TM RACING	125	MX		AGS211	AGD93	**Dx+Sx forg.** / R+L forged
TM RACING	125	SMM Black Dream		AGS211	AGD292	**Sx forgiata** / L forged
TM RACING	125	SMM Black Dream		AGS14	AGD292	
TM RACING	125	SMR		AGS211	AGD292	**Sx forgiata** / L forged
TM RACING	125	SMR		AGS14	AGD292	
TM RACING	144	EN		AGS14	AGD93	**Dx forgiata** / R forged
TM RACING	144	EN		AGS211	AGD93	**Dx+Sx forg.** / R+L forged
TM RACING	144	MX		AGS14	AGD93	**Dx forgiata** / R forged
TM RACING	144	MX		AGS211	AGD93	**Dx+Sx forg.** / R+L forged
TM RACING	250	EN		AGS14	AGD93	**Dx forgiata** / R forged
TM RACING	250	EN		AGS211	AGD93	**Dx+Sx forg.** / R+L forged
TM RACING	250	EN Fi e.s.		AGS14	AGD93	**Dx forgiata** / R forged
TM RACING	250	EN Fi e.s.		AGS211	AGD93	**Dx+Sx forg.** / R+L forged
TM RACING	250	MX		AGS14	AGD93	**Dx forgiata** / R forged
TM RACING	250	MX		AGS211	AGD93	**Dx+Sx forg.** / R+L forged
TM RACING	250	MX Fi		AGS14	AGD93	**Dx forgiata** / R forged
TM RACING	250	MX Fi		AGS211	AGD93	**Dx+Sx forg.** / R+L forged
TM RACING	300	EN		AGS14	AGD93	**Dx forgiata** / R forged
TM RACING	300	EN		AGS211	AGD93	**Dx+Sx forg.** / R+L forged
TM RACING	300	MX		AGS14	AGD93	**Dx forgiata** / R forged
TM RACING	300	MX		AGS211	AGD93	**Dx+Sx forg.** / R+L forged
TM RACING	450	EN Fi e.s.		AGS14	AGD93	**Dx forgiata** / R forged
TM RACING	450	EN Fi e.s.		AGS211	AGD93	**Dx+Sx forg.** / R+L forged
TM RACING	450	MX Fi		AGS14	AGD93	**Dx forgiata** / R forged
TM RACING	450	MX Fi		AGS211	AGD93	**Dx+Sx forg.** / R+L forged

LEVE / levers

INDICE ANALITICO LEVE / levers index

MARCA Brand	**CC**	**MODELLO** Model	**ANNI** Years	**LEVA FRIZIONE** Clutch Lever	**LEVA FRENO** Brake Lever	**NOTE** Notes
TM RACING	**450**	**SMX Fi Competition**		**AGS14**	**AGD93**	**Dx forgiata** / R forged
TM RACING	**450**	**SMX Fi Competition**		**AGS211**	**AGD93**	**Dx+Sx forg.** / R+L forged
TM RACING	**530**	**SMM F Black Dream e.s.**		**AGS168**	**AGD292**	**Sx. corta** / L short
TM RACING	**530**	**SMM F Black Dream e.s.**		**AGS170**	**AGD292**	**Sx lunga** / L long
TM RACING	**530**	**SMM F e.s.**		**AGS168**	**AGD292**	**Sx. corta** / L short
TM RACING	**530**	**SMM F e.s.**		**AGS170**	**AGD292**	**Sx lunga** / L long
TRIUMPH	**600**	**Daytona**	**03-04**	**AGS306**	**AGD03**	
TRIUMPH	**600**	**Speed Four**	**02-05**	**AGS306**	**AGD125**	**Dx. regolabile** / R adjustable
TRIUMPH	**600**	**TT**	**00-03**	**AGS306**	**AGD03**	
TRIUMPH	**675**	**Daytona**	**06-13**	**AGS307**	**AGD08**	
TRIUMPH	**675**	**Daytona R**	**11-13**	**-**	**AGD208**	
TRIUMPH	**675**	**Street Triple**	**07-11**	**AGS307**	**AGD125**	**Dx. regolabile** / R adjustable
TRIUMPH	**675**	**Street Triple**	**12-15**	**AGS307**	**AGD08**	**Dx. regolabile** / R adjustable
TRIUMPH	**750**	**Daytona**	**91-92**	**AGS117**	**AGD20**	
TRIUMPH	**750**	**Trident**	**92-98**	**-**	**AGD125**	**Dx. regolabile** / R adjustable
TRIUMPH	**865**	**America**		**-**	**AGD125**	**Dx. regolabile** / R adjustable
TRIUMPH	**865**	**Bonneville**	**06-10**	**-**	**AGD125**	**Dx. regolabile** / R adjustable
TRIUMPH	**865**	**Bonneville SE**	**06-10**	**-**	**AGD125**	**Dx. regolabile** / R adjustable
TRIUMPH	**865**	**Bonneville T100**	**06-10**	**-**	**AGD125**	**Dx. regolabile** / R adjustable
TRIUMPH	**865**	**Daytona/Super III**	**93-96**	**AGS117**	**AGD20**	
TRIUMPH	**865**	**Scrambler**	**06-10**	**AGS307**	**AGD125**	**Dx. regolabile** / R adjustable
TRIUMPH	**865**	**Speed Triple**	**94-96**	**AGS117**	**AGD20**	
TRIUMPH	**865**	**Speed Triple T509**	**97-98**	**AGS116**	**AGD125**	**Sx+Dx regolab.** / L+R adjuastable
TRIUMPH	**865**	**Speedmaster**	**05-10**	**AGS307**	**AGD125**	**Dx. regolabile** / R adjustable
TRIUMPH	**865**	**Sprint**	**93-98**	**AGS117**	**AGD20**	
TRIUMPH	**865**	**Thruxton**	**04-10**	**AGS307**	**AGD125**	**Dx. regolabile** / R adjustable
TRIUMPH	**865**	**Trident**	**93-98**	**AGS116**	**AGD125**	**Sx+Dx regolab.** / L+R adjuastable
TRIUMPH	**865**	**Trophy**	**91-95**	**-**	**AGD125**	**Dx. regolabile** / R adjustable
TRIUMPH	**900**	**Thruxton**	**03**	**AGS306**	**AGD125**	**Dx. regolabile** / R adjustable
TRIUMPH	**955**	**Daytona**	**02-06**	**AGS306**	**AGD125**	**Dx. regolabile** / R adjustable
TRIUMPH	**955**	**Daytona T595**	**97-01**	**AGS306**	**AGD125**	**Dx. regolabile** / R adjustable
TRIUMPH	**955**	**Speed Triple i**	**99-04**	**AGS306**	**AGD125**	**Dx. regolabile** / R adjustable
TRIUMPH	**955**	**Sprint RS**	**04**	**AGS307**	**AGD125**	**Dx. regolabile** / R adjustable
TRIUMPH	**955**	**Sprint RS**	**00-03**	**AGS306**	**AGD125**	**Dx. regolabile** / R adjustable
TRIUMPH	**955**	**Sprint ST 91864**	**99-04**	**AGS306**	**AGD125**	**Dx. regolabile** / R adjustable
TRIUMPH	**1050**	**Speed Triple**	**05-07**	**AGS307**	**AGD125**	**Dx. regolabile** / R adjustable
TRIUMPH	**1050**	**Speed Triple**	**08-09**	**AGS307**	**AGD08**	
TRIUMPH	**1050**	**Speed Triple**	**10-15**	**AGS307**	**AGD208**	
TRIUMPH	**1050**	**Sprint GT**	**10-**	**-**	**AGD125**	**Dx. regolabile** / R adjustable
TRIUMPH	**1050**	**Tiger**	**07-08**	**AGS307**	**AGD125**	**Dx. regolabile** / R adjustable
TRIUMPH	**1200**	**Daytona**	**93-97**	**AGS117**	**AGD20**	
TRIUMPH	**1200**	**Trophy**	**91-03**	**-**	**AGD125**	**Dx. regolabile** / R adjustable
TRIUMPH	**2265**	**Rocket III**	**04-07**	**AGS307**	**AGD125**	
VECTRIX	**-**	**VX-1**	**08-**	**AGDS633**	**AGDS633**	**Brembo**
VECTRIX	**-**	**VX-1**	**08-**	**AGDS606**	**AGDS606**	**Brembo**
VECTRIX	**-**	**VX-1 Li+**	**10-**	**AGDS633**	**AGDS633**	**Brembo**
VECTRIX	**-**	**VX-1 Li+**	**10-**	**AGDS606**	**AGDS606**	**Brembo**
YAMAHA	**50**	**Axis R**	**96**	**AGS114**	**AGD89**	
YAMAHA	**50**	**BW's**	**04-07**	**AGS64**	**AGD163**	
YAMAHA	**50**	**BW's Bump**	**97-98**	**AGS162**	**AGD172**	
YAMAHA	**50**	**BW's Naked**	**03**	**AGS64**	**AGD233**	
YAMAHA	**50**	**BW's Naked**	**04**	**AGS64**	**AGD163**	
YAMAHA	**50**	**BW's NG**	**01-06**	**AGS64**	**AGD163**	
YAMAHA	**50**	**BW's NG**	**97-99**	**AGS162**	**AGD172**	
YAMAHA	**50**	**BW's NG Cat.**	**99-00**	**AGS158**	**AGD163**	
YAMAHA	**50**	**BW's Original**	**01-02**	**AGS64**	**AGD233**	
YAMAHA	**50**	**BW's Original Euro2**	**02-03**	**AGS64**	**AGD233**	
YAMAHA	**50**	**BW's Original Sport**	**99-00**	**AGS158**	**AGD163**	
YAMAHA	**50**	**BW's R**	**01**	**AGS64**	**AGD233**	
YAMAHA	**50**	**BW's RS 50 Spy**	**95-98**	**AGS162**	**AGD172**	
YAMAHA	**50**	**BW's SP Original**	**02**	**AGS64**	**AGD233**	

ACCOSSATO

LEVE / levers

INDICE ANALITICO LEVE / levers index

MARCA Brand	CC	MODELLO Model	ANNI Years	LEVA FRIZIONE Clutch Lever	LEVA FRENO Brake Lever	NOTE Notes
YAMAHA	50	BW´s	08-	AGS64	AGD163	
YAMAHA	50	CL L BW's	03	AGS64	AGD233	
YAMAHA	50	CS Jog	90-91	AGS127	AGD133	
YAMAHA	50	CS Jog R	02-	AGS64	AGD121	
YAMAHA	50	CS Jog R	96-01	AGS127	AGD202	
YAMAHA	50	CS Jog RR	02-	AGS64	AGD121	
YAMAHA	50	CW L BW's	04	AGS64	AGD163	
YAMAHA	50	DT		AGS31	AGD239	
YAMAHA	50	DT R	03	AGS195	AGD143	
YAMAHA	50	DT R	96	AGS108	AGD43	
YAMAHA	50	DT R	97	AGS182	AGD138	
YAMAHA	50	DT R	04-09	AGS92	AGD234	
YAMAHA	50	DT R	91-95	AGS179	AGDS636	
YAMAHA	50	DT Super Motard	03	AGS195	AGD143	
YAMAHA	50	DT Super Motard	04-09	AGS92	AGD143	
YAMAHA	50	DT X	06-09	AGS92	AGD234	
YAMAHA	50	EW Slider	00-02	AGS64	AGD163	
YAMAHA	50	NS Aerox	13-15	AGDS631	AGDS631	
YAMAHA	50	NS Aerox Naked	13-15	AGDS631	AGDS631	
YAMAHA	50	PW	04-07	AGS127	AGD133	
YAMAHA	50	PW	82-99	AGS127	AGD133	
YAMAHA	50	TZR	03-09	AGS136	AGD142	
YAMAHA	50	TZR	10-15	AGS276	AGD142	
YAMAHA	50	TZR Thunderkid	96-00	AGS131	AGD34	
YAMAHA	50	Yami		AGS145	AGD145	
YAMAHA	50	YH Why	98-06	AGS214	AGD223	
YAMAHA	50	YN F Neo´s 4T	09-	AGS64	AGD185	
YAMAHA	50	YN Neo's 2T	02-06	AGS67	AGD78	
YAMAHA	50	YN Neo's R	97-02	AGS67	AGD78	
YAMAHA	50	YN Neo´s 2T	07-	AGS64	AGD185	
YAMAHA	50	YQ Aerox	09-12	AGDS628	AGDS628	
YAMAHA	50	YQ Aerox	97-08	AGDS603	AGDS603	
YAMAHA	75	RD LC	91	AGS49	AGD60	
YAMAHA	80	DT		AGS198	AGD25	
YAMAHA	80	DT LC	86-88	AGS179	AGDS636	
YAMAHA	80	TZR		AGS182	AGD35	
YAMAHA	80	TZR	87	AGS27	AGD35	
YAMAHA	80	TZR RR	92	AGS131	AGD34	
YAMAHA	80	YZ LC-LW	94	-	AGDS635	
YAMAHA	80	YZ LC-LW	95-97	AGS75	AGD82	
YAMAHA	80	YZ N-LW	01	AGS75	AGD112	
YAMAHA	85	YZ	02-09	AGS75	AGD112	
YAMAHA	90	Jog R	91	AGS127	AGD202	
YAMAHA	100	Bw's	99-01	AGS102	AGD116	
YAMAHA	100	YN Neo's	99-02	AGS67	AGD78	
YAMAHA	100	YQ Aerox	00-02	AGS115	AGD185	
YAMAHA	115	XC S D'elight	14-15	-	AGD317	
YAMAHA	125	DT	95	AGS108	AGD43	
YAMAHA	125	DT	87-89	AGS179	AGDS636	
YAMAHA	125	DT E	89-90	AGS179	AGDS636	
YAMAHA	125	DT E	91-96	AGS108	AGD43	
YAMAHA	125	DT LC	86-87	AGS179	AGDS636	
YAMAHA	125	DT LCF	86	AGS179	AGDS636	
YAMAHA	125	DT LCL	86	AGS179	AGDS636	
YAMAHA	125	DT R	89-92	AGS179	AGDS636	
YAMAHA	125	DT R	91-00	AGS108	AGD43	
YAMAHA	125	DT RE	05-06	AGS75	AGDS635	
YAMAHA	125	DT RE	97-98	AGS108	AGD43	
YAMAHA	125	DT X	05-06	AGS75	AGDS635	
YAMAHA	125	HW Xenter	12-15	AGS308	-	
YAMAHA	125	MT125	14-15	AGS276	AGD76	

LEVE / levers

INDICE ANALITICO LEVE / levers index

MARCA Brand	**CC**	**MODELLO** Model	**ANNI** Years	**LEVA FRIZIONE** Clutch Lever	**LEVA FRENO** Brake Lever	**NOTE** Notes
YAMAHA	125	NXC Cygnus X	04-06	AGS79	AGD88	
YAMAHA	125	NXC Cygnus X	07-11	AGS79	AGD307	
YAMAHA	125	RD LC	86	AGS27	AGD35	
YAMAHA	125	SR	87	AGS49	AGD158	
YAMAHA	125	SR	92-00	AGS20	AGD59	
YAMAHA	125	SR Special	88	AGS49	AGD158	
YAMAHA	125	TDR	89-93	AGS179	-	
YAMAHA	125	TDR R	91-96	AGS109	-	
YAMAHA	125	TW	99-03	AGS75	AGDS635	
YAMAHA	125	TZR	87-90	AGS27	AGD35	
YAMAHA	125	TZR L	90	AGS131	AGD34	
YAMAHA	125	TZR L	87-89	AGS27	AGD35	
YAMAHA	125	TZR R	91-93	AGS131	AGD34	
YAMAHA	125	TZR RR	94-95	AGS131	AGD34	
YAMAHA	125	VP X-City	08-	AGS216	AGD222	
YAMAHA	125	WR R	08-	AGS276	AGD76	
YAMAHA	125	WR X	08-	AGS276	AGD76	
YAMAHA	125	XC Cygnus		AGS80	AGD250	**Tamburo** / Drum
YAMAHA	125	XC Cygnus	96-99	AGS80	AGD89	**Disco**
YAMAHA	125	XC Cygnus K	97	AGS80	AGD89	**Disco**
YAMAHA	125	XC Cygnus R	99-03	AGS80	AGD89	
YAMAHA	125	XC Cygnus T	95-98	AGS80	AGD250	
YAMAHA	125	XC R Majesty S	14-15	AGDS643	AGDS643	
YAMAHA	125	XC R S-Max	14-15	AGDS643	AGDS643	
YAMAHA	125	XQ Maxster	01-02	AGDS606	AGDS606	
YAMAHA	125	XT	88-91	AGS179	-	
YAMAHA	125	XT R	05-	AGS195	AGD143	
YAMAHA	125	XT R	06-	AGS81	AGD143	
YAMAHA	125	XT R	07-	AGS81	AGD234	
YAMAHA	125	XT X	05-	AGS92	AGD143	
YAMAHA	125	XT X	06-	AGS81	AGD143	
YAMAHA	125	XT X	07-	AGS81	AGD234	
YAMAHA	125	XV Virago	97-00	AGS48	AGD59	
YAMAHA	125	XVS Drag Star	00-04	AGS48	AGD59	
YAMAHA	125	YBR	04-10	AGS208	AGD218	
YAMAHA	125	YFA 1S Breeze	04	AGS223	-	
YAMAHA	125	YFA Breeze	02	AGS223	-	
YAMAHA	125	YP Majesty	98-07	AGS44	AGDS606	
YAMAHA	125	YP R X-Max	06-	AGS216	AGD222	
YAMAHA	125	YP R X-Max ABS	10-	AGS216	AGD222	
YAMAHA	125	YP R X-Max ABS Business	10-	AGS216	AGD222	
YAMAHA	125	YW Bw's B-Generation	10-	AGS102	AGD116	
YAMAHA	125	YZ	00-01	AGS97	AGD82	
YAMAHA	125	YZ	02-	AGS130	AGD112	
YAMAHA	125	YZ LC	00-01	AGS97	AGD82	
YAMAHA	125	YZ LC	94-96	AGS75	AGDS635	
YAMAHA	125	YZ LC	97-99	AGS75	AGD82	
YAMAHA	125	YZF-R	08-14	AGS276	AGD76	
YAMAHA	150	Cygnus	92	AGS80	AGD89	**Freno Disco** / Disc Brake
YAMAHA	150	Cygnus E	92	AGS80	AGD89	**Freno Disco** / Disc Brake
YAMAHA	150	Cygnus I	97	AGS80	AGD89	**Freno Disco** / Disc Brake
YAMAHA	150	HW Xenter	12-15	AGS308	-	
YAMAHA	150	Maxter	01-02	AGDS606	AGDS606	
YAMAHA	150	Teo's	01-02	AGS44	AGDS606	
YAMAHA	150	XC Fly One	90-95	AGS80	AGD250	
YAMAHA	150	XC Fly One R	97-98	AGS80	AGD89	
YAMAHA	150	YP Majesty	00-02	AGS44	AGDS606	
YAMAHA	180	YP E Majesty	03-06	AGDS606	AGDS606	
YAMAHA	200	DT 200 R	88-89	AGS179	AGDS636	
YAMAHA	240	TDR	88-99	AGS179	AGDS636	
YAMAHA	250	SR	91-96	AGS49	AGD60	

ACCOSSATO

LEVE / levers

INDICE ANALITICO LEVE / levers index

MARCA Brand	CC	MODELLO Model	ANNI Years	LEVA FRIZIONE Clutch Lever	LEVA FRENO Brake Lever	NOTE Notes
YAMAHA	250	SR Classic	96	AGS49	AGD60	
YAMAHA	250	TDR	88-90	AGS179	AGDS636	
YAMAHA	250	TY S	88	AGS179	AGDS636	
YAMAHA	250	TZ	93-95	-	AGD125	
YAMAHA	250	TZR	87-89	AGS27	AGD35	
YAMAHA	250	VP X-City	07-13	AGS216	AGD222	
YAMAHA	250	WR	95-98	AGS75	AGD82	
YAMAHA	250	WR F	01-04	AGS130	AGD112	
YAMAHA	250	WR F	05-07	AGS212	AGD112	
YAMAHA	250	WR R	08-13	-	AGDS635	
YAMAHA	250	WR X	08-09	-	AGDS635	
YAMAHA	250	XG Tricker	05	-	AGDS635	
YAMAHA	250	XV S Virago	95	AGS48	AGD59	
YAMAHA	250	XV S Virago	97-99	AGS48	AGD59	
YAMAHA	250	XV Virago	95	AGS20	AGD59	
YAMAHA	250	XV Virago	96	-	AGD59	
YAMAHA	250	XV Virago	91-92	-	AGD59	
YAMAHA	250	XVS Drag Star	01-04	AGS48	AGD59	
YAMAHA	250	YBR	07-11	AGS223	-	
YAMAHA	250	YFM BW Big Bear	07	AGS223	AGD235	
YAMAHA	250	YFM XS Bear Tracker	04	AGS223	AGD235	
YAMAHA	250	YP Majesty	00-03	AGS148	AGD204	
YAMAHA	250	YP Majesty	96-98	AGS108	AGD43	
YAMAHA	250	YP Majesty ABS	03	AGS148	AGD204	
YAMAHA	250	YP Majesty DX	98-00	AGS148	AGD204	
YAMAHA	250	YP R X-Max	05-	AGS216	AGD222	
YAMAHA	250	YP R X-Max Black Max	09-	AGS216	AGD222	
YAMAHA	250	YP R X-Max Sport	10-	AGS216	AGD222	
YAMAHA	250	YZ	02-	AGS130	AGD112	
YAMAHA	250	YZ F	01-06	AGS130	AGD112	
YAMAHA	250	YZ F	07-08	AGS130	AGD225	**Dx forgiata** / R forged
YAMAHA	250	YZ F	07-08	AGS130	AGD224	
YAMAHA	250	YZ F	09-	AGS295	AGD225	**Dx+Sx forg.** / R+L forged
YAMAHA	250	YZ F	09-	AGS294	AGD224	
YAMAHA	250	YZ LC	00-01	AGS97	AGD82	
YAMAHA	250	YZ LC	94-99	AGS75	AGD82	
YAMAHA	300	XC Versity		AGDS606	AGDS606	
YAMAHA	320	YZF-R3	15-16	AGS276	-	
YAMAHA	350	RC LC	91	AGS182	AGD138	
YAMAHA	350	RC LC	86-88	AGS182	AGD138	
YAMAHA	350	RD LC	88-91	AGS27	-	
YAMAHA	350	RD LCF	86	-	AGD138	
YAMAHA	350	RD LCF	87-88	AGS182	AGD138	
YAMAHA	350	TT	85-89	-	AGDS635	
YAMAHA	350	TT A	90-95	-	AGDS635	
YAMAHA	350	XT	92	AGDS636	AGDS636	
YAMAHA	350	XT	86-91	AGS179	AGDS636	
YAMAHA	350	YFM AS Bruin 2WD	04	AGS223	AGD235	
YAMAHA	350	YFM FAS Bruin 4WD	04	AGS223	AGD235	
YAMAHA	350	YFM FGW Grizzly 4WD	07	AGS223	AGD235	
YAMAHA	350	YFM GW Grizzly 2WD	07	AGS223	AGD235	
YAMAHA	350	YFM S Warrior 350	04	AGS223	-	
YAMAHA	350	YFM XW Wolverine	07-09	AGS223	AGD235	
YAMAHA	400	FZR RR	90-92	AGS131	AGD125	
YAMAHA	400	WR F	01-02	AGS130	AGD112	
YAMAHA	400	WR F	01-02	AGS130	AGD112	
YAMAHA	400	WR F	99-00	AGS97	AGD82	
YAMAHA	400	XS		AGS207	AGD60	
YAMAHA	400	YFM FAS Kodiak	04	AGS223	AGD235	
YAMAHA	400	YFM FPS Big Bear Pro.	04	AGS223	-	
YAMAHA	400	YFM FW Kodiak	02	AGS223	AGD235	

LEVE / levers

INDICE ANALITICO LEVE / levers index

ACCOSSATO

MARCA Brand	**CC**	**MODELLO** Model	**ANNI** Years	**LEVA FRIZIONE** Clutch Lever	**LEVA FRENO** Brake Lever	**NOTE** Notes
YAMAHA	400	YP Majesty	09-13	AGS280	AGD287	
YAMAHA	400	YP Majesty	04-08	AGS193	AGD198	
YAMAHA	400	YP Majesty ABS	09-13	AGS280	AGD287	
YAMAHA	400	YP Majesty ABS	07-08	AGS193	AGD198	
YAMAHA	400	YP R X-Max	14-15	AGS280	AGDS606	
YAMAHA	400	YZ F	98-99	AGS75	AGD82	
YAMAHA	426	WR F	01-02	AGS130	AGD112	
YAMAHA	426	YZ F	00	AGS97	AGD82	
YAMAHA	426	YZ F	01	AGS130	AGD112	
YAMAHA	450	WR F	03-04	AGS130	AGD112	
YAMAHA	450	WR F	05-07	AGS212	AGD112	
YAMAHA	450	WR F	12-15	-	AGD308	
YAMAHA	450	YFM FGW Grizzly 4WD	07-09	AGS223	AGD235	
YAMAHA	450	YFM FXW Wolverine	07-09	AGS223	AGD235	
YAMAHA	450	YFZ S	03-04	AGS130	AGD213	
YAMAHA	450	YZ F	03-15	AGS130	AGD112	
YAMAHA	500	XP T-Max	01-07	AGS193	AGD198	
YAMAHA	500	XP T-Max	08-11	AGS280	AGD287	
YAMAHA	500	XP T-Max ABS	05-07	AGS193	AGD198	
YAMAHA	500	XP T-Max ABS	08-11	AGS280	AGD287	
YAMAHA	500	XP T-Max Black Max	05-07	AGS193	AGD198	
YAMAHA	500	XP T-Max Night Max	05-07	AGS193	AGD198	
YAMAHA	500	XP T-Max SV	11	AGS280	AGD287	
YAMAHA	500	XP T-Max SV ABS	11	AGS280	AGD287	
YAMAHA	500	XP T-Max White Max	10-11	AGS280	AGD287	
YAMAHA	530	XP T-Max	12-15	AGS280	AGD287	
YAMAHA	530	XP T-Max ABS	12-15	AGS280	AGD287	
YAMAHA	535	XV Virago	89-98	AGS48	AGD59	
YAMAHA	535	XV Virago DX	99-01	AGS48	AGD59	
YAMAHA	535	XV Virago SE	88	AGS48	AGD59	
YAMAHA	550	XT	82-83	AGS109	-	
YAMAHA	600	FDS	89-01	AGS06	AGD136	
YAMAHA	600	FDS S	01	AGS06	AGD136	
YAMAHA	600	FDS SP	00	AGS06	AGD136	
YAMAHA	600	FZ	86-88	AGS27	AGD138	
YAMAHA	600	FZ6	04-10	AGS03	AGD221	
YAMAHA	600	FZ6 Fazer	03	AGS06	AGD03	
YAMAHA	600	FZ6 Fazer	04-10	AGS03	AGD221	
YAMAHA	600	FZ6 Fazer	98-03	AGS06	AGD125	
YAMAHA	600	FZ6 Fazer ABS	06-10	AGS03	AGD221	
YAMAHA	600	FZ6 Fazer S2	08-10	AGS03	AGD221	
YAMAHA	600	FZ6 N	05-06	AGS03	AGD221	
YAMAHA	600	FZ6 S	05-06	AGS03	AGD221	
YAMAHA	600	FZ6 S2	08-	AGS03	AGD221	
YAMAHA	600	FZR	89-93	AGS131	AGD137	
YAMAHA	600	FZR R	94-95	AGS131	AGD125	
YAMAHA	600	SRX	86-87	AGS27	AGD138	
YAMAHA	600	TT N	85-88	-	AGDS635	
YAMAHA	600	TT RE	04	AGS223	AGD118	
YAMAHA	600	TT W	89-92	-	AGDS635	
YAMAHA	600	TTR	98-02	AGS91	AGD118	
YAMAHA	600	XJ	86-91	AGS27	AGD138	
YAMAHA	600	XJ 6 Diversion	09-13	AGS01	AGD221	
YAMAHA	600	XJ N	92-96	AGS06	AGD136	
YAMAHA	600	XJ N	97-02	AGS182	AGD138	
YAMAHA	600	XJ S Diversion	92-96	AGS06	AGD136	
YAMAHA	600	XJ S Diversion	97-02	AGS182	AGD138	
YAMAHA	600	XJ6	09-13	AGS01	AGD221	
YAMAHA	600	XT	83-92	AGS179	AGDS636	
YAMAHA	600	XT E	90-03	AGS179	AGD155	
YAMAHA	600	XT K	91-93	AGS109	AGD155	

ACCOSSATO

LEVE / levers

INDICE ANALITICO LEVE / levers index

MARCA Brand	CC	MODELLO Model	ANNI Years	LEVA FRIZIONE Clutch Lever	LEVA FRENO Brake Lever	NOTE Notes
YAMAHA	600	XT Z Teneré	83-90	AGS179	AGDS636	
YAMAHA	600	YZF R Thunder Cat	96-02	AGS131	AGD125	
YAMAHA	600	YZF-R46	05	AGS03	AGD09	
YAMAHA	600	YZF-R6	05-15	AGS03	AGD09	
YAMAHA	600	YZF-R6	99-04	AGS03	AGD03	
YAMAHA	600	YZF-R6 Ltd Edition	07	AGS03	AGD09	
YAMAHA	650	XVS A Drag Star Classic	98-06	AGS137	AGD124	
YAMAHA	650	XVS Drag Star	97-02	AGS137	AGD137	
YAMAHA	650	XVS V		-	AGD232	
YAMAHA	660	MT-03	05-11	AGS136	AGD221	
YAMAHA	660	SZR	95-97	AGS131	-	
YAMAHA	660	XT R	04-14	AGS179	AGD214	
YAMAHA	660	XT X	04-14	AGS179	AGD214	
YAMAHA	660	XT Z Teneré	08-13	AGS279	AGD221	
YAMAHA	660	XT Z Teneré	91-96	AGS109	AGDS636	
YAMAHA	660	YFM FS Grizzly	04	-	AGD235	
YAMAHA	700	MT-07	14-15	AGS03	AGD221	
YAMAHA	700	YFM RW	07-09	AGS223	-	
YAMAHA	750	FZ	86-91	AGS132	AGD138	
YAMAHA	750	FZR	93	AGS132	AGD138	
YAMAHA	750	FZX	87-91	AGS132	AGD138	
YAMAHA	750	FZX	87-91	AGS182	AGD138	
YAMAHA	750	FZX R	88	AGS132	AGD138	
YAMAHA	750	XJ		AGS21	AGD26	
YAMAHA	750	XT Z Super Teneré	89-95	AGS179	AGDS636	
YAMAHA	750	XV Virago	95-96	AGS48	AGD59	
YAMAHA	750	YZF SP	93-95	AGS116	AGD125	
YAMAHA	750	YZF-R	93-96	AGS116	AGD125	
YAMAHA	750	YZF-R7	99-00	AGS116	AGD03	OW02
YAMAHA	800	Fazer 8	11-15	AGS01	AGD221	
YAMAHA	800	FZ8	11-15	AGS01	AGD221	
YAMAHA	800	FZ8 Fazer	11-15	AGS01	AGD221	
YAMAHA	850	TDM	91-01	AGS06	AGD136	
YAMAHA	850	TRX	96-98	AGS131	AGD125	
YAMAHA	900	MT-09	13-15	AGS03	AGD221	
YAMAHA	900	TDM	02-	AGS06	AGD221	
YAMAHA	900	TDM ABS	05-	AGS06	AGD221	
YAMAHA	900	XJ	86-90	AGS27	AGD138	
YAMAHA	900	XJ F	87-92	AGS27	AGD138	
YAMAHA	900	XJ S	95-96	AGS06	AGD136	
YAMAHA	900	XJ S	97-01	AGS182	AGD138	
YAMAHA	950	XVS A Midnight Star	07-	AGS213	AGD124	
YAMAHA	1000	FZ1	06-09	AGS01	AGD221	
YAMAHA	1000	FZ1 Fazer	06-09	AGS01	AGD221	
YAMAHA	1000	FZ1 Fazer ABS	07-08	AGS01	AGD221	
YAMAHA	1000	FZ1 Fazer S2	08-	AGS03	AGD221	
YAMAHA	1000	FZ1 S2	08-	AGS03	AGD221	
YAMAHA	1000	FZR Exup	89-90	AGS47	AGD34	
YAMAHA	1000	FZR Exup	91-95	AGS47	AGD125	
YAMAHA	1000	FZR Genesis	87-88	AGS132	AGD138	
YAMAHA	1000	FZS Fazer	01-05	AGS01	AGD03	
YAMAHA	1000	FZX	87	AGS132	AGD138	
YAMAHA	1000	GTS	93-	AGS116	AGD125	**Regolabile** / Adjustable
YAMAHA	1000	GTS	93-	AGS47	AGD136	
YAMAHA	1000	GTS A ABS	93-	AGS116	AGD125	**Regolabile** / Adjustable
YAMAHA	1000	GTS A ABS	93-	AGS47	AGD136	
YAMAHA	1000	YZF-R Thunderace	96-00	AGS47	AGD125	
YAMAHA	1000	YZF-R1	09-14	AGS03	AGD09	
YAMAHA	1000	YZF-R1	04-08	AGS01	AGD09	
YAMAHA	1000	YZF-R1	15-16	AGS03	AGD08	
YAMAHA	1000	YZF-R1	98-03	AGS01	AGD01	

LEVE / levers

INDICE ANALITICO LEVE / levers index

MARCA Brand	**CC**	**MODELLO** Model	**ANNI** Years	**LEVA FRIZIONE** Clutch Lever	**LEVA FRENO** Brake Lever	**NOTE** Notes
YAMAHA	1000	YZF-R1SP	06	AGS01	AGD09	
YAMAHA	1100	BT Bulldog	02-06	AGS136	AGD125	
YAMAHA	1100	BT Bulldog	06-	AGS03	AGD221	
YAMAHA	1100	XV	95-98	AGS48	AGD59	
YAMAHA	1100	XVS	99	AGS137	AGD137	
YAMAHA	1100	XVS A Drag Star Classic	00-06	AGS137	AGD124	
YAMAHA	1100	XVS Drag Star	99-02	AGS137	AGD137	
YAMAHA	1200	FJ	92	AGS132	AGD138	
YAMAHA	1200	FJ	86-91	AGS132	AGD138	
YAMAHA	1200	FJ A	91-92	AGS132	AGD138	ABS
YAMAHA	1200	V-Max	86-01	-	AGD137	
YAMAHA	1200	XT Z Super Ténéré	10-13	AGS118	AGD221	
YAMAHA	1200	XT Z Super Ténéré	14-15	AGS118	AGD221	
YAMAHA	1200	XT ZE Super Ténéré	14-15	AGS118	AGD221	
YAMAHA	1300	FJR	01-02	AGS118	AGD03	
YAMAHA	1300	FJR	03-04	AGS118	AGD221	
YAMAHA	1300	FJR A	03-07	AGS118	AGD221	
YAMAHA	1300	FJR A ABS	06-	AGS118	AGD221	
YAMAHA	1300	XJR	02-03	AGS118	AGD03	
YAMAHA	1300	XJR	04-	AGS118	AGD221	
YAMAHA	1300	XJR	99-01	AGS116	AGD125	
YAMAHA	1300	XJR SP	99-01	AGS116	AGD125	
YAMAHA	1300	XVS A Midnight Star	07-	AGS213	AGD124	
YAMAHA	1300	XVZ Royal Star	99-00	AGS103	AGD124	
YAMAHA	1300	XVZ TF Royal Star Venture	00	AGS103	AGD124	
YAMAHA	1600	XV A Wild Star	99-02	AGS213	AGD124	
YAMAHA	1700	MT-01	05-12	AGS118	AGD09	
YAMAHA	1700	MT-01S	09-12	AGS118	AGD09	
YAMAHA	1700	V-Max	09-15	AGS118	AGD09	
YAMAHA	1700	XV Warrior	03-04	AGS213	AGD124	
YAMAHA	1900	XV A Midnight Star	06-	AGS215	AGD220	

ACCOSSATO

LEVE / levers

LEVE FRENO / brake levers

AGD01



AGD02



AGD03



AGD04



AGD05



AGD06



AGD07



AGD08



AGD09



AGD10



AGD11



AGD12



AGD13



AGD14



AGD15



AGD16



AGD17



AGD18



AGD19



AGD20



AGD21



AGD23



AGD24



AGD25



AGD26



AGD27



AGD34



AGD35



AGD37



AGD38



AGD39



AGD40



AGD43



AGD45



AGD46



AGD47



AGD48



AGD49



AGD50



AGD51



AGD52

AGD54

AGD56

AGD57

AGD58

AGD59

AGD60

AGD61

AGD63

AGD64

AGD67

AGD68

AGD69

AGD70

AGD74

AGD75

LEVE / levers

LEVE FRENO / brake levers

ACCOSSATO

AGD76



AGD78



AGD80



AGD82



AGD85



AGD86



AGD87



AGD88



AGD89



AGD91



AGD92



AGD93



AGD94



AGD97



AGD98



AGD99



AGD100



AGD101



AGD102



AGD103



AGD104



AGD105



AGD106



AGD107



AGD108



AGD109



AGD110



AGD111



AGD112



AGD113



AGD114



AGD115



AGD116



AGD117



AGD118



AGD119



AGD120



AGD121



AGD122



AGD123



AGD124

AGD125

AGD126

AGD127

AGD128

AGD129

AGD130

AGD131

AGD132

AGD133

AGD134

AGD135

AGD136

AGD137

AGD138

AGD139

ACCOSSATO

LEVE / levers

LEVE FRENO / brake levers

AGD140



AGD141



AGD142



AGD143



AGD144



AGD145



AGD147



AGD148



AGD149



AGD150



AGD151



AGD152



AGD153



AGD154



AGD155



AGD156



AGD157



AGD158



AGD159



AGD160



AGD161



AGD162



AGD163



AGD164



AGD165



AGD167



AGD168



AGD169



AGD170



AGD171



AGD172



AGD173



AGD174



AGD175



AGD176



AGD177



AGD178



AGD179



AGD180



AGD181



AGD182

AGD183

AGD184

AGD185

AGD186

AGD188

AGD189

AGD190

AGD191

AGD192

AGD193

AGD194

AGD195

AGD196

AGD197

AGD198

LEVE / levers

LEVE FRENO / brake levers

AGD199



AGD200



AGD202



AGD203



AGD204



AGD205



AGD206



AGD207



AGD208



AGD209



AGD210



AGD211



AGD212



AGD213



AGD214



AGD215



AGD216



AGD217



AGD218



AGD219



AGD220



AGD221



AGD222



AGD223



AGD224



AGD225



AGD226



AGD227



AGD228



AGD229



AGD230



AGD231



AGD232



AGD233



AGD234



AGD235



AGD237



AGD238



AGD239



AGD240



AGD241

AGD242

AGD243

AGD244

AGD245

AGD246

AGD247

AGD248

AGD249

AGD250

AGD251

AGD252

AGD253

AGD254

AGD255

AGD256

ACCOSSATO

LEVE / levers

LEVE FRENO / brake levers

AGD257



AGD258



AGD259



AGD260



AGD261



AGD262



AGD263



AGD264



AGD265



AGD266



AGD267



AGD268



AGD269



AGD270



AGD271



AGD272



AGD275



AGD276



AGD277



AGD278



AGD279



AGD280



AGD281



AGD282



AGD285



AGD287



AGD288



AGD289



AGD290



AGD291



AGD292



AGD294



AGD295



AGD296



AGD297



AGD298



AGD299



AGD301



AGD304



AGD305



AGD306

AGD307

AGD308

AGD309

AGD310

AGD314

AGD315

AGD316

AGD317

AGD318

AGD319

AGD320

AGD321

LEVE / levers

LEVE FRIZIONE / clutch levers

ACCOSSATO

AGS01


AGS02


AGS03


AGS04


AGS05


AGS06


AGS07


AGS08


AGS09


AGS10


AGS11


AGS12


AGS13


AGS14


AGS15


AGS16


AGS17


AGS18


AGS19


AGS20


AGS21


AGS23


AGS27


AGS29


AGS30


AGS31


AGS38


AGS39


AGS41


AGS42


AGS43


AGS44


AGS45


AGS46


AGS47


AGS48


AGS49


AGS50


AGS52


AGS53


AGS54

AGS55

AGS56

AGS57

AGS58

AGS61

AGS62

AGS63

AGS64

AGS65

AGS66

AGS67

AGS68

AGS70

AGS71

AGS72

ACCOSSATO

LEVE / levers

LEVE FRIZIONE / clutch levers

AGS74



AGS75



AGS76



AGS77



AGS78



AGS79



AGS80



AGS81



AGS86



AGS87



AGS89



AGS91



AGS92



AGS93



AGS94



AGS95



AGS96



AGS97



AGS100



AGS101



AGS102



AGS103



AGS104



AGS105



AGS106



AGS107



AGS108



AGS109



AGS110



AGS111



AGS112



AGS113



AGS114



AGS115



AGS116



AGS117



AGS118



AGS119



AGS120



AGS121



AGS122

AGS123

AGS124

AGS125

AGS126

AGS127

AGS128

AGS129

AGS130

AGS131

AGS132

AGS133

AGS134

AGS135

AGS136

AGS137

LEVE / levers

LEVE FRIZIONE / clutch levers

ACCOSSATO

AGS138


AGS139


AGS140


AGS141


AGS142


AGS143


AGS144


AGS145


AGS147


AGS148


AGS149


AGS150


AGS151


AGS152


AGS153


AGS154


AGS155


AGS156


AGS157


AGS158


AGS159


AGS160


AGS161


AGS162


AGS163


AGS164


AGS165


AGS166


AGS167


AGS168


AGS169


AGS170


AGS171


AGS172


AGS173


AGS174


AGS175


AGS176


AGS177


AGS178


AGS179

AGS180

AGS181

AGS182

AGS184

AGS185

AGS186

AGS187

AGS188

AGS189

AGS190

AGS191

AGS192

AGS193

AGS194

AGS195

ACCOSSATO

LEVE / levers

LEVE FRIZIONE / clutch levers

AGS196



AGS197



AGS198



AGS199



AGS200



AGS201



AGS202



AGS203



AGS204



AGS205



AGS206



AGS207



AGS208



AGS209



AGS210



AGS211



AGS212



AGS213



AGS214



AGS215



AGS216



AGS217



AGS221



AGS223



AGS224



AGS226



AGS228



AGS229



AGS230



AGS231



AGS232



AGS233



AGS234



AGS235



AGS236



AGS237



AGS238



AGS239



AGS240



AGS241



AGS242

AGS243

AGS244

AGS245

AGS246

AGS247

AGS248

AGS249

AGS250

AGS251

AGS252

AGS253

AGS254

AGS255

AGS256

AGS257

LEVE / levers

LEVE FRIZIONE / clutch levers

AGS258



AGS259



AGS260



AGS261



AGS262



AGS265



AGS266



AGS267



AGS268



AGS269



AGS270



AGS271



AGS272



AGS274



AGS276



AGS277



AGS278



AGS279



AGS280



AGS282



AGS283



AGS284



AGS285



AGS288



AGS289



AGS290



AGS291



AGS292



AGS293



AGS294



AGS295



AGS298



AGS299



AGS300



AGS305



AGS306



AGS307



AGS308



AGS309



ACCOSSATO

LEVE / levers

LEVE FRENO-FRIZIONE / brake-clutch levers

AGDS600



AGDS601



AGDS602



AGDS603



AGDS604



AGDS605



AGDS606



AGDS607



AGDS608



AGDS609



AGDS610



AGDS611



AGDS612



AGDS613



AGDS614



AGDS615



AGDS616



AGDS617



AGDS618



AGDS619



AGDS620



AGDS621



AGDS622



AGDS623



AGDS624



AGDS625



AGDS626



AGDS627



AGDS628



AGDS629



AGDS630



AGDS631



AGDS632



AGDS633



AGDS634



AGDS635



AGDS636



AGDS637



AGDS638



AGDS639



AGDS640

AGDS641

AGDS642

AGDS643

ACCOSSATO

Accossato Racing | AG Distribution
Headquarter Via Don Eugenio Bruno 6 | 10029 Villastellone (TO) Italy
Tel. +39 011 969 6811 | WhatsApp +39 371 172 2064
www.accossato.eu | www.accossato.com | sales@accossato.it